PRO-TURN® 500

Operator's Manual
Manuel de l'utilisateur

GRAVELY

Models

992510 – Pro-Turn 552
(SN 020000 +)

992511 – Pro-Turn 560
(SN 020000 +)

992512 – Pro-Turn 572
(SN 020000 +)

992515 – Pro-Turn 500 MACH ONE
(SN 010000 +)

992519 – Pro-Turn 500 EFI MACH ONE
(SN 010000 +)

992530 – Pro-Turn 560 EFI
(SN 020000 +)

992531 – Pro-Turn 572 EFI
(SN 020000 +)

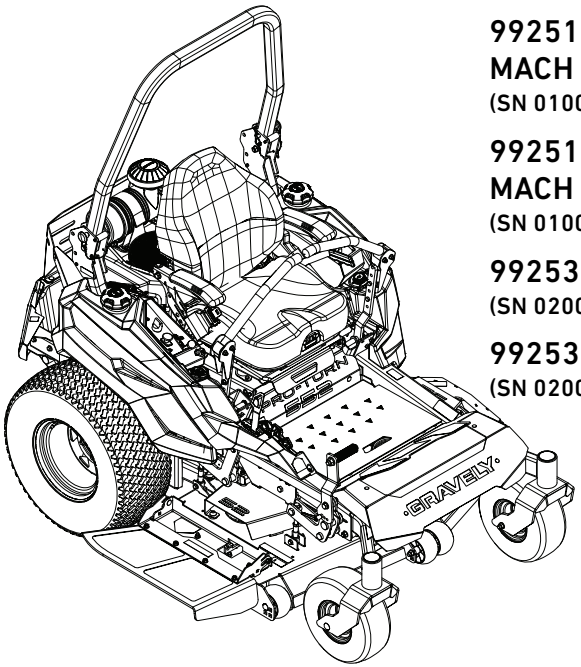

E10 E15 E20 E85

EN ENGLISH

FR FRANÇAIS

30190700A • 12/24
Printed in USA

TABLE OF CONTENTS

WELCOME 1

SAFETY 2

Practices & Laws 2
Emission Control System 2
Required Operator Training 2
Safety Alert Symbol 2
Signal Words 2
Safety Decals 3
Safety Rules 6

ASSEMBLY 12

CONTROLS & FEATURES 15

Ignition Key 17
Choke Control Lever 17
Throttle Control Lever 17
Power Take-off (PTO) Switch 17
Fuel Valve 18
Oil Pressure Warning Light 18
Malfunction Indicator Light 18
Deck Lift Pedal 18
Armrest Angle Adjustment Knobs 18
Height-of-Cut (HOC) Adjustment Dial . . 18
Transport Lock 18
Transport Lock Release Lever 18
Fuel Gauge 19
Hour Meter 19
Steering Levers 19
Rollover Protection Structure (ROPS) . . 19
Transaxle Bypass Valves 19
Anti-scalp Wheels 19
Safety Interlock System 19
Parking Brake Lever 19
Seat Adjustment Lever 20
Seat Height Adjustment Switch 20
Lumbar Support Adjustment Lever 20
Backrest Angle Dial 20

BEFORE OPERATION 20

Position ROPS 20
Adjust Seat 21
Set Cutting Height 22
Open Fuel Valve 23

OPERATION 23

Emergency Stopping 23
Start The Engine 23
Operate Unit 23
Stop the Engine 24
Move Unit Manually 24
Transport Unit 25
Release Transport Lock 25

MAINTENANCE 25

Service Position 25
Maintenance Schedule 26
Service Parts 26
Check Safety Interlock System 27
Check Hydraulic System 27
Check Tire Pressure 28
Check Mower Blades 28
Check Parking Brake 30
Clean Battery 30
Charge Battery 30
Check Fasteners 31
Lubricate Unit 31

SERVICE & ADJUSTMENTS 32

Adjust Transaxles 32
Adjust Parking Brake Interlock 33
Adjust Steering Levers 33
Adjust Unit to Drive Straight 35
Adjust Parking Brake 35
Replace Mower Belts 35
Replace Transaxle Drive Belt 37
Adjust Anti-Scalp Wheels 39
Adjust Deck Lift Pedal 39
Adjust Deck Lift Assist 40
Remove / Install Mower Deck 40
Level and Pitch Mower Deck 41
Adjust Clutch 43

ELECTRICAL SERVICE 43

TROUBLESHOOTING 44

STORAGE 46

Short-Term Storage 46
Long-Term Storage 46
Start-of-Season Preparation 46

ACCESSORIES 46

SPECIFICATIONS 48

WARRANTY 51

WELCOME

Congratulations on your purchase and welcome to the Gravely family! Every machine in the Gravely lineup is designed for long-lasting and unsurpassed performance. We are confident your machine will be part of your family for many years to come.

Have Questions or Need Assistance?
www.gravely.com

A parts manual for your unit is available for free download or purchase at www.gravely.com.
Manual del operador español está disponible para su descarga gratuita o compra en www.gravely.com.

REGISTER YOUR PRODUCT!

It is extremely important to register your product at time of purchase. Product registration activates the warranty and establishes a communication link from AriensCo.

Locate the model and serial number decal on your unit and register those numbers online at www.gravely.com. See Figure 1 for decal location. Be aware that the original selling dealer may have already completed product registration on behalf of the original purchaser.

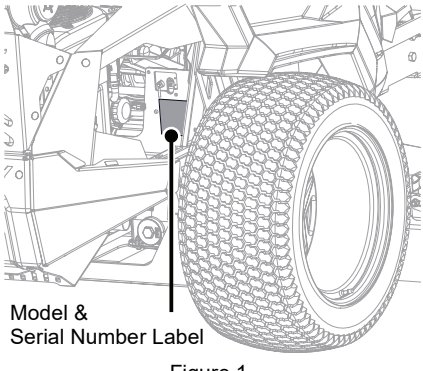

Figure 1

Record model number here.

Record serial number here.

MANUALS

Before operating or servicing the unit, carefully and completely read the manuals provided with the unit. They contain safety instructions and important information about unit controls.

The engine on this unit is covered by a separate manual. Refer to the engine manual for engine service recommendations. Contact the engine manufacturer for a replacement manual if necessary.

Your dealer must review important information in this manual with you before or upon delivery of the unit. It is your responsibility to read and understand all safety precautions and instructions in the manuals. If you do not understand or have difficulty following the instructions, contact your Gravely dealer for assistance. To locate your nearest Gravely dealer, go to www.gravely.com.

DISCLAIMER

Gravely reserves the right to discontinue, make changes to, and add improvements upon its products at any time without public notice or obligation. The descriptions and specifications contained in this manual were in effect at printing. Equipment described in this manual may be optional. Some illustrations may not be applicable to your unit.

© 2024 • AriensCo • Brillion, WI 54110

SAFETY

Read these safety rules and follow them closely. Failure to follow these rules could lead to loss of control of unit, severe personal injury or death to you or bystanders, or result in damage to property or the unit.

PRACTICES & LAWS

Practice usual and customary safe working precautions. Learn applicable rules and laws in your area. ALWAYS follow the practices set forth in this manual.

EMISSION CONTROL SYSTEM

This equipment and/or its engine may include exhaust and evaporative emissions control system components required to meet U.S. Environmental Protection Agency (EPA) and/or California Air Resources Board (CARB) regulations. Tampering with emission controls and components by unauthorized personnel may result in severe fines or penalties. Emission controls and components can only be adjusted by a Gravely dealer or an authorized engine manufacturer's service center. Contact your Gravely Equipment Retailer concerning emission controls and component questions.

REQUIRED OPERATOR TRAINING



Read and understand the Operator's Manual and decals on the unit. This information is for your safety and the proper use of your equipment. Failure to follow these instructions and warnings may cause death or serious injury. If you have purchased this product from a Gravely dealer, the dealer can provide you with training.

Familiarize yourself and any other operators with all controls and the safe use of the features of this unit. If you loan, rent or sell this product to others, provide them with all manuals.

If you have any questions, please call our customer support line at 920-756-4688 or contact us at www.gravely.com. Do not use this equipment if, after reading the Operator's Manual and the on-board decals, you have any questions about the safe use of this product.



WARNING: AVOID INJURY. This cutting machine is capable of amputating body parts and throwing objects. Failure to observe the safety instructions in the manuals and on decals could result in serious injury or death.

ALWAYS disengage blades, stop unit and engine, remove key, set parking brake and allow moving parts to stop before leaving operator's position.

SAFETY ALERT SYMBOL



This is the safety alert symbol. It means:

- **ATTENTION!**
- **YOUR SAFETY IS INVOLVED!**

When you see this symbol:

- **BECOME ALERT!**
- **OBEY THE MESSAGE!**

SIGNAL WORDS

The safety alert symbol above and signal words below are used on decals and in this manual. Read and understand all safety messages.

1. Danger



DANGER: Indicates an IMMINENTLY HAZARDOUS SITUATION! If not avoided, WILL RESULT in death or serious injury.

2. Warning



WARNING: Indicates a POTENTIALLY HAZARDOUS SITUATION! If not avoided, COULD RESULT in death or serious injury.

3. Caution



CAUTION: Indicates a POTENTIALLY HAZARDOUS SITUATION! If not avoided, MAY RESULT in minor or moderate injury. It may also be used to alert against unsafe practices.

4. Notice

NOTICE: Indicates information or procedures that are considered important but not hazard related. If not followed, property damage could result.

5. Important

IMPORTANT: Indicates general reference information worthy of special attention.

SAFETY DECALS

The safety decals on your unit are visual reminders of the important safety information in this manual. All messages on your unit must be fully understood and carefully followed. Safety decals on the unit are explained below.

ALWAYS replace missing or damaged safety decals. Replacement decal information is in the parts manual for your unit. Decals can be ordered from your dealer.

See Figure 2 for safety decal locations.

Safety Decal Locations

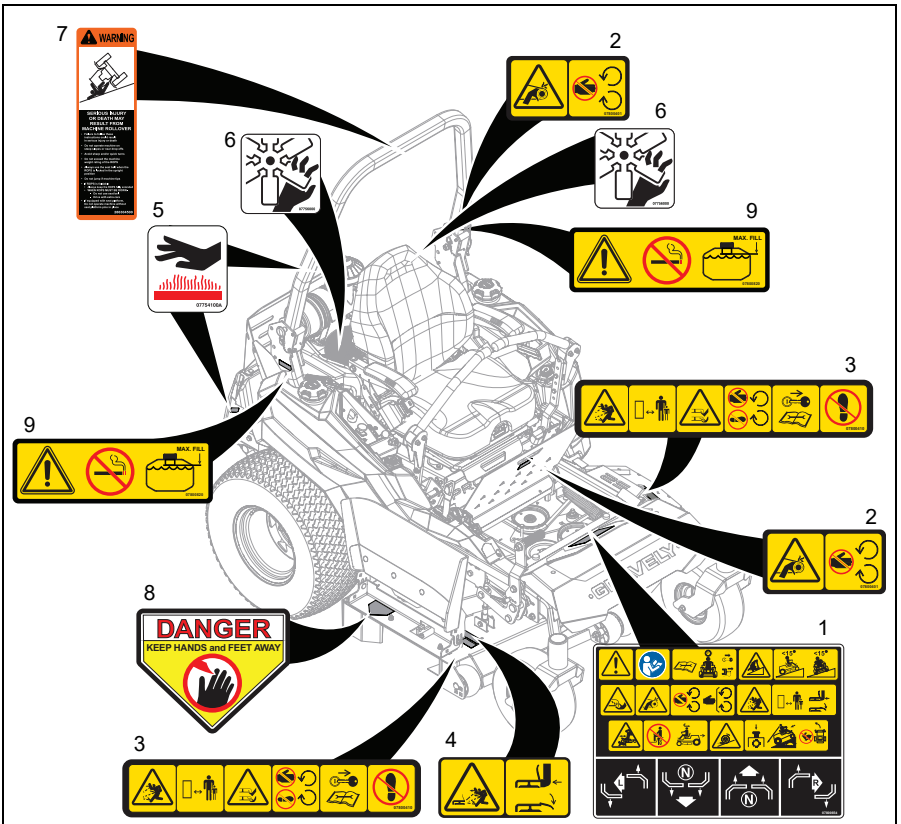

Figure 2

Safety Decal Descriptions

1. DANGER!



DANGER!



Read Operator's Manual.

1. Amputation Hazard



To avoid amputation hazard, DO NOT put hands near rotating blades.



To avoid amputation hazard, DO NOT put hands near moving belts.



Keep hands away from all rotating or moving parts.



Keep all guards and shields in place.

1. Discharge Hazard



NEVER direct discharge toward people, pets or property. Thrown objects can cause injury or damage.



Keep children and others away from unit while unit is in operation.



DO NOT operate mower unless all guards are in operating position or bagger is attached.

1. Tipping Hazard



Avoid tipping hazard.



DO NOT operate on slopes over 15°.



DO NOT operate on slopes over 15°.

1. Service Hazard



Before servicing unit, do the following:



Read Operator's Manual before servicing or making adjustments to unit.



Set parking brake.

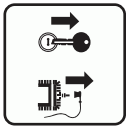

Remove key and disconnect spark plug before servicing or making adjustments to unit.

1. Bystander Hazard



DO NOT operate the unit in the presence of bystanders.



DO NOT carry passengers.



Look behind when operating the unit in reverse.

1. Loss of Traction Hazard



If loss of traction is experienced do the following:

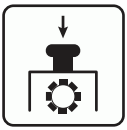

Disengage PTO.



Look before backing. Proceed off slope slowly.



DO NOT try to turn or speed up.

2. DANGER!



Discharge Hazard – NEVER operate unit without discharge chute in operating position. Thrown objects can cause injury or damage.



Keep hands away from all rotating or moving parts.

3. DANGER!



Discharge Hazard – NEVER direct discharge toward people, pets or property. Thrown objects can cause injury or damage.



Amputation Hazard – NEVER stick hands or feet under deck or shielded areas.



Stop engine, remove key, and read manual before servicing or making adjustments to unit.



Keep children and others away from unit while unit is in operation.



Keep hands and feet away from all rotating or moving parts.



DO NOT step or stand in this area.

4. DANGER!



Discharge Hazard – NEVER operate unit without discharge chute in operating position. Thrown objects can cause injury or damage.

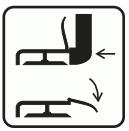

DO NOT operate mower unless all guards are in operating position or bagger is attached.

5. HOT SURFACES!



DO NOT touch parts which are hot from operation. ALWAYS allow parts to cool.

6. ROTATING PARTS!



AVOID INJURY. Stay clear of rotating parts.

7. WARNING!



SERIOUS INJURY OR DEATH may result from machine rollover.

- Failure to follow these instructions could result in serious injury or death.
- DO NOT operate machine on steep slopes or near drop offs.
- Avoid sharp and/or quick turns.
- DO NOT exceed the machine weight rating of the ROPS.
- ALWAYS use the seat belt when the ROPS is locked in the upright position.
- DO NOT jump if machine tips.
- If ROPS is foldable:
  - — ALWAYS keep the ROPS fully extended.
  - — WHEN ROPS MUST BE DOWN:
    - DO NOT use seat belt.
    - Drive with extra care.
- If equipped with seat platform:
  - — DO NOT operate machine without seat platform pins in place or locks engaged.

ROLLOVER PROTECTIVE STRUCTURE

To maintain operator protection and roll bar certification:

- Replace a damaged roll bar, DO NOT attempt to repair or modify.
- Any alteration of the roll bar must be approved by the manufacturer.
- DO NOT exceed the machine weight rating of the roll bar.

8. DANGER!



Keep hands and feet away from all rotating or moving parts.

9. WARNING!



Overfilling may cause severe damage to evaporative system.

NEVER fill fuel tank when engine is running, hot, or unit is indoors.

Replace fuel cap securely and clean up spilled fuel.



No smoking.

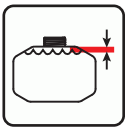

Fill fuel tank to bottom of filler neck – MAXIMUM.

SAFETY RULES

The following safety instructions are based on the B71.4 specifications of the American National Standards Institute and ISO 5395 in effect at the time of production.

Training
Read, understand and follow all instructions on the machine and in the manual(s) before operating this unit.
Keep the area of operation clear of all persons, particularly small children. Be alert and shut off unit if children enter area.
ALWAYS remove key and/or wire from spark plug before assembly, maintenance or service. Unintentional engine start up can cause death or serious injury.
Complete a walk-around inspection of the unit to understand the unit, your work area and all safety decals.
Understand: • How to operate all controls • The functions of all controls • How to STOP in an emergency • Braking and steering characteristics • Turning radius and clearances If the operator or the mechanic cannot read the manual, it is the owner's responsibility to explain it to them.

Only allow responsible adults, who are familiar with the instructions, to operate this machine.

ALWAYS train any inexperienced operators and require them to read and understand all manuals and decals.

Only the user can prevent and is responsible for accidents or injuries occurring to themselves, other people or property.

Operator Age

DO NOT allow children under the age of 18 to operate outdoor power equipment.

Local regulations may restrict the age of the operator.

Data indicates operators above age 60 are involved in a large percentage of riding mower-related injuries.

These operators should evaluate their ability to operate the riding mower safely enough to protect themselves and others from serious injury.

Children

Tragic accidents can occur if the operator is not alert to the presence of children.

Children are often attracted to the machine and the mowing activity. NEVER assume that children will remain where you last saw them.

Be alert and turn machine off if a child enters the area.

Before and while backing, look behind and down for small children.

NEVER carry children, even with the blade(s) shut off. They may fall off and be seriously injured or interfere with safe machine operation. Children who have been given rides in the past may suddenly appear in the mowing area for another ride and be run over or backed over by the machine.

NEVER allow children to operate the machine.

Use extreme care when approaching blind corners, shrubs, trees, or other objects that may block your view of a child.

Keep children out of the mowing area and in the watchful care of a responsible adult other than the operator.

Personal Protection

DO NOT wear loose clothing or jewelry and tie back hair that may get caught in rotating parts.

Wear adequate outer garments.

NEVER wear open sandals or canvas shoes during operation. Wear adequate safety gear, protective gloves and footwear.

Wear proper footwear to improve footing on slippery surfaces.

ALWAYS wear eye and ear protection when operating machine.

Before Operation

Keep all nuts and bolts tight to be sure the equipment is in safe working condition.

Maintain the machine to be in compliance with the maintenance schedule.

Clean grass and debris from unit, especially from around muffler and engine, to help prevent fires.

Check parking brake operation frequently. Adjust and service as required.

Inspect unit before each use for missing or damaged decals and shields, correctly operating safety interlock system, and deterioration of grass catchers. Replace or repair as needed.

Ensure Safety Interlock System is functioning properly. DO NOT operate unit if safety interlock is damaged or disabled.

Start and operate unit only when seated in operator's position. Steering control levers must be in neutral, PTO disengaged and parking brake set when starting engine.

NEVER tamper with safety devices. Check their proper operation regularly.

Keep machine free of grass, leaves, or other debris build-up. Clean up oil or fuel spillage and remove any fuel-soaked debris.

Operation

Be sure the area is clear of bystanders before operating. Stop machine if anyone enters the area.

NEVER operate machine in a closed or poorly ventilated area.

ALWAYS maintain unit in safe operating condition. Damaged or worn out muffler can cause fire or explosion.

This product is equipped with an internal combustion type engine. DO NOT use unit on or near any unimproved, forest-covered or brush covered land unless exhaust system is equipped with a spark arrester meeting applicable local, state or federal laws. A spark arrester, if it is used, must be maintained in effective working order by operator.
DO NOT operate machine while feeling tired, ill or under the influence of alcohol or other drugs.
DO NOT put hands or feet near rotating parts or under the machine. Keep clear of the discharge opening at all times.
DO NOT touch parts which are hot. Allow parts to cool.
DO NOT operate machine without the entire grass catcher, discharge guard, or other safety devices in place and working.
ALWAYS keep hands and feet away from all pinch points.
Avoid slippery surfaces. ALWAYS be sure of your footing.
NEVER carry passengers.
NEVER direct discharged material toward anyone. Avoid discharging material against a wall or obstruction. Material may ricochet back toward the operator. Stop the blade(s) when crossing gravel surfaces.
NEVER engage PTO when attachment, including mower blades, is not in use. ALWAYS turn off power to attachment when not in active use such as traveling or crossing driveways.
ALWAYS disengage PTO, stop unit and engine, remove key, engage parking brake and allow moving parts to stop before leaving operator's position.
NEVER engage PTO while raising the attachment, including mower blades, or when attachment is in the raised position.
Keep safety devices or guards in place and functioning properly. NEVER modify or remove safety devices.
DO NOT mow in reverse unless absolutely necessary. ALWAYS look down and behind before and while backing.
Stop engine before removing grass catcher or unclogging chute.
Slow down before turning.
If you strike a foreign object, stop and inspect the machine. Repair, if necessary, before restarting.
NEVER leave a running machine unattended. ALWAYS turn off blade(s), set parking brake, stop engine and remove key before dismounting.
Disengage blade(s) when not mowing. Shut off engine and wait for all parts to come to a complete stop before cleaning the machine, removing the grass catcher, or unclogging the discharge guard.

Operation Conditions
Lightning can cause severe injury or death. If lightning is seen or thunder is heard in the area, do not operate the machine; seek shelter.
ALWAYS check overhead and side clearances carefully before operation.
Watch for traffic when operating near or crossing roadways.
Clear the area of objects such as rocks, wire, toys, etc., which could be thrown by the blades.
Check for weak spots on docks, ramps or floors. Avoid uneven work areas and rough terrain. Stay alert for hidden hazards or traffic.
Use care when approaching blind corners, shrubs, trees or other objects that may obscure vision.
Dust, smoke, fog, etc. can reduce vision and cause an accident.
Operate machine only in daylight or good artificial light.

Slope Operation
Slopes are a major factor related to loss of control and tip-over accidents, which can result in severe injury or death. Operation on all slopes requires extra caution. If you cannot back up the slope or if you feel uneasy on it, DO NOT mow it.
DO NOT operate on slopes of more than 15°.
Mow up and down slopes, not across.
Watch for holes, ruts, bumps, rocks, or other hidden objects. Uneven terrain could overturn the machine. Tall grass can hide obstacles.
DO NOT mow on moist or wet grass. Tires may lose traction causing a loss of control.

Use extra care while operating machine with grass catchers or other attachments; they can affect the stability of the machine. DO NOT use on steep slopes.

Keep all movements on the slope *slow* and *gradual*. DO NOT make sudden changes in speed or direction, which could cause the machine to roll over.

Avoid starting, stopping, or turning on a slope. If the tires lose traction, disengage the blade(s) and proceed slowly straight down the slope.

Operation on slopes may lead to loss of steering control. When operating on slopes be prepared to react to an emergency situation:

- Return steering levers to neutral position.
- Immediately set parking brake.
- Turn off PTO and engine.

DO NOT try to stabilize the machine by putting your foot on the ground.

DO NOT park on slopes unless necessary. When parking on slope, ALWAYS chock or block wheels. ALWAYS set parking brake.

Choose a low ground speed so you will not have to stop or shift while on a slope.

DO NOT operate near drop-offs, ditches, or embankments. Unit can suddenly turn over if a wheel is over the edge of a cliff or ditch, or if an edge caves in.

DO NOT bypass transmission or allow transmission to free-wheel when on a slope.

Fuel

To avoid personal injury or property damage, use extreme care in handling gasoline. Gasoline is extremely flammable and the vapors are explosive.

Ethanol blends must not exceed E10. Higher ethanol content may cause your machine to run hotter and damage your engine.

Replace fuel cap securely and clean up spilled fuel before starting engine.

Extinguish all cigarettes, cigars, pipes, and other sources of ignition.

Use only an approved gasoline container.

NEVER store the machine or fuel container where there is an open flame, spark, or pilot light such as on a water or space heater or other appliances.

NEVER fill containers inside a vehicle or on a truck or trailer bed with a plastic liner. ALWAYS place containers on the ground away from your vehicle before filling.

NEVER fuel the machine indoors.

NEVER remove gas cap or add fuel with the engine running. Allow engine to cool before fueling.

Fuel is highly flammable and its vapors are explosive. Handle with care. Use only an approved gasoline container with an appropriately sized dispensing spout.

NO smoking, NO sparks, NO flames.

Remove gas-powered equipment from the trailer and refuel it on the ground. If this is not possible, then refuel such equipment with a portable container, rather than from a gasoline dispenser nozzle.

Keep the nozzle in contact with the rim of the fuel tank or container opening at all times until the fueling is complete. DO NOT use a nozzle lock-open device.

NEVER overfill fuel tank. Replace gas cap and tighten securely.

If fuel is spilled on clothing, change clothing immediately.

Towing/Transporting

Follow the manufacturer's recommendations for weight limits for towed equipment and towing on slopes.

NEVER allow children or others in or on towed equipment.

Tow only with a machine that has a hitch designed for towing. DO NOT attach towed equipment except at the hitch point.

On slopes, the weight of the towed equipment may cause loss of control.

Travel slowly and allow extra distance to stop.

Accessories

Use only attachments recommended by AriensCo that are appropriate to your use and can be used safely in your application.

Follow the manufacturer's recommendation for wheel weights or counterweights

Check grass catcher components and the discharge guard frequently and replace with the manufacturer's recommended parts, when necessary.

Batteries
Avoid Electric Shock. Objects contacting both battery terminals at the same time may result in injury and unit damage. DO NOT reverse battery connections.
Reverse connections may result in sparks which can cause serious injury. ALWAYS connect positive (+) lead of charger to positive (+) terminal, and negative (-) lead to negative (-) terminal.
ALWAYS disconnect negative (-) cable FIRST and positive (+) cable SECOND. ALWAYS connect positive (+) cable FIRST, and negative (-) cable SECOND.
Explosive Gases from battery can cause death or serious injury. Poisonous battery fluid contains sulfuric acid and its contact with skin, eyes or clothing can cause severe chemical burns.
No flames, No sparks, No smoking near battery.
ALWAYS wear safety glasses and protective gear near battery. Use insulated tools.
ALWAYS keep batteries out of reach of children.
Battery posts, terminals and related accessories contain lead and lead compounds, chemicals known to the State of California to cause cancer and reproductive harm. Wash hands after handling.

Rollover Protection System (ROPS)
Frequently inspect ROPS and seat belt for damage or loose hardware.
Use extreme care when working close to fences, ditches, or on hills.
Check overhead clearance carefully before driving under any objects.
ALWAYS wear seat belt while operating the unit with the ROPS in the upright position.
Only lower ROPS for transport.
DO NOT wear a seat belt while operating the unit with the center bar in the lowered position.
DO NOT weld, cut, drill or modify ROPS in any manner unless instructed by the manufacturer.

Service
The use of non-genuine replacement parts or accessories could adversely affect machine operation and safety.
Do not change engine governor setting or overspeed the engine.
Maintain or replace safety and instruction labels, as necessary.
Keep unit free of debris. Clean up oil or fuel spills.
ALWAYS block wheels and know all jack stands are strong and secure and will hold weight of unit during maintenance.
Release any pneumatic or hydraulic pressure from components slowly.
NEVER attempt to make any adjustments to unit while engine is running (except where specifically recommended). Stop engine, remove key or spark plug wire and wait for all moving parts to stop before servicing or cleaning.
Lower cutting deck unless a positive mechanical lock is used.
Allow engine to cool before servicing.
Moving parts can cut or amputate fingers or a hand. On multiblade mowers, rotation of one blade will cause all blades to rotate.
NEVER weld or straighten mower blades.
NEVER make adjustments or repairs with the engine running.
Mower blades are sharp. Wrap the blade or wear gloves, and use extra caution when servicing them.
ALWAYS keep body and hands away from pin holes or nozzles which eject hydraulic fluid under pressure.
Foreign fluid, such as hydraulic fluid, injected into body can result in gangrene. Fluid must be surgically removed within a few hours by a doctor familiar with this form of injury.

Transporting Unit
Use extra care when loading or unloading the machine into a trailer.
Secure unit chassis to transport vehicle. NEVER secure from rods or linkages that could be damaged.
DO NOT transport machine while engine is running.
ALWAYS turn off power to attachment and shut off fuel when transporting unit.

Storage
NEVER store unit with fuel in fuel tank, inside a building where any ignition sources are present.
Keep machine free of grass, leaves, or other debris build-up. Clean up oil or fuel spillage and remove any fuel-soaked debris. Allow machine to cool before storing.
For extended storage, shut off fuel and clean unit thoroughly. See engine manual for proper storage.

ASSEMBLY

WARNING: Read and understand the *Safety* section before proceeding.

1. Remove wrap and packaging materials from unit.
2. Remove unit from shipping container. See *Move Unit Manually* on page 24.
3. Remove hardware from negative (-) battery cable, but DO NOT discard.
4. Secure negative (-) battery cable to negative (-) battery terminal with hardware removed in step 3.
5. Lift discharge chute up slightly and rotate to operating position. See Figure 3.

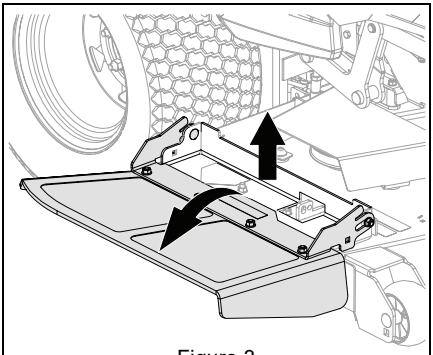

Figure 3

6. Remove and retain one rubber bushing and one pin from each side of ROPS. See Figure 4.

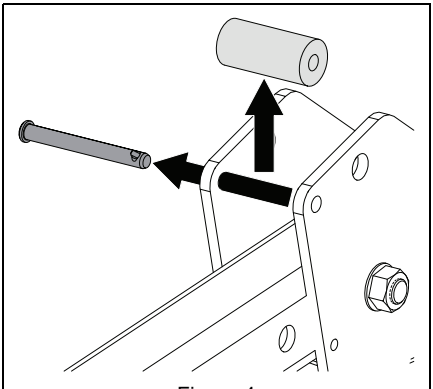

Figure 4

See Figure 5.

7. Rotate ROPS to operating position and secure with lock pins.
8. Reinstall rubber bushings and pins.
9. Secure lock pins with hairpins.

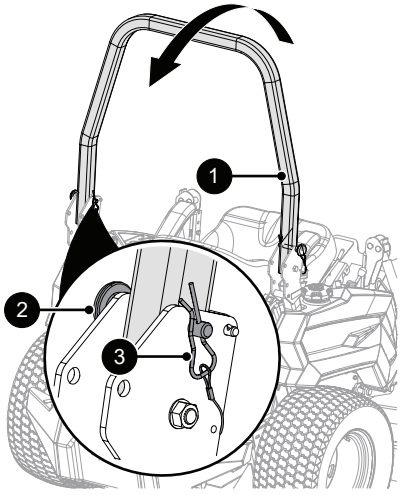

1. ROPS
2. Lock Pin
3. Hairpin

Figure 5

10. Secure lanyard to ROPS using tapping screws from literature pack. See Figure 6.

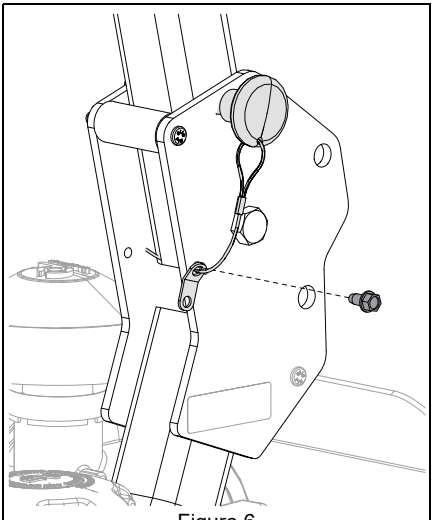

Figure 6

11. Remove and retain hardware securing seat to seat bracket. Repeat on opposite side of unit. See Figure 7.

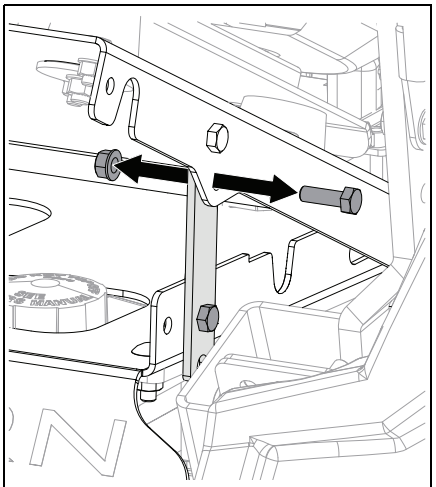

Figure 7

12. Slide seat rearward to the operating position. See Figure 8.

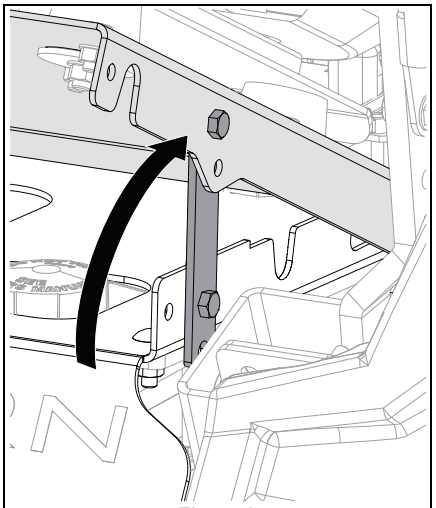

Figure 8

See Figure 9.

13. Reinstall hardware removed in step 11 into front seat plate holes.
14. Tighten hardware.

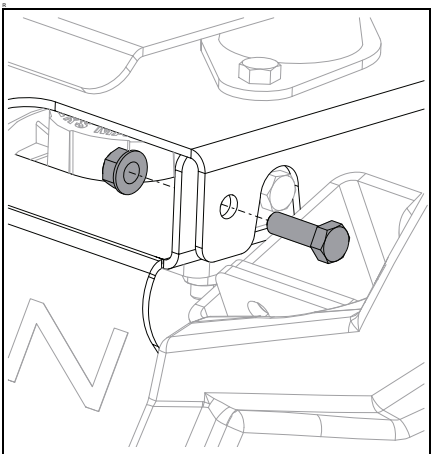

Figure 9

15. Remove two eccentric spacers, two round head square neck bolts and two locking nuts from the mounting holes.

16. Rotate steering levers to operating position and install eccentric spacer between steering lever plates. Secure with hardware. See Figure 10.

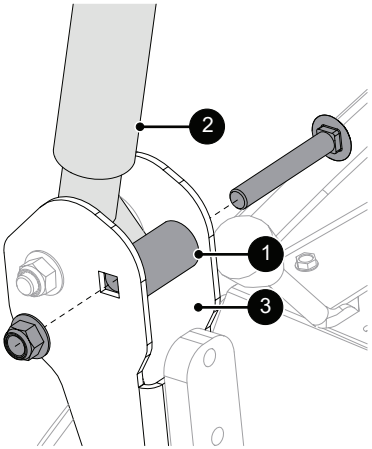

1. Eccentric Spacer
2. Steering Lever
3. Steering Lever Plate

Figure 10

17. Adjust steering levers. See *Adjust Steering Levers* on page 33.
18. Check hydraulic fluid level and add oil if needed. See *Service Parts* on page 26.
19. Check tire pressures and inflate to recommendation. See *Check Tire Pressure* on page 28 and *Specifications on page 48*.
20. Make sure deck is level. See *Level and Pitch Mower Deck* on page 41.
21. Ensure all hardware is tight.
22. Ensure all guards are in place and securely fastened.

CONTROLS & FEATURES

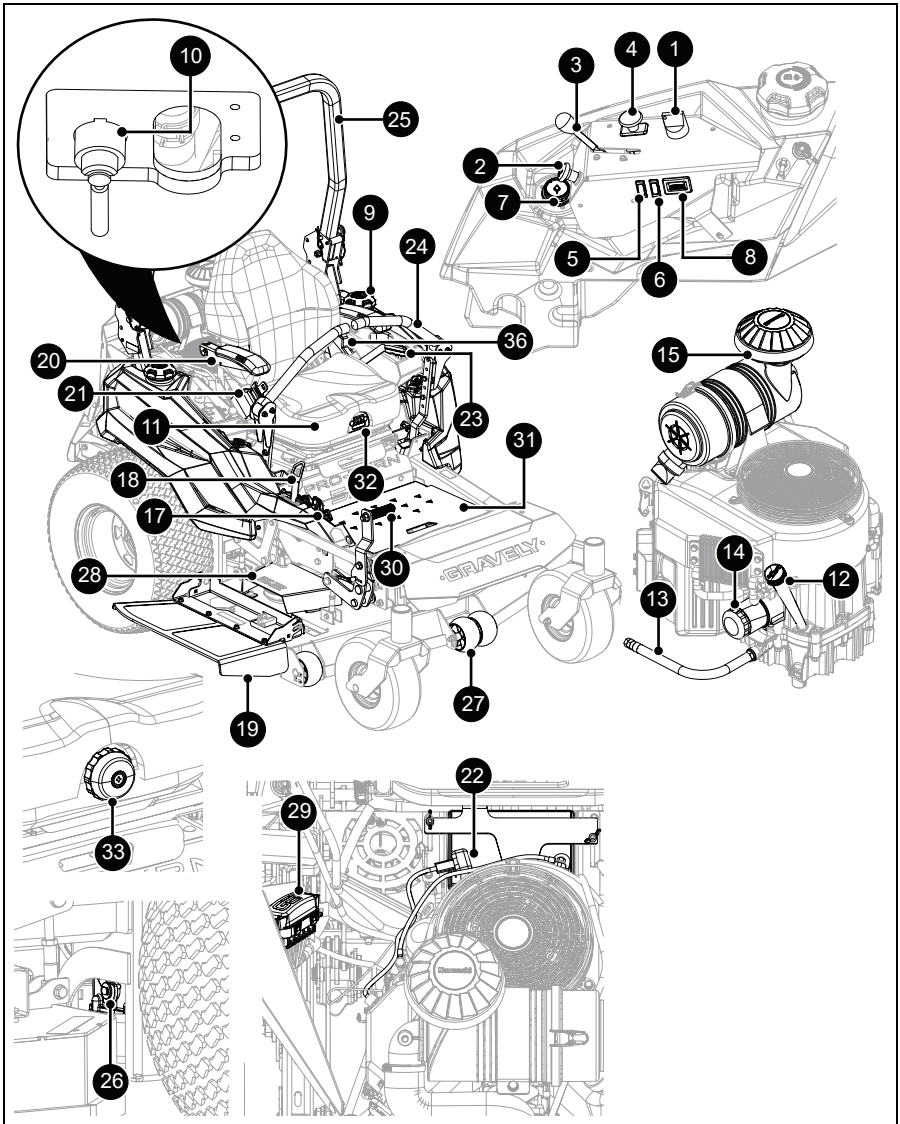

Figure 11

1. Ignition Key
2. Choke Control Lever (Models 992510, 992511, 992512, 992515)
3. Throttle Control Lever
4. Power Take-off (PTO) Switch
5. Oil Pressure Warning Light
6. Malfunction Indicator Light (Models 992519, 992530, 992531)
7. Fuel Guage (2)
8. Hour Meter
9. Fuel Tank and Cap (2)
10. Fuel Valve
11. Hydraulic Oil Expansion Tank (Below Seat)
12. Oil Fill / Dipstick
13. Oil Drain
14. Engine Oil Filter
15. Air Filter
16. Deck Lift Pedal
17. Height-of-Cut (HOC) Adjustment Dial
18. Transport Lock Release Lever
19. Flip-up Discharge Chute
20. Armrest Angle Adjustment Knob (2)
21. Seatbelt
22. Battery (Behind Seat)
23. Parking Brake Lever
24. Steering Lever (2)
25. Rollover Protection Structure (ROPS)
26. Transaxle Bypass Valve (2)
27. Anti-Scalp Wheel (6)
28. Tool-less Belt Cover
29. Fuse Box
30. Adjustable Foot Pedal Lever
31. Footrest / Access Panel
32. Seat Height Adjustment Switch (Models 992510, 992511, 992512, 992530, 992531)
33. Seat Height Adjustment Dial (Models 992515, 992519)
34. Seat Adjustment Lever
35. Lumbar Support Adjustment Lever
36. Backrest Angle Dial

WARNING: AVOID INJURY. Read and understand the *Safety* section before proceeding.

See Figure 11 for all controls and features locations.

IGNITION KEY

See Figure 12.

Controls power to the engine. The key cannot be removed when in on position.

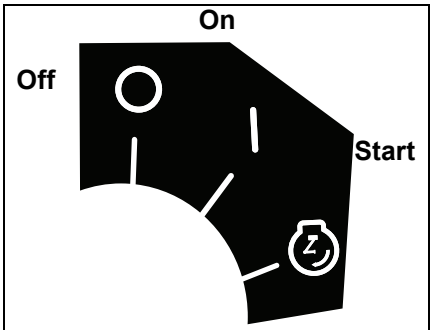

Figure 12

CHOKE CONTROL LEVER

Models 992510, 992511, 992512, 992515

See Figure 13.

Controls air intake to the engine.

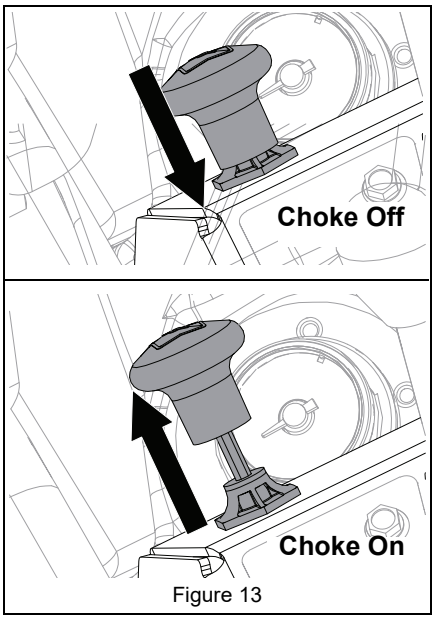

Figure 13

THROTTLE CONTROL LEVER

See Figure 14.

Controls engine speed.

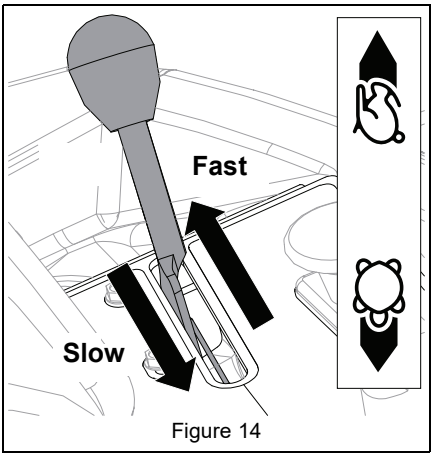

Figure 14

POWER TAKE-OFF (PTO) SWITCH

See Figure 15.

Controls power to mower blades. The engine will not start with the PTO switch in the on position.

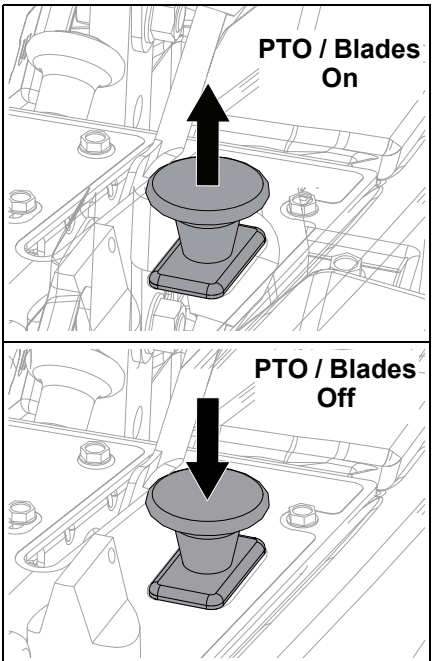

Figure 15

FUEL VALVE

See Figure 16.

Controls fuel flow to the engine. Directs fuel from left or right fuel tank or stops all fuel flow.

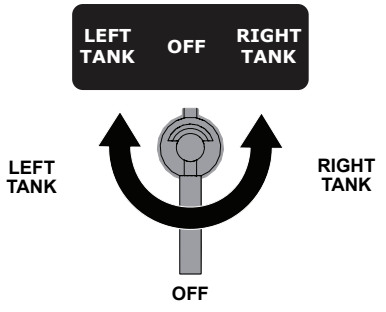

Figure 16

OIL PRESSURE WARNING LIGHT

See Figure 17.

Illuminates when oil pressure is low. Stop engine immediately and refer to engine manual.



Figure 17

MALFUNCTION INDICATOR LIGHT

Models 992519, 992530, 992531

Illuminates when an engine-related problem occurs. Stop engine immediately and refer to engine manual.

DECK LIFT PEDAL

Raises mower deck to unlock height-of-cut dial and adjust setting.

ARMREST ANGLE ADJUSTMENT KNOBS

Set armrest angle for operator comfort.

HEIGHT-OF-CUT (HOC) ADJUSTMENT DIAL

See Figure 18.

Sets the height of cut.

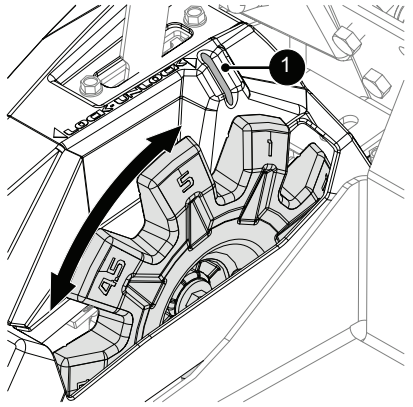

1. HOC Setting Indicator

Figure 18

TRANSPORT LOCK

Locks mower deck in the highest position for transporting or moving unit from one work area to another. See *Transport Unit* on page 25.

TRANSPORT LOCK RELEASE LEVER

See Figure 19.

Releases deck from transport lock position. Transport lock will not engage with transport lock release lever in rear position.

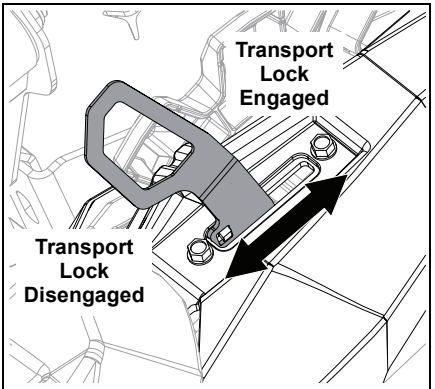

Figure 19

FUEL GAUGE

See Figure 20.

Measures and displays amount of fuel in fuel tanks.

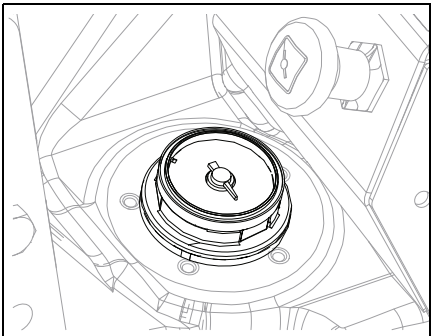

Figure 20

HOUR METER

See Figure 21.

Measures and displays engine runtime.

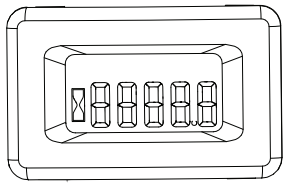

Figure 21

STEERING LEVERS

Control the direction and speed of unit. To stop unit, return both steering levers to neutral.

ROLLOVER PROTECTION STRUCTURE (ROPS)

Help protect operator that is wearing their seatbelt in the event of a rollover. DO NOT wear seatbelt when operating with ROPS in the lowered position.

TRANSAXLE BYPASS VALVES

Engage and disengage transaxles so unit can be moved with the engine off. See Figure 22.

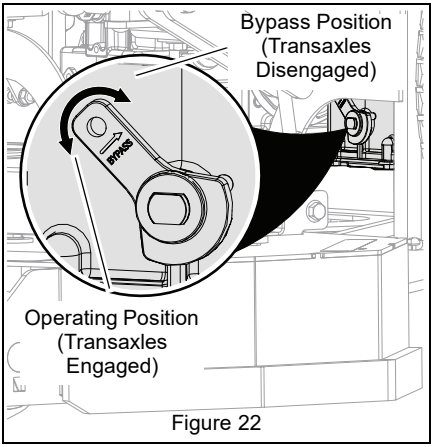

Figure 22

ANTI-SCALP WHEELS

Help prevent the deck from contacting the ground and scalping the lawn when mowing over high spots.

SAFETY INTERLOCK SYSTEM

Monitors the interaction of various unit features for operator safety.

PARKING BRAKE LEVER

See Figure 23.

Engages the parking brake. The engine will not start when brake is released.

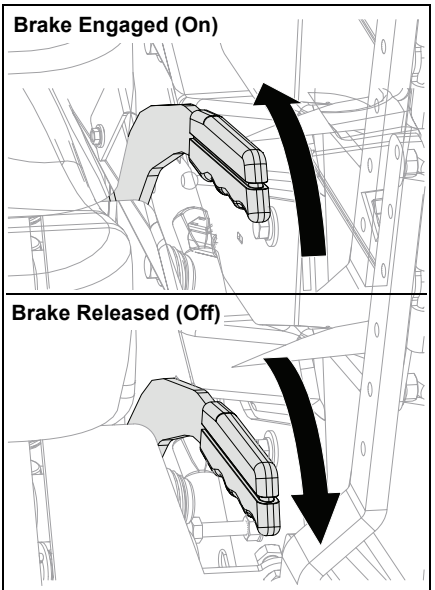

Figure 23

SEAT ADJUSTMENT LEVER

Unlocks seat to allow operator to move seat forward or backward and then lock in desired position.

SEAT HEIGHT ADJUSTMENT SWITCH

Raises and lowers seat height for operator comfort.

LUMBAR SUPPORT ADJUSTMENT LEVER

Controls the lumbar support in the backrest for operator comfort.

BACKREST ANGLE DIAL

Controls backrest angle for operator comfort.

BEFORE OPERATION

WARNING: AVOID INJURY. Read and understand the *Safety* section before proceeding.

1. Know how to stop in an emergency. See *Emergency Stopping* on page 23.
2. Check fuel level and add fuel if needed.

IMPORTANT: Use fresh unleaded fuel with an octane rating of at least 87. DO NOT use E85 blended fuels; the engine is not E20 / E30 / E85 compatible. The maximum recommended ethanol content is 10%. Gravely recommends using a quality fuel stabilizer in all fuel. See *Short-Term Storage* on page 46.

3. Check engine oil level and add oil if needed. Refer to engine manual.
4. Check hydraulic oil level. See *Check Hydraulic System* on page 27.
5. Check condition of air cleaner. Refer to engine manual.
6. Check function of all controls.
7. Ensure all guards are in place and securely fastened.
8. Check function of the Safety Interlock System by performing the tests below. Contact your Gravely dealer for repair if any of the tests fail.

WARNING: AVOID INJURY. Failure of Safety Interlock System together with improper operation can result in severe personal injury.

Test	Steering Levers	PTO	Parking Brake	Result
Starting Interlock				
1	Neutral	Off	Engaged	Engine starts.
2	Forward, Neutral, Reverse	On	Engaged or Disengaged	Engine does not start.
3	Forward, Neutral, Reverse	On or Off	Disengaged	Engine does not start.
Operating Interlock (Engine On)				
4 *	Forward, Neutral, Reverse	On	Engaged or Disengaged	Engine shuts off.
5 *	Forward, Neutral, Reverse	On or Off	Disengaged	Engine shuts off.
* When operator lifts off seat.				

POSITION ROPS

IMPORTANT: Inspect ROPS and seatbelt for damage and loose or missing hardware.

Raise Center Bar

See Figure 24.

1. Remove hairpins from lock pins and remove lock pins from hinge plate.
2. Raise center bar and secure with lock pins and hairpins.

WARNING: AVOID INJURY. Seatbelt MUST be worn when operating with center bar raised.

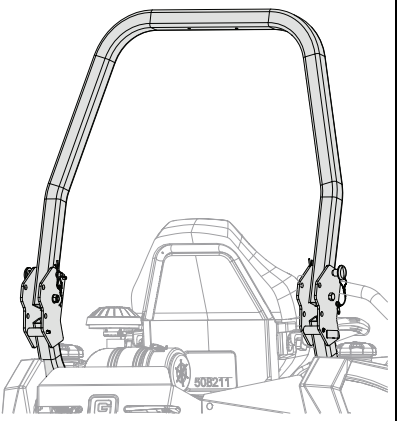

Figure 24

Lower Center Bar

See Figure 25.

WARNING: AVOID INJURY. Lower the center bar only when needed to drive under an object. There is no rollover protection with the center bar in the lowered position. DO NOT wear seatbelt when ROPS is in lowered position.

1. Remove hairpins from lock pins and remove lock pins from hinge plate.
2. Lower center bar and secure with lock pins and hairpins.

IMPORTANT: Return center bar to the raised position when clear of obstacles.

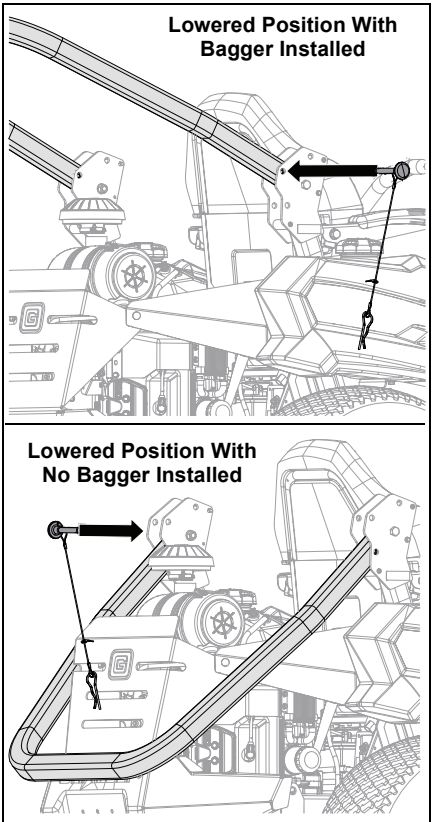

Figure 25

ADJUST SEAT

See Figures 26 and 27.

WARNING: AVOID INJURY. Make all seat adjustments with the unit stopped, parking brake engaged and engine off.

Set Seat Height

Models 992510, 992511, 992512, 992530, 992531

Toggle seat height adjustment switch left to raise seat or right to lower seat.

Models 992515, 992519

Rotate seat height adjustment dial on front of seat to match the approximate weight of the operator.

Set Seat Position

1. While seated, pull seat adjustment lever inward and slide seat forward or backward to desired position.
2. Release lever and slide seat slightly forward or backward to lock position.

Set Lumbar Support

- Lift lever to increase lumbar support.
- Lower lever to decrease lumbar support.

Models 992510, 992511, 992512, 992530, 992531

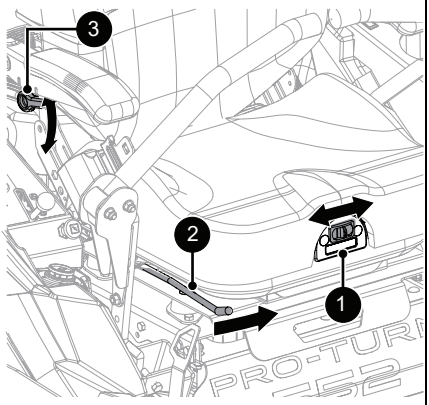

1. Seat Height Adjustment Switch
2. Seat Adjustment Lever
3. Lumbar Support Lever

Figure 26

Models 992515, 992519

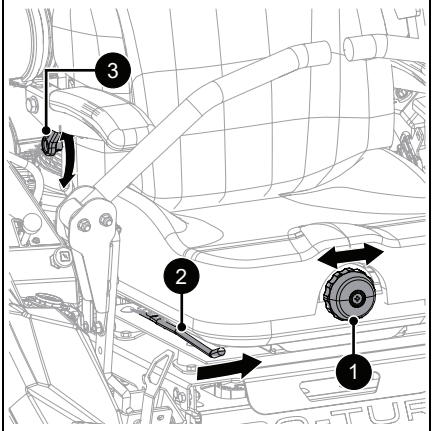

1. Seat Height Adjustment Dial
2. Seat Adjustment Lever
3. Lumbar Support Lever

Figure 27

See Figure 28.

Set Backrest Angle

Rotate dial on left side of seat to adjust backrest angle.

Set Armrest Angle

Turn height adjustment knob clockwise to raise front of armrest or counterclockwise to lower front of armrest.

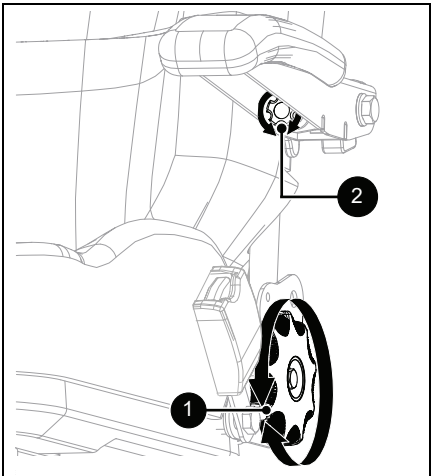

1. Backrest Angle Dial
2. Armrest Angle Adjustment Knob

Figure 28

SET CUTTING HEIGHT

See Figure 29.

1. Push mower lift pedal forward to relieve pressure from height-of-cut dial.
2. Adjust deck pedal if necessary. See *Adjust Deck Lift Pedal* on page 39.
3. Rotate HOC dial to desired setting.

IMPORTANT: HOC adjustment dial displays cutting height in 1.27 cm (1/2") increments but can be adjusted from 2.54 cm – 14.0 cm (1" – 5.5") in 0.64 cm (1/4") increments.

4. Slowly release mower lift pedal until deck stops at selected height.

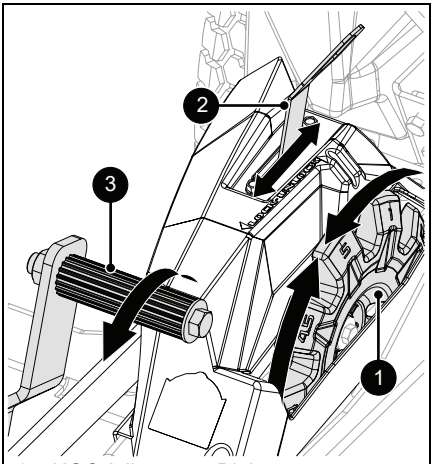

1. HOC Adjustment Dial
2. Transport Lock
3. Deck Lift Pedal

Figure 29

OPEN FUEL VALVE

See Figure 30.

IMPORTANT: Fuel gauge only displays fuel level from the selected tank.

- Turn fuel valve toward the left or right fuel tank to use fuel from that tank.
- Move valve to the off position when storing or transporting unit.

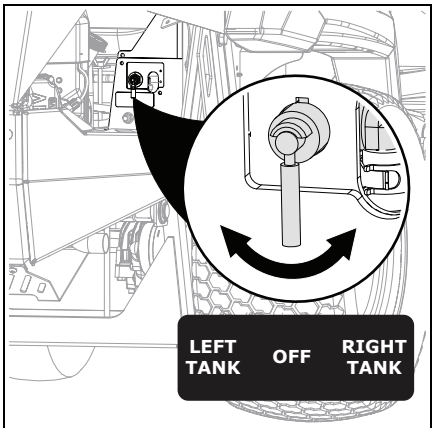

Figure 30

OPERATION

WARNING: AVOID INJURY. Read and understand the *Safety* section before proceeding.

IMPORTANT: All references to left, right, front or rear are given from the perspective of operator in operator's position, facing the direction of forward travel.

EMERGENCY STOPPING

WARNING: AVOID INJURY. Operating on slopes may lead to loss of steering control. Be prepared to react.

1. Place steering levers in neutral position and rotate outward.
2. Engage parking brake.
3. Push PTO switch down to off position.
4. Turn key to off position and remove from ignition.

START THE ENGINE

1. Move steering levers to neutral position.
2. Engage parking brake.
3. Push PTO switch down to off position.
4. Turn fuel valve to use fuel from desired tank.
5. *Models 992510, 992511, 992512, 992515 only:* If engine is cold, move choke control lever to on position. DO NOT use choke on a warm engine.
6. Move throttle control lever to 3/4 fast position.
7. *Models 992510, 992511, 992512, 992515 only:* Insert ignition key and turn key to the start position.
   Models 992519, 992530, 992531 only: Insert ignition key. Turn key to the on position for approximately 2 to 3 seconds to prime the fuel pump and then turn key to the start position.
8. Release key when engine starts.

NOTICE: Do not operate the starter for more than 10 seconds per starting attempt. If the engine does not start, allow a 60-second cool down period between starting attempts.

9. *Models 992510, 992511, 992512, 992515 only:* Gradually move choke control lever to the off position after engine starts.

OPERATE UNIT

1. Start the engine. See *Start The Engine* on page 23.
2. Release parking brake.
3. Set throttle control lever to fast position.

IMPORTANT: Engaging the PTO knob with the throttle lever set lower than fast position can cause excessive belt wear. ALWAYS use fast position when engaging the PTO.

4. Pull PTO switch up to on position.

IMPORTANT: Never engage the PTO if the mower is plugged with grass or other material. This may cause damage to the electric clutch.

WARNING: AVOID INJURY. Move the steering levers slowly and keep the throttle at slow speed until you learn how to operate the unit.

5. Move steering levers to begin mowing.

Direction of Travel	Lever Position
Forward	Push both levers forward from neutral position. 
Reverse	Pull both levers backward from neutral position. 
Right Turn	Push left lever farther forward than the right lever. 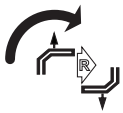
Left Turn	Push right lever farther forward than the left lever. 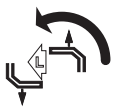
Stop	Return both levers to neutral position. 

IMPORTANT: Aggressive turning can scuff or damage lawns. Always keep both wheels rotating when making sharp turns. DO NOT make turns with inside wheel completely stopped. For minimum turning radius, slowly reverse inside wheel while moving outside wheel slowly forward.

For Best Mowing Results

- Cut grass when it is dry.
- Keep mower blades sharp.
- Keep mower deck properly leveled.
- Adjust anti-scalp wheels to prevent scalping.
- Do not set height of cut too low. For very tall grass, mow twice.
- Do not travel too fast.
- Mow with engine at full throttle.
- When mulching, only remove 1/3 of grass length per cutting. Do not cut more than 2.5 cm (1") at a time.
- Discharge clippings into areas already cut.
- Change cutting pattern with each mowing.
- Do not allow grass or debris to collect inside mower deck. Clean after each use.

STOP THE ENGINE

WARNING: AVOID INJURY. Wait for all moving parts to stop before leaving operator's position.

1. Move steering levers to the neutral position.
2. Engage parking brake.
3. Reduce throttle to 3/4 fast position.
4. Push PTO switch down to off position.
5. Move throttle control lever to slow position.
6. Turn key to off position and remove from ignition.

MOVE UNIT MANUALLY

See Figure 31.

Bypass the transaxles to move the unit with the engine off.

1. Place unit in service position. See *Service Position* on page 25.
2. Lower deck to lowest cutting height.
3. Turn both transaxle bypass valves clockwise to the bypass position.
4. Release parking brake and push unit to desired location.
5. Engage parking brake.
6. Turn both transaxle bypass valves counterclockwise to operating position.

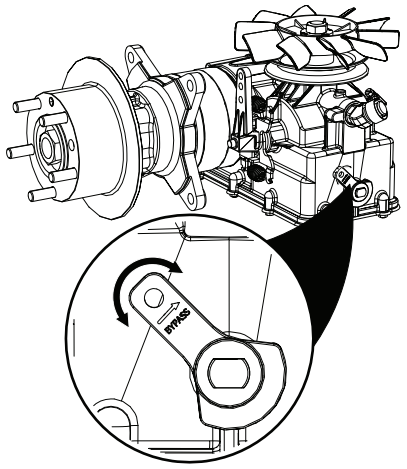

Figure 31

7. Return unit to operating position.

TRANSPORT UNIT

1. Move transport lock release lever forward.
2. Push deck lift pedal completely forward to engage transport lock. Release pedal.
3. Move unit to transport vehicle.
4. Stop engine, engage parking brake, remove key from ignition and turn fuel valve to off position.
5. Secure mower frame to transport vehicle.

NOTICE: NEVER secure unit to vehicle from rods or linkages that could be damaged.

RELEASE TRANSPORT LOCK

1. Push deck lift pedal forward and move transport lock release lever to the rear position.
2. Slowly return mower lift pedal to resting position.

MAINTENANCE

WARNING: AVOID INJURY. Read and understand the *Safety* section before proceeding.

Proper maintenance can prolong the life of unit. The *Maintenance Schedule on page 26* shows the recommended service schedule.

Your Gravely dealer can provide service and adjustments to keep your unit operating at peak efficiency. Contact an authorized engine manufacturer's service center for engine service.

More frequent service may be required due to working conditions (heavy loads, high ambient temperatures, dusty conditions, or airborne debris).

See the maintenance instructions in the Engine Manual for additional information.

SERVICE POSITION

1. Park unit on a flat, level surface.
2. Engage parking brake.
3. Stop engine, remove key and wait for moving parts to stop and for hot parts to cool.
4. Remove and retain hardware securing seat plate to seat mount. See Figure 32.

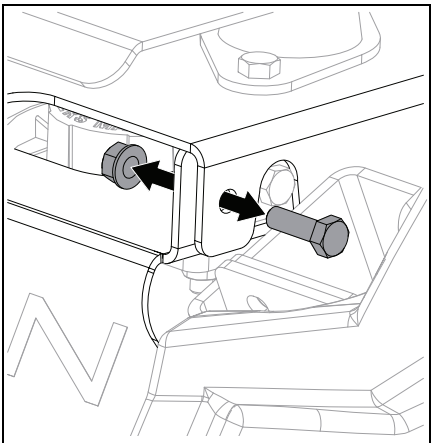

Figure 32

5. Lift seat plate assembly and slide seat plate forward. Ensure bracket and seat plate holes are aligned.
6. Secure seat bracket to seat plate using hardware removed in step 4. Repeat on opposite side of unit. See Figure 33.

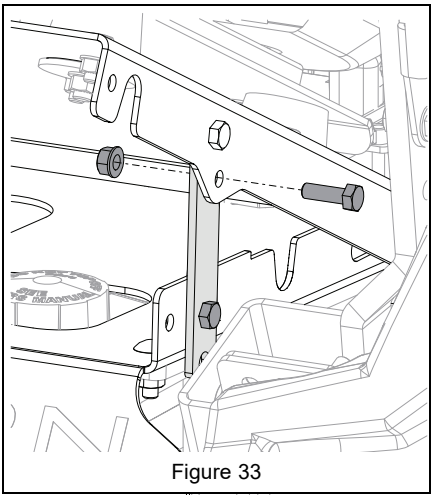

Figure 33

MAINTENANCE SCHEDULE

Service Performed	Each Use	Every 25 hrs.	Every 50 hrs.	Every 100 hrs.	Every 300 hrs.	Every 500 hrs.	Every 1000 hrs.
Clean Engine of Any Grass or Debris	•						
Clean Mower Deck of Any Grass or Debris	•						
Inspect Belt Cover Grommets for Damage	•						
Check Safety Interlock System	•						
Check Hydraulic System	•						
Check Engine Oil *	•						
Change Engine Oil *							
Check Tire Pressure	•						
Check Mower Blades		•					
Check Air Filter *			•				
Lubricate Unit			•				
Check Parking Brake			•				
Clean Battery				•			
Clean Engine Cooling System *				•			
Check Fasteners				•			
Check Belts				•			
Change Hydraulic Oil and Filter **					•		•
Lubricate Caster Fork Bearings						•	
Lubricate Caster Wheel Bearings						•	
Adjust Clutch‡						•	

* Refer to engine manual for instructions.

** Change after first 300 hours of operation and every 1000 hours thereafter.

‡ Adjust clutch every 500 hours or once per season if used less than 500 hours.

SERVICE PARTS

See your Gravely dealer to purchase service parts for your unit.

Description	Qty.	Part No.
PTO Belt (Engine to Deck) – 52"	1	07200904
PTO Belt (Engine to Deck) – 60"	1	07200712
PTO Belt (Engine to Deck) – 72"	1	07200906
PTO Belt (Engine to Deck) – Mach One	1	07200907
Mower Drive Belt – 52"	1	07200036
Mower Drive Belt – 60"	1	07200038
Mower Drive Belt – 72"	1	07200039
Transaxle Drive Belt – Mach One	1	07200901
Mower Blade – 52"	3	00450300
Mower Blade – 60"	3	09081200
Mower Blade – 72"	3	04774600
Mower Blade – Mach One	3	05290000
Fuel Stabilizer – 118ml (4 oz)	A/R	04730400
Hydraulic Oil Filter	2	21545028
Tune-up Kit – Kawasaki (Models 992511, 992512, 992515, 992519, 992530, 992531)	1	70721600
Tune-up Kit – Kawasaki (Model 992510)	1	70721900
Spindle Bearing Kit	1	59408900
Transaxle Service Kit *	1	70724100
Relay	A/R	04438400
Air Filter – Inner Element	1	21548700
Air Filter – Outer Element	1	21548800
Engine Oil Filter	1	21535800
Fuel Filter	1	21573800

* Includes two gallons of HT-1000 hydraulic oil, two oil filters, two drain plugs, and two washers.

CHECK SAFETY INTERLOCK SYSTEM

See *Before Operation* on page 20. If system does not operate correctly, see your dealer for repair. DO NOT operate until repairs are made.

CHECK HYDRAULIC SYSTEM

Check Hydraulic Oil Level

See Figure 34.

1. Place unit in service position. See *Service Position* on page 25.
2. Check oil level in expansion tanks. Oil should reach the cold fill indicator mark. See Figure 34.

IMPORTANT: Engine should be cold when checking initial oil level.

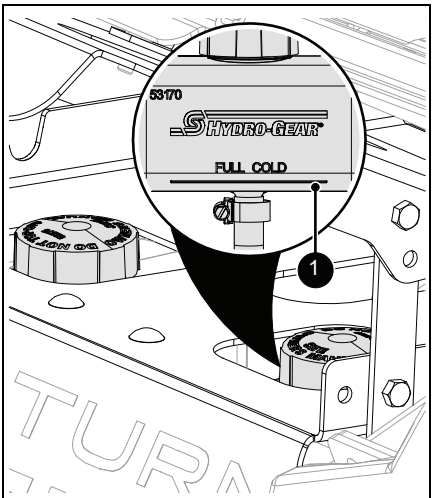

1. Cold Fill Indicator Mark

Figure 34

3. Operate engine for 1 minute and recheck oil levels.
4. Add hydraulic oil, if needed. See *Add Hydraulic Oil* on page 27.

Add Hydraulic Oil

1. Place unit in service position. See *Service Position* on page 25.
2. Remove hydraulic oil expansion tank caps.
3. Fill expansion tanks with HT-1000 Full-Synthetic Hydraulic Fluid (Gravely p/n 00058400) until oil reaches the cold fill indicator mark. See Figure 34.
4. Reinstall expansion tank caps.

Change Hydraulic Oil and Filter

1. Operate unit for a few minutes to warm hydraulic oil.
2. Stop engine, remove key and wait for all moving parts to stop and for hot parts to cool.

See Figures 35 and 36.

3. Position container under drain plug to catch used oil.
4. Wipe drain plug and filter-mounting surface clean.
5. Remove and discard drain plug.
6. Remove and retain breather plug and allow oil to drain completely.
7. After oil has drained, remove oil filter and discard. Properly dispose of oil.
8. Spin new filter onto filter housing until it makes contact. Torque to 13.0 – 15.3 N•m (9.6 – 11.3 lb-ft).

NOTICE: DO NOT over-torque hex plug.

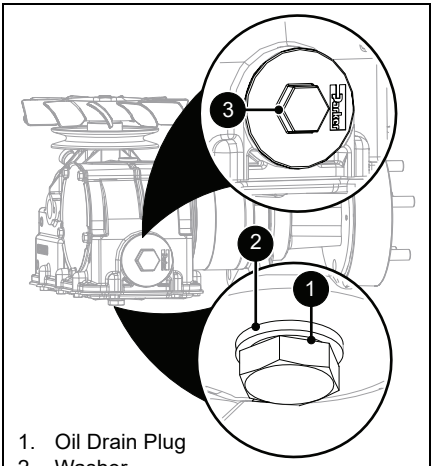

1. Oil Drain Plug
2. Washer
3. Hex Plug / Filter

Figure 35

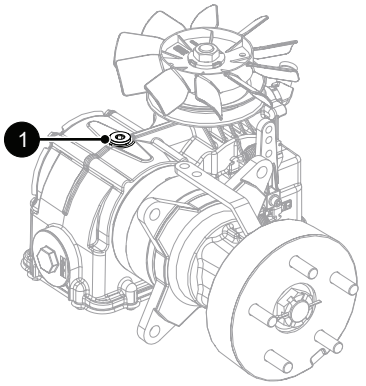

1. Breather Plug

Figure 36

9. Install new drain plug. Hand start threads and torque to 51.5 – 56.9 N•m (38 – 42 lb-ft).
10. Add HT-1000 Full-Synthetic Hydraulic Fluid (Gravely p/n 00058400) to expansion tanks until oil begins to escape from breather plug.
11. Reinstall breather plug. Torque to 11.3 – 13.6 N•m (8.3 – 10 lb-ft)
12. Repeat steps 3 – 11 for other transaxle.
13. Purge hydraulic system. See *Purge Hydraulic System* on page 28.

Purge Hydraulic System

Purge air from hydraulic system after draining oil or changing the filter.

WARNING: AVOID INJURY. This adjustment requires operating the engine. Use extreme care to avoid contact with moving parts and hot surfaces. Be sure rear of unit is well supported and secure before starting engine.

1. Park unit facing a wall or chock wheels.
2. Release parking brake.
3. Support unit so drive wheels are off the ground.
4. Bypass transaxles. See *Move Unit Manually* on page 24.
5. Start the engine and slowly move steering levers forward and backward 5 or 6 times.
6. Stop engine.
7. Return transaxle bypass levers to operating position. See *Move Unit Manually* on page 24.
8. Start engine.
9. Slowly move steering levers forward and backward 5 or 6 times.
10. Stop engine, lower unit to ground and check oil level. Add oil if needed.

Repeat steps 1 – 10 until transaxles operate smoothly in forward and reverse at normal speed without excessive noise.

CHECK TIRE PRESSURE

Check and adjust tire pressure. See *Specifications* on page 48.

WARNING: AVOID INJURY. Explosive separation of tire and rim parts is possible.

- DO NOT inflate tires above maximum pressure on tire sidewalls.
- DO NOT inflate tires with a compressor; use a hand pump.
- DO NOT stand in front of tire assembly when inflating. Use a clip-on chuck and extension hose long enough to allow you to stand to one side.
- DO NOT mount a tire without proper equipment and experience.

CHECK MOWER BLADES

Check blades for wear. Replace or sharpen as needed.

CAUTION: AVOID INJURY. Use sturdy gloves or padding to protect hands when working with mower blades.

Rotation of one blade rotates the other blades.

Remove Blades

1. Place unit in service position. See *Service Position* on page 25.
2. Disconnect spark plug wires.

See Figure 37.

3. Remove hardware securing blades to spindles and remove blades. Retain all hardware for reinstallation.

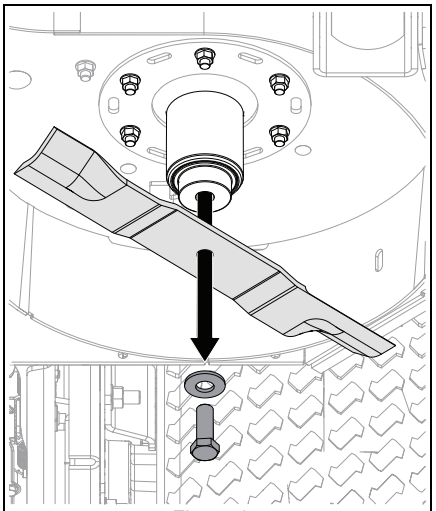

Figure 37

Sharpen Blades

CAUTION: DO NOT sharpen blades while attached to unit.

1. Remove blades from unit. Discard blades if:
   - More than 1.3 cm (1/2") of metal is removed.
   - Air lifts are eroded.
   - Blades are bent or broken.
2. File or grind an equal amount of metal from each cutting edge of the blade until sharp. DO NOT change angle of cutting edge or round the corner of the blade. See Figure 38.

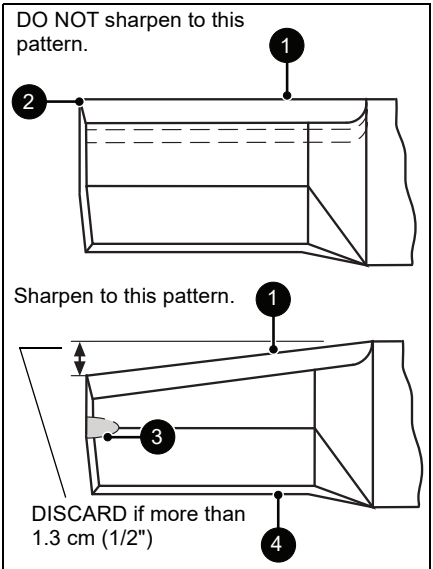

1. Cutting Edge
2. Square Corner
3. Air Lift Erosion
4. Air Lift

Figure 38

CAUTION: Unbalanced blades cause excessive vibration and eventual damage to unit. Balance blades before reinstalling on unit.

NEVER weld or straighten blades.

3. Check blade balance by sliding an unthreaded bolt through center hole. Hold the bolt level. If blade does not remain horizontal, sharpen the heavy end until blade is balanced.

Install Blades

See Figure 37.

CAUTION: Mating surfaces between spindle, lower spindle guard, blade and washer MUST be free of debris to ensure correct tightness and alignment.

1. Install blades onto spindles and secure with original hardware. Torque to 156 – 217 N•m (115 – 160 lb-ft).

IMPORTANT: Ensure Belleville washers are positioned concave (cupped) side against blade.

2. Reconnect spark plug wires.

CHECK PARKING BRAKE

IMPORTANT: Check brake on both sides of unit.

1. Place unit in service position. See *Service Position* on page 25.

See Figure 39.

2. Measure the extension spring length from the outside edge of each spring plug nut. Length must measure between 20.1 cm – 21.1 cm (8 1/4" – 8 5/16").
   - If measurements are outside specification, adjust parking brake. See *Adjust Parking Brake* on page 35.
   - If measurements are within specification, no adjustment is needed.
3. Return unit to operating position.

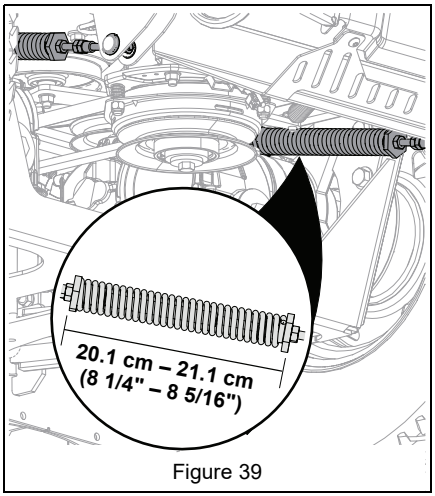

Figure 39

CLEAN BATTERY

WARNING: AVOID INJURY. Battery posts, terminals and related accessories contain lead and lead compounds, chemicals known to the State of California to cause cancer and reproductive harm. Wash hands after handling.

Remove Battery

See Figure 40.

1. Place unit in service position. See *Service Position* on page 25.
2. Disconnect the negative cable and then the positive cable from battery.
3. Loosen wing knobs securing hold-down bracket to battery.
4. Remove bolts from slots in battery tray and remove hold-down bracket.
5. Remove battery.

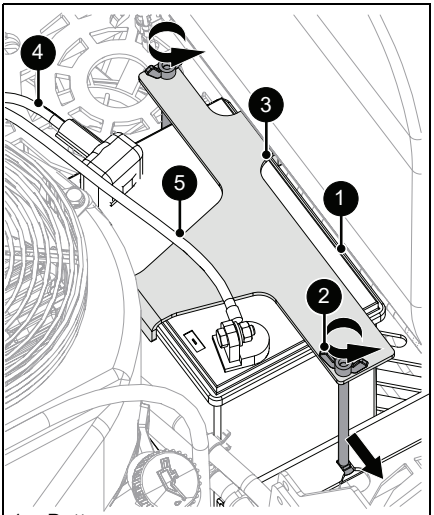

1. Battery
2. Wing Knob
3. Hold-Down Bracket
4. Positive Battery Cable
5. Negative Battery Cable

Figure 40

Clean Battery

1. Clean terminals and battery cable ends with a wire brush.
2. Coat terminals with dielectric grease or petroleum jelly.

Install Battery

1. Install battery and secure with hold-down bracket and wing knobs.
2. Reconnect positive cable and then the negative cable.
3. Place boot over positive terminal.
4. Return seat to operating position.

CHARGE BATTERY

Check battery with a voltmeter. If battery is less than 11 volts, charge battery.

NOTICE: DO NOT fast charge. Charging at a higher rate damages or destroys battery. ONLY use an automatic charger designed for use with your battery.

NOTICE: Always follow information provided on battery by battery manufacturer. Contact battery manufacturer for details regarding charging.

1. Remove battery from unit. See *Remove Battery* on page 30.
2. Place battery on bench in a well-ventilated area.
3. Connect positive lead of charger to positive terminal.
4. Connect negative lead of charger to negative terminal.
5. Charge battery following battery manufacturer's instructions.
6. Reinstall battery. See *Install Battery* on page 30.

Jump Starting

Gravely does not recommend jump starting your unit. Jump-starting can damage engine and system components. Refer to engine manual for details.

CHECK FASTENERS

Check for loose hardware and tighten if necessary.

LUBRICATE UNIT

1. Apply oil to all pivot points and pin connections.
2. Pump grease into grease fittings.

Lubricate Caster Fork Bearings

See Figure 41.

1. Place steering levers in neutral position and engage parking brake.
2. Stop engine, remove key and wait for all moving parts to stop and for hot parts to cool.
3. Remove dust cap.
4. Pump grease into fitting until grease appears at the top of the upper bearing.

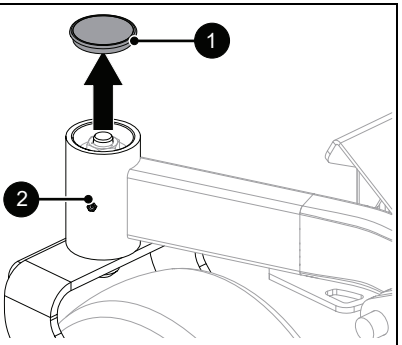

1. Dust Cap
2. Grease Fitting

Figure 41

5. Reinstall dust cap.

Lubricate Caster Wheel Bearings

1. Place steering levers in neutral position and engage parking brake.
2. Stop engine, remove key and wait for all moving parts to stop and for hot parts to cool.
3. Support unit so front wheels are off the ground.
4. Remove wheel from fork.

See Figure 42.

5. Remove end caps from wheel hub.
6. Pump grease into fitting until grease squeezes through the seal in the wheel hub.
7. Wipe away excess grease.
8. Reinstall end caps onto wheel hub.
9. Reinstall wheel into fork and lower unit to ground.

IMPORTANT: Torque wheel lug nuts to 40.7 – 84.1 N•m (30 – 62 lb-ft).

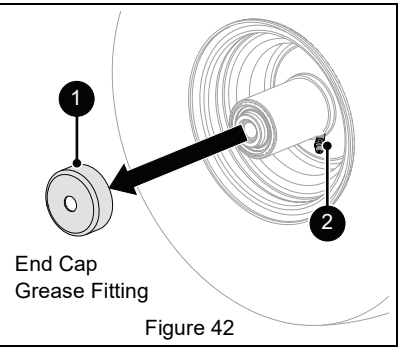

1. End Cap
2. Grease Fitting

Figure 42

SERVICE & ADJUSTMENTS

WARNING: Read and understand the *Safety* section before proceeding.

ADJUST TRANSAXLES

Check For Excessive Creep

WARNING: AVOID INJURY. This adjustment requires operating the engine. Use extreme care to avoid contact with moving parts and hot surfaces. Be sure rear of unit is well supported and secure before starting engine.

1. Operate unit for a minimum of 5 minutes to warm hydraulic system.
2. Stop engine and engage parking brake.
3. Chock front wheels and support unit so both drive wheels are off the ground.
4. Remove drive wheels.
5. Start engine, move throttle lever to fast position and release parking brake.
6. Move steering levers forward and backward 5 or 6 times and then return levers to neutral position.
7. Check hubs for rotation.
   - If there is only slight rotation, stop engine, reinstall wheels and lower unit to ground.
   - If there is excessive rotation, set neutral position as directed below.

IMPORTANT: Torque wheel lug nuts to 81.3 – 122.0 N•m (60 – 90 lb-ft).

Adjust Neutral Position

If wheel hub has excessive rotation after checking for excessive creep, adjust neutral position.

1. Loosen the return-to-neutral screw on the transaxle. See Figure 43.

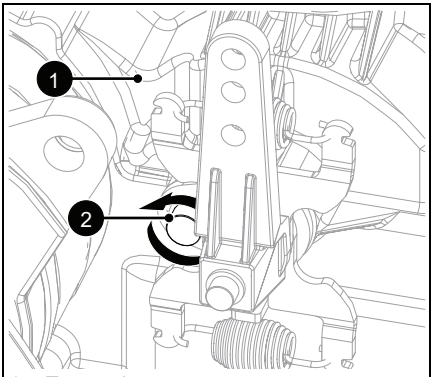

1. Transaxle
2. Return-to-Neutral Screw

Figure 43

2. Slowly turn transaxle control arm in the opposite direction of hub rotation until hub stops. See Figure 44.

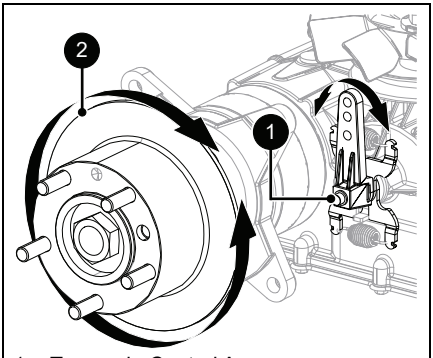

1. Transaxle Control Arm
2. Wheel Hub

Figure 44

3. Hold the transaxle control arm in position and tighten the return-to-neutral screw.
4. Start engine, move throttle lever to fast position and release parking brake.
5. Move steering levers forward and backward 5 or 6 times and then return levers to neutral position.

6. Check wheel hubs for rotation.
   - If there is only slight rotation, stop engine, reinstall wheels and return unit to operating position.
   - If there is excessive rotation, repeat steps 1 – 5.

IMPORTANT: Torque wheel lug nuts to 81.3 – 122.0 N•m (60 – 90 lb-ft).

ADJUST PARKING BRAKE INTERLOCK

WARNING: AVOID INJURY. This adjustment requires operating the engine. Use extreme care to avoid contact with moving parts and hot surfaces. Be sure unit is secure and will not move.

If the parking brake interferes with the neutral position of the steering levers and the transaxles, the brake interlock may need adjustment.

Check Parking Brake Interlock

1. Place unit in service position, but DO NOT engage parking brake. Chock or block wheels instead. See *Service Position* on page 25.
2. Make sure steering levers are in neutral position.
3. Watch the steering levers and engage parking brake.
   - If one or both steering levers move from the neutral position, set parking brake neutral. See *Set Parking Brake Neutral* on page 33.
   - If there is little to no steering lever movement, advance to step 4.
4. Start the engine and move the throttle lever to fast position.
   - If the unit creeps or the transaxles make a whining sound, set parking brake neutral. See *Set Parking Brake Neutral* on page 33.
   - If the unit doesn't move and the transaxles are quiet, no adjustment is needed.
5. Stop engine, return unit to operating position and adjust steering levers. See *Adjust Steering Levers* on page 33.

Set Parking Brake Neutral

1. Adjust transaxles. See *Adjust Transaxles* on page 32.
2. Stop engine, remove key and wait for moving parts to stop and for hot parts to cool.
3. Release parking brake.
4. Loosen hardware retaining eccentric spacer on the affected side(s).
5. Engage parking brake and rotate eccentric spacer so it aligns in brake interlock. See Figure 45.

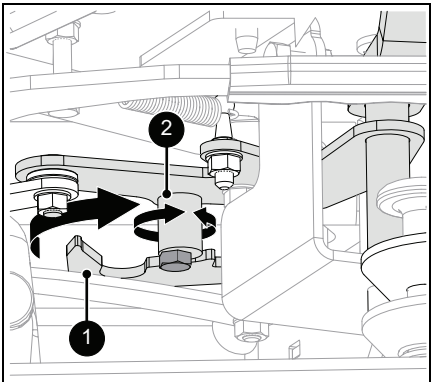

1. Parking Brake Interlock
2. Eccentric Spacer

Figure 45

6. Tighten eccentric spacer hardware.
7. Stop engine, return unit to operating position and adjust steering levers. See *Adjust Steering Levers* on page 33.

ADJUST STEERING LEVERS

Align Steering Levers

If there is more than 3.2 mm (1/8") between the horizontal alignment of the steering levers, align the levers.

1. Place steering levers in neutral position and engage parking brake.
2. Stop engine, remove key and wait for moving parts to stop and for hot parts to cool.
3. Loosen mounting hardware, align levers and tighten hardware. See Figure 46.

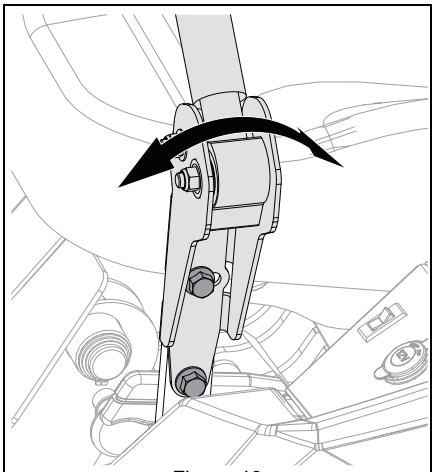

Figure 46

Adjust Forward Position

The steering lever forward position may be adjusted for operator comfort.

See Figure 46.

1. Place steering levers in neutral position and engage parking brake.
2. Stop engine, remove key and wait for moving parts to stop and for hot parts to cool.
3. Loosen mounting hardware on steering lever assemblies.
4. Place steering levers in desired position:
   - Gently push levers forward for greater distance from operator.
   - Gently pull levers back for closer distance to operator.
5. Tighten hardware.

IMPORTANT: The steering levers should not touch each other. There should be no more than 3.2 mm (1/8") difference between the horizontal and vertical alignment of the levers.

Adjust Height

See Figure 47.

The steering lever height may be adjusted for operator comfort.

1. Place steering levers in neutral position and engage parking brake.
2. Stop engine, remove key and wait for moving parts to stop and for hot parts to cool.
3. Remove steering lever hardware and remove steering lever from lower control arm.
4. Position steering lever at desired height and align with lower control arm. Secure with original hardware.

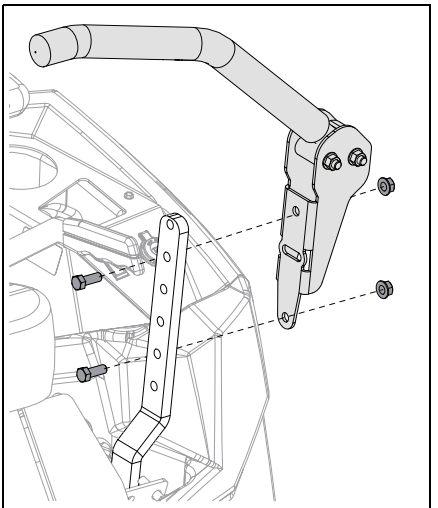

Figure 47

5. Adjust steering lever position. See *Adjust Forward Position* on page 34.
6. Adjust eccentric spacer so levers are at the same height and have a 1.3 – 2.5 cm (1/2 – 1") gap between lever ends. See Figure 48.

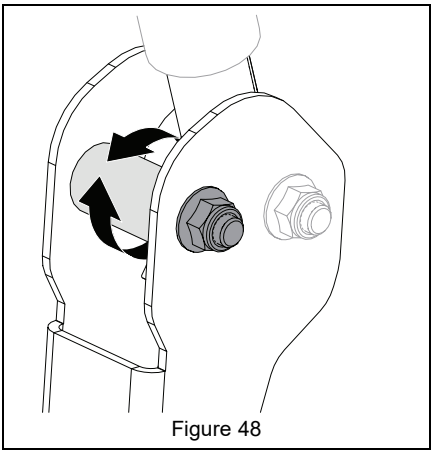

Figure 48

ADJUST UNIT TO DRIVE STRAIGHT

Adjust Tire Pressure

1. Place unit in service position. See *Service Position* on page 25.
2. Check tire pressures. If needed, adjust to recommended pressures. See *Specifications* on page 48.

IMPORTANT: DO NOT inflate tires outside recommended range.

3. Check tracking. If unit does not drive in straight line, adjust limiter bolts. See *Adjust Limiter Bolts* on page 35.

Adjust Limiter Bolts

See Figure 49.

Limiter bolts can be adjusted to increase or decrease drive wheel speeds. To adjust:

1. Loosen jam nut.
   - Turn limiter bolt counterclockwise to increase maximum drive wheel speed on that side.
   - Turn limiter bolt clockwise to reduce maximum drive wheel speed on that side.
2. Tighten jam nut.

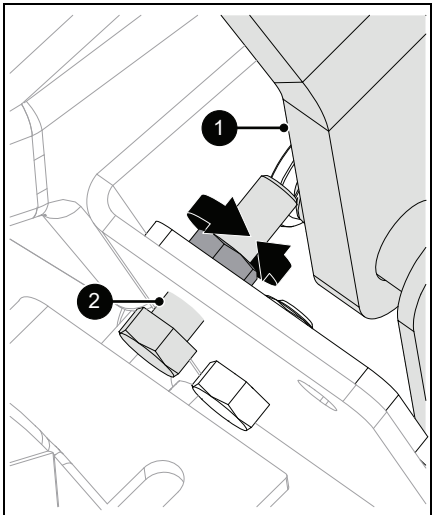

1. Lower Control Arm
2. Limiter Bolt

Figure 49

3. Adjust steering lever position. See *Adjust Forward Position* on page 34.

ADJUST PARKING BRAKE

See Figure 50.

IMPORTANT: Adjust left and right-side brakes.

1. Check parking brake. See *Check Parking Brake* on page 30.
2. Engage parking brake.
3. Tighten nut behind trunnion until spring measures between 21.0 cm (8 1/4") - 21.1 cm (8 5/16").
4. Engage and disengage brake several times. Check spring measurement to ensure it is within specified adjustment.

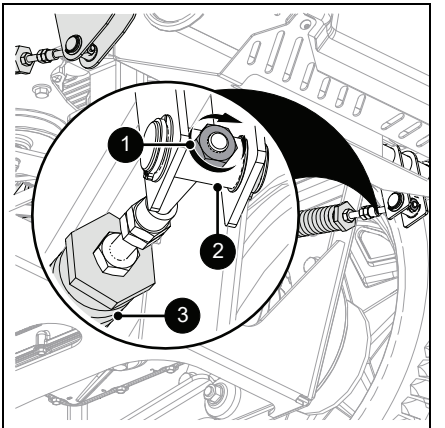

1. Jam Nut
2. Trunnion
3. Compression Spring

Figure 50

REPLACE MOWER BELTS

CAUTION: Damaged or worn belts may result in injury and / or damage to the unit. Check belts for excessive wear or cracks often.

Remove PTO Belt

1. Stop engine, remove key and wait for moving parts to stop and for hot parts to cool.
2. Engage parking brake.
3. Position mower deck at lowest cutting height.
4. Remove and retain belt covers.
5. Lift and rotate access panel rearward until it locks into place. See Figure 51.

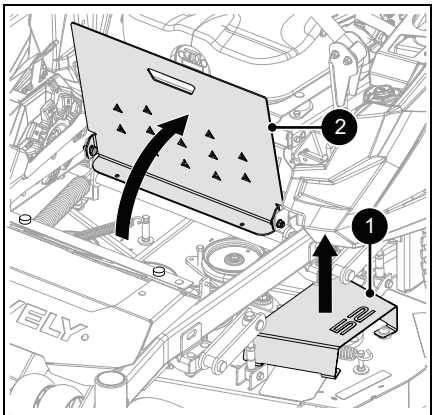

1. Belt Cover
2. Access Panel

Figure 51

CAUTION: Use care when releasing idler spring tension. Keep body parts away from idlers when performing this operation.

See Figure 52.

6. Slowly remove spring hook from anchor bolt to release tension from belt idler.
7. Remove PTO belt.

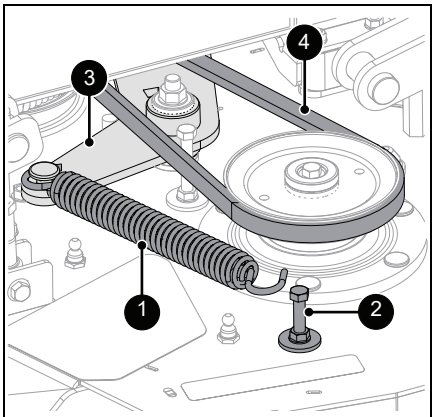

1. Spring
2. Anchor Bolt
3. PTO Belt Idler
4. PTO Belt

Figure 52

Remove Mower Drive Belt

See Figure 53.

1. Slowly remove spring hook from anchor bolt to release tension from belt idler.
2. Remove mower drive belt.

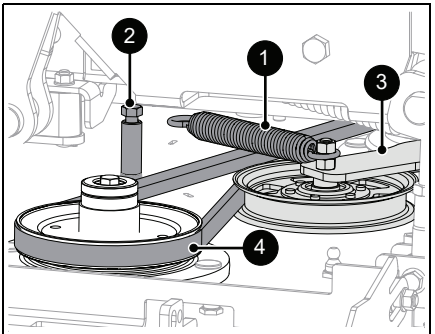

1. Spring
2. Anchor Bolt
3. Mower Drive Belt Idler
4. Mower Drive Belt

Figure 53

Install Mower Drive Belt

See Figure 54.

1. Install mower drive belt around bottom groove of split pulley at deck center and around bottom groove of right spindle pulley.
2. Reinstall idler spring hook around anchor bolt to apply tension to belt.

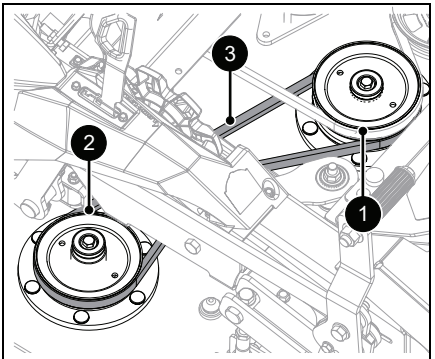

1. Split Pulley
2. Right Spindle Pulley
3. Mower Drive Belt

Figure 54

Install PTO Belt

IMPORTANT: Mower drive belt MUST be installed before PTO belt. See *Install Mower Drive Belt* on page 36.

1. Install PTO belt around clutch sheave at rear of unit.

See Figure 55.

2. Install PTO belt around top groove of split pulley at deck center and around left spindle pulley.
3. Align belt with idler pulleys.
4. Reinstall idler spring hook around anchor bolt to apply tension to belt.

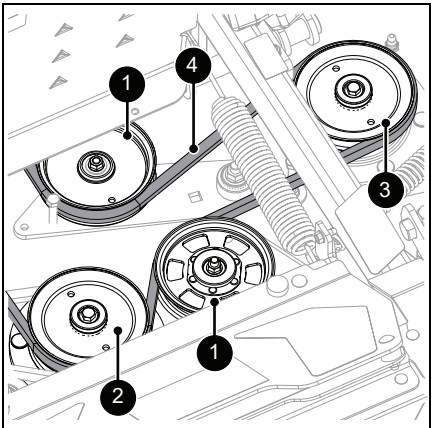

1. Idler Pulley
2. Split Pulley
3. Left Spindle Pulley
4. PTO Belt

Figure 55

IMPORTANT: Ensure belts are correctly aligned in pulleys.

5. Reinstall belt covers.
6. Lift access panel to close panel. See Figure 56.

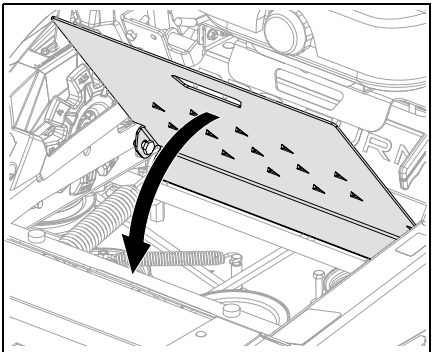

Figure 56

REPLACE TRANSAXLE DRIVE BELT

Remove Transaxle Drive Belt

1. Place steering levers in neutral position and engage parking brake.
2. Stop engine, remove key and wait for moving parts to stop and for hot parts to cool.
3. Remove PTO belt from clutch. See *Remove PTO Belt* on page 35.

See Figure 57.

CAUTION: Use care when releasing idler spring tension. Keep body parts away from idlers when performing this operation.

4. Insert breaker bar or similar tool into square hole of idler arm.
5. Pull breaker bar counter-clockwise to release tension from belt.

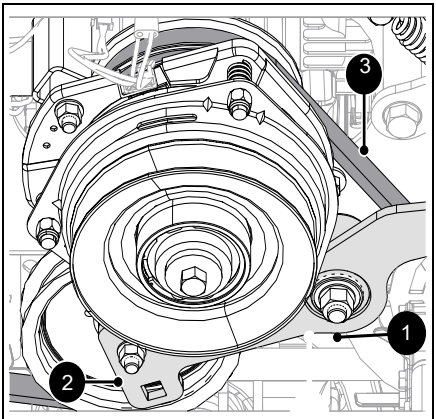

1. Idler Arm
2. Square Hole
3. Transaxle Drive Belt

Figure 57

6. Disconnect clutch wire. See Figure 58.

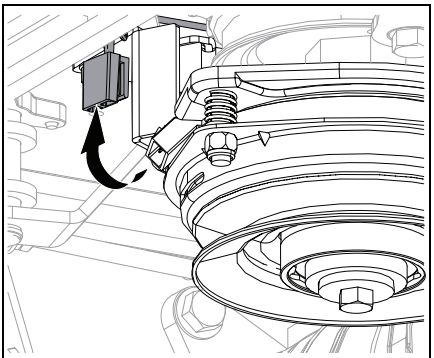

Figure 58

See Figure 59.

7. Remove hardware securing clutch stop bracket to frame and remove bracket.

NOTICE: DO NOT cut cable tie.

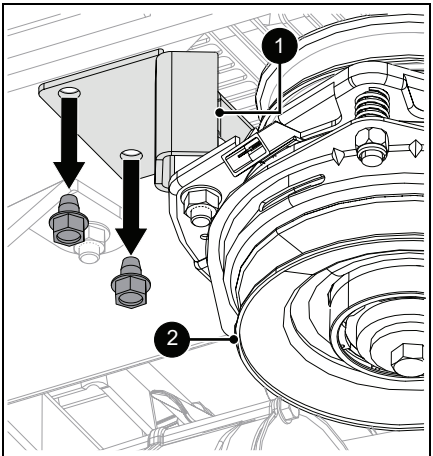

1. Clutch Stop Bracket
2. Clutch

Figure 59

8. Disconnect spring from anchor bolt. See Figure 60.

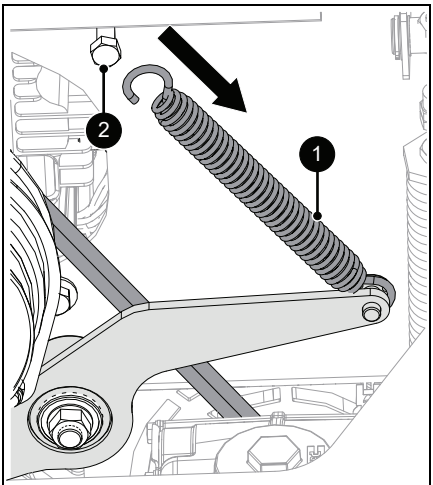

1. Spring
2. Anchor Bolt

Figure 60

9. Remove transaxle drive belt from drive system in the following order:
   a. From right transaxle sheave.
   b. From left transaxle sheave.
   c. From engine sheave.

Install Transaxle Drive Belt

See Figure 61.

1. Install transaxle drive belt to drive system in the following order:
   a. Around left transaxle sheave.
   b. Around engine sheave.
   c. Around right transaxle sheave.
2. Align belt with idler pulley.
3. Reconnect idler spring hook to anchor bolt.
4. Insert breaker bar or similar tool into square hole of idler arm.
5. Pull breaker bar clockwise to increase belt tension.

IMPORTANT: Make sure belt has tension and is aligned in all pulleys.

See Figure 61.

6. Reinstall clutch stop bracket and secure with original hardware.
7. Reinstall clutch wire.

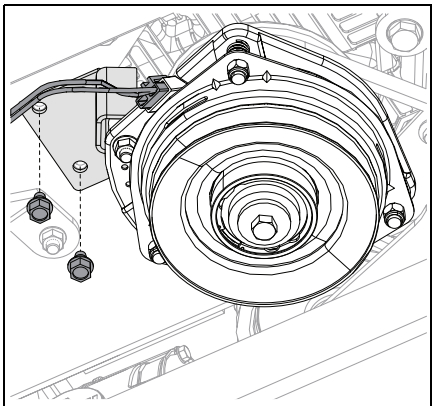

Figure 61

8. Return seat to operating position.
9. Reinstall PTO belt. See *Install PTO Belt* on page 37.

ADJUST ANTI-SCALP WHEELS

See Figure 62.

The anti-scalp wheels are set at the factory for typical mowing height, but can be adjusted for high or low cutting conditions.

1. Place steering levers in neutral position and engage parking brake.
2. Stop engine, remove key and wait for moving parts to stop and for hot parts to cool.
3. Remove hardware securing anti-scalp wheels to deck and remove wheels.
4. Position wheels as necessary:
   - For a very high cutting height, set the anti-scalp wheels in the lowest position on the bracket.
   - For a very low cutting height, set the anti-scalp wheels in the highest position on the bracket.
5. Secure with original hardware.

IMPORTANT: All anti-scalp wheels MUST be set to the same height.

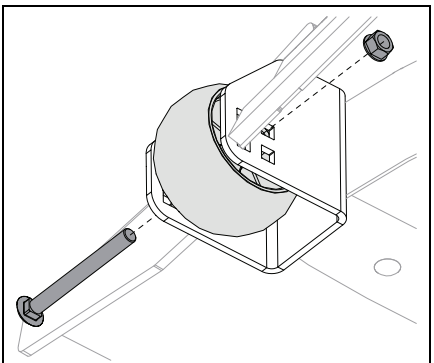

Figure 62

ADJUST DECK LIFT PEDAL

See Figure 63.

1. Place steering levers in neutral position and engage parking brake.
2. Stop engine, remove key and wait for moving parts to stop and for hot parts to cool.
3. Remove foot pedal lever securing foot pedal arm to deck lift arm.
4. Rotate foot pedal arm to align with desired location in deck lift arm.
5. Reinstall foot pedal lever and tighten.

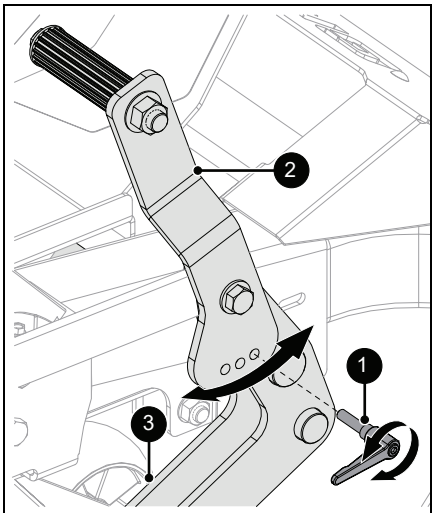

1. Foot Pedal Lever
2. Foot Pedal Arm
3. Deck Lift Arm

Figure 63

ADJUST DECK LIFT ASSIST

See Figure 64.

The deck lift assist springs may be adjusted to modify deck lift assist and deck stability. Increased spring tension leads to easier deck lifting, but also decreases deck stability.

1. Loosen jam nuts on spring anchors.
2. Adjust lift assist springs equally on each side of deck.
   - Turn spring anchors counterclockwise to decrease lift assist and increase deck stability.
   - Turn spring anchors clockwise to increase lift assist and decrease deck stability.

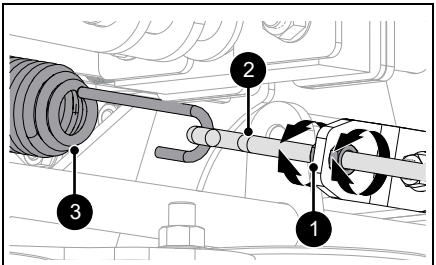

1. Jam Nut
2. Spring Anchor
3. Spring

Figure 64

IMPORTANT: Excessive spring tension increases the potential for deck to lift and bounce over rough terrain and affect cut quality.

4. Set deck to 8.9 cm (3.5") HOC position.
5. *52" / 60" Decks Only:* Measure spring anchor length from outside edge of jam nut to bolt end. Readjust spring tension if necessary. See Figure 65.
6. *72" Deck Only:* Tighten to maximum spring extension.

IMPORTANT: Lift assist springs MUST be adjusted equally.

7. Tighten jam nuts against spring anchors.

52" / 60" Deck: 8.26 cm ± 0.64 cm (3.25" ± 0.25")

72" Deck: Maximum Spring Extension

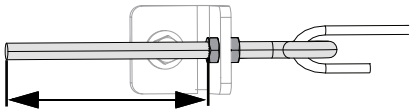

HOC Position: 8.26 cm (3.25")

Figure 65

REMOVE / INSTALL MOWER DECK

Remove Deck

1. Place unit in service position. See *Service Position* on page 25.

WARNING: AVOID INJURY. Springs store energy. Keep body parts away from pinch points when removing the deck.

2. Remove PTO belt from clutch. See *Remove PTO Belt* on page 35.

WARNING: AVOID INJURY. Mower lift arms and lift pedal could cause severe injury if the lift-assist springs are not disconnected before the lift links.

3. Move transport lock release lever forward and push deck lift pedal completely forward to engage transport lock.
4. Position support blocks under each side of the deck.
5. Slowly disconnect lift-assist springs from spring peg on each side of unit. See Figure 66.

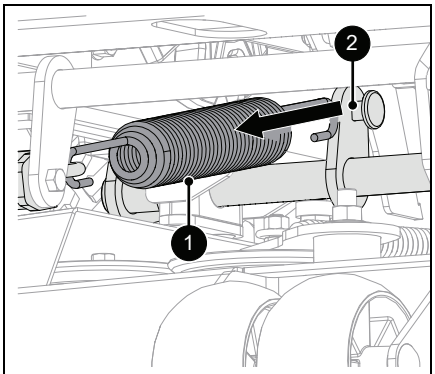

1. Lift-Assist Spring
2. Spring Peg

Figure 66

3. Release transport lock and slowly lower deck until it rests on supports.

See Figure 67.

4. Remove hardware retaining deck lift links to deck lift brackets.
5. Remove rear mounting pins securing mounting arms to deck.

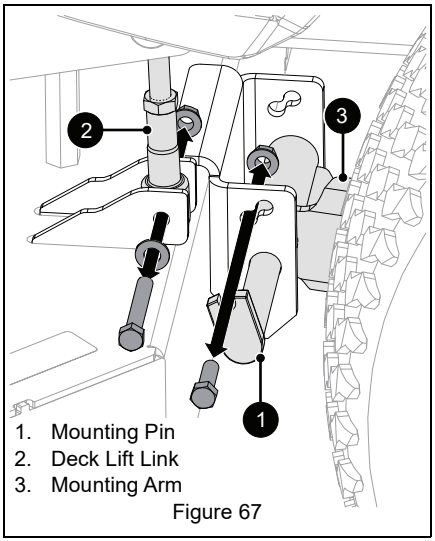

1. Mounting Pin
2. Deck Lift Link
3. Mounting Arm

Figure 67

4. Slide deck out from under unit.

Install Deck

See Figure 67.

1. Position deck under unit.
2. Connect rear mounting arms to deck with mounting pins. Secure with original hardware.
3. Secure deck lift links to deck lift brackets with original hardware.
4. Reinstall PTO belt around clutch. See *Install PTO Belt* on page 37.
5. Move transport lock release lever forward and push deck lift pedal completely forward to engage transport lock.
6. Reconnect lift-assist springs to spring pegs.
7. Level the deck. See *Level and Pitch Mower Deck* on page 41.

LEVEL AND PITCH MOWER DECK

IMPORTANT: Make sure unit is on a flat, level surface and that tires are inflated to the recommended pressures.

Check Blade Level and Pitch

1. Place steering levers in neutral position and engage parking brake.
2. Stop engine, remove key and wait for moving parts to stop and for hot parts to cool.
3. Raise deck to 8.9 cm (3.5") cutting height.

See Figure 68.

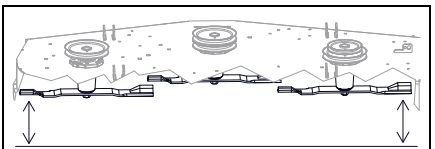

Figure 68

4. Position mower blades so ends point left to right across the width of the deck.
5. Measure the distance between the ground and the cutting edge of the left and right blades. If the measurements are not within 4.7 mm (3/16") of each other, level the deck. See *Level Mower Deck* on page 42. See Figure 69.
6. Position mower blades so ends point front to back and measure the following:
   - At the front of the deck, measure the distance between the ground and the cutting edge of the middle blade.

- At the rear of the deck, measure the distance between the ground and the cutting edge of the left and the right blades.

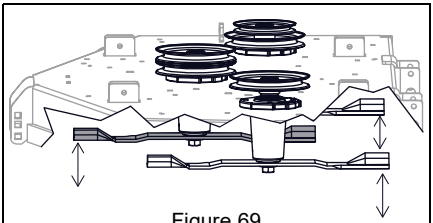

Figure 69

If the front measurement is not 3.2 mm (1/8") lower than the rear measurements, adjust the blade pitch. See *Adjust Blade Pitch* on page 42.

Level Mower Deck

See Figure 70.

1. Lower the high side of deck:
   a. Loosen jam nuts against deck-leveling links.
   b. Turn adjustment bolts counterclockwise.
   c. Measure distance between the ground and cutting edges of left and right blades. Continue adjustment if necessary.
   d. Tighten jam nuts against deck-leveling links.
2. Raise the low side of deck:
   a. Loosen jam nuts against deck-leveling links.
   b. Turn adjustment bolts clockwise.
   c. Measure distance between the ground and cutting edges of left and right blades. Continue adjustment if necessary.
   d. Tighten jam nuts against deck-leveling links.

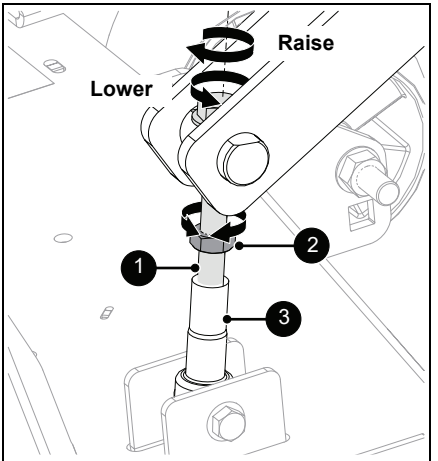

1. Adjustment Bolt
2. Jam Nut
3. Deck-Lift Link

Figure 70

Adjust Blade Pitch

IMPORTANT: Side-to-side deck heights MUST remain even after completing pitch adjustment.

NOTICE: Pitching the front of the blades lower than the rear provides a balance between cut quality and the power needed to cut grass. Certain cutting conditions require the deck rear to be pitched lower than the front. Positioning the deck this way requires more engine power but can provide better cut quality.

1. Increase forward pitch:
   a. Loosen jam nuts against all deck-leveling links.
   b. Turn front adjustment bolts counterclockwise to lower deck front.
   c. Turn rear adjustment bolts clockwise to raise deck rear.
   d. Check adjustment. See *Check Blade Level and Pitch* on page 41.
   e. Tighten jam nuts against deck-leveling links.
2. Decrease forward pitch:
   a. Loosen jam nuts against all deck-leveling links.
   b. Turn front adjustment bolts clockwise to raise deck front.
   c. Turn rear adjustment bolts counterclockwise to lower deck rear.
   d. Check adjustment. See *Check Blade Level and Pitch* on page 41.

e. Tighten jam nuts against deck-leveling links.

ADJUST CLUTCH

NOTICE: Adjust clutch every 500 hours or once per season if used less than 500 hours.

See Figure 71.

If clutch operates incorrectly or sounds abnormal, check the gap at the three inspection slots.

Check Clutch

1. Place unit in service position. See *Service Position* on page 25.
2. Measure gap between the armature and rotor:
   - A 0.4 mm – 0.5 mm (0.016" – 0.020") feeler gauge should fit between the armature and rotor and make slight contact with each.
3. Repeat measurement for remaining inspection slots.
4. If gap is within range, no adjustment is needed.

Adjust Clutch

1. Place unit in service position. See *Service Position* on page 25.
1. Loosen adjustment nut until a 0.5 mm (0.020") feeler gauge fits between armature and rotor.
2. Tighten adjustment nut until armature and rotor make slight contact with feeler gauge.
3. Repeat at remaining inspection slots.

NOTICE: Air gap MUST be even at all inspection slots.

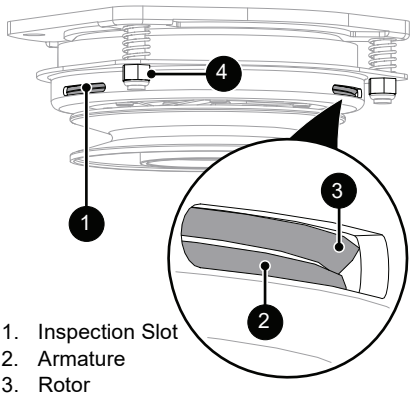

1. Inspection Slot
2. Armature
3. Rotor
4. Gap Adjustment Nut

Figure 71

ELECTRICAL SERVICE

WARNING: Read and understand the *Safety* section before proceeding.

See Figure 72.

See *Controls & Features* on page 15 for fuse box location

Replace Fuse

IMPORTANT: To avoid damaging the circuit, replace fuses with fuses of the same amperage rating. Determine the cause of electrical failure and repair before replacing failed electrical components.

1. Place unit in service position. See *Service Position* on page 25.
2. Remove defective fuse.
3. Determine cause of fuse failure and repair condition.
4. Install new fuse.

Replace Relay

NOTICE: Relays are interchangeable. Use only quality replacement parts. See *Service Parts* on page 26.

1. Place unit in service position. See *Service Position* on page 25.
2. Remove defective relay.
3. Determine cause of relay failure and repair condition.
4. Install new relay.

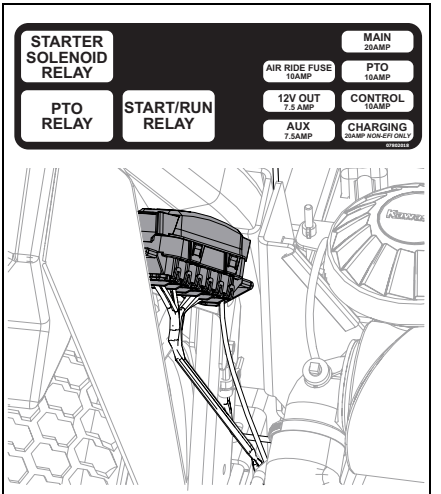

Figure 72

TROUBLESHOOTING

Problem	Probable Cause	Correction
Engine does not start.	PTO switch is in the on position.	Push PTO switch down to off position.
	Parking brake is released.	Engage parking brake.
	Fuel tank is empty.	Fill fuel tank. See *Before Operation* on page 20.
	Fuel supply is contaminated.	Replace with clean fuel.
	Battery is not charged.	Charge battery. See *Charge Battery* on page 30.
	Parking switch is not fully depressed.	Ensure parking brake is fully engaged. See *Parking Brake Lever* on page 19.
	Battery cables are loose or corroded.	Clean and tighten cables. See *Clean Battery* on page 30.
	Spark plug wire(s) are loose or spark plug(s) are faulty.	Connect spark plug wire(s) or replace spark plug(s). Refer to engine manual.
	Safety Interlock System is not engaged or is faulty.	Check Safety Interlock System. See *Before Operation* on page 20.
	Electrical system is faulty.	Contact your Gravely dealer.
	Engine is faulty.	Contact your Gravely dealer.
Engine runs rough.	Choke control lever is in the on position. (Models 992510, 992511, 992512, 992515)	Move lever to off position. See *Choke Control Lever* on page 17.
	Fuel tank is empty.	Fill fuel tank. See *Before Operation* on page 20.
	Spark plug is faulty.	Replace spark plug. Refer to engine manual.
	Fuel filter is dirty.	Clean or replace filter. Refer to engine manual.
	Air filter cartridge is plugged.	Clean or replace air filter cartridge. Refer to engine manual.
	Engine is faulty.	Contact your Gravely dealer.
	Uneven work area or rough terrain.	Drive slowly and take extra caution over rough terrain.
Engine overheats.	Engine oil level is low.	Add engine oil. Refer to engine manual.
	Cooling fins are plugged.	Clean engine. Refer to engine manual.
	Engine is faulty.	Contact your Gravely dealer.
Engine runs when ignition key is in the off position.	Ignition ground wire is disconnected.	Connect ground wire to clean, metal surface.
	Ignition switch is faulty.	See your Gravely dealer.
Engine drops to low idle regardless of throttle position (Models 992519, 992530, 992531).		Restart unit. See *Stop the Engine* on page 24 and *Start The Engine on page 23*.

Unit does not drive.	Parking brake is engaged.	Release parking brake.
	Transaxles are bypassed.	Turn transaxle bypass valves to operating position. See *Move Unit Manually* on page 24.
	Transaxle drive belt is faulty.	Replace transaxle drive belt. See *Replace Transaxle Drive Belt* on page 37.
	Transaxles are faulty.	Contact your Gravely dealer.
	Transaxle drive system is faulty.	Contact your Gravely dealer.
	Hydraulic oil level is low.	Add hydraulic oil. See *Check Hydraulic System* on page 27.
PTO does not work.	Operator presence switch is not engaged.	Activate switch by sitting on seat.
	Operator presence switch is faulty.	Contact your Gravely dealer.
	PTO belt is faulty.	Replace PTO belt. See *Replace Mower Belts* on page 35.
	PTO switch, wiring, connectors or clutch are faulty.	Contact your Gravely dealer.
Unit moves with engine off and parking brake engaged.	Parking brake needs adjustment.	Adjust parking brake lever. See *Adjust Parking Brake* on page 35.
	Parking brake is faulty.	Contact your Gravely dealer.
Unit does not drive straight.	Tire pressure is incorrect.	Check tire pressure. See *Specifications* on page 48.
	Steering levers need adjustment.	See *Adjust Unit to Drive Straight* on page 35.
Unit creeps when steering levers are in neutral position.	Transaxles need adjustment.	See *Adjust Transaxles* on page 32.
	Parking brake interlock needs adjustment.	See *Adjust Parking Brake Interlock* on page 33.
Unit has poor cutting quality.	Mower blades not level or mower deck pitch is incorrect.	Level and adjust pitch of mower deck. See *Level and Pitch Mower Deck* on page 41.
	Mower blades are dull or faulty.	Sharpen or replace mower blades. See *Sharpen Blades* on page 29.
	Mowing speed is too fast.	Drive slower when cutting grass.
	Belt tension or condition is poor.	Replace PTO belt or mower drive belt. See *Replace Mower Belts* on page 35.
	Cutting height is too low.	Do not set height of cut too low. For very tall grass, mow twice.
	Clutch is faulty, damaged or slipping.	Adjust clutch or see your Gravely dealer.
Oil pressure light is illuminated.	Oil pressure is low.	Stop engine immediately and refer to engine service manual or see your Gravely dealer.
Malfunction indicator light is illuminated (Models 992519, 992530, 992531).	System has detected an engine malfunction.	Stop engine immediately and refer to engine service manual or see your Gravely dealer.

STORAGE



WARNING: AVOID INJURY. Read and understand the *Safety* section before proceeding.

SHORT-TERM STORAGE

IMPORTANT: NEVER wash unit with high-pressure water or store outdoors.

1. Allow unit to cool and clean with mild soap and water.
2. Tighten all hardware to correct specifications.
3. Inspect unit for visible signs of wear or damage. Repair as needed.
4. Prepare fuel system for storage.

NOTICE: Gravely recommends using a quality fuel stabilizer in all fuel. Gasoline left in the fuel system without a stabilizer, even

for short periods of time, deteriorates and leaves gummy deposits in the system that may cause damage. For the best effectiveness, add stabilizer to all fuel containers whenever purchasing fuel. Add the stabilizer to the container before adding fuel.

   a. Add Gravely fuel stabilizer (see *Service Parts* on page 26) or equivalent according to manufacturer's instructions to the fuel tank and any fuel containers with remaining fuel.
   b. Operate engine outdoors for at least 5 minutes to allow stabilizer to reach the carburetor.

5. Close fuel valve and allow engine to stop on its own.
6. Turn key to off position and remove from ignition.
7. Store unit in a cool, dry, protected area. DO NOT store unit outdoors.

LONG-TERM STORAGE

1. Perform short-term storage procedures.
2. Lubricate as directed in *Maintenance* on page 25.
3. Touch-up all scratched painted surfaces.
4. Remove and charge battery as directed in *Charge Battery* on page 30. Store battery in a cool, dry, protected area.
5. Store unit in a cool, dry, protected area. DO NOT store unit outdoors.

START-OF-SEASON PREPARATION

1. Before adding fuel for the first time after long-term storage, add fresh, stabilizer-treated fuel to fuel tank and any fuel containers with remaining fuel.
2. Charge and install the battery.

ACCESSORIES

See your Gravely dealer for a complete list of compatible accessories and attachments for your unit.

Shared Accessories

Description	Part No.
Gravely Seat Cover	71515500
Camo Seat Cover	71515100
52" and 60" Gravely Equipment Cover	71515300
Entry Assist Handle Kit	71801200
Backpack Sprayer	72702900
Front 6" Wheel Covers (Set of 2)	79210600
Trailer Hitch	79215800
Sunshade Hard Top ROPS Mounted Kit	79218000
Rear Tweel Kit	79220500
Electric Deck Lift Kit	79221100
12V Outlet Accessory Kit	79222700
Air Ride Seat Kit	79222800
LED Headlight Kit	79222900

Pro-Turn 500 Models

Description	Part No.
52" LaserEdge Mower Blade Kit	79219300
60" LaserEdge Mower Blade Kit	79219400
72" LaserEdge Mower Blade Kit	79219500
52" LaserEdge Mulch Blade Kit	79219900
60" LaserEdge Mulch Blade Kit	79220000
72" LaserEdge Mulch Blade Kit	79220100
52" Mulch Kit (Includes Mower Blades)	79220200
60" Mulch Kit (Includes Mower Blades)	79220300
72" Mulch Kit (Includes Mower Blades)	79405100
Lawn Striping Kit	79221800
15" Front Tweel Caster Kit (Set of 2)	79223600
Operator Controlled Discharge Baffle	79223700
52" & 60" Poly Side Grass Catcher	79404800
Northern Baffle Kit	79225200

Bagger Kits*	Part No.
3-bagger Kit	89205500
Dump-from-Seat Kit	89205400
• Kit for 52" Decks	79224900
• Kit for 60" Decks	79225000
• Kit for 72" Decks	79225100

* Bagger kits are ordered in two parts; the 3-Bagger Kit and the kit matching the deck size of the unit. Both parts are required for a complete kit.

Pro-Turn MACH ONE

Description	Part No.
LaserEdge Mulch Blade Kit	79222400

SPECIFICATIONS

Model Number	992510	992511	992512
Description	Pro-Turn 552	Pro-Turn 560	Pro-Turn 572
Engine	Kawasaki FX850	Kawasaki FX921	
Displacement – cm^3 (in^3)	852 (52)	999 (61)	
Maximum RPM – No Load	3600 +100 - 50		
Oil Capacity	Refer to engine manual.		
Liquid or Air Cooled	Air		
Electrical			
Starter	Electric		
Battery	12-Volt Maintenance-Free, 300 CCA 10U1L		
PTO (Power Take-off)	Electric PTO Clutch / Brake		
Fuel			
Tank Capacity – liter (gal)	47.9 (12.7)		
Type	Refer to engine manual.		
Transmission			
Type	Hydrostatic Drive		
Oil	HT-1000 Full-Synthetic Hydraulic Fluid (Gravely p/n 00058400)		
Hydraulic Oil Filter	Yes		
Drive Speed			
Forward Maximum – km/h (mph)	24.1 (15.0)		
Reverse Maximum – km/h (mph)	9.6 (6.0)		
Turning Radius	Zero		
Brakes	Parking		
Mower Deck			
Cutting Height – cm (in)	2.5 – 14 (1.0 – 5.5)		
Cutting Height Increments – cm (in)	0.635 (0.25)		
Cutting Width – cm (in)	132.1 (52.0)	152.4 (60.0)	183.0 (72.0)
Deck Lift	Foot Operated		
Size and Weight			
Length – cm (in)	213.4 (84.0)		219.0 (86.2)
Width – cm (in) • Discharge Chute Down • Discharge Chute Up	160.0 (63.0) 129.5 (51.0)	190.5 (75.0) 160.0 (63.0)	221.0 (87.0) 190.5 (75.0)
Height – cm (in) • With ROPS extended • With ROPS folded	193.0 (76.0) 121.4 (47.8)	193.0 (76.0) 121.4 (47.8)	
Weight – kg (lb)	660.0 (1455)	678.1 (1495)	720.3 (1588)
Tires			
Front Tire Size – in	15 x 6-6 (Semi-Pneumatic)		
Rear Tire Size – in	26 x 12-12 Radial		
Recommended Tire Pressure – kPa (psi)	83 – 103 (12 – 15)		

SPECIFICATIONS

Model Number	992515	992519
Description	Pro -Turn 500 MACH ONE	
Engine	Kawasaki FX921	Kawasaki FX1000 EFI
Displacement – cm^3 (in^3)	999 (61)	
Maximum RPM – No Load	3600 +100 - 50	
Oil Capacity	Refer to engine manual.	
Liquid or Air Cooled	Air	
Electrical		
Starter	Electric	
Battery	12-Volt Maintenance-Free, 300 CCA 10U1L	
PTO (Power Take-off)	Electric PTO Clutch / Brake	
Fuel		
Tank Capacity – liter (gal)	47.9 (12.7)	
Type	Refer to engine manual.	
Transmission		
Type	Hydrostatic Drive	
Oil	HT-1000 Full-Synthetic Hydraulic Fluid (Gravely p/n 00058400)	
Hydraulic Oil Filter	Yes	
Drive Speed		
Forward Maximum – km/h (mph)	24.1 (15.0)	
Reverse Maximum – km/h (mph)	9.6 (6.0)	
Turning Radius	Zero	
Brakes	Parking	
Mower Deck		
Cutting Height – cm (in)	2.5 – 14 (1.0 – 5.5)	
Cutting Height Increments – cm (in)	0.635 (0.25)	
Cutting Width – cm (in)	154.9 (61.0)	
Deck Lift	Foot Operated	
Size and Weight		
Length – cm (in)	219.0 (86.2)	
Width – cm (in) • Discharge Chute Down • Discharge Chute Up	190.5 (75.0) 156.5 (61.6)	
Height – cm (in) • With ROPS extended • With ROPS folded	193.0 (76.0) 121.4 (47.8)	
Weight – kg (lb)	674.0 (1486)	681 (1502)
Tires		
Front Tire Size – in	15 x 6-6 (Semi-Pneumatic)	
Rear Tire Size – in	26 x 12-12 Radial	
Recommended Tire Pressure – kPa (psi)	83 – 103 (12 – 15)	

SPECIFICATIONS

Model Number	992530	992531
Description	Pro-Turn 560 EFI	Pro-Turn 572 EFI
Engine	Kawasaki FX850 EFI	
Displacement – cm^3 (in^3)	999 (61)	
Maximum RPM – No Load	+100 / -50	
Oil Capacity	Refer to engine manual.	
Liquid or Air Cooled	Air	
Electrical		
Starter	Electric	
Battery	12-Volt Maintenance-Free, 300 CCA 10U1L	
PTO (Power Take-off)	Electric PTO Clutch / Brake	
Fuel		
Tank Capacity – liter (gal)	47.9 (12.7)	
Type	Refer to engine manual.	
Transmission		
Type	Hydrostatic Drive	
Oil	HT-1000 Full-Synthetic Hydraulic Fluid (Gravely p/n 00058400)	
Hydraulic Oil Filter	Yes	
Drive Speed		
Forward Maximum – km/h (mph)	24.1 (15.0)	
Reverse Maximum – km/h (mph)	9.6 (6.0)	
Turning Radius	Zero	
Brakes	Parking	
Mower Deck		
Cutting Height – cm (in)	2.5 – 14 (1.0 – 5.5)	
Cutting Height Increments – cm (in)	0.635 (0.25)	
Cutting Width – cm (in)	152.4 (60.0)	183.0 (72.0)
Deck Lift	Foot Operated	
Size and Weight		
Length – cm (in)	213.4 (84.0)	219.0 (86.2)
Width – cm (in) • Discharge Chute Down • Discharge Chute Up	190.5 (75.0) 160.0 (63.0)	221.0 (87.0) 190.5 (75.0)
Height – cm (in) • With ROPS extended • With ROPS folded	193.0 (76.0) 121.4 (47.8)	
Weight – kg (lb)	683.1 (1506)	729.8 (1609)
Tires		
Front Tire Size – in	15 x 6-6 (Semi-Pneumatic)	
Rear Tire Size – in	26 x 12-12 Radial	
Recommended Tire Pressure – kPa (psi)	83 – 103 (12 – 15)	

Outdoor Power Equipment Limited Warranty

AriensCo warrants to the original purchaser that Gravely brand products purchased on or after 09/01/2022 will be free from defects in material and workmanship for the time period noted in the chart below.

If any product, EXCEPT AXIS skidsteer, is rented or leased, then the duration of these warranties shall be 90 days after the date of purchase.

An authorized Gravely dealer will repair any defect in material or workmanship, and repair or replace any defective part, subject to the conditions, limitations and exclusions set forth herein. Such repair or replacement will be free of charge (labor and parts) to the original purchaser; except as noted below. Pick-up and delivery are at the owner's expense.

The warranty code is found on the model and serial number identification label on the unit.

Warranty Code	Product Group	Warranty Period
AA	Serialized Attachments	1 Year.**
AB	Serialized Attachments	2 Years.**
CH	Pro-Turn® Z and Pro-Turn ZX Mowers	4 Years or 750 Hours.*
CJ	Pro-QXT®	4 Years or 500 Hours.*
CK	Compact-Pro® and Pro-Walk® Hydro Mowers	4 Years or 750 Hours.* No Hour Limit for First 2 Years.
CL	Pro-Turn 100 and Pro-Stance® Mowers	5 Years or 1000 Hours.* No Hour Limit for First 2 Years.
CM	Pro-Turn 200 and 300 Mowers	5 Years or 1250 Hours.* No Hour Limit for First 2 Years.
CN	Pro-Turn 500, 600, Mach-One and Pro-Stance Ultra Mowers	5 Years or 1500 Hours.* No Hour Limit for First 2 Years.
CS	AXIS® Skidsteer	1 Year or 1000 Hours.* Includes Rented or Leased Products.
CT	OVIS Mowers	2 Years or 250 Hours.*
HE	ZT Mowers	2 Years or 150 Hours.*
HF	ZT X Mowers	3 Years or 300 Hours.*
HG	ZT XL Mowers	4 Years or 400 Hours.*
HH	ZT HD and Z-Stance Mowers	4 Years or 500 Hours.*
UG	Atlas JSV®	1 Year.

* Whichever comes first.

** AXIS Attachments see Limitations chart below.

Special Extensions

The chart below details special **extensions** to warranty terms. Warranty terms are total time periods covered. If any product is rented or leased, there are no extensions to the 90-day warranty.

Warranty Code	Warranty Term Extension	Warranty Period	Detail
CL, CM, CN	Mower Deck Shell and Main Frame	Lifetime Limited.	Warranty is for parts only after the initial warranty period. Components are covered for manufacturer's defect only, not wear.

Exclusions and Limitations

The charts below detail special **exclusions and limitations** to this warranty.

Warranty Term Exclusions	Warranty Period
Air filters, brake arms, brake linings, brake shoes, brushes, cutters, fuel filters, halogen headlights, knives, halogen light bulbs, lubricants, mower blades, flail blades, oil, oil filters, spark plugs, scraper blades, shear bolts, skid shoes and spoon tines.	Components are not covered under warranty.

Hydro-Gear Transaxle Limitation
See Hydro-Gear warranty. The warranty is administrated by AriensCo. Refer to www.gravely.com for warranty statement.

Warranty Term Limitations	Warranty Period
Cloth, Plastic and Rubber Components. Mufflers, Tires and Belts.	Components are covered for manufacturer's defect only, not wear.
AXIS Bucket and Fork Attachments	Warranty is administered by Erskine Attachments, LLC. Follow Erskine warranty statement in back of Attachment Operator's Manual.

Exclusions – Items Not Covered by This Warranty

- Parts that are not genuine Gravely service parts are not covered by this warranty and may void the warranty if the parts result in premature wear or damage to the product.
- Damages resulting from the installation or use of any part, accessory, or attachment which is not approved by the AriensCo for use with product(s) identified herein are not covered by this warranty.
- Any misuse, alteration, improper assembly, improper adjustment, neglect, or accident which requires repair is not covered by this warranty.
- Repairs or adjustments required due to failure to use fresh fuel or failure to properly prepare the unit for periods of non-use.
- **Use of gasoline blends exceeding 10% ethanol voids any and all warranties.**
- **Any tampering with the hour meter voids any and all warranties.**
- Products are designed to the specifications in the area that the product was originally distributed. Different areas may have significantly different legal and design requirements. This warranty is limited to the requirements in the area in which the unit was originally distributed. AriensCo does not warrant this product to the requirements of any other area. Warranty service is limited to service within the area originally distributed.
- In countries other than the United States and Canada, contact the AriensCo dealer for warranty policies that govern within your country. Rights may vary from country to country and within any one country.

Evaporative Emissions Control Warranty Exception

As required by the California Air Resources Board (CARB) and the US Environmental Protection Agency (EPA) the evaporative emissions control system is warranted to the ultimate purchaser, and any subsequent owner, for two years.

The CARB and EPA evaporative emissions control system warranty is described in a separate evaporative emission control warranty statement.

Special Exclusions for Job-site Vehicles

The following uses void the warranty terms on Atlas JSV (Warranty Code UG) vehicles:

- Renting or leasing the vehicle.
- Using the vehicle to tow or carry loads in excess of the limits specified in the operator's manual.
- Modifying the vehicle with parts and accessories that are not genuine or authorized Gravely parts or accessories.
- Modifying the vehicle without express written authorization from Gravely.
- Operating the vehicle when it has not been completely and properly assembled and pre-delivered by an authorized Gravely dealer.

Battery Warranty

Battery warranty is one year. Units used for rental or lease have no exceptions to the 90-day warranty. Total battery claim reimbursement will not exceed 45.00 USD.

Transmissions

The chart below details transmission warranty information. Transmission warranty terms may vary from the specific terms of this warranty. If inconsistent, the terms of the transmission warranty shall apply to the transmission and its component parts.

Transmission Manufacturer	Detail
Hydro-Gear Transaxle	See Hydro-Gear warranty. The warranty is administrated by AriensCo. Refer to www.gravely.com for warranty statement.
Parker Hannifin Drive & Valve Systems	Parker Transaxles, Pumps, Wheel Motors and Valves are warranted for the length of equipment warranty period. Refer to Warranty Code chart above. Warranty is administered by AriensCo.

Engines

The chart below details engine warranty information. Engine warranty terms may vary from the specific terms of this warranty. If inconsistent, the terms of the engine warranty shall apply to the engine and its component parts.

Engine Manufacturer	Detail	
Gravely V-Twin	Serial Number 0000400 and lower	4 Years or 500 Hours, whichever comes first. Refer to www.gravely.com for warranty statement.
	Serial Number 0000401 and higher	4 Years or 750 Hours, whichever comes first. Refer to www.gravely.com for warranty statement.
Yamaha	Yamaha-branded engines are warranted by the manufacturer and the warranty is administrated by AriensCo. Refer to www.gravely.com for warranty statement.	
Briggs & Stratton, Kawasaki, Kohler, Kubota	Covered by the engine manufacturer's warranty. Refer to the engine manufacturer's warranty statements.	

Parts and Accessories

Service replacement parts and non-serialized accessories are warranted for 90 days from date of purchase. Labor is not included.

Customer Responsibilities

Register the product immediately at the time of sale. If the dealer does not register the product, the customer must register the unit on-line at www.gravely.com.

To obtain warranty service, the **original purchaser** must:

- Ensure that the maintenance and adjustments explained in the Operator's Manual are routinely completed.
- Promptly notify AriensCo or an authorized Gravely service representative of the need for warranty service.
- Transport the product to and from the place of warranty service at owner's expense.
- Have the warranty service performed by an authorized Gravely service representative.

To find an authorized dealer use the dealer locator on our websites, or contact us by mail or phone.

Globally except Australia or New Zealand:	Australia:	New Zealand:
AriensCo 655 W. Ryan Street Brillion, WI 54110 Phone: (920) 756 - 4688 www.gravely.com	Roy Gripske & Sons Pty Ltd 11 Sodium Street Narangba Queensland 4504 Australia Phone: (61130) 036 3004 www.rgs.com.au	Masport Ltd 320 Ti Rakau Drive East Tamaki Auckland 2013 New Zealand Phone: 0800 627 7678 www.masport.co.nz

Disclaimer

AriensCo may from time to time change the design of its products. Nothing contained in this warranty shall be construed as obligating the AriensCo to incorporate such design changes into previously manufactured products, nor shall such changes be construed as an admission that previous designs were defective.

Limitation of Remedy and Damages

AriensCo liability under this warranty, and under any implied warranty that may exist, is limited to repair of any defect in workmanship, and repair or replacement of any defective part. AriensCo shall not be liable for incidental, special, or consequential damages (including lost profits). Some states do not allow the exclusion of incidental or consequential damages, so the above limitation or exclusion may not apply to you.

AriensCo shall not be held liable for damages, including premature wear and tear, or injuries caused by installation of unauthorized parts and accessories or for parts and accessories not installed by an authorized Gravely dealer.

Australian Consumer Law

The following applies solely to warranties subject to Subsection 102(1) of the Australian Consumer Law: Our goods come with guarantees that cannot be excluded by the Australian Consumer Law. You are entitled to a replacement or refund for a major failure and for compensation for any other reasonably foreseeable loss or damage. You are also entitled to have the goods repaired or replaced if the goods fail to be of acceptable quality and failure does not amount to a major failure.

Disclaimer of Further Warranty

AriensCo makes no warranty, express or implied, other than what is expressly made in this warranty. If the law of your state provides that an implied warranty of merchantability, or an implied warranty of fitness for particular purpose, or any other implied warranty, applies to AriensCo then any such implied warranty is limited to the duration of this warranty. Some states do not allow limitations on how long an implied warranty lasts, so the above limitation may not apply to you.

This warranty gives you specific legal rights, and you may also have other rights which vary from region to region.

GRAVELY

655 West Ryan St.
Brillion, WI 54110

www.gravely.com

GENUINE OEM PARTS

parts.gravely.com

WARNING: Cancer and Reproductive Harm - www.P65Warnings.ca.gov

ARIENS|CO

PRINTED in WISCONSIN