Installer: Leave this manual with the appliance. Consumer: Retain this manual for future reference.

Mr. Heater

OPERATING INSTRUCTIONS AND OWNER'S MANUAL

READ INSTRUCTIONS CAREFULLY: Read and follow all instructions. Place instructions in a safe place for future reference. Do not allow anyone who has not read these instructions to assemble, light, adjust or operate the heater.

Plaque Heaters

MHVFR20TB NG
(BLOWER INCLUDED)
MHVFR20T NG
(BLOWER SOLD SEPARATELY)

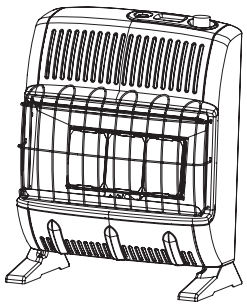

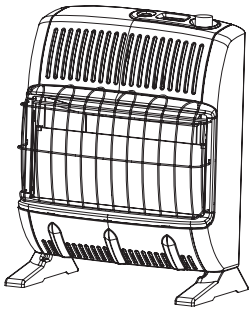

Blue Flame Heaters

MHVFB20TB NG
(BLOWER INCLUDED)
MHVFB20T NG
(BLOWER SOLD SEPARATELY)

MHVFR30TB NG
(BLOWER INCLUDED)
MHVFR30T NG
(BLOWER SOLD SEPARATELY)

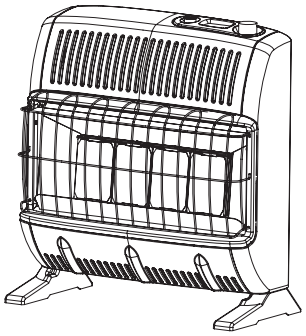

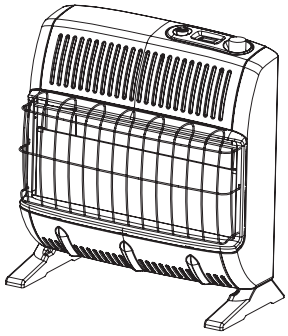

MHVFB30TB NG
(BLOWER INCLUDED)
MHVFB30T NG
(BLOWER SOLD SEPARATELY)

UNVENTED NATURAL GAS FIRED ROOM HEATER

⚠ **WARNING:** If the information in this manual is not followed exactly, a fire or explosion may result causing property damage, personal injury, or loss of life.

- Do not store or use gasoline or other flammable vapors and liquids in the vicinity of this or any other appliance.
- WHAT TO DO IF YOU SMELL GAS
  - Shut off gas supply
  - Do not try to light any appliance
  - Do not touch an electrical switch; do not use any phone in your building.
  - Immediately call your gas supplier from a neighbor's phone. Follow the gas supplier's instructions.
  - If you cannot reach your gas supplier, call the fire department.
- Installation and service must be performed by a qualified installer, service agency, or the gas supplier.

⚠ **WARNING**: This is an unvented gas-fired heater. It uses air (oxygen) from the room in which it is installed. Provisions for adequate combustion and ventilation air must be provided. Refer to Fresh Air for Combustion and Ventilation section on page 4 of this manual.

⚠ **WARNING**: Improper installation, adjustment, alteration, service or maintenance can cause injury or property damage. Refer to this manual for correct installation and operational procedures. For assistance or additional information consult a qualified installer, service agency, or gas supplier.

MR. HEATER, INC., 4560 W. 160TH ST., CLEVELAND, OHIO 44135 800-251-0001 02/14 70808 2015 JM

This appliance may be installed in an aftermarket* permanently manufactured (mobile) home, where not prohibited by local codes. This appliance is only for use with the type of gas indicated on the rating plate. This appliance is not convertible for use with any other gas.

*Aftermarket completion of sale, not for the purpose of resale, from the manufacturer.

⚠WARNINGS

IMPORTANT: Read this owner's manual carefully and completely before trying to assemble, operate, or service this heater. Improper use of this heater can cause serious injury or death from burns, fire, explosion, electrical shock, and carbon monoxide poisoning.

⚠WARNING: This appliance is equipped for (natural or propane) gas. Field conversion is not permitted.

⚠WARNING: Do not use any accessory not approved for use with this heater.

⚠WARNING: Any change to this heater or its controls can be dangerous.

- Do not place clothing or other flammable material on or near the appliance. Never place any objects on the heater.
- Due to high temperatures, heater should be kept out of traffic and away from furniture and draperies.
- Surface of heater becomes very hot when running. Keep children and adults away from hot surfaces to avoid burns or clothing ignition. Heater will remain hot for a time after shutdown. Allow heater surfaces to cool before handling.
- Young children should be carefully supervised when they are in the same room with heater.
- Make sure grille guard is in place before running heater. If screen or grille guard is removed for servicing it must be replaced prior to operating the heater.
- Keep the appliance area clear and free from combustible materials, gasoline, and other flammable vapors and liquids.

CONTENTS

WARNINGS 2
SPECIFICATIONS 3
PRECAUTIONS 3
IGNITION SYSTEM BATTERY INSTALLATION 4
BLOWER FAN CONTROL SWITCH OPERATION 4
DETERMINING THE TYPE OF HEATER LOCATION SPACE 5
INSTALLATION 6
FASTENING HEATER TO WALL 7
FLOOR MOUNTING AWAY FROM WALL 8
CONNECTING TO GAS SUPPLY 8
OPERATING YOUR HEATER 10
CLEANING AND MAINTENANCE 11
TROUBLESHOOTING 14
EXPLODED-VIEW PARTS DRAWING 16
PARTS LIST 17
WARRANTY 20

SPECIFICATIONS

	IR20TB/IR20T NG	IR30TB/IR30T NG	BF20TB/BFz NG	BF30TB/BF30T NG
BTU (Available)	20,000	30,000	20,000	30,000
Type of Gas	Natural Gas Only	Natural Gas Only	Natural Gas Only	Natural Gas Only
Ignition	Battery ignitor (1-AA)	Battery ignitor (1-AA)	Battery ignitor (1-AA)	Battery ignitor (1-AA)
Pressure Regulator Setting	4.5 Inches of Water	5.0 Inches of Water	4.5 Inches of Water	4.5 Inches of Water
Inlet Gas Pressure (Maximum)	14 Inches of Water	14 Inches of Water	14 Inches of Water	14 Inches of Water
Inlet Gas Pressure (Minimum)	7 Inches of Water	7 Inches of Water	9 Inches of Water	9 Inches of Water
Electrical Rating/Blower	120V, 60Hz, 1 Ø	120V, 60Hz, 1 Ø	120V, 60Hz, 1 Ø	120V, 60Hz, 1 Ø
Burners / Orifice nozzles	3	4	1	1
Thermostatic Control	Yes	Yes	Yes	Yes
Clearances: inches (mm)				
Top	36” (915cm)	36” (915cm)	36” (915cm)	36” (915cm)
Sides	10” (254cm)	10” (254cm)	10” (254cm)	10” (254cm)
Floor (min to top of carpet)	3” (76cm)	3” (76cm)	3” (76cm)	3” (76cm)
Fabric / flammable objects	36” (915cm)	36” (915cm)	36” (915cm)	36” (915cm)

PRECAUTIONS:

1. BF-20 NGT, BF-30 NGT, IR-20 NGT and IR-30 NGT may not be installed in a bedroom or bathroom, or any place where a strong wind would shut down the appliance.
2. This heater needs outside ventilation air to run properly. The Oxygen Depletion Sensor (ODS) safety shutoff system shuts down the heater if not enough fresh air is available. See *Fresh Air for Combustion and Ventilation*, pages 4 through 6.
3. Keep all air openings in heater clear, free of debris or any blockage. This will insure that enough air for proper combustion enters the heater.
4. If heater shuts off, do not relight until you provide fresh, outside air. If heater keeps shutting off, it requires servicing.
5. Turn off and unplug heater and let cool before servicing. Only a qualified service person should service and repair heater.
6. Do not run heater:
   - Where flammable liquids or vapors are used or stored
   - During dusty conditions.
7. Before using furniture polish, wax, carpet cleaner or similar products, turn heater off. If heated the vapors from these products may create a white powder residue within burner box or on adjacent walls or furniture.
8. Do not use heater if any part has been underwater. Immediately call a qualified service technician to inspect the room heater and to replace any part of the control system and any gas control which has been underwater.
9. Operating heater above elevations of 4,500 feet could cause pilot/ODS to shutdown heater.
10. Always run heater with control knob in a locked position. Never set control knob between locked positions. Poor combustion and higher levels of carbon monoxide may result if control knob is left between locked positions.

DANGER: Carbon monoxide poisoning may lead to death.

Carbon Monoxide Poisoning:

Early signs of carbon monoxide poisoning resemble the flu, with headaches, dizziness, or nausea. If you have these signs, the heater may not be working properly. Get fresh air at once! Have heater serviced. Some people are more affected by carbon monoxide than others. These include pregnant women, persons with heart or lung disease or anemia, those under the influence of alcohol, and those at high altitudes.

Natural Gas:

Raw natural gas is odorless. An odor making agent is added to natural gas, which helps you detect a natural gas leak. However the odor added to natural gas can fade. So natural gas may be present even though no odor is detected. Make certain you read and understand all warnings. Keep this manual for reference. It is your guide to safe and proper operation of this heater.

Product Features

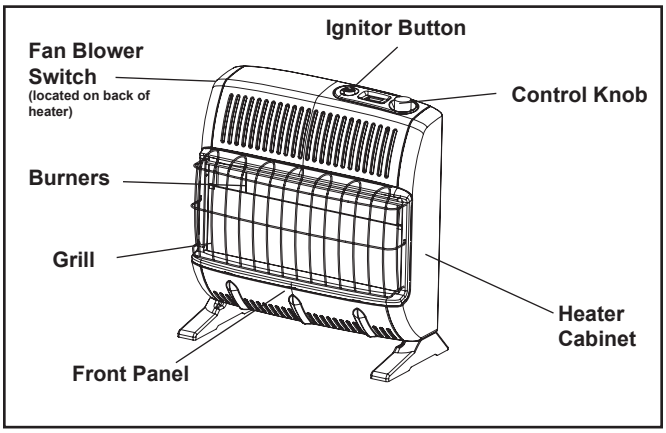

*Blower not included on all units

Figure 1

SAFETY DEVICE

This heater has a pilot with an Oxygen Depletion Sensor (ODS) safety shut off system. The ODS/pilot shuts off the heater if there is not enough fresh air.

IGNITION SYSTEM / BATTERY INSTALLATION

– The heater is equipped with an electronic manual ignitor. This system requires no matches, or other source to light heater, but does require one AA battery to operate ignitor. **(AA Battery included)**.

To install or replace battery unscrew the ignitor cap (red button), insert battery positive (+) terminal up and replace cap.

(AA Battery included)

THERMOSTATIC CONTROL

These heaters have a control valve with a thermostat sensing bulb. This results in the greatest heater comfort and may result in lower bills.

BLOWER FAN CONTROL SWITCH OPERATION

On models equipped with an electrical blower. The blower switch has three positions: MANUAL, OFF and AUTO. In AUTO, the blower will turn on and off as the heater cycles on and off. On MANUAL, the blower will run continuously. To turn blower off, use the OFF position.

LOCAL CODES

Install and use heater with care.

Installation must conform to local codes or in the absences of local codes, use the latest edition of National Fuel Gas Code ANSI Z223.1/NFPA 54.

UNPACKING

1. Remove heater from carton.
2. Remove all protective packaging applied to heater for shipment.
3. Check heater for any shipping damage. If heater is damaged, promptly inform dealer where you bought heater.

FRESH AIR FOR COMBUSTION AND VENTILATION

⚠ **WARNING**: This heater shall not be installed in a confined space or unusually tight construction unless provisions are provided for adequate combustion and ventilation air. Read the following instructions to insure proper fresh air for this and other fuel-burning appliances in your home.

ESTABLISHING ADEQUATE VENTILATION

The following are excerpts from *National Fuel Gas Code, NFPA 54/ ANSI Z223.1, Section 5.3, Air for Combustion and Ventilation*. All spaces in homes fall into one of the three following ventilation classifications:

1. Unusually Tight Construction
2. Unconfined Space
3. Confined Space

This heater must not be installed in a confined space or unusually tight construction unless provisions are provided for adequate combustion and ventilation air. The information on pages 4 through 6 will help you classify your space and provide adequate ventilation.

Unusually Tight Construction

If your home meets all of the three following criteria you must provide additional fresh air. See *Ventilation Air from Outdoors*, page 6.

Unusually tight construction is defined as construction where:

a. Walls and ceilings exposed to the outside atmosphere have a continuous water vapor retarder with a rating of one perm (6×10^{-11} kg per pa-sec-m^2) or less with openings gasketed or sealed and

b. Weather stripping has been added on operable windows and doors, and

c. Caulking or sealants are applied to areas such as joints around windows and door frames, between wall-ceiling joints, between wall panels, at penetrations for plumbing, electrical, and gas lines, and at other openings.

If your home does not meet all of the three criteria above, see *Determine the Type of Heater Location Space*, page 5.

Confined Space and Unconfined Space

The *National Fuel Gas Code, NFPA 54/ ANSI Z223.1* defines a confined space as a space whose volume is less than 50 cubic feet per 1,000 Btu per hour (4.8 m^3 per kW) of the aggregate input rating of all appliances installed in that space, and an unconfined space as a space whose volume is not less than 50 cubic feet per 1,000 Btu per hour (4.8 m^3 per kW) of the aggregate input rating of all appliances installed in that space. Rooms communicating directly with the space in which the appliances are installed*, through openings not furnished with doors, are considered a part of the unconfined space.

*Adjoining rooms are communication only if there are odorless passageways or ventilation grills between them.

DETERMINING THE TYPE OF HEATER LOCATION SPACE:

Use this method to determine if you have a confined or unconfined space.

Note: the space includes the room in which you install heater plus any adjoining rooms with doorless passageways or ventilation grills between the rooms.

1. Find the volume of the space by multiplying room length x width x height.

Example: Space size 18ft (length) x 18ft. (width) x 8ft. (height) = 2592

If additional ventilation to adjoining room is supplied with grills or openings, add the volume of these rooms to the total volume of the space.

2. Divide the space volume by 50 cubic feet to determine the maximum Btu/hr the space can support.

Example: 2592 cu.ft. (volume of space) / 50 cu.ft. = 51.8 or 51,800 (maximum Btu/hr the space can support)

> ⚠ **WARNING:** If the area in which the heater may be operated is smaller than defined as an unconfined space or if the building is of unusually tight construction, provide adequate combustion and ventilation air by the methods described in the *National Fuel Gas Code, NFPA 54/ ANSI Z223.1,* Section 5.3 or applicable local codes.

3. Add the Btu/hr of all the fuel-burning appliances in the space such as, Vent–free heater, Gas water heater, Gas furnace, Vented gas heater, Gas fireplace logs, and Other gas appliances*

*Do not include direct-vent gas appliances. Direct-vent draws combustion air from the outdoors and vents to the outdoors.

Example:	Gas water heater	40,000 Btu/hr
	Vent Free Heater +	20,000 Btu/hr
	Total	=60,000 Btu/hr

4. Compare the maximum Btu/hr the space can support with the actual amount of Btu/hr used.

Example: 51,800 Btu/hr (maximum Btu/hr the space can support)

60,000 Btu/hr (Actual amount of Btu/hr used)

The space in the above example is a confined space because the actual Btu/hr used is more than the maximum Btu/hr the space can support.

You must provide additional fresh air. Your options are as follows:

A. Rework worksheet, and the space of an adjoining room. If the extra space provides an unconfined space, remove door to adjoining room or add ventilation grills between the rooms. See Ventilation Air From Inside Building (Figure 2).

B. Vent room directly to the outdoors. See Ventilation Air From Outdoors (Figure 3).

C. Install a lower Btu/hr heater if lower Btu/hr size makes room unconfined.

If actual Btu/hr used is less than the maximum Btu/hr the space can support, the space is an unconfined space. You will need no additional fresh air ventilation.

VENTILATION AIR

Ventilation from Inside Building

This fresh air would come from an adjoining unconfined space. When ventilation to an adjoining unconfined space, you must provide two permanent openings: one within 12” of the ceiling and one within 12” of the floor on the wall connecting the two spaces (see options 1 & 2 of fig. 2). You can also remove door into adjoining room (see option3, fig 2). Follow the National Fuel Gas Code NFPA 54/ ANSI Z223.1, Section 5.3, Air for Combustion and Ventilation for required size of ventilation grills or ducts.

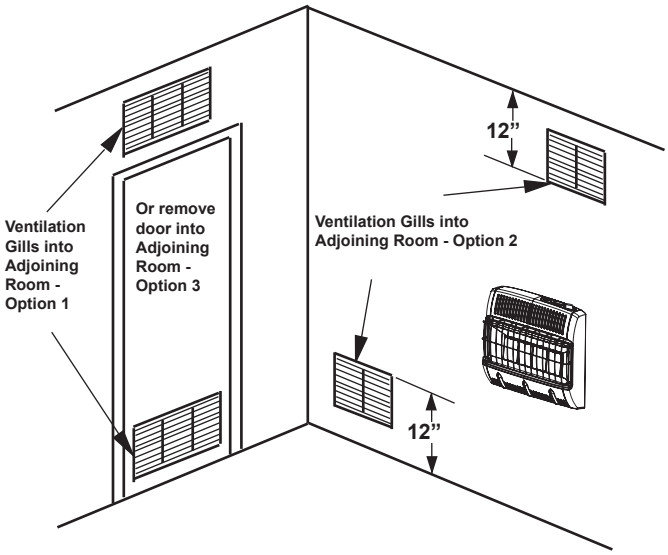

Figure 2.

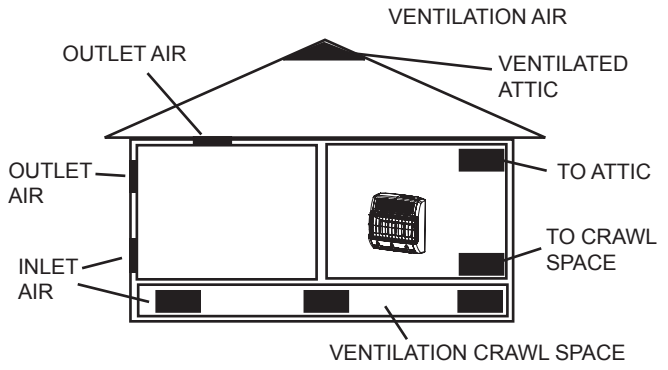

Figure 3.

⚠ **WARNING:** Rework worksheet, adding the space of the adjoining unconfined space. The combined space must have enough fresh air to supply all appliance in both spaces.

Ventilation from Outdoors

If necessary provide extra fresh air by using ventilation grills or ducts. Connect these items directly to the outdoors or spaces open to the outdoors. These include attics* and crawl spaces. Follow the National Fuel Gas Code NFPA 54/ ANSI Z223.1, Section 5.3, Air for Combustion and Ventilation for required size of ventilation grills or ducts.

***IMPORTANT:** Do not provide openings for inlet or outlet into attic. If attic has a thermostat-controlled power vent, heated air entering the attic will activate the power vent.

IMPORTANT: Vent-free heaters add moisture to the air. Although this is beneficial, installing heater in rooms without enough ventilation air may cause mildew to form from too much moisture. See Fresh Air for Combustion and Ventilation, pages 4 through 6.

INSTALLATION

NOTICE: This heater is intended for the use as supplemental heat. Use this heater along with your primary heating system. Do not install this heater as your primary heat source. If you have a central heating system, you may run system's circulating blower while using heater. This will help circulate the heat throughout the house. In the event of a power outage, you can use this heater as your primary heat source for the duration of the outage.

⚠ **WARNING:** A qualified service person must install heater. Follow all local codes.

CHECK GAS TYPE

Use only *natural gas.* If your gas supply is not *natural gas*, do not install heater. Call dealer where you bought heater for proper type heater.

THIS INSTALLATION REQUIRES:

Before installing heater, make sure you have the items listed below:

- Piping (check local codes)
- Sealant (resistant to natural gas)
- Equipment shutoff valve*
- Ground joint union
- Test gauge connection*
- Sediment trap
- Tee joint
- Pipe wrench

*A CSA/AGA certified equipment shutoff valve with 1/8" NPT tap is an acceptable alternative to test gauge connection. Purchase a CSA/AGA certified equipment shutoff valve from your dealer.

LOCATING HEATER

This heater is designed to be mounted on the wall. The heater can also be located on a non-combustible floor, away from a wall by using the floor mounting stands included with the heater. If installed on combustible flooring such as carpeting, tile or other combustible material other than wood flooring, the heater must be placed on a wood panel the full width and depth of the appliance.

For convenience and efficiency, install the heater:

- Where there is easy access for operation, inspection, and service
- In the coldest part of the room.
- If planning to use fan, locate heater near an electrical outlet.

CAUTION: If you install the heater in a home garage: Heater pilot and burner must be at least 18 inches above floor. Locate heater where moving vehicle will not hit it.

CAUTION: This heater creates warm air currents. These currents move heat to wall surfaces next to heater. Installing heater next to vinyl or cloth wall covering or operating heater where impurities (such as tobacco smoke, aromatic candles, cleaning fluids, oil or kerosene lamps, etc.) are present in the air may discolor walls.

⚠ **WARNING:** Never install the heater:

- In a bedroom (IR20NGT, IR30NGT, BF20NGT or BF30NGT)
- In a recreational vehicle·.
- Where curtains, furniture, clothing, or other flammable objects are less than 36 inches from the front, top, or sides of the heater.
- As a fireplace insert
- In high-traffic areas
- In windy or drafty areas

⚠ **WARNING:** Heater must be mounted to maintain the minimum clearances shown in Figure 4. If possible, provide greater clearances from the floor, ceiling, and joining walls.

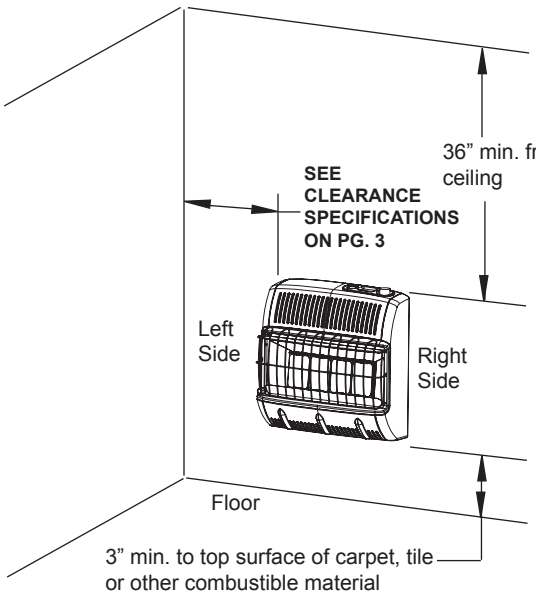

Figure 4

FASTENING HEATER TO WALL

Mounting Bracket

The mounting bracket in located on the back panel of heater (see figure 5). It has been taped there for shipping. Remove mounting bracket from back panel.

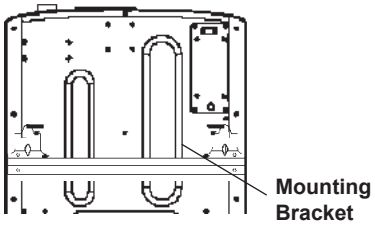

Figure 5

Removing Front Panel of Heater

1. Remove three screws on bottom front of front panel.
2. Pull bottom of front panel forward, then down (see figure 6)

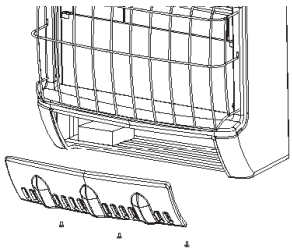

Figure 6

Attaching Mounting Bracket to Wall

Use holes on each end of mounting bracket to attach bracket to wall. These holes are 16 inches apart. Attach mounting bracket to wall in one of two following ways.

1. Attach to wall studs
2. Attach to wall anchor

Attaching to Wall Stud:

This way is the best providing the strongest mounting in wood frame houses.

Attaching to Wall Anchor:

This way allows you to attach mounting bracket to hollow walls (wall areas between studs) or to solid walls (concrete or masonry).

Decide which way best suits your needs. Either method will provide a secure hold for the mounting bracket.

1. Tape mounting bracket to wall where heater will be located. Make sure mounting bracket is level. For wall stud mounting locate one end of the mounting bracket over a wall stud.

> ⚠ **WARNING:** Maintain minimum clearances shown in figure 7. If you can, provide greater clearances from the floor and joining wall.

2. Mark screw locations on wall (see figure 7).
3. Remove tape and mount bracket from wall.

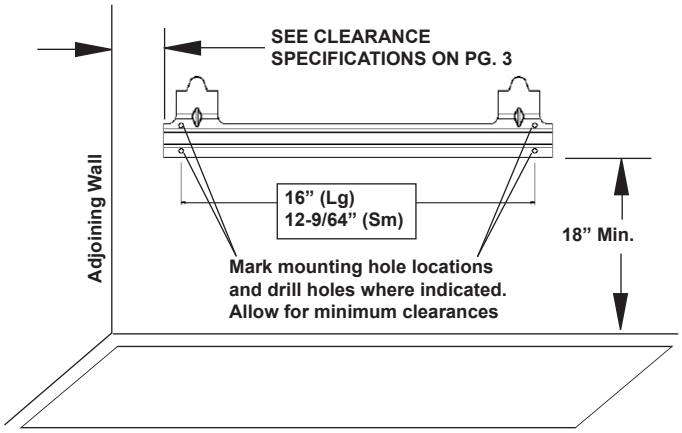

Figure 7

Attaching to Wall Stud:

For attaching mounting bracket to wall studs

1. Drill holes at marked locations using 9/64” drill bit.
2. Place mounting bracket onto wall. Line up holes on each end of bracket with hole drilled in wall.
3. Insert mounting screws through bracket and into wall studs.
4. Tighten screws until mounting bracket is firmly fastened to wall studs.

Attaching to Wall using Anchor:

For attaching mounting bracket to hollow walls (wall areas between studs) or solid walls (concrete or masonry)

Note: Wall anchors, mounting screws, and spacer are in hardware package. The hardware package is provided with heater.

1. Drill holes at marked locations using 5/16” drill bit. For solid walls (concrete or masonry), drill at least 1” deep.
2. Fold wall anchor as shown in figure 8 below.

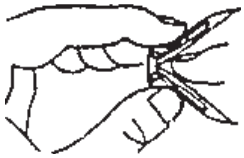

Figure 8.

3. Insert wall anchor (wings first) into hole. Tap anchor flush to wall.
4. For thin walls (1/2” or less) insert red key into wall anchor.
5. Place mounting bracket onto wall. Line up holes on each end of bracket with wall anchors.
6. Insert mounting screws through bracket and into wall anchors.
7. Tighten screws until mounting bracket is firmly fastened to wall.

Placing Heater on Mounting Bracket

1. Locate two horizontal slots on back pane of heater (see figure 9).
2. Place heater onto mounting bracket. Slide horizontal slots onto stand-out tabs on mounting bracket.

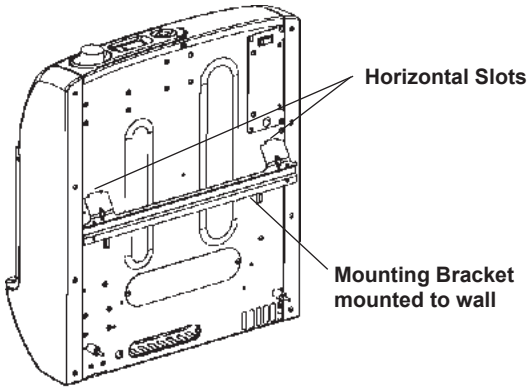

Figure 9.

Installing Bottom Mounting Screws

1. Locate two bottom mounting holes. These holes are near bottom on back panel of heater (see figure 10).

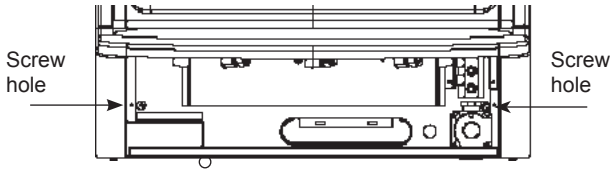

Figure 10

2. Mark screws locations on wall.
3. Remove heater from mounting bracket.
4. If installing bottom mounting screw into hollow or solid wall, install wall anchors. Follow steps 1 through 4 under Attaching to Wall using Anchor. If installing bottom mounting screw into wall stud, drill holes at marked locations using 9/64” drill bit.
5. Re-place heater onto mounting bracket.
6. Place spacers between bottom mounting holes and wall anchor or drilled hole.
7. Hold spacer in place with one hand. With the other hand, insert mounting screw through bottom mounting hole and spacer. Place tip of screw in opening of wall anchor or drilled hole.
8. Tighten both screws until heater is firmly secured to wall. Do not over tighten.

Note: Do not re-place front panel at this time. Replace front panel after making gas connections and checking for leaks.

FLOOR MOUNTING AWAY FROM WALL:

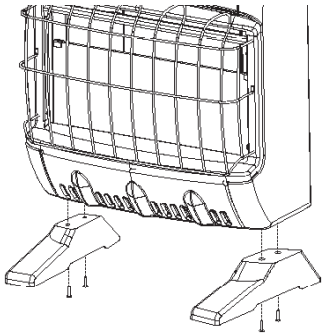

Figure 11

Installing Support Feet (see figure 11)

1. Lay heater onto table on its back with bottom edge overhanging table edge.
2. Securely attach feet to bottom of heater using 2 – self-tapping screws each.

Note: Feet should have long end going out the front of heater, and the edge coinciding with side of heater. If feet overhang side of the heater, switch leg location.

3. Place heater on non-combustible surface (see Locating Heater above) before proceeding with gas connection. If this will be a permanent location, heater may be locked into position using anchoring holes in mounting feet.

Note: Use of floor mounting feet will require you to use a 3/8 NPT street elbow to make gas connection.

CONNECTING TO GAS SUPPLY

⚠ **WARNING:** A qualified service person must connect heater to gas supply. Follow all local codes.

⚠ **WARNING:** This appliance requires a 3/8” NPT (National Pipe Thread) inlet connection to the pressure regulator. Use of floor mounting feet will require you to use a 3/8 NPT street elbow to make gas connection.

CAUTION: Never connect heater to private (non-utility) gas well. This gas is commonly known as well-head gas.

IMPORTANT: Check your gas line pressure before connecting heater to gas line. Gas line pressure must be no greater than 14 inches of water. If gas line pressure is higher, heater regulator damage could occur.

CAUTION: Use only new black iron or steel pipe. Internally-tinned copper tubing may be used in certain areas. Check your local codes. Use pipe of larger enough diameter to allow proper gas volume to heater. If pipe is too small, undue loss of pressure will occur.

Installation must include an equipment shutoff valve, union and plugged 1/8” NPT tap. Locate NPT tap within reach of test gauge hookup. NPT tap must be upstream from heater (see figure 12).

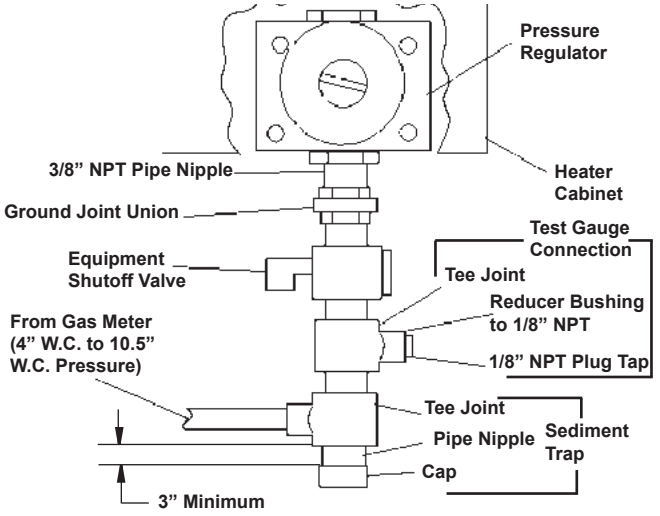

Figure 12

*A CSA/AGA certified equipment shutoff valve with 1/8” NPT tap is an acceptable alternative to test gauge connection. Purchase the CSA/AGA certified equipment shutoff valve from your dealer. See Accessories, page 17.

IMPORTANT: Install an equipment shutoff valve in an accessible location. The equipment shutoff valve is for turning on or shutting off the gas to the appliance.

Apply pipe joint sealant lightly to male threads. This will prevent excess sealant from going into pipe. Excess sealant in pipe could result in clogged heater fuel train.

CAUTION: Use pipe joint sealant that is resistant to *natural gas*.

Install sediment trap in supply line as shown in figure 12. Locate sediment trap where it is within reach for cleaning. A sediment trap traps moisture and contaminants. This keeps them from going into heater. If sediment trap is not installed or is installed improperly, heater may not run correctly.

IMPORTANT: Hold pressure regulator with wrench when connecting it to gas piping and/or fittings.

CHECKING GAS CONNECTIONS

⚠ **WARNING:** Test all gas piping and connections for leaks after installing or servicing. Correct all leaks at once.

⚠ **WARNING:** Never use an open flame to check for a gas leak. Apply a mixture of liquid soap and water to all joints. Bubbles forming show a leak. Correct all leaks at once.

PRESSURE TESTING GAS SUPPLY PIPING SYSTEM

Test pressure in Excess of ½ psig (3.5kPa)

1. Disconnect appliance with its appliance main gas valve (control valve) and equipment shutoff valve from gas supply piping system. Pressures in excess of ½ psig will damage heater regulator.
2. Cap off open end of gas pipe where equipment shutoff valve was connected.
3. Pressurize supply piping system by either using compressed air or opening main gas valve on or near gas meter.
4. Check all connections and joints in gas supply piping system. Apply mixture of liquid soap and water to gas joints. Bubbles forming show a leak.
5. Correct all leaks at once.
6. Depressurize and relieve pressure in supply piping system.
7. Reconnect heater and equipment shutoff valve to gas supply.
8. Reconnected fittings must be checked for leaks in next section.

Test Pressure Equal To or Less Than ½ psig (3.5 kPa)

1. Close equipment shutoff valve (see figure 13).
2. Pressurize supply piping system by either using compressed air or opening main gas valve on or near gas meter.
3. Check all joints from the gas meter to equipment shutoff valve (see figure 14). Apply mixture of liquid soap and water to gas joints. Bubbles forming show a leak.
4. Correct all leaks at once.
5. Depressurize and relieve pressure from supply piping system.

Pressure Testing Heater Gas Connections:

1. Make sure that the heater supply piping system is connected and has been leak tested as described above.
2. Make sure control knob of heater is in OFF position.
3. Open equipment shutoff valve (see figure 13).
4. Open main gas valve on or near gas meter.
5. Check all joints from equipment shutoff valve to control valve (see figure 14). Apply mixture of liquid soap and water to gas joints. Bubbles forming show a leak.
6. Correct all leaks at once.
7. Light heater (see *Operating Your Heater*, pages 10 and 11. Check the rest of the internal joints for leaks.
8. Turn off heater (see *To Turn OFF Gas to Appliance*, page 11.
9. Replace lower front panel.

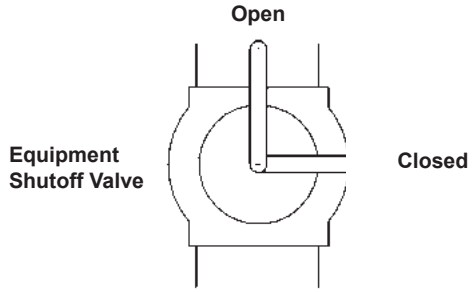

Figure 13

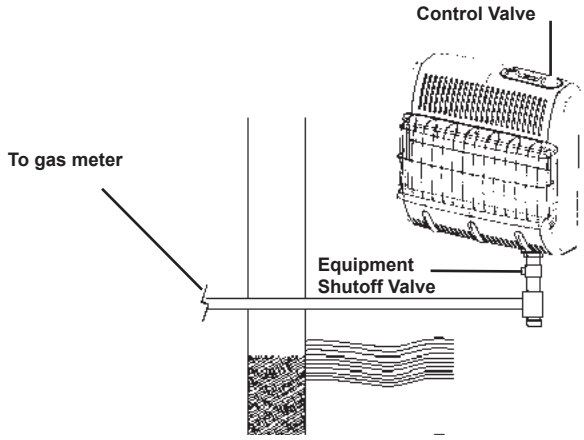

Figure 14

ELECTRICAL WIRING DIAGRAM:

If any original wiring as supplied with the heater must be replaced, it must be replaced with type AWG 105°C wire or its equivalent except as indicated.

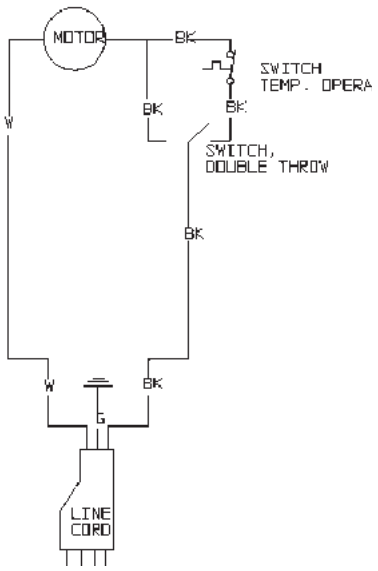

Figure 15

⚠ **WARNING:** Electrical Grounding Instructions: This heater is equipped with a three-prong (grounding) plug for your protection against shock hazard and should be plugged into a properly grounded three-prong receptacle.

OPERATING YOUR HEATER

FOR YOUR SAFETY READ BEFORE LIGHTING

⚠ **WARNING:** If you do not follow these instructions exactly, a fire or explosion may result causing property damage, personal injury or loss of life.

A. This appliance has a pilot which must be lighted by pushing the ignitor button. When lighting the pilot, follow these instructions exactly.

B. BEFORE LIGHTING smell all around the appliance area for gas. Be sure to smell next to the floor because some gas is heavier than air and will settle on the floor.

WHAT TO DO IF YOU SMELL GAS

- Do not try to light any appliance.
- Do not touch any electrical switch; do not use any phone in your building.
- Immediately call your gas supplier from a neighbor's phone. Follow the gas supplier's instructions.
- If you can not reach your gas supplier, call the fire department.

C. Use only your hand to push in or turn the gas control knob. Never use tools. If knob will not push in or turn by hand, don't try to repair it call a qualified service technician or gas supplier. Force or attempted repair may result in a fire or explosion.

D. Do not use this appliance if any part has been underwater. Immediately call a qualified service

technician to inspect the appliance and to replace any part of the control system which has been underwater.

LIGHTING INSTRUCTIONS

1. STOP! Read the all safety information included with and on the side of heater.
2. Make sure the equipment shutoff valve is fully open.
3. Push in gas control knob and slightly turn clockwise to the OFF position (see figure 19).
4. Wait five (5) minutes. Then smell for gas including near the floor. If you smell gas, STOP! Follow “B” in the safety information above. If you do not smell gas, go to the next step.
5. Push in and turn control knob counterclockwise to PILOT. Press in control knob for five (5) seconds.

Note: The first time that the heater is operated after connecting the gas supply, the control knob should be depressed for about 30 seconds. This will allow air to bleed from the gas system. This may take longer in some installations

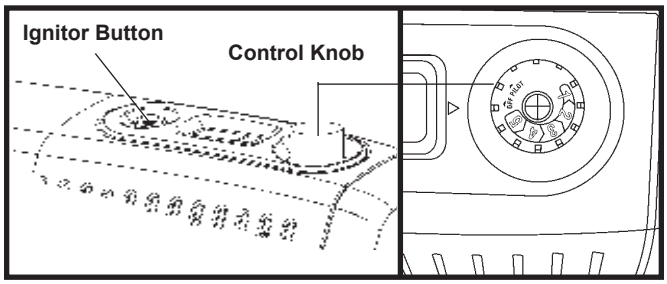

Figure 19.

6. With control knob pressed in, push down and release the ignition button. This will light pilot. If needed keep pressing igniter button until pilot lights.
7. Keep control knob pressed in for (30) seconds after lighting pilot. After 30 seconds, release control knob.

- If pilot does not stay lit, refer to Troubleshooting, pages 14 & 15. Also, contact a qualified service person of gas supplier for repairs.
- If control knob does not pop up when released, contact a qualified service person or gas supplier for repairs.

8. When the pilot is lit, turn control knob counterclockwise to heating level. The main burner should light.
9. To select the desired heat level, turn the temperature setting knob counterclockwise to between 1 & 5.

THERMOSTAT CONTROL OPERATION

FOR IR20NGT / IR30NGT: The thermostatic control used simply turns on and off the burner.

FOR BF20NGT / BF30NGT: The thermostatic control used modulates the flame size as the temperature gets closer to set point, then it turns off the burner upon reaching temperature.

The burner will cycle back on when room temperature drops below the set temperature. The control knob can be set to any heat level between 1 and 5. Selecting the HI setting will cause the burner to remain on.

TO TURN OFF GAS TO APPLIANCE

SHUTTING OFF HEATER

1. Turn control knob clockwise to the OFF position.
2. Turn off all electrical power to the appliance if servicing is to be preformed.
3. Turn off equipment shutoff valve.

SHUTTING OFF BURNER ONLY (PILOT STAYS LIT)

1. Turn control knob clockwise to the PILOT/IGN position.

INSPECTING BURNER

Check pilot flame pattern and burner flame pattern often.

PILOT FLAME PATTERN

Figure 21 shows a correct pilot flame pattern. Figure 22 shows an incorrect pilot flame pattern. The incorrect pilot flame pattern is not touching thermocouple. This will cause the thermocouple to cool. When the thermocouple cools, the heater will shut down. If pilot flame pattern is incorrect, as shown in Figure 22:

- Turn heater off (see *To Turn OFF Gas to Appliance*, above.
- See Troubleshooting, pages 14-15.

CLEANING AND MAINTENANCE

⚠ **WARNING:** Turn off heater and let cool before servicing.

CAUTION: You must keep control areas, burner and circulation air passageways of heater clean. Inspect these areas of heater before use. Have the heater inspected yearly by a qualified service person. Heater may need more frequent cleaning due to excess lent from carpeting, bedding material, pet hair, etc.

Make sure grille guard is in place before running heater. If screen or grille guard is removed for servicing it must be replaced prior to operating the heater.

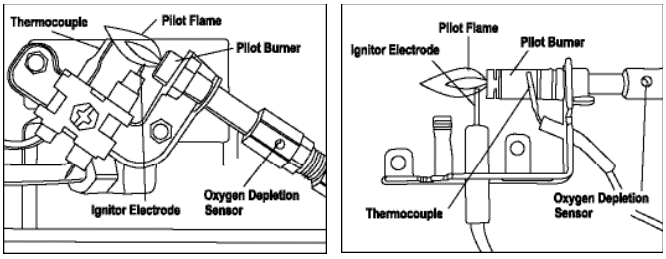

Note: Your heater may have either pilot assembly.

Figure 17

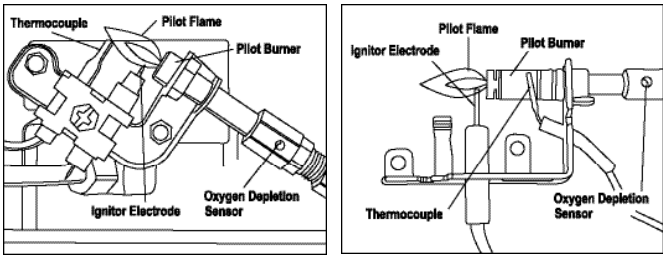

Correct pilot position. ***Figure 21***

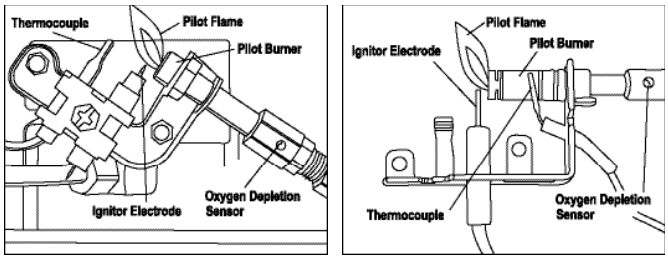

Incorrect pilot position. ***Figure 22***

⚠ **WARNING:** Failure to keep the primary air opening(s) of the burner(s) clean may result in sooting and property damage.

CLEANING ODS/PILOT AND BURNER

- Use as vacuum cleaner, pressurized air or small soft bristled brush to clean.

CLEANING BURNER PILOT AIR HOLE INLET

We recommend that you clean the unit ever 2,500 hours of operation or every three months. We also recommend that you keep the burner tube and pilot assembly clean and free of dust and dirt. To clean these parts we recommend using compressed air no greater than 30 psig.

This can be done by using a vacuum cleaner in the blow position, using compressed air in a can, please follow the directions on the can. If you don't follow directions on the can you could damage the burner or pilot assembly. In addition, the directions that follow should also be followed.

1. Shut off the unit, including the pilot. Allow the unit to cool for at least thirty minutes.
2. Inspect burner and pilot for dust and dirt.
3. Blow air through the port/slots and holes in the burner.

A yellow tip on the pilot flame indicates dust and dirt in the pilot assembly. To clean the pilot assembly find the small pilot air inlet hole about two inches from where the pilot flame comes out of the pilot assembly (see figure 25). With the unit off, lightly blow air through the air inlet hole. You may blow through a drinking straw if compressed air is not available.

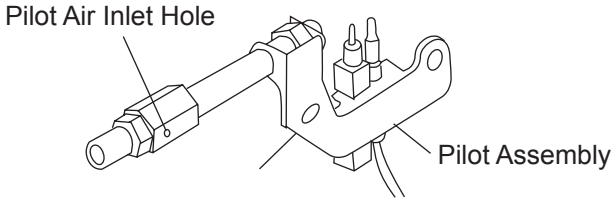

Figure 25

CLEANING HEATER CABINET

Air passageways

- Use a vacuum cleaner or pressurized air to clean

Exterior

- Use a soft cloth dampened with a mild soap and water mixture. Wipe the cabinet to remove dust.

This page intentionally left blank.

TROUBLESHOOTING

NOTE: All troubleshooting items are listed in order of operation and likely occurrence.

⚠ **WARNING:** Only a qualified service person should service and repair heater.

CAUTION: Never use a wire needle, or similar object to clean ODS/pilot. This can damage ODS/pilot unit.
Make sure grille guard is in place before running heater. If screen or grille guard is removed for servicing it must be replaced prior to operating the heater.

⚠ **WARNING:** If you smell gas:

- Shut off gas supply
- Do not try to light any appliance
- Do not touch any electrical switch; do not use any phone in your building
- Immediately call you gas supplier from a neighbor's phone. Follow the gas supplier's instructions.
- If you cannot reach your gas supplier, call the fire department.

IMPORTANT: Operating heater where impurities in air exist may create odors. Cleaning supplies, paint, paint remover, cigarette smoke, cements and glues, new carpet or textiles, etc., create fumes. These fumes may mix with combustion air and create odors and possible discoloration of walls and ceilings.

OBSERVED SYMPTOM	POSSIBLE CAUSE	REMEDY
When ignitor button is pressed in, there is no spark at pilot	1. Ignitor electrode positioned wrong. 2. Ignitor electrode is broken. 3. Ignitor electrode not connected to ignitor. 4. Ignitor cable pinched or wet. 5. Broken ignitor cable. 6. Bad Piezo ignitor. 7. Low Battery.	1. Reposition electrode 2. Replace electrode 3. Reconnect ignitor cable 4. Free ignitor cable if pinched by any metal or tubing. Keep ignitor cable dry. 5. Replace ignitor cable 6. Replace control valve 7. Replace battery
ODS/pilot lights but flame goes out when control knob is released	1. Gas supply turned off or equipment shutoff valve closed. 2. Control knob not fully pressed in while pressing ignition button. 3. Air in gas line when installed. 4. ODS/pilot is clogged. 5. Gas regulator setting is not correct 6. Control knob not in pilot position 7. Thermocouple connection loose at control valve 8. Pilot flame not touching thermocouple, which allows thermocouple to cool, causing pilot flame to go out. This problem could be caused by one or both of the following: a. Low gas pressure b. Dirty or partially clogged ODS/pilot	1. Turn on gas supply turn off or open equipment shutoff valve closed 2. Fully press in control knob while pressing ignition button 3. Continue holding down control knob. Repeat ignition operation until air is removed. 4. Clean ODS/pilot (see Cleaning and Maintenance pages 11 and 12). 5. Replace gas regulator 6. Turn Control knob to pilot position
When ignitor button is pressed in, there is a spark at the ODS/pilot but no ignition	1. Control knob not fully pressed in. 2. Control knob not pressed in long enough 3. Equipment shutoff valve not fully open 4. Thermocouple damaged 5. Control valve damaged	1. Press in control knob fully 2. After ODS/pilot lights, keep control knob pressed in for 30 seconds 3. Fully open equipment shutoff valve 4. Hand tighten thermocouple nut until snug, and then tighten 1/4 turn more. 5. - a. Contact local gas company b. Clean ODS/pilot (see Cleaning and Maintenance, pages 11 and 12). 6. Replace thermocouple 7. Replace Control valve.

Burner does not light after ODS/pilot is lit	1. Burner orifice is clogged 2. Burner orifice diameter to small 3. Inlet gas pressure is too low	1. Clean burner orifice (see Cleaning and Maintenance on pages 11 and 12), or replace burner orifice 2. Replace burner orifice 3. Contact local gas company
Delayed ignition of burner	1. Manifold pressure is too low 2. Burner orifice is clogged	1. Contact local gas company 2. Clean burner orifice (see Cleaning and Maintenance on pages 11 and 12), or replace burner orifice
Burner backfiring during operation	1. Burner orifice is clogged or damaged 2. Burner damaged 3. Gas regulator defective	1. Clean burner orifice (see Cleaning and Maintenance on pages 11 and 12), or replace burner orifice 2. Replace burner 3. Replace gas regulator
Burner plaque(s) does not glow [Infrared Only]	1. Plaque damaged 2. Control knob set between locked positions. 3. Inlet gas pressure is too low	1. Replace burner 2. Turn control knob until it locks at desired setting. 3. Replace gas regulator
Slight smoke or odor during initial operation	1. Residues from manufacturing process	1. Problem will stop after a few hours of operation
Heater produces a whistling noise when burner is lit	1. Turning control knob to HI position when burner is cold 2. Air in gas line 3. Air passageways on heater blocked 4. Dirty or partially clogged burner orifice.	1. Turn control knob to LO position and let warm up for a minute. 2. Operate burner until air is removed from line have gas line checked by local gas company. 3. Observe minimum installation clearances (see Figure 4 page 7) 4. Clean burner orifice (see Cleaning and Maintenance on pages 11 and 12), or replace burner orifice.
White powder residue forming within burner box or on adjacent walls or furniture	1. When heated, vapors from furniture polish, wax, carpet cleaners, etc., turn into white powder residue	1. Turn heater off when using furniture polish, wax, carpet cleaner or similar products.
Heater produces unwanted odors.	1. Heater burning vapors from paint, hair spray, glues, etc. See IMPORTANT statement at top of page 14. 2. Gas leak. See WARNING statement at top of page 14.	1. Ventilate room. Stop using odor-causing products while heater is running. 2. Locate and correct all leaks (see Checking Gas Connections, page 10)
Heater shuts off in use (ODS operates)	1. Not enough fresh air is available 2. Low line pressure 3. ODS/pilot is partially clogged	1. Open window and/or door for ventilation 2. Contact local gas company 3. Clean ODS/pilot (see Cleaning and Maintenance, pages 11 and 12)
Gas odor even when control knob is in OFF position	1. Gas leak. See WARNING statement at top of page 14. 2. Control valve is defective	1. Locate and correct all leaks (see Checking Gas Connections, page 10) 2. Replace control valve
Gas odor during combustion	1. Foreign matter between control valve and burner 2. Gas leak. See WARNING statement at top of page 14.	1. Take apart gas tubing and remove foreign matter 2. Locate and correct all leaks (see Checking Gas Connections, page 10)
Heater produces a clicking/ticking noise just after burner is lit or shut off	1. Metal expanding while heating or contracting while cooling	1. This is common with most heaters. If noise is excessive, contact qualified service person
Moisture/condensation noticed on windows	1. Not enough combustion/ventilation air	1. Refer to Fresh Air for Combustion and Ventilation page 3 through 5.

BF20TB NG
BF20T NG
BF30TB NG
BF30T NG

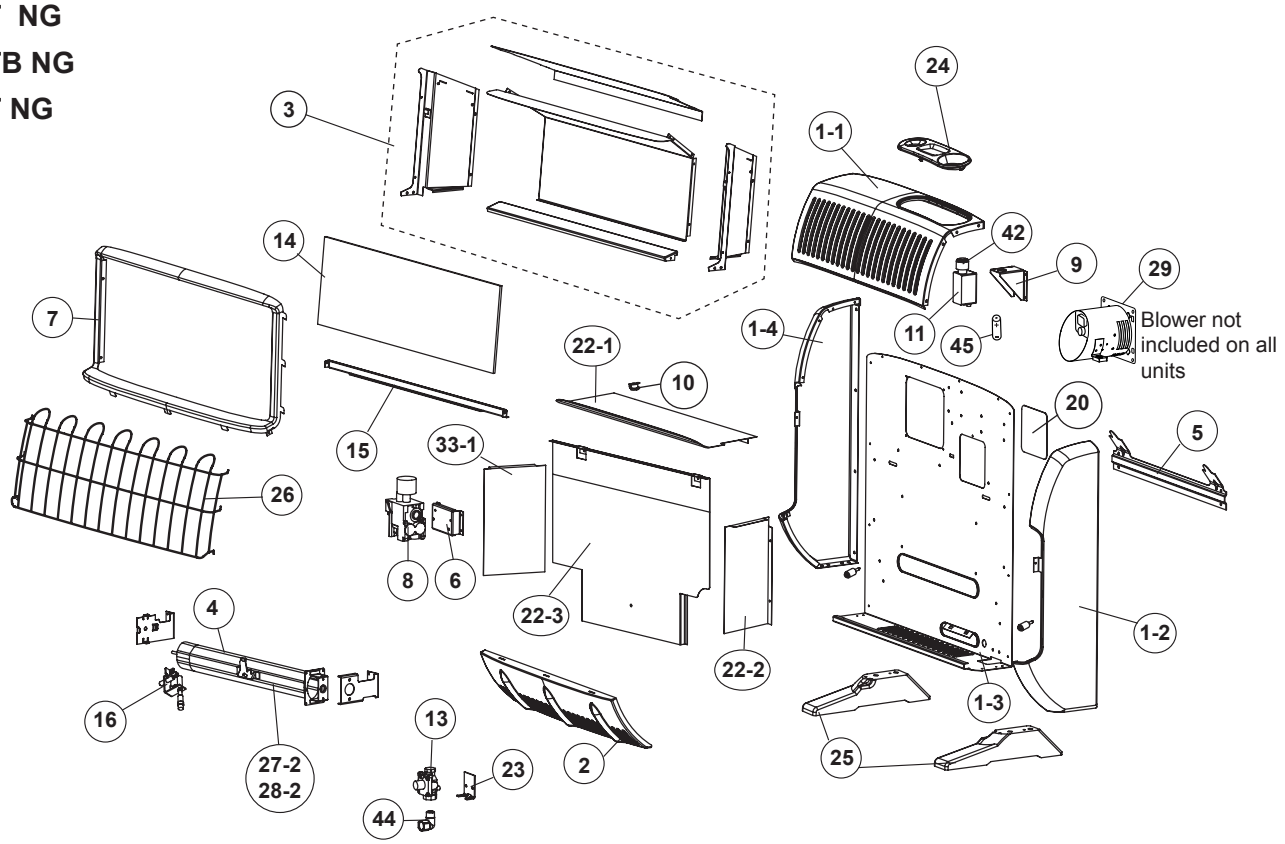

IR20TB NG
IR20T NG
IR30TB NG
IR30T NG

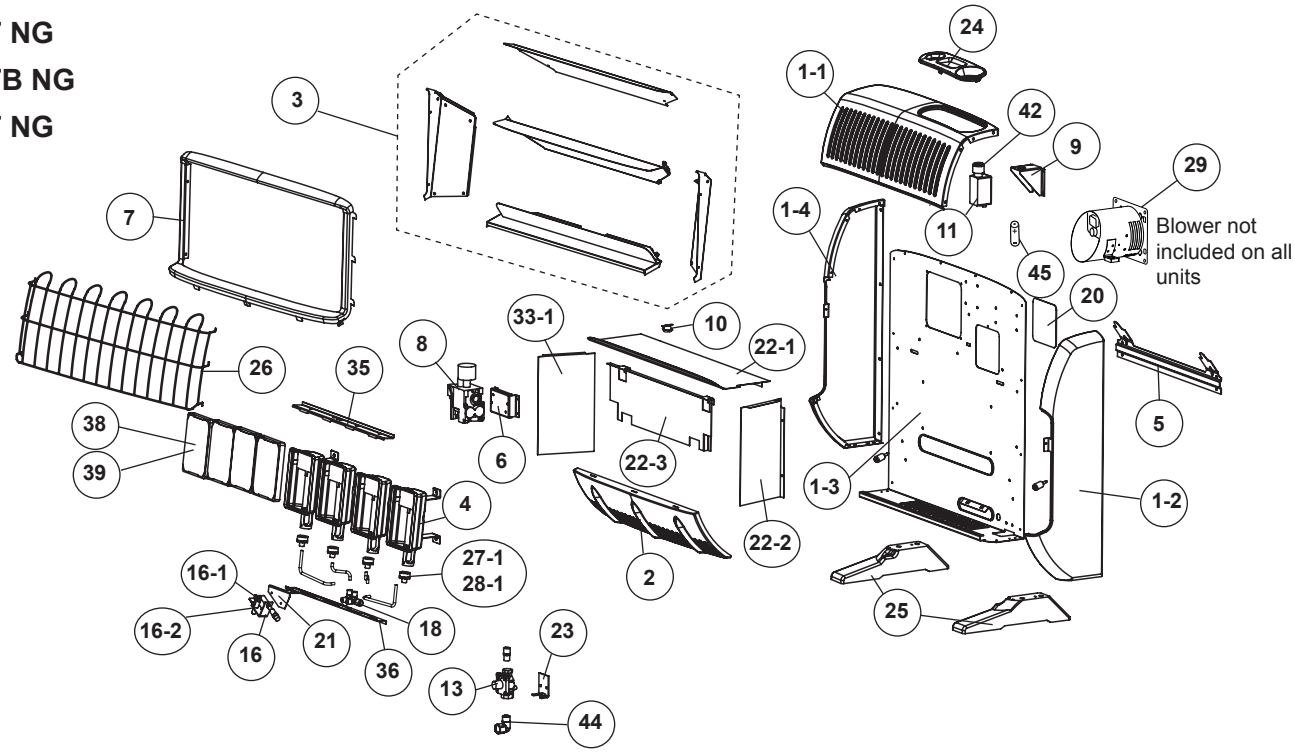

This list contains replacement parts used in your heater. When ordering parts, follow the instructions listed under Replacement Parts on page 20 of this manual.

ITEM	PART NO.				DESCRIPTION	QTY.
	IR20 NG	BF20 NG	IR30 NG	BF30 NG		
1	70600	70600	70605	70605	Cabinet assembly	1
1-1	70601	70601	70606	70606	Cabinet Top Panel	1
1-2	70603	70603	70603	70603	Cabinet Right Panel	1
1-3	70602	70602	70607	70607	Cabinet back Panel	1
1-4	70704	70704	70704	70704	Cabinet Left Panel	1
2	70608	70608	70609	70609	Lower Front panel assembly	1
3	70742	70742	70744	70744	Reflector Assembly	1
4	70830	70633	70831	70635	Burner Assembly	1
5	70636	70636	70636	70636	Wall Mounting Bracket	1
6	70828	70827	70828	70827	Thermostat Valve Mounting bracket	1
7	70821	70821	70822	70822	Bezel – Reflector Front	1
8	70828	70828	70828	70828	Thermostat Valve assembly	1
9	70641	70641	70641	70641	Ignitor Module Mounting Bracket	1
10	70682	70682	70682	70682	High Limit Switch	1
11	70644	70644	70644	70644	Ignitor Module, Battery powered	1
12	–	–	–	–	–	–
13	70338	70338	70356	70338	Pressure regulator	1
14	---	70646	---	70648	Glass	1
15	---	70647	---	70649	Glass Mounting Bracket	1
16	70339	70339	70339	70339	ODS / Pilot Assembly	1
17	–	–	–	–	–	–
18	70650	---	70652	---	Gas Manifold	1
20	70847	70847	70847	70847	Access Cover Plate	1
21	70655	---	70655	---	ODS mounting bracket	1
22-1	70741	70741	70743	70743	Heat Shield – Top	1
22-2	70745	70745	70745	70745	Heat Shield – Right	1
22-3	70751	70753	70752	70754	Heat Shield – Back	1
23	70663	70663	70663	70663	Regulator Mounting Bracket	1
24	70664	70664	70664	70664	Control / ignitor cover	1
25	70665	70665	70665	70665	Floor mount feet	2
26	70829	70829	70880	70880	Grill guard	1
27-1	—	—	70838	---	Orifice, 30, IR	4
27-2	—	—	—	70669	Orifice, 30, BF	1
28-1	70840	–	–	–	Orifice, 20, IR	3
28-2	–	70671	–	–	Orifice, 20, BF	1
29	70740	70740	70740	70740	Blower Assembly *not included on all units	1
30	–	–	–	–	–	–
31	–	–	–	–	–	–
32	–	–	–	–	–	–
33-1	70756	70756	70756	70756	Heat Shield – Left	1
35	70675	–	70676	–	Bracket, Top, Plenum Assembly	1
36	70675	–	70676	–	Bracket, Bottom, Plenum Assembly	1
37	–	–	–	–	–	–
38	--	–	70677	–	Burner Plaques, 30	4

ITEM	PART NO.				DESCRIPTION	QTY.
	IR20 NG	BF20 NG	IR30 NG	BF30 NG		
39	70677	–	--	–	Burner Plaques, 20	3
40	--	–	70678	–	Plaques Gasket, 30	4
41	70678	–	--	–	Plaques Gasket, 20	3
42	70701	70701	70701	70701	Ignition Cap	1
44	70597	70597	70597	70597	3/8” FTP x 3/8” MPT Elbow	
45	70590	70590	70590	70590	AA Battery	
*	70680	70680	70680	70680	Power Cord	1
*	70679	70679	70679	70679	Strain Relief Grommet	1
*	70689	–	70692	–	Right Burner Gas Tube	1
*	70690	–	70693	–	Right Middle Gas Burner Tube	1
*	–	–	70598	–	Left Middle Gas Burner Tube	1
*	70691	–	70694	–	Left Burner Gas Tube	1
*	70695	70695	70696	70696	ODS Gas Tube Assembly	1
*	70697	70697	70697	70697	Regulator to Thermostat Valve Tube Ass’y	1
*	70698	–	70698	–	Thermostat Valve to Manifold Tube	1
*	70341	70341	70341	70341	Ignitor Wire	1
*	70699	–	70699	–	Gas Manifold Nut	1
*	70342	70342	70342	70342	Hardware Kit	1
*	70343	70349	70345	70346	CSA Label	1
*	70349	70349	70349	70349	Gas Instruction Decal	1
*	70350	70350	70350	70350	Inside Warning Label	1
*	70351	70351	70351	70351	Thermostat Sensing Bulb Clip	2

** Not sold separately – Must purchase Assembly
* Items not shown

This page intentionally left blank.

OPERATING INSTRUCTIONS AND OWNER'S MANUAL

READ INSTRUCTIONS CAREFULLY: Read and follow all instructions. Place instructions in a safe place for future reference. Do not allow anyone who has not read these instructions to assemble, light, adjust or operate the heater.

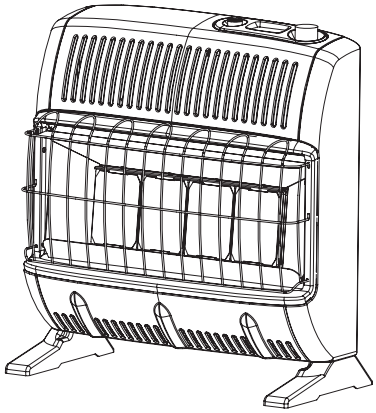

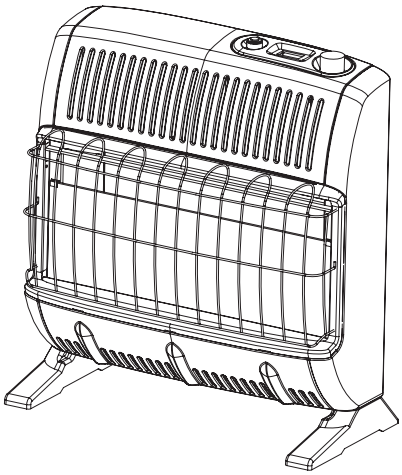

WARNING:

USE ONLY MANUFACTURER'S REPLACEMENT PARTS. USE OF ANY OTHER PARTS COULD CAUSE INJURY OR DEATH. REPLACEMENT PARTS ARE ONLY AVAILABLE DIRECT FROM THE FACTORY AND MUST BE INSTALLED BY A QUALIFIED SERVICE AGENCY.

REPLACEMENT PARTS ORDERING INFORMATION:

PURCHASING: Accessories may be purchased at any Mr. Heater local dealer or direct from the factory

FOR INFORMATION REGARDING SERVICE

Please call Toll-Free 800-251-0001
www.mrheater.com

Our office hours are 8:30 AM – 5:00 PM, EST, Monday through Friday.

Please include the model number, date of purchase, and description of problem in all communication.

LIMITED WARRANTY

Mr. Heater, Inc. warrants its heaters and accessories to be free from defects in material and workmanship for a period of 1 year from date of purchase. Mr. Heater, Inc. will repair or replace this product free of charge if it has been proven to be defective within the 1-year period, and is returned at customer expense with proof of purchase to Mr. Heater, Inc. within the warranty period.

Mr. Heater, Inc. reserves the right to make changes at any time, without notice or obligation, in colors, specifications, accessories, materials and models.

PRODUCT REGISTRATION: Thank you for your purchase.
Please log in to http://www.egiregistration.com to register your product.

Mr. Heater, Inc., 4560 W. 160TH ST., CLEVELAND, OHIO 44135 • 800-251-0001
Mr. Heater is a registered trademarks of Mr. Heater, Inc.
© 2015, Mr. Heater. All rights reserved

DESIGN CERTIFIED®

ANSI Z21.11.2b - 2010