CANEST®

Model:TC-100GE

INSTALLATION GUIDE
IMPORTANT SAFEGUARDS

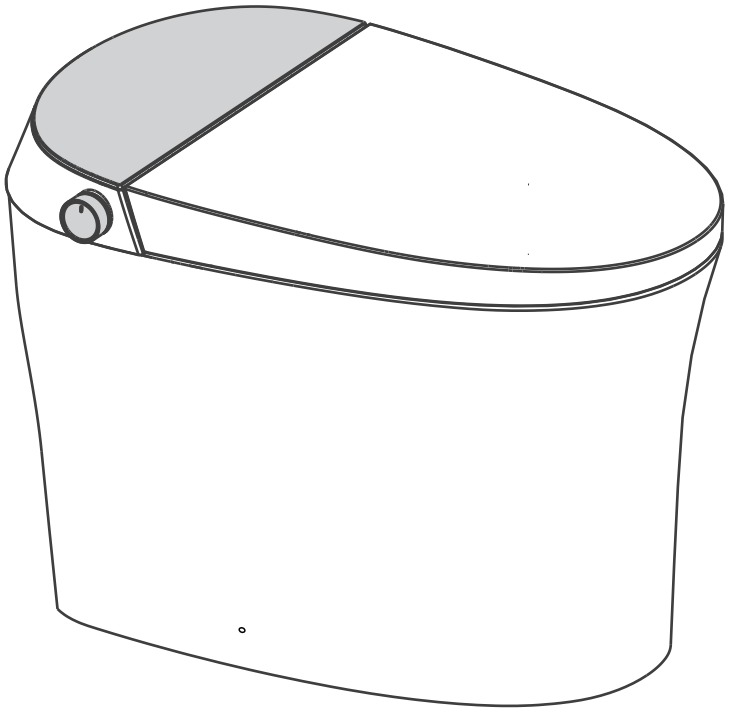

READ ALL INSTRUCTIONS BEFORE USING.

Get free technical support for the lifetime of your product.

Email: service@canesthome.com

Phone: (+1) 702-824-3195

Table of Contents

Safety Precautions 1
Technical Specifications 4
Pre−installation 5
Installation 7
Remote Control Installation and Battery Replacement 10
Side Rotated Knob Operation 11
Remote Control Instructions 12
Automatic Function 16
Daily Maintenance 17
Label Illustration 19
Troubleshooting 20
Fault Code 21

Safety Precautions

Before installation, please read this manual carefully and install it in strict accordance with the instructions. After reading, please put this manual in a prominent position. Keep the place properly. In order to avoid injury and property damage to users and others, please strictly observe the safety warnings and precautions.

SIGN	MEANING
Warning	It means that if the regulations in this warning are not observed and misoperation is made, serious injury or death may be caused.
Danger	It means that if the regulations in this warning are not observed and misoperation is made, serious injury or death may be caused.

The following signs are used to indicate important safety precautions when using the product.

SIGN	MEANING
	This figure indicates that it is not feasible and [prohibited].
	This figure shows the content that must be enforced.

WARNING

Do not install and use this product in damp places.This product must be reliably grounded, and the reliable connection of AC socket ground wire to the ground should be ensured. The grounding wire should use a tripod socket. If you are not sure whether it has been reliably grounded, please ask a qualified electrician or maintenance personnel to check and confirm. Please ensure that the wiring of the power socket conforms to the national standard (zero on the left and fire on the right) and cannot be reversed.

It is forbidden to use the power extension cord or loose and unstable power socket, otherwise it may cause fire or electric shock.

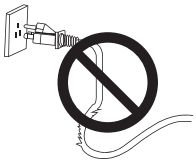

The lit cigarettes and other combustibles cannot be put into the toilet cover, otherwise it may cause fire. It is forbidden to disassemble, repair or modify the product by yourself, otherwise it may cause fire or electric shock.

This product must be connected to a special standard socket and wiring with a120V~/60HZ load current of at least 10A, and the socket must be equipped with Earth fault circuit breaker or earth leakage protector or similar high sensitive and fast leakage switch (rated sensitive current Below 10mA).

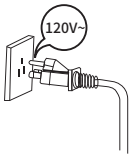

Do not touch the product that has fallen into water or soaked in water, and immediately unplug the power plug.

If the power cord is damaged, in order to avoid danger, it must be replaced by professionals from the manufacturer, its maintenance department or similar departments.

WARNING

Please pull out the power plug when it thunders.

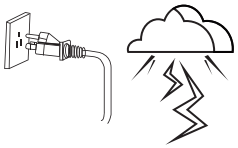

If the product function is abnormal or fails, please stop using it immediately and cut off the power supply, and contact the service provider in time.

When used by people (including children) with physical, cognitive and intellectual disabilities or lack of experience and common sense, it is necessary to use this product under supervision, patients with heart disease should use it carefully.
Do not let children play with this product.

If it is not used for a long time, the power supply and water supply must be cut off.

It is forbidden to disassemble, repair or modify the product by yourself, otherwise it may cause fire or electric shock.

Banana water, gasoline, liquid medicine, detergent, insecticide, toilet cleaner and hard brush are prohibited to clean this product.



Do not pour water or detergent on the machine body or power plug, otherwise it may cause fire or electric shock.

This product is an electrical product. It is forbidden to put it in a place that is easy to be soaked by water. Do not pour urine or other liquids onto the body.



Do not use water other than tap water, otherwise it may cause skin inflammation and other problems.

Do not stand on the ceramic toilet, and do not hit the ceramic with gravity to prevent damage and water leakage.



Do not put fingers or other objects into or block the drying air outlet, otherwise it may cause scald, electric shock or burn.

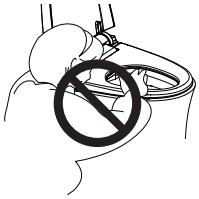

It is forbidden to use other electrical appliances on the same socket.

When the product is powered on, it is not allowed to put the product sideways or upside down, otherwise it may cause fire or burn.

The socket shall be installed in a place that is not easy to be soaked by water. It is recommended to use waterproof socket.

The new hose assembly and other attached or designated parts attached with the appliance shall be used for installation. The old hose assembly cannot be reused, Otherwise, it may cause water leakage, fire or electric shock.

When the product is moved indoors from a cold or wet place, it should be stored for 2 hours to fully volatilize the condensed water in the machine, and then it can be started for use, To avoid short circuit of products.

WARNING

Do not place the product where it may fall or be pulled into the bathtub or sink.

Do not put this product in water or other liquids.

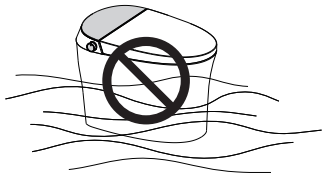

Do not touch the product that has fallen into water or soaked in water, and immediately unplug the power plug.

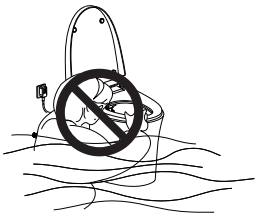

It is forbidden to embed cementitious materials (cement mortar) into the base of the ceramic toilet, otherwise the ceramic toilet may be cracked due to expansion.

Do not exert strong force or impact, do not stand on the seat ring, toilet cover or this product, and do not place heavy objects.

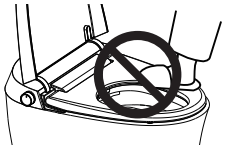

Do not let the sun shine directly on the product to avoid discoloration and affect the reception effect of the remote control.

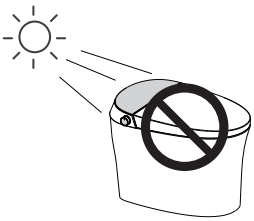

Do not connect the water pipe with the outlet pipe of the water heater. The water inlet temperature is 41°F~104°F. If it exceeds the specified range, it may cause internal heating.The component does not work properly.

When using this product, do not lean back on the toilet cover to avoid damaging the product.

Please do not flush newsprint, paper urinal pads, women's sanitary napkins and other easily clogged items into the toilet.



Do not use the product in an environment below 32°F. If the room temperature is lower than 32°F, the water in the water supply line of the product must be drained, Prevent the water way from freezing and cracking, causing water leakage or fire during later use.

To prevent damage caused by freezing, please take measures to keep warm and increase the temperature of the toilet.

When installing, disassembling, repairing and maintaining the product, you must unplug the power plug and close the water supply valve.

The seat ring and toilet lid of this product would lower slowly. Do not press hard to avoid damaging it .

Technical Specifications

Rated voltage		120V~
Rated frequency		60Hz
Rated power		1240W
Pressure of Water supply		13.05psi(minimum necessary water pressure) - 116.03psi (static pressure)Flow of water supply at least 4.5gpm
Ambient temperature		32°F- 104°F
Temperature of water supply		41°F- 104°F
Toilet Flushing	Flushing type	Jet Siphon
	Rough in	12"
Cleansing	Water heating type	Instant heating
	Water heating power	1300W
	Warm water temperature	off, 86°F- 100.4°F (6 levels)
	Safety device	Temperature fuse, water temperature sensor, grounding protection, over-temp protection
Dryer	Min air volume	≥ 0.2m³/ min
	Air heating power	250W
	Dryer temperature	off, 86°F- 122°F (6 levels)
	Safety device	Temperature controller, temperature fuse, leakage protection plug.
Heating seat	Seat heating power	40W
	Seat temperature	off, 86°F- 100.4°F (6 levels)
	Safety device	Temperature sensor, temperature fuse, temperature controller, grounding protection,
Product size		26.5 x 16.8 x 18.7 inch
Water proof rate		IPX4

Remarks:
Rated power: the product starts to power on and start up under the conditions of ambient temperature of 73.4℉, static water inlet pressure of 116.03psi+/-2.9psi, and water inlet temperature of 41℉. After setting the water pressure, seat temperature and water temperature to the highest level in turn, immediately start the rear wash and continue to work steadily for the average power of a cleaning cycle.

Pre-installation

Parts diagram

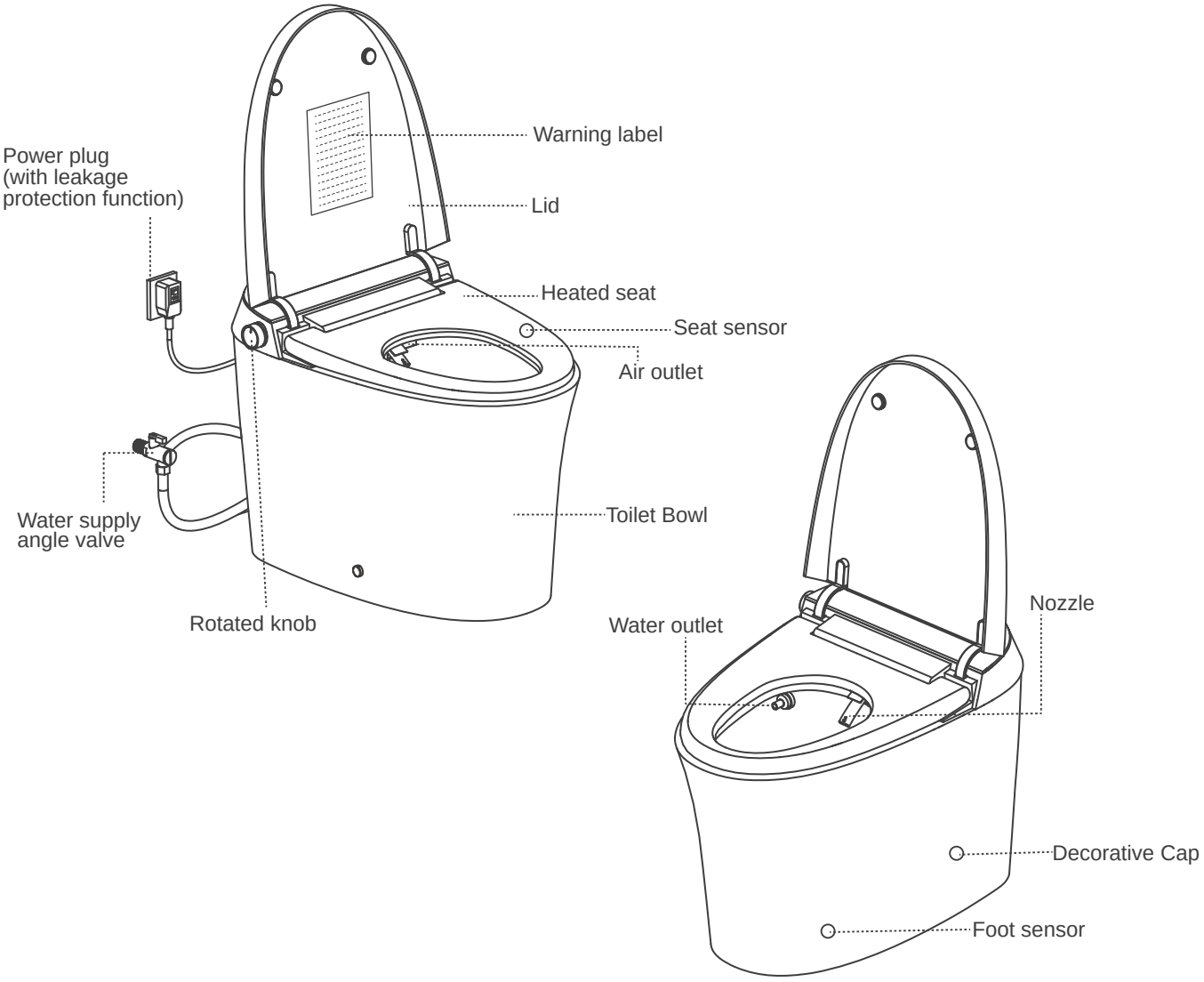

Tools required

Please prepare the following required tools before installation.

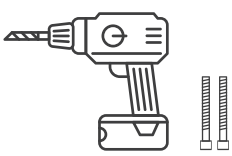

Electric Drill
(Diameter：0.24in)

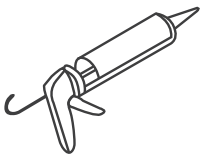

Caulk Gun



Teflon Tape



Knife

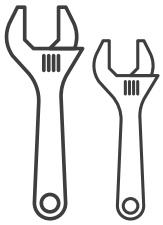

Spanner
(0.91-0.98in)



Assorted
Screwdrivers



Steel Tape



Measuring Glass

Pre-installation

Hardware Included

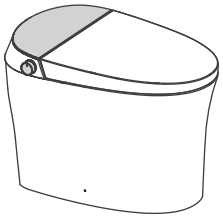

Main unit

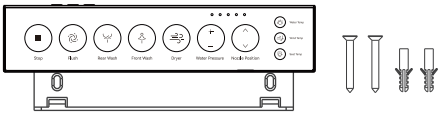

Remote control & Holder
& Expansion screw set

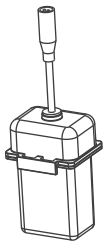

Spare battery box

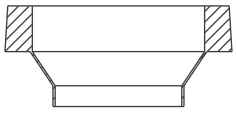

Wax ring

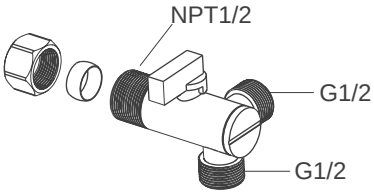

Angle valve

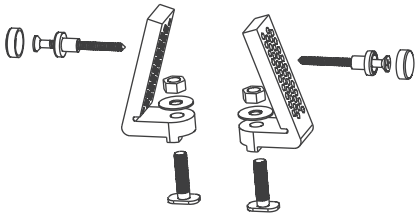

Installation accessories



Installation instructions &
warranty card

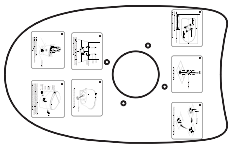

Installation cardboard

Part	Quantity	Part	Quantity
Main unit	1	Spare battery box	1
Remote control	1		
Wax ring	1		
Angle valve	1		
Installation accessories	1 Set		
User manual	1		
Installation cardboard	1		

Picture for reference only

Installation

Technical drawing

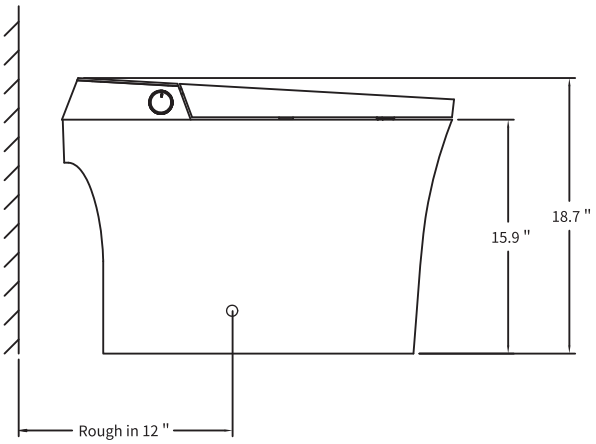

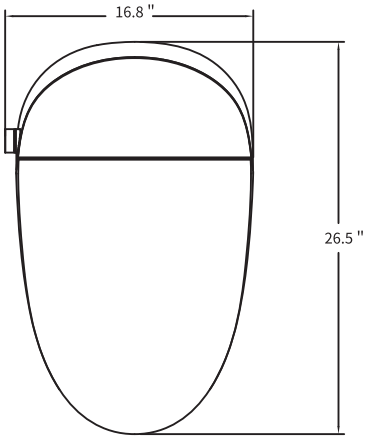

1. Install the offered angle valve

Mark the center line of the drain outlet on the ground, and install the water inlet angle valve at a suitable position on the wall according to the size of the toilet.
After installing the angle valve, open the valve to discharge the sewage.

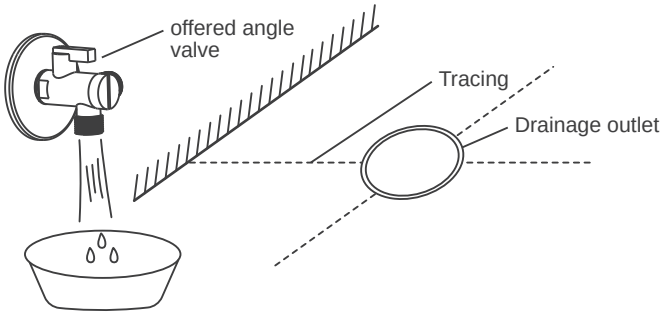

2. Mark the drain with a cross line

Cardboard installation

·Align the cardboard with the center line of the drain
·Draw contour lines from cardboard.

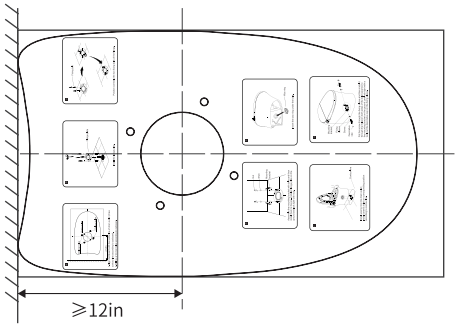

3. Install the flange plate

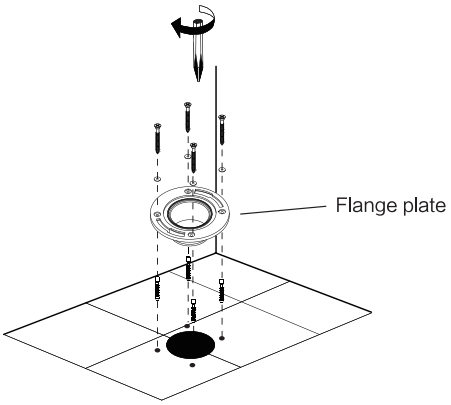

4. Position correctly the two fixing bolts of the flange

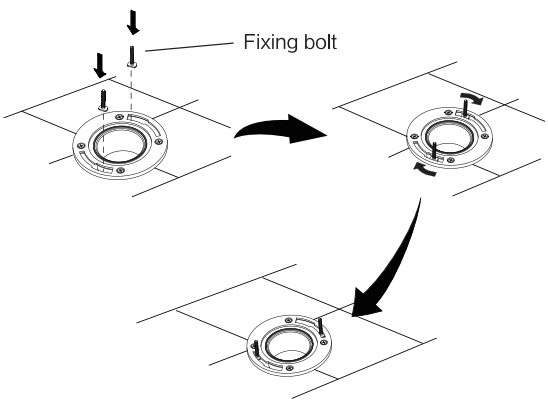

Installation

5. Assemble the mounting bracket with bolts and then install them to the pre -installed flange plate on the ground and lock tight with nuts.

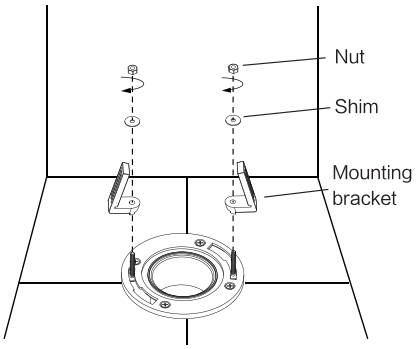

6. Insert the wax ring under the toilet.

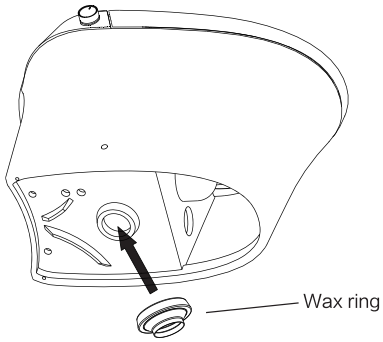

7. Install waxing ring into drain outlet; Install ceramic toilet on corresponding position according to contour line.

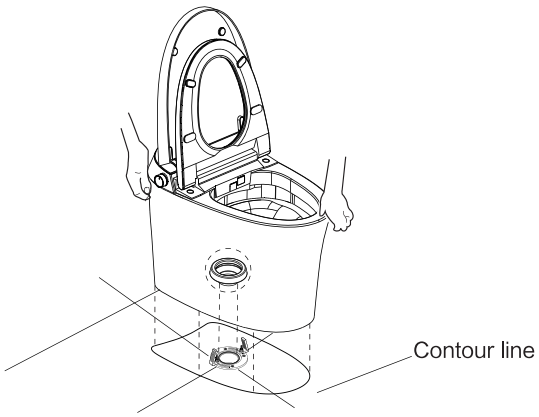

8. Put the screw through the fixing sleeve and then install it through the holes(on both sides of the toilet ceramic) to the mounting bracket on the ground ,and lock tight with a tool, put the decorative cap on the fixing sleeve.

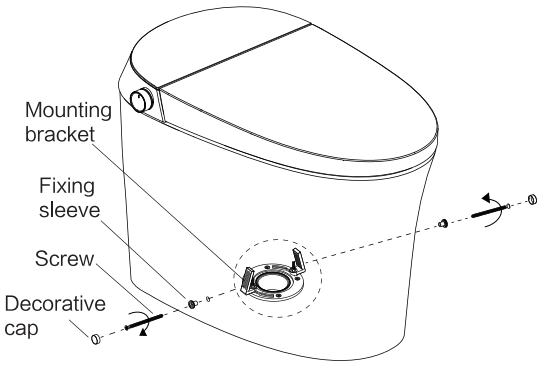

9. Connect hose and angle valve

As shown in the figure below, connect and tighten the inlet hose, angle valve .

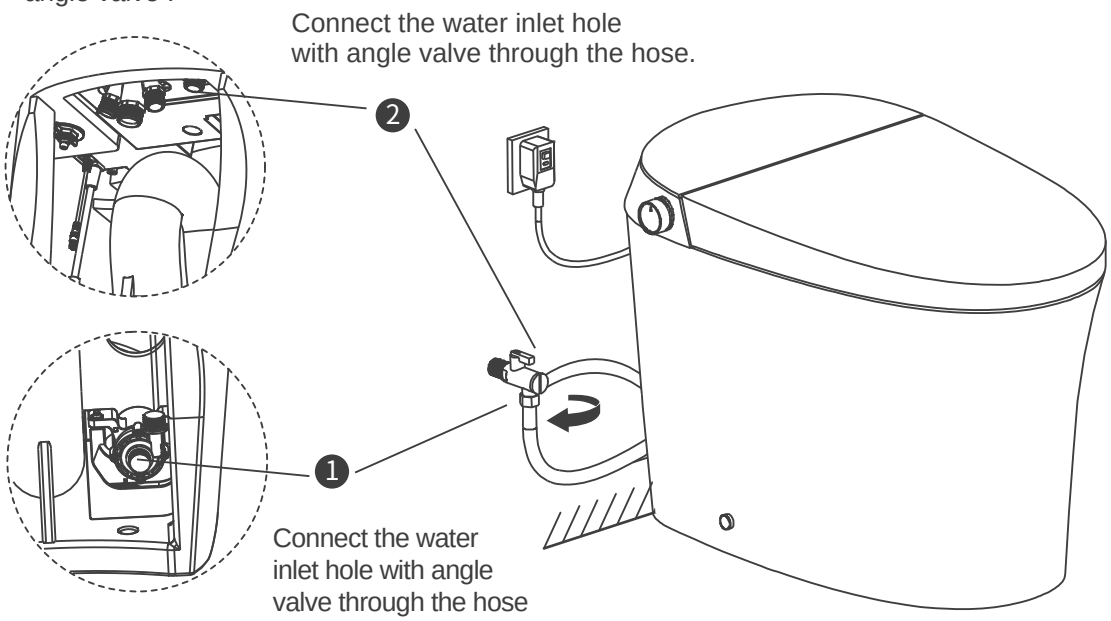

10. Install the battery box

1. Put battery (9V, not included) in the battery box. 2. Connect the cable

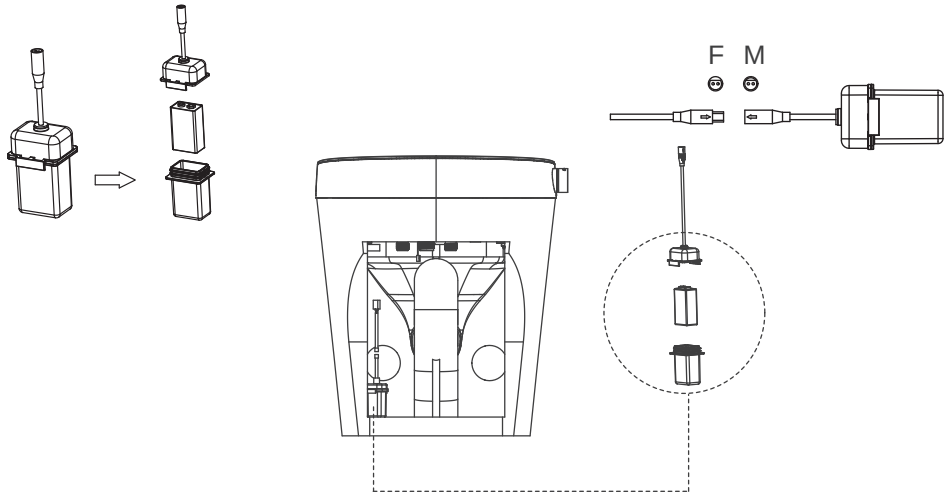

Battery replacement

1. Remove the battery box from the back of the toilet and pull out the battery box connector.
2. Open the battery box, remove the old battery and replace it with a new one.
3. Plug in the battery box connector and the toilet cable and put them back on the back of the toilet.
4. It is recommended to use high quality 9V dry battery.
5. It is recommended to replace the battery every two years, otherwise there may be a risk of leakage.

11. Open the angle valve

Check the tightness of the threaded connection to make sure there is no water leakage.
Turn the angle valve counterclockwise and adjust the opening to the maximum.

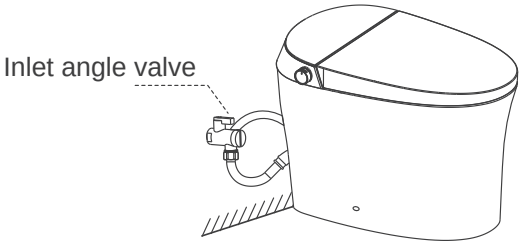

REMINDER

When opening the angle valve for the first time, it may be a bit tight.

12. Power on

Plug the leakage protection plug into the power socket, press the reset switch, and the plug indicator light will be on, indicating that it is powered on.

REMINDER

*Press the leakage test key before use, the reset switch pops up, indicating leakage protection.
The protection function is normal.
*Press the TEST button (then RESET button) every month to assure proper operation.

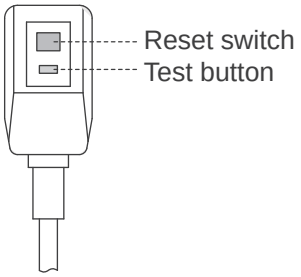

*It is applicable to the model with leakage protection plug.
The leakage protection plug is subject to the actual object.

13. Safety self-inspection

1. The buzzer of the main engine beeps, the blue light of the knob flashes, and the self-test starts;
2. The buzzer of the main engine rings another "tick", and the knob turns on white light after self-inspection;
3. The function mode is on and can be used normally.

Remote Control Installation and Battery Replacement

Install remote control

1.Install the remote control rack

1. Stick the remote control rack horizontally to the pre-installation area on the wall, and mark the position of two installation holes on the wall with a marker. Use a drill bit with a diameter of 6mm to drill holes at the marked positions on the wall, with a depth of 35mm.

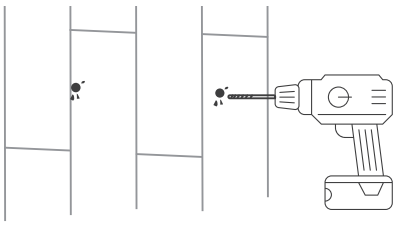

2. Install the expansion pipe into the wall hole, attach the hanger to the wall, align the hole on the hanger with the expansion pipe, and place the screw to lock it.

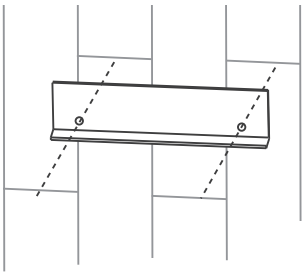

2.Install the remote control hanger (only for the hanger with fixed plate and foam rubber pad)

1. Clean and dry the pre-installed area of the remote control rack on the wall.

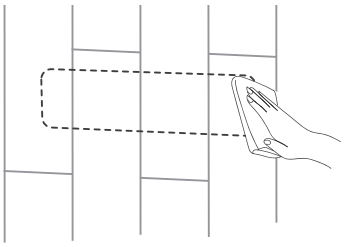

2. Tear off the double-sided adhesive sticker on the back of the hanger and stick it horizontally to the wall.

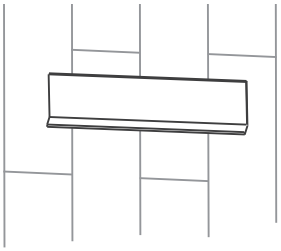

3. Install the battery into the remote control, and place it on the rack.

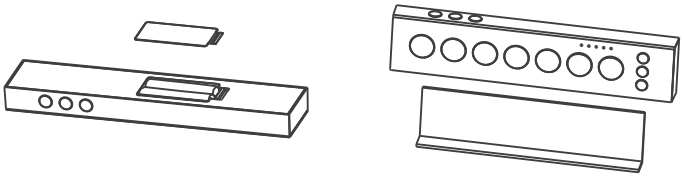

4. Use and replacement of remote control battery

· The remote control uses 2 AAA alkaline batteries.

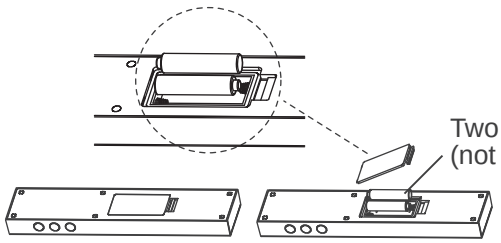

Attention

1. The positive and negative electrodes of the battery must match those on the remote control.
2. New and old batteries cannot be mixed.
3. Please use alkaline battery.

Side Rotated Knob Operation

⏻/■ Power/Stop

1. Long press this button for 5 seconds to enter standby mode (under this mode, indicator light on the knob will flash every 5 seconds and all functions cannot run)
2. Press any button on remote control or press/rotate the knob to exit standby mode, entering the startup mode.
3. when the rear wash, front wash or warm air drying function is running on, short press this button to stop function halfway.
4. Under the non-functional mode, press this button to flush toilet.

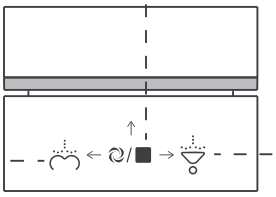

Rear wash

In the power-on state, seated and without washing and drying.

Rotate the knob counterclockwise to start the rear wash function. It will automatically stop when the procedure end. Short press the knob or the Stop button on the remote control to stop the function halfway.

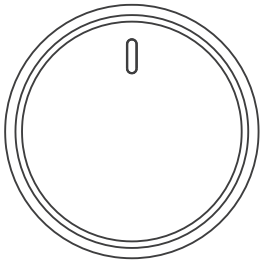

Front wash

In the power-on state, seated and without washing and drying.

Rotate the knob clockwise to start the front wash function. It will automatically stop when the procedure end. Short press the knob or the Stop button on the remote control to stop the function halfway.

Remote Control Instructions (Applicable for Model: TC−100GE)

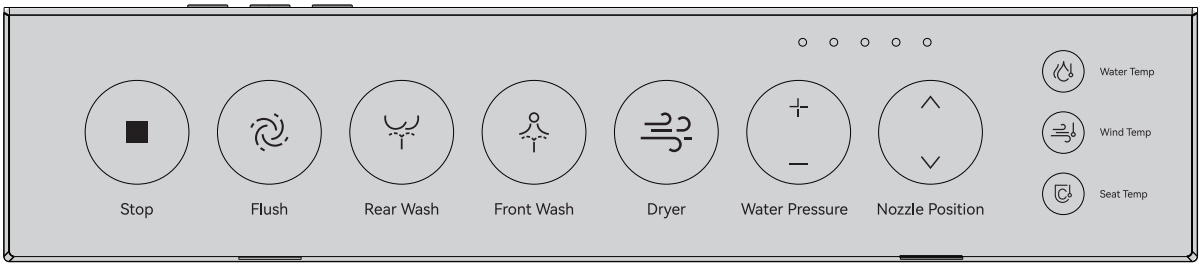

Stop

1. Short press stop button to cease on-going functions halfway.
2. Long press stop button for 5 seconds to enter ECO mode.
3. Long press stop button for 5 seconds to exit ECO mode.

Full flushing

Short press the flush button to perform the full flush funtion.

Rear wash/Oscillating massage

Press this button to start the rear wash function. Press this button again to perform oscillating massage. If you press the Stop key halfway, you can stop it immediately.

Note: Under the oscillating massage procedure, the nozzle will extend and retract repeatedly to achieve the massage effect.

Front wash/Oscillating massage

Press this button to start the front wash function. Press this button again to perform oscillating massage. If you press the Stop key halfway, you can stop it immediately.

Note: Under the oscillating massage procedure, the nozzle will extend and retract repeatedly to achieve the massage effect.

Dryer

Press this button to perform warm air drying. The air temperature can be adjusted.
If it is pressed to "stop"button on the way, the air drying can be stopped immediately.

Water pressure adjustment

When cleaning, press this button to adjust water pressure in 5 different gears.
Press + key once to raise one level, press - key once to decrease one level.
The indicator light will display accordingly.

Nozzle position adjustment

The nozzle position can be adjusted with 5 gears. Press the nozzle adjustment ^ key to extend the nozzle forward, press the nozzle adjustment v key to retract nozzle backwards.

Water temperature adjustment

When cleaning, the water temperature is adjustable with 6 gears. When in off gear, the water flows in ambient temperature and the indicator light is off.

Air temperature adjustment

When drying, the air temperature is adjustable with 6 gears. When in off gear, it blows in ambient temperature and the indicator light is off.

Seat temperature adjustment

The seat temperature is adjustable with 6 gears. Please do not cover the seat sensor in case of sensing failure. The seat temperature will switch to 1st gear after long time sitting in case of low-temperature burns.

Top view of remote control



Pulse massage

When performing rear washing and front washing functions, press the massage button on the remote control to enter the pulse massage mode.

Night light

Press this button to turn on/off night light.

Note: Long press this button for 5 seconds to turn on/off the indicator light on the knob.

Half Flush

Press this button to perform the half flush function.

Control function setting

1. ECO mode

Long press the Stop button on the remote control, after hearing the buzzer make one sound, then it will enter the ECO mode. Long press the stop button on the remote control again, the buzzer make two sounds,then it will exit the ECO mode.

Note:

1. Under the ECO mode, seat temperature are lowered to 1st gear.
   The temperature cannot be adjusted. Other functions are normal.
2. Under the ECO mode, once human is seated, it will exit ECO mode.
   when human is off-seat the ECO mode will resume.

2. Nozzle manual cleaning function

• Press the "Stop" button and "Rear wash" button on the remote control for 3 seconds at the same time to enter the manual cleaning procedure.
Manual cleaning procedure: the nozzle will extend to the longest position and self-clean water flows out continuously.
When there are 10 seconds left for manual cleaning,the nozzle retracts automatically.

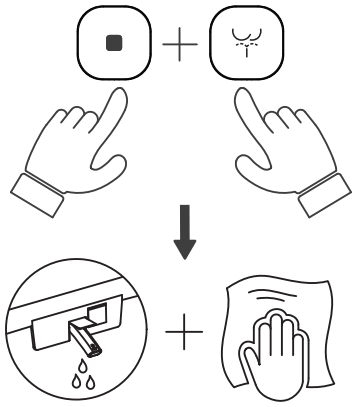

Press and hold the "Stop" and "Rear Wash" buttons on the remote control 3 seconds.

Enter the manual cleaning mode to clean the nozzles.

• During the manual cleaning process, press the "Stop" button on the remote control or knob to exit the manual cleaning mode and the nozzle will retract;

• After the manual cleaning is completed or stopped halfway, the nozzle retracts automatically.

3. Nozzle automatic cleaning function

• Press the "Stop" button and "Front Wash" button on the remote control for 3 seconds at the same time to enter the nozzle automatic cleaning mode.

• Automatic cleaning procedure: the nozzle will extend and retract automatically during cleaning process. Totally 10 cleaning cycle. Press the stop button to cease the function halfway.

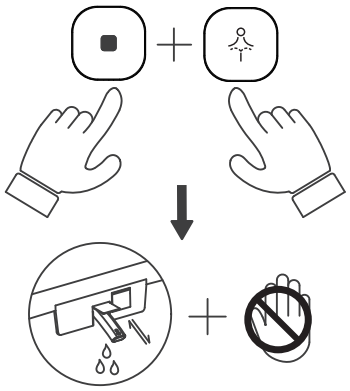

Press and hold the "Stop" and "Front Wash" buttons on the remote control 3 seconds.

Enter the automatic cleaning mode, prohibit manual cleaning, be careful not to pinch your hands.

• During the automatic cleaning process, once human seated, it will exit the automatic cleaning mode. The nozzle will stop flowing water and retract.

4. Mute function

- Press the "Stop" and "Drying" keys on the remote control for 3 seconds at the same time to enter the mute mode.
  Press the "Stop" and "Drying" keys on the remote control for 3 seconds again to exit the mute mode.
- The buzzer function is off in mute mode.

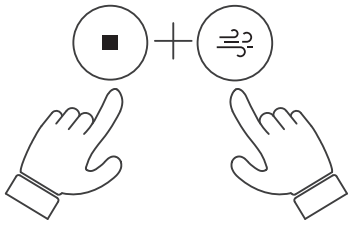

5. Remote control match code

Before the machine is powered on, press and hold the front wash button on the remote control. The five lights on the remote control will flash and enter the pairing mode.
At this time, powering on the machine and press the reset button on the power plug.
Waiting until the indicator light of knob flash between red and green alternately, then press the knob. When you hearing a beep sound. The pairing is successful. Press the stop button on the remote control to exit match code.

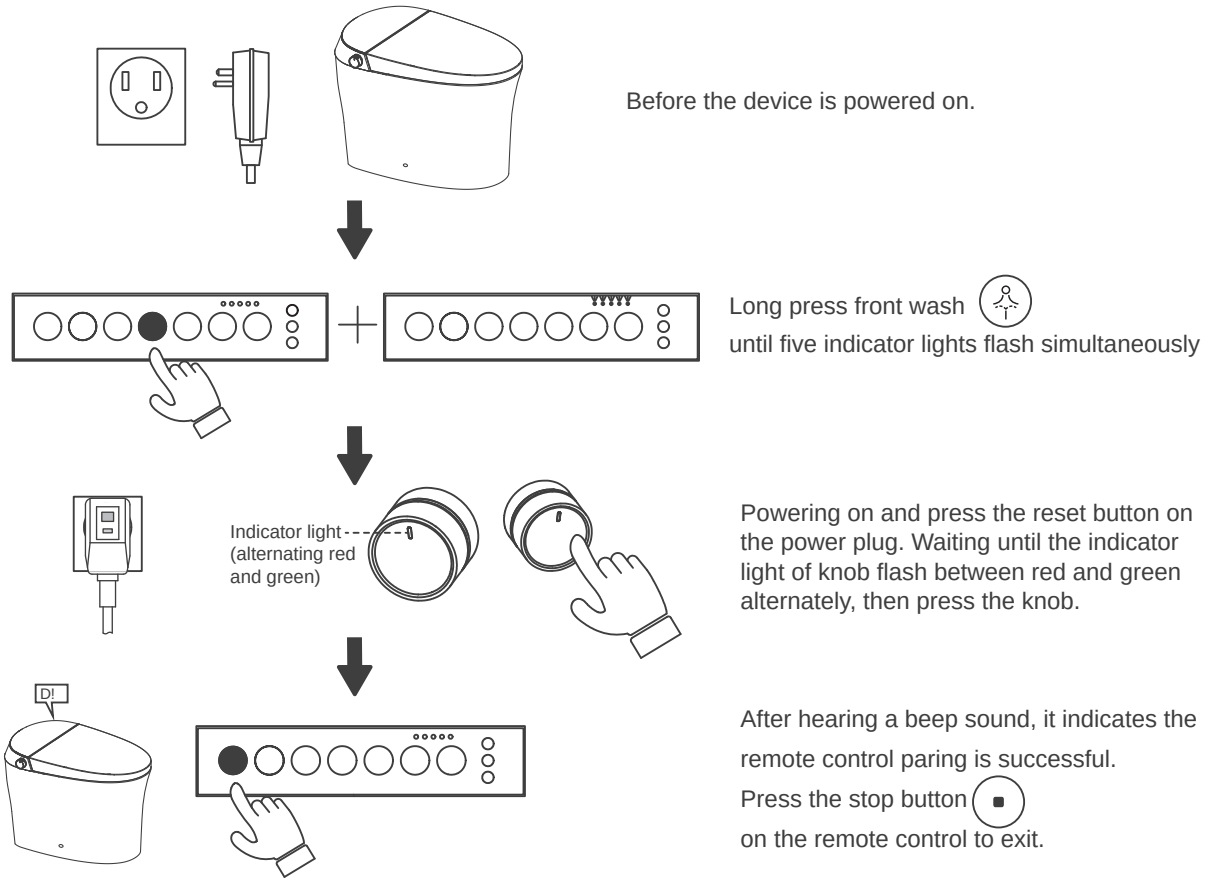

6. Turn on/off the auto flush after leaving seat

Long press the Flush button" "and Rear Wash button" "on the remote control to enter or exit the auto flush function after leaving seat.

7. Standby mode

Long press the knob 5 seconds to enter the standby mode. Press the knob or any button on the remote control to exit the standby mode.

Automatic Function

1. Foot sensor

After toiletting, foot approach the sensor area to perform the flushing function.

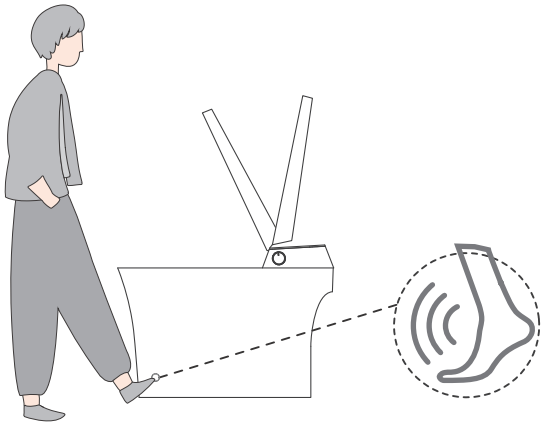

2.Automatic flush after leaving the seat

Under the automatic flush mode, when the user is detected staying on the seat for≥30 seconds, after the user leave the seat for 5±1 seconds, it will perform the automatic flush function.

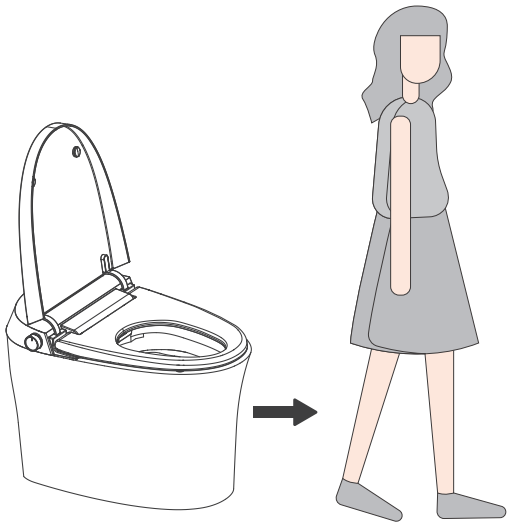

5. Automatic flush stop for protection

When the flushing function perform 5 times successively, it will stop for 30 seconds (other function is normal). After 30 seconds, the flushing function will resume.

6. Flushing during blackout

Under the condition that the spare battery box is connected and has filled battery.

Long press the side button to flush.

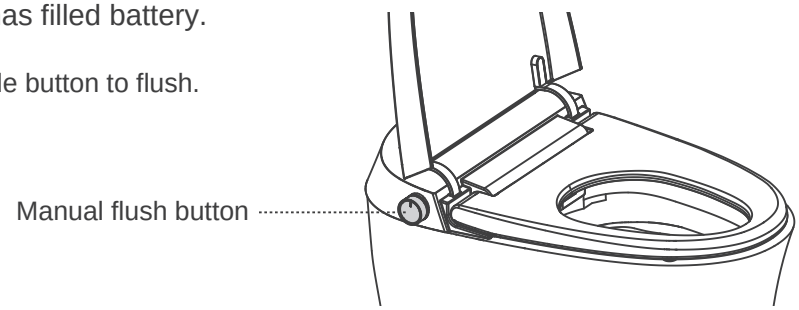

7. Flushing during water outage

Flush the toilet with external water (pour approx. 2 Gallons water into the bowl). Beware of overflow.

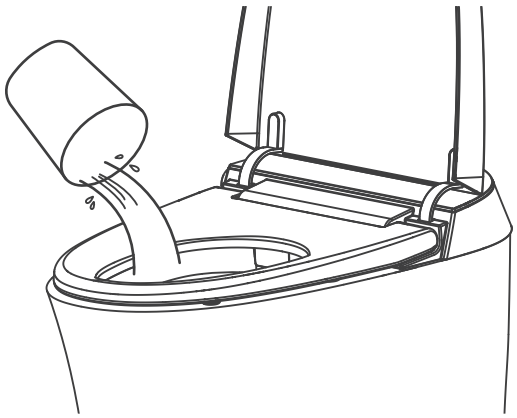

Daily Maintenance

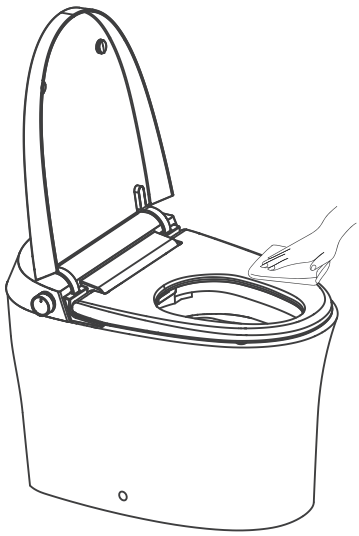

Maintenance of body

1. Cut off the power supply

Please cut off the power supply before maintenance.

2. Wipe with soft cloth

Please wipe the dirty parts with a soft damp cloth and then let it dry.

3. Safety self-inspection

Please reconnect the power supply after cleaning.

Nozzle maintenance

1. Nozzle extends

Press and hold the "Stop" button and "Rear wash" button on the remote control for 3 seconds at the same time to enter the manual cleaning procedure.

2. Nozzle cleaning

Please wipe with a soft cloth or soft brush.

3. Cleaning is completed

Press the "Stop" button to exit the manual cleaning mode and the nozzle will retract automatically.

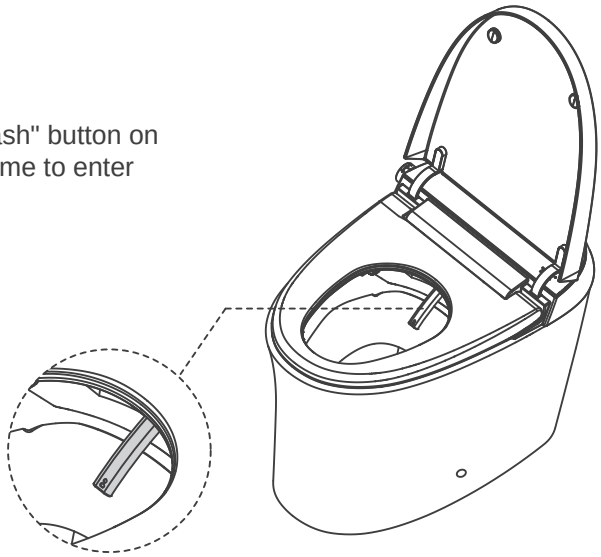

Filter screen cleaning

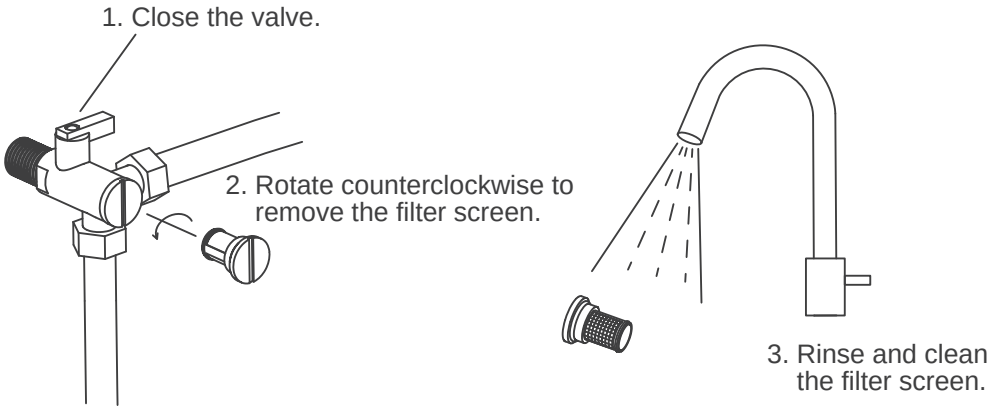

Replace activated carbon

1. Open two rubber plugs, loosen two screws, and pick up two screws and gaskets.

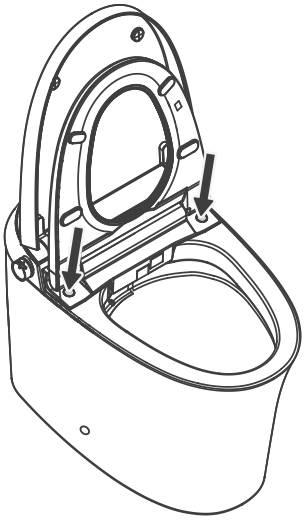

2. Remove the four water pipes, gently lift the base and put it upside down, loosen the screws of the activated carbon and remove the cover.

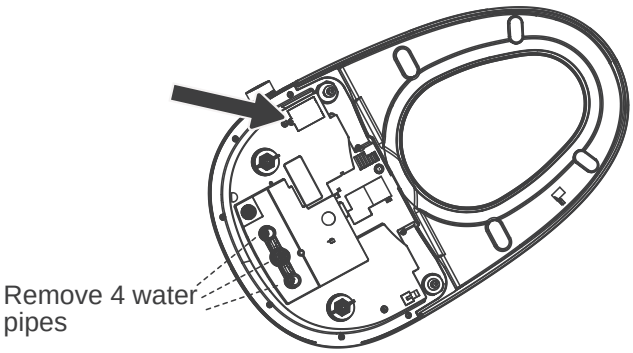

3. **After loosening the tape, pull out the activated carbon,replace it with a new one, and then install the cover and lock it.**

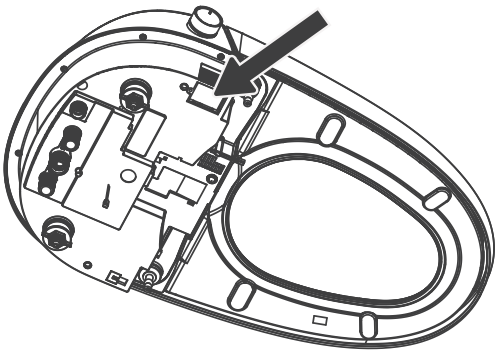

4. **Connect and tighten the four removed water pipes in turn. Put the cover back into the ceramic body, lock the screw and cover the rubber plug.**

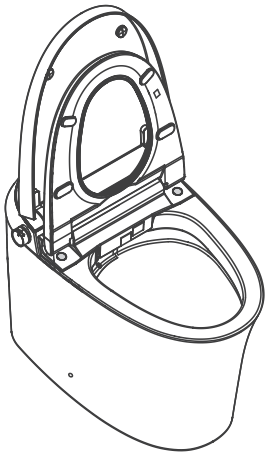

Drain the water in the pipeline when not in use for a long time

1. **Pull out the power plug to cut off the power.**
2. **Close the inlet angle valve, unscrew the hose from the angle valve, drain the water in the pipeline and reinstall it.**

   For safety, it is recommended to put antifreeze into the accumulated water in the toilet.

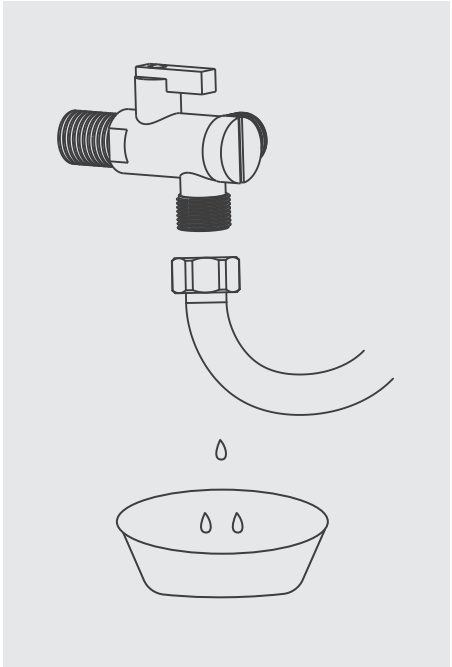

TIPS

Before opening the angle valve, the power must be cut off! When using the toilet again, be sure to connect water supply first, then plug in.

Label illustration

Illustration	Explain
	seat sensor
	foot sensor

Troubleshooting

Product part or function	Phenomenon	Cause	Solutions
Complete machine	Not working	Whether the power supply is off	Power on
		Whether the leakage protector is off	Press the leakage switch again
		Power failure or not	Wait for power supply
Rear wash	Not working	Whether the water supply switch is on	Turn on the water supply switch
		Whether the water supply is cut off	Wait for water supply to recover
		Whether the orifice is blocked by foreign matters	Remove foreign matters and manually clean the nozzle
		No skin contact with seat sensor	Re-adjust sitting position to ensure skin contact with sensor
	Low water pressure	Is the water pressure gear set to low gear	Reset the water pressure gear
		Whether the water supply channel is normal	Clean the filter screen at the water supply outlet and supply water again
	Water temperature is low	Whether the water supply channel is normal	Reset the water temperature gear
	Stop water halfway	Whether the automatic stop time is exceeded	Re-execute the function
		No skin contact with seat sensor	Re-adjust sitting position to ensure skin contact with sensor
Warm air drying	Low heating temperature	Whether the wind temperature gear is set to low gear	Reset the water temperature gear
	Half-way stop	Whether the automatic stop time is exceeded	Re-execute the function
		No skin contact with seat sensor	Re-adjust sitting position to ensure skin contact with sensor
Seat ring heating	Insufficient seat ring temperature	Is the seat temperature gear set to low gear	Reset the seat temperature gear
Deodorization	Machine did not start	No skin contact with seat sensor	Re-adjust sitting position to ensure skin contact with sensor
Remote control	No reaction	Objects cover the sensing window	Remove the objects
		Incorrect use angle and sensing distance	Adjust angle and distance
		Batteries run out	Replace with new batteries

Fault Code

Category	Fault classification	Fault location	Cause	Symptoms	Solutions	Fault alarm	Fault display code
1	Complete machine failure	Random	Multiple sensors have failed	The whole machine does not work normally	Remove the fault after the whole machine works normally	All lights flash and buzzer sounds for 3 seconds	EE
2	Instant heating module	Abnormal communication	Abnormal signal of instant heating plate	Water stop heating and cleaning stop	The fault is removed after communication is restored	All lights flash and buzzer sounds for 3 seconds	E1
3	Flow	Water is still running after the function is over	After the function is stopped, the rear or front washes all the time	Uncontrolled rear or front washing	Fault removal after control	All lights flash and buzzer sounds for 3 seconds	E2
4		Inlet flow	The flow meter has no flow after the inlet valve is opened	The water stops heating and other functions work normally	Fault removal after flow recovery	All lights flash and buzzer sounds for 3 seconds	E3
5	Gearbox	Gearbox stuck	Can't flip	Flip function stop	Fault removal after recovery	All lights flash and buzzer sounds for 3 seconds	E4
6	Knob	Knob does not respond	No response when the knob is turned counterclockwise	The buttock wash function knob light flashes	Fault removal after recovery	The three-color light on the knob flashes in turn, and the buzzer rings for 3 seconds	E5
7			No response when the knob is turned clockwise	The knob light of the women's washing function does not flash	Fault removal after recovery	The three-color light on the knob flashes in turn, and the buzzer rings for 3 seconds	E6
8			No response when pressing the knob	Stop function knob lamp flashes	Fault removal after recovery	Tri-color on knob Lights flash in turn, bees Sounder sounds for 3 seconds	E7
9	Water temperature	Inlet NTC	Water inlet NTC open circuit or short circuit	Water stop heating and cleaning stop	Fault removal after NTC recovery	The water temperature indicator flashes and the buzzer sounds for 3 seconds	A1
10		Inlet NTC	Inlet water temperature > 107.6℉	Water stop heating and cleaning stop	Fault removal after temperature recovery	The water temperature indicator flashes and the buzzer sounds for 3 seconds	A2
11		Inlet NTC	Outlet NTC open circuit or short circuit	Water stop heating and cleaning stop	Fault removal after NTC recovery	The water temperature indicator flashes and the buzzer sounds for 3 seconds	A3
12		Inlet NTC	Outlet water temperature > 107.6℉	Water stop heating and cleaning stop	Fault removal after temperature recovery	The water temperature indicator flashes and the buzzer sounds for 3 seconds	A4
13		Inlet NTC	Inlet water temperature is the same as outlet water temperature (no temperature rise)	Water stop heating and cleaning stop	Fault removal after temperature recovery	The water temperature indicator flashes and the buzzer sounds for 3 seconds	A5
14	Wind temperature	Wind temperature NTC	Air temperature NTC open circuit or short circuit	Drying stop heating	Fault removal after temperature recovery	The wind temperature indicator flashes and the buzzer sounds for 3 seconds	C1
15			Wind temperature NTC > 149℉	Drying stop heating	Fault removal after NTC recovery	The wind temperature indicator flashes and the buzzer sounds for 3 seconds	C2
16			No temperature rise	Drying stop heating	Fault removal after temperature recovery	The wind temperature indicator flashes and the buzzer sounds for 3 seconds	C3
17	Seat temperature	Seat temperature NTC	Seat temperature NTC open circuit	Seat temperature stop heating	Fault removal after temperature recovery	Seat temperature indicator flashes and buzzer sounds for 3 seconds	H1
18			Seat temperature NTC > 107.6℉	Seat temperature stop heating	Fault removal after NTC recovery	Seat temperature indicator flashes and buzzer sounds for 3 seconds	H2

CANEST®

Get free technical support for the lifetime of your product.

Email: service@canesthome.com

Phone: (+1) 702-824-3195