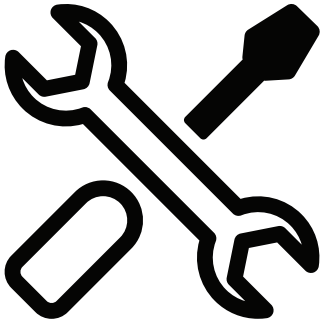

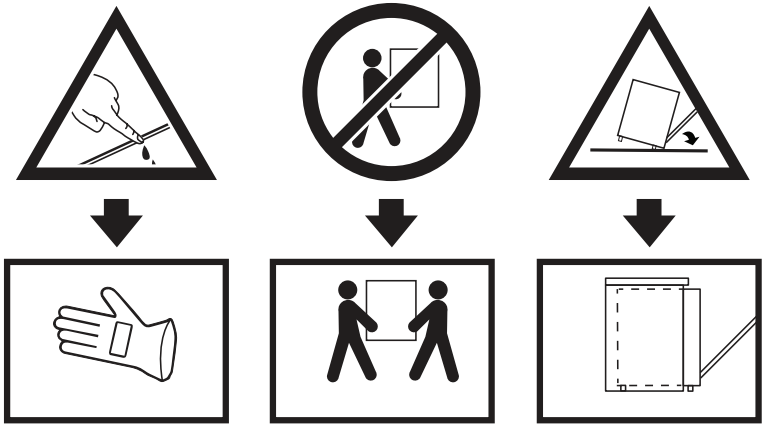

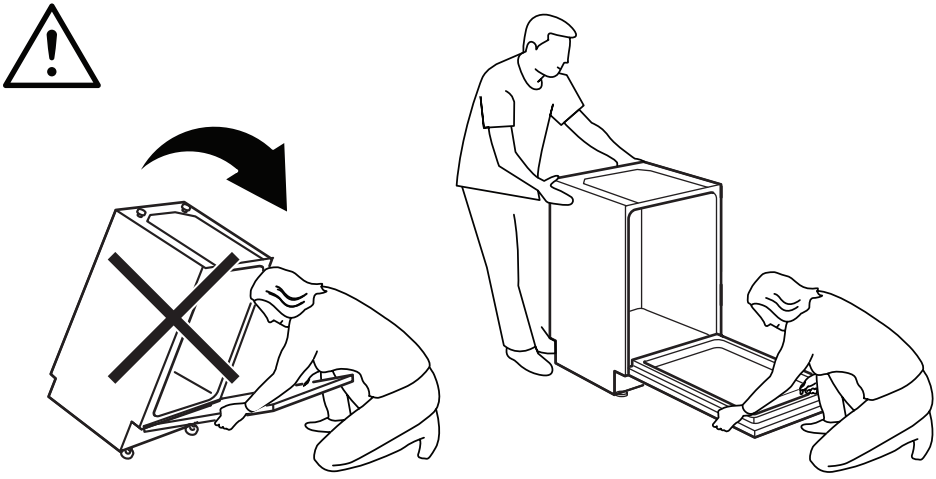

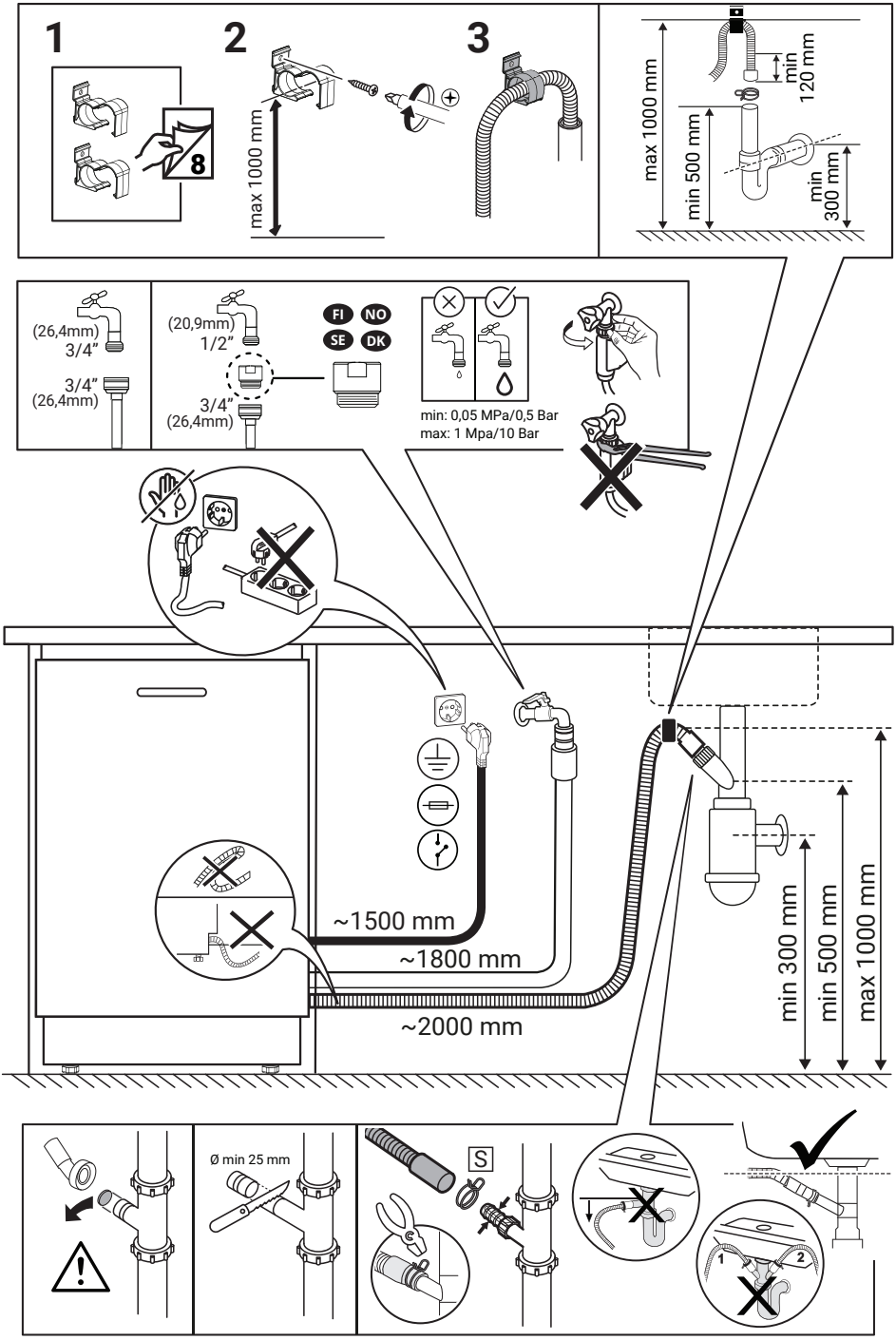
1
2
3
8
max 1000 mm
min 120 mm
max 1000 mm
min 500 mm
min 300 mm
(26,4mm) 3/4"
3/4" (26,4mm)
(20,9mm) 1/2"
3/4" (26,4mm)
FI
NO
SE
DK
min: 0,05 MPa/0,5 Bar
max: 1 Mpa/10 Bar
~1500 mm
~1800 mm
~2000 mm
min 300 mm
min 500 mm
max 1000 mm
Ø min 25 mm
S
1
2

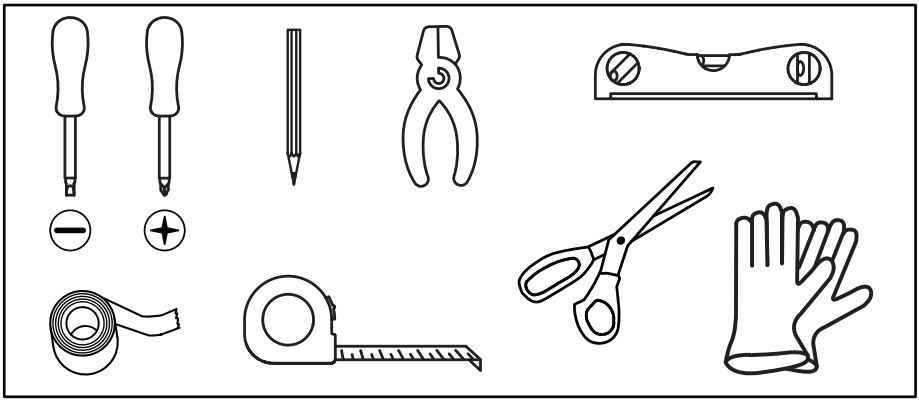

Ø 4 x 13 mm A **4x**	Ø 4 x 36 mm B **4x**	Ø 3,5 x 14 mm E **2x**	Ø 4 x 6 mm C **2x**	D **2x**
H **1x**	L **1x**	R **1x**	F **4x**	K **4x**
M **2x**	S **1x**	N **1x**	P **1x**	O **1x**

1

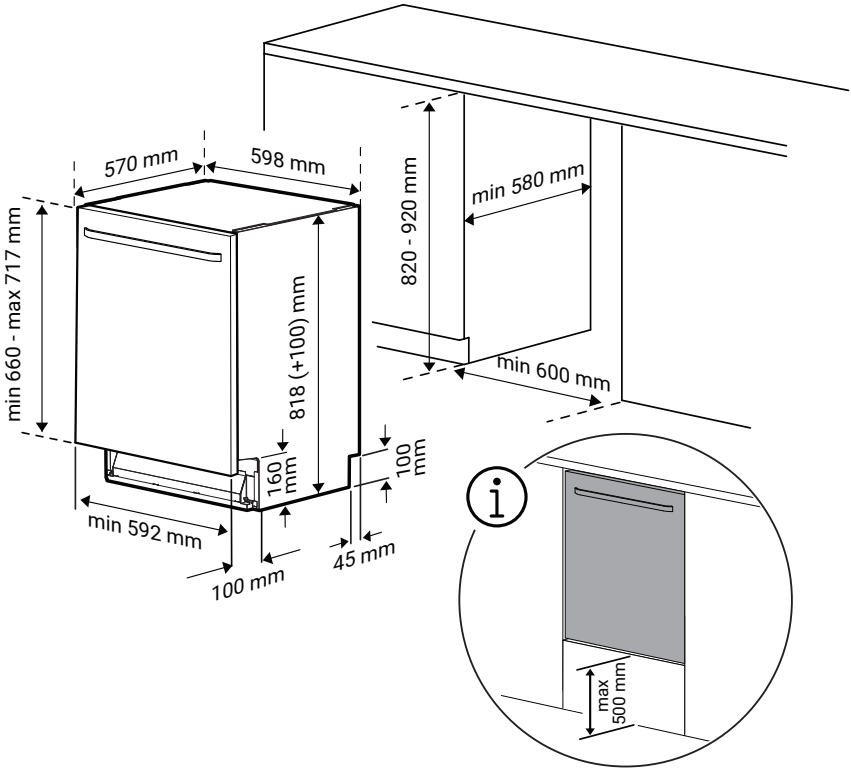
570 mm
598 mm
min 660 - max 717 mm
818 (+100) mm
820 - 920 mm
min 580 mm
min 600 mm
160 mm
100 mm
min 592 mm
100 mm
45 mm
max 500 mm

2

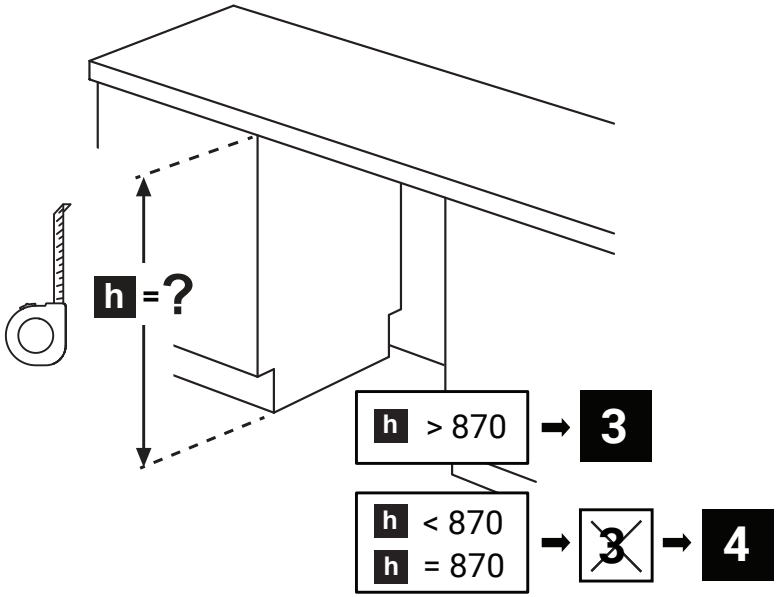
h = ?
h > 870
3
h < 870
h = 870
3
4

3

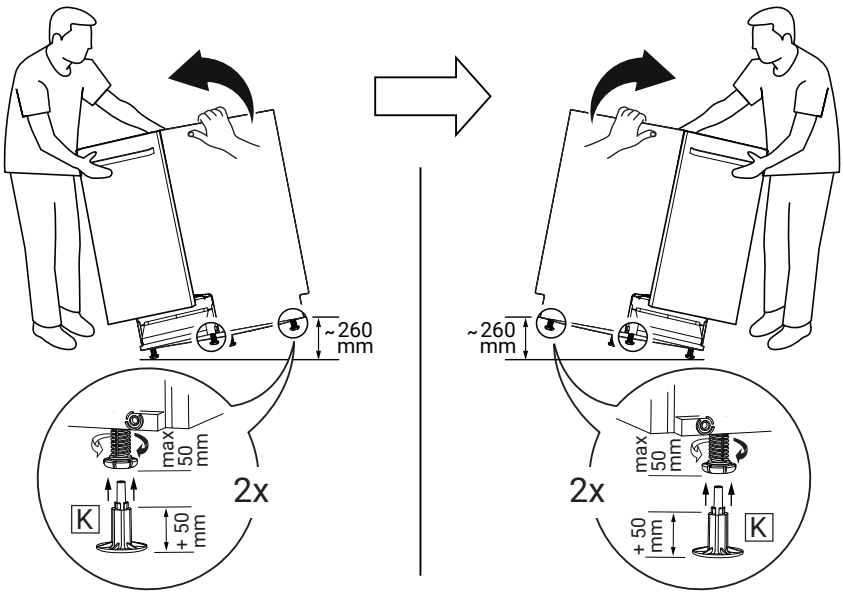

4

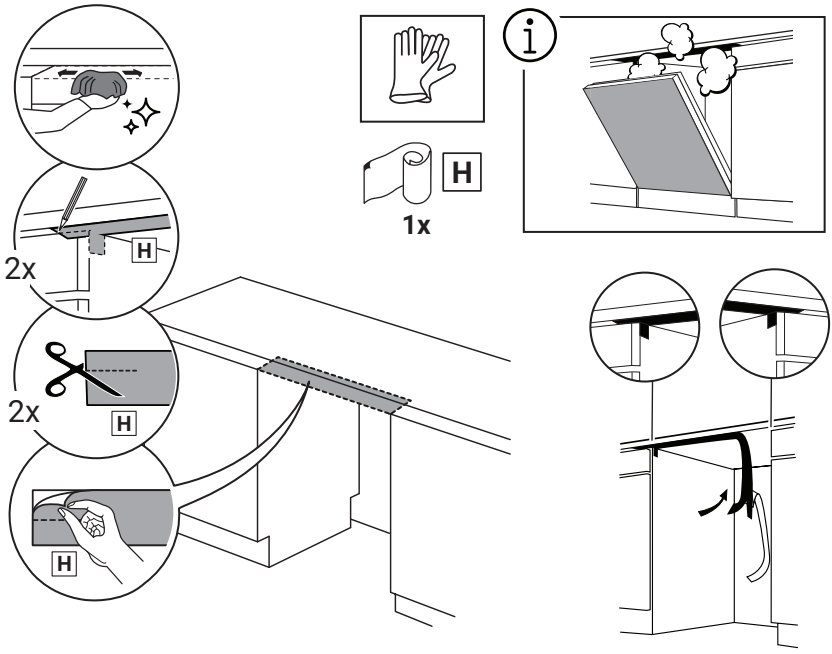

5

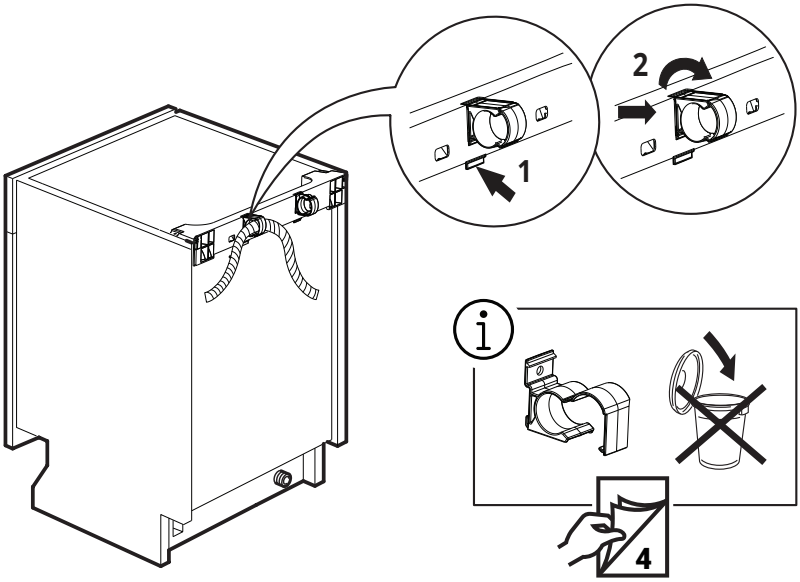

6

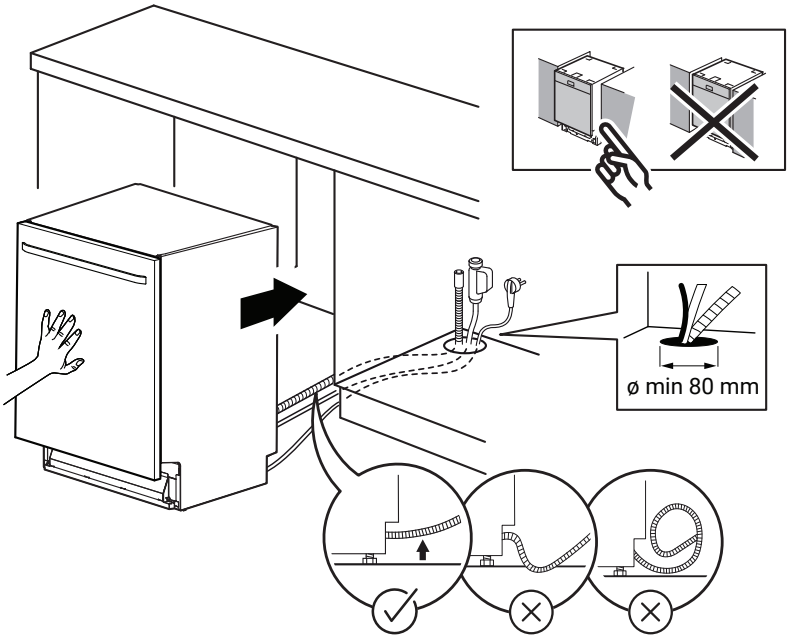

7

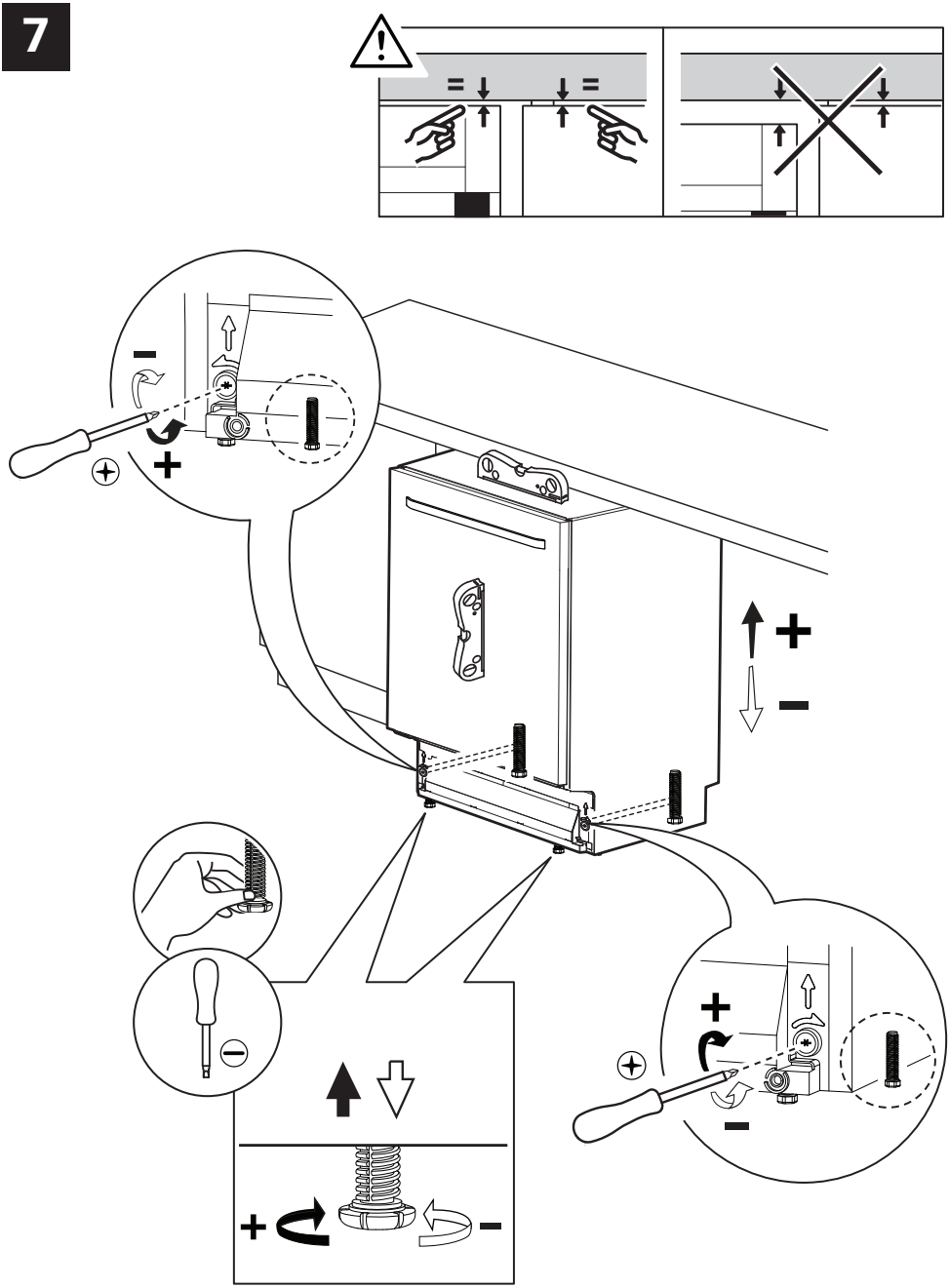

8

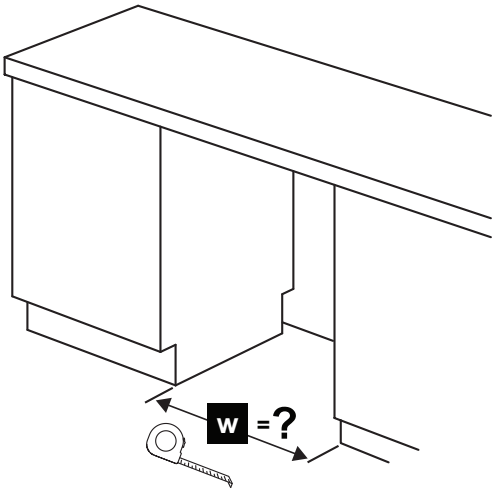
w =?

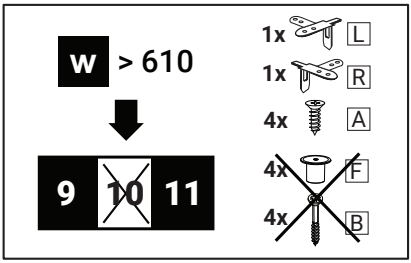
w > 610
9 10 11
1x L
1x R
4x A
4x F
4x B

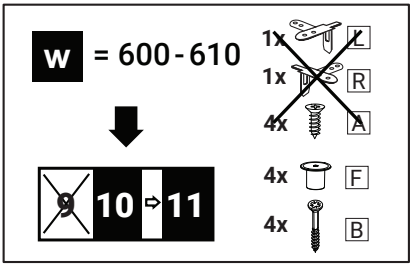
w = 600 - 610
9 10 ⇨ 11
1x L
1x R
4x A
4x F
4x B

9 | a

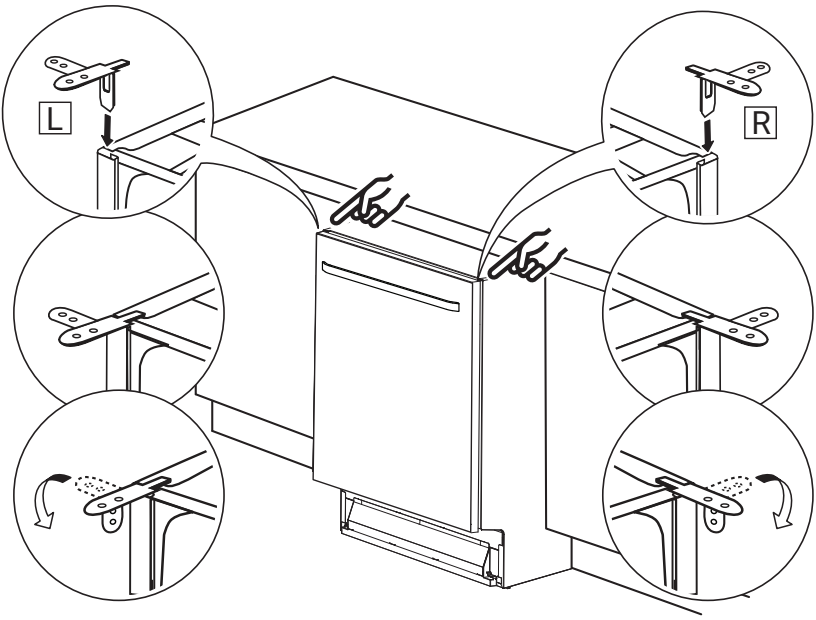
L
R

9
b

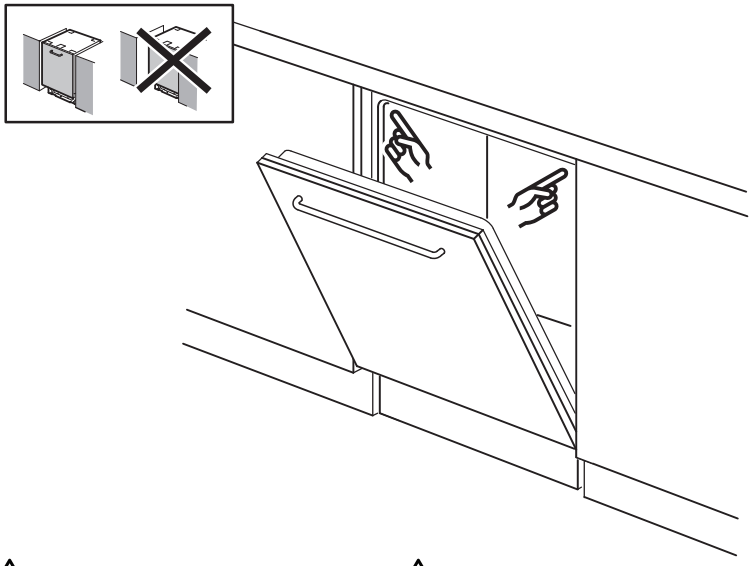

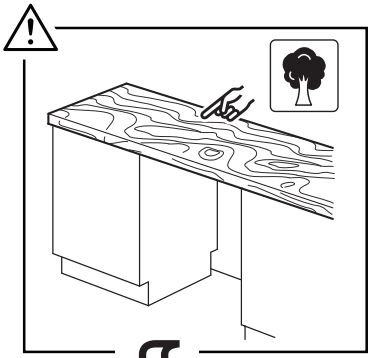

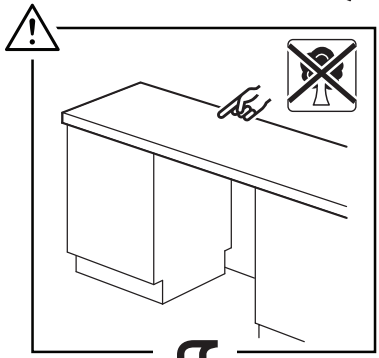

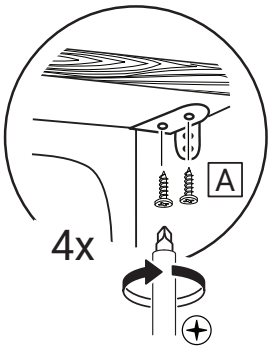

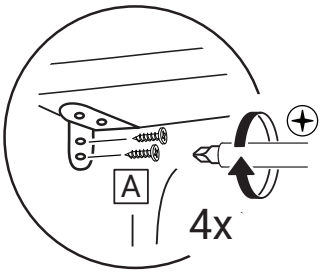

10 a

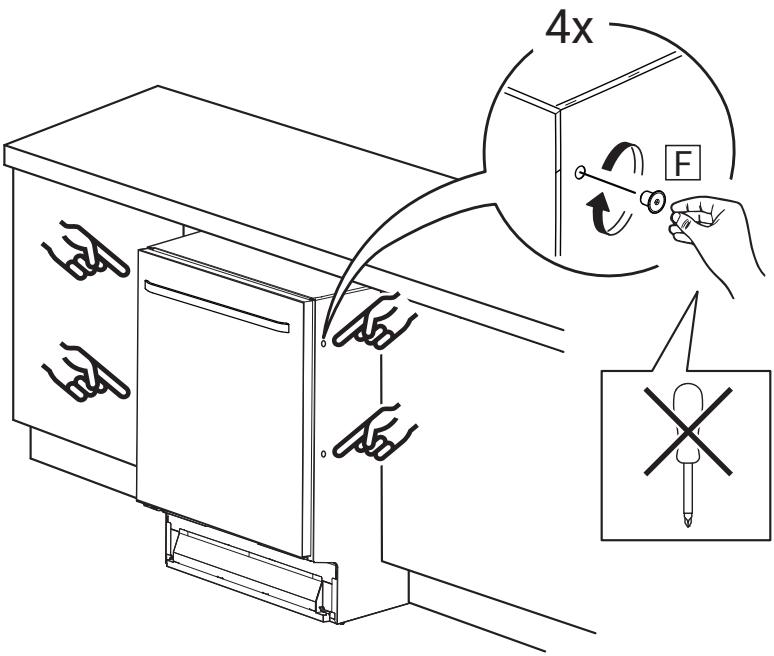

10 b

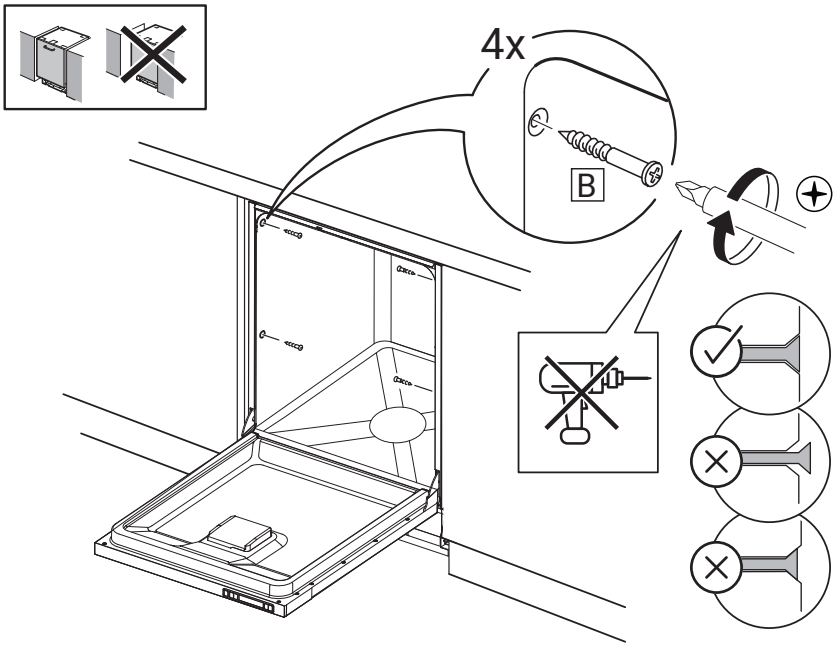

11

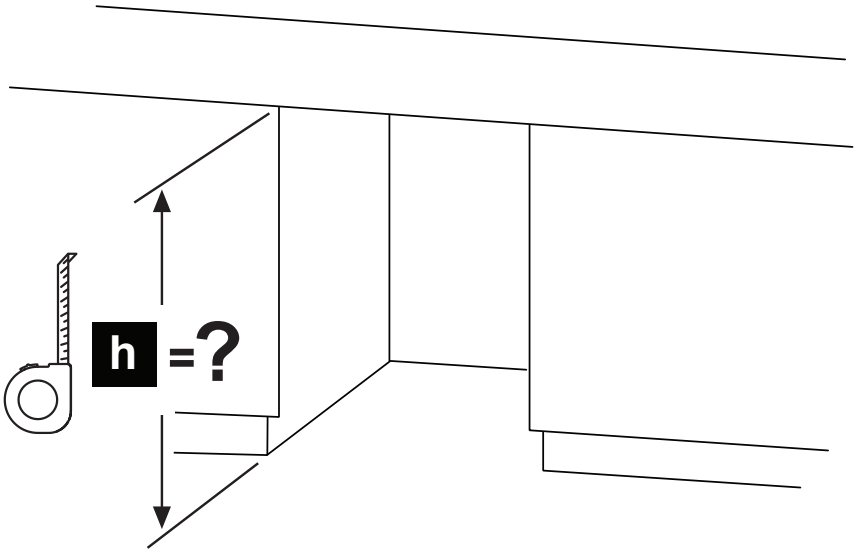
h =?

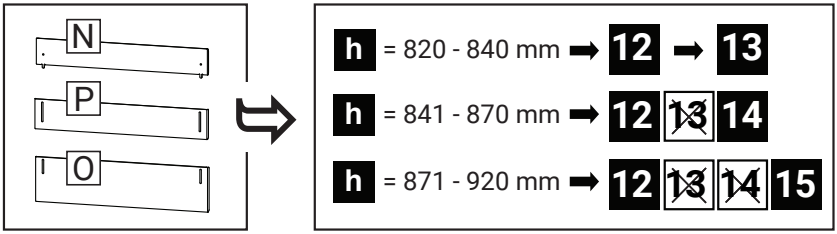
N
P
O
h = 820 - 840 mm ➡ 12 ➡ 13
h = 841 - 870 mm ➡ 12 13 14
h = 871 - 920 mm ➡ 12 13 14 15

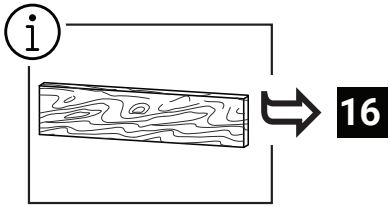
16

12

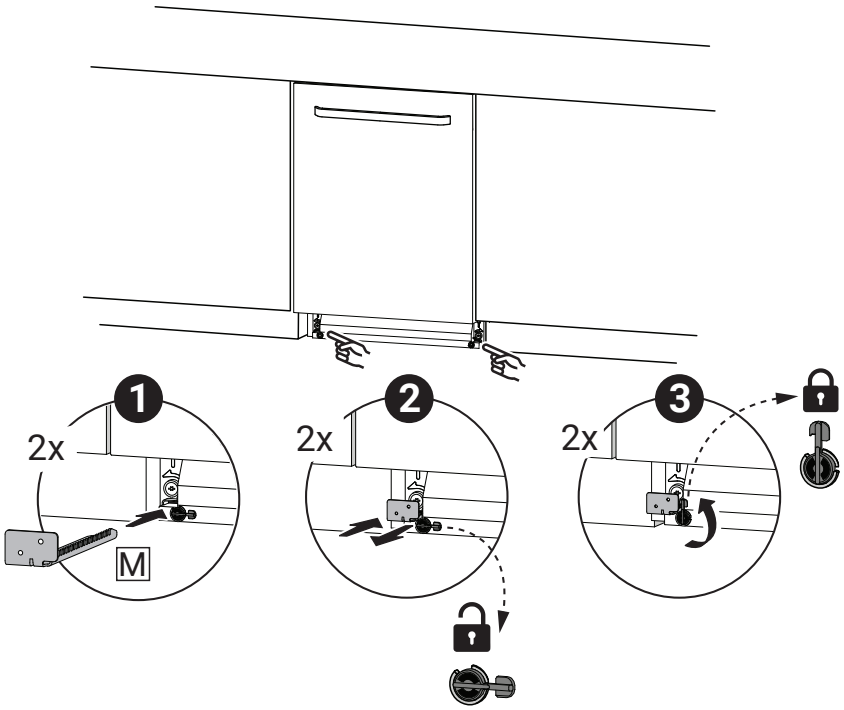

13

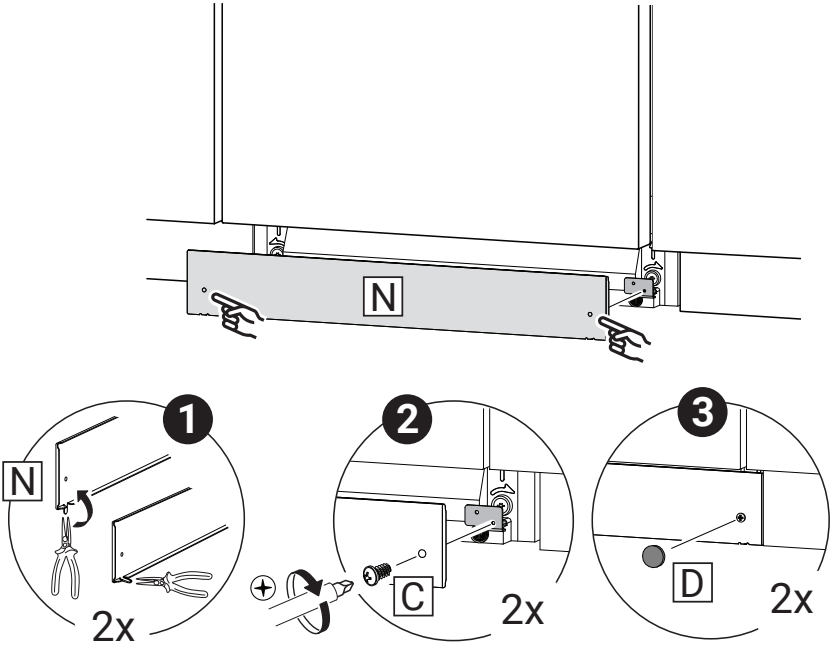

14

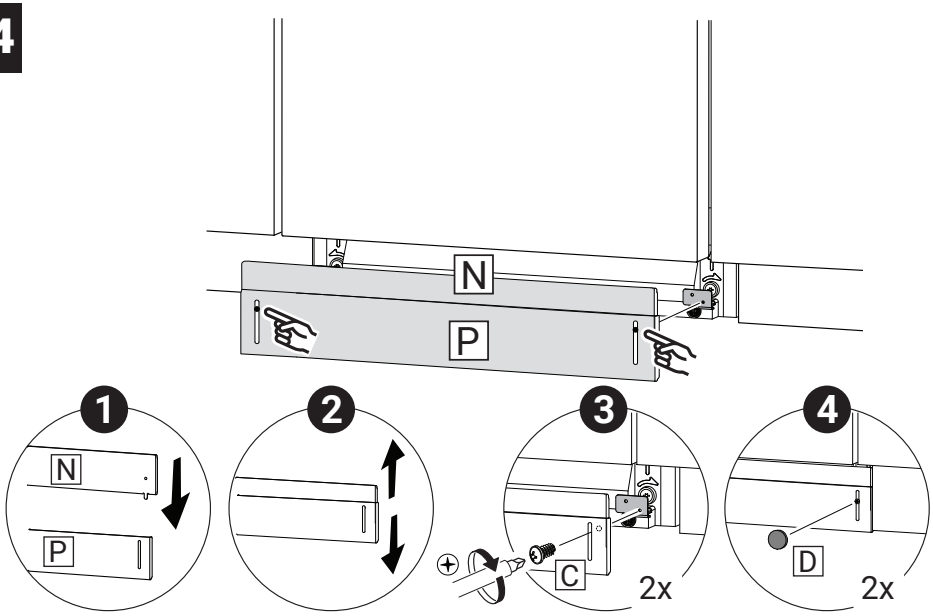

15

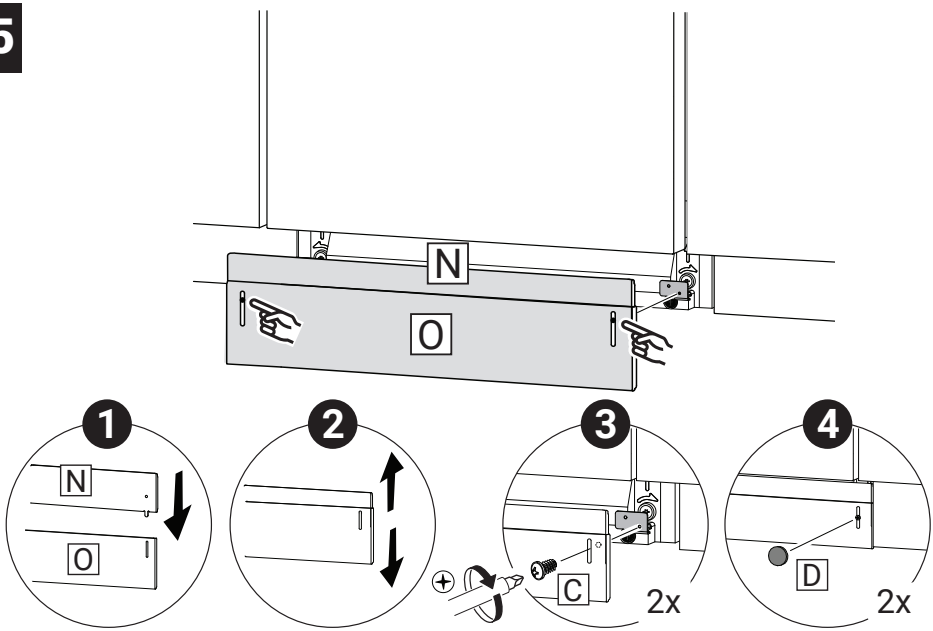

16

