WORX NITRO

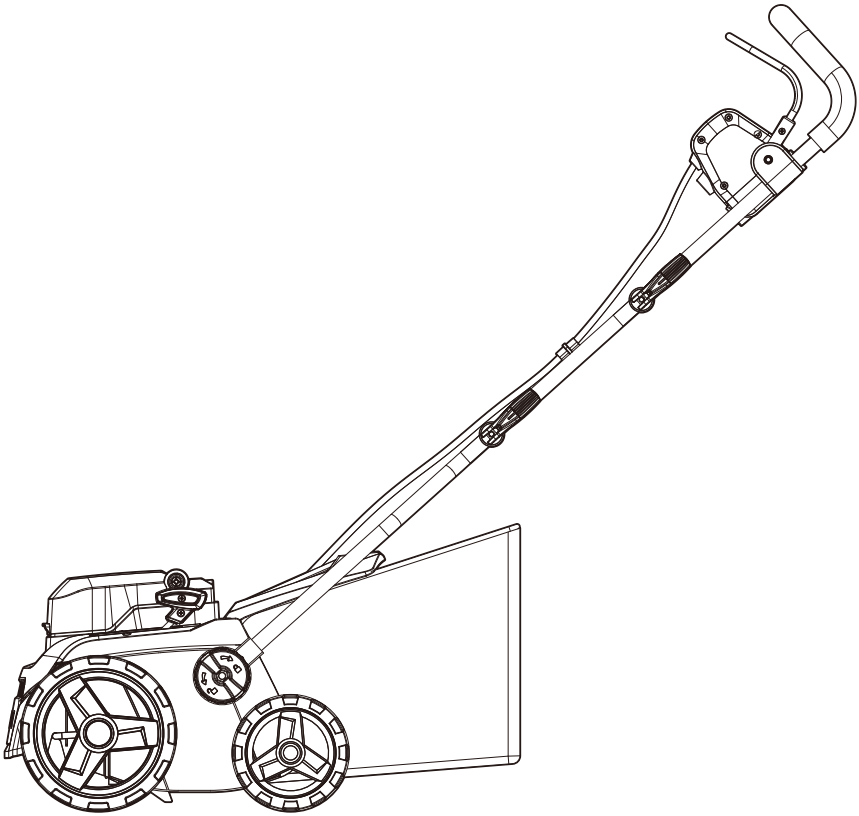

2x20V Dethatcher	EN	P02
2x20V Dethatcher	F	P18
2x20V Dethatcher	ES	P30

WG855 WG855.X

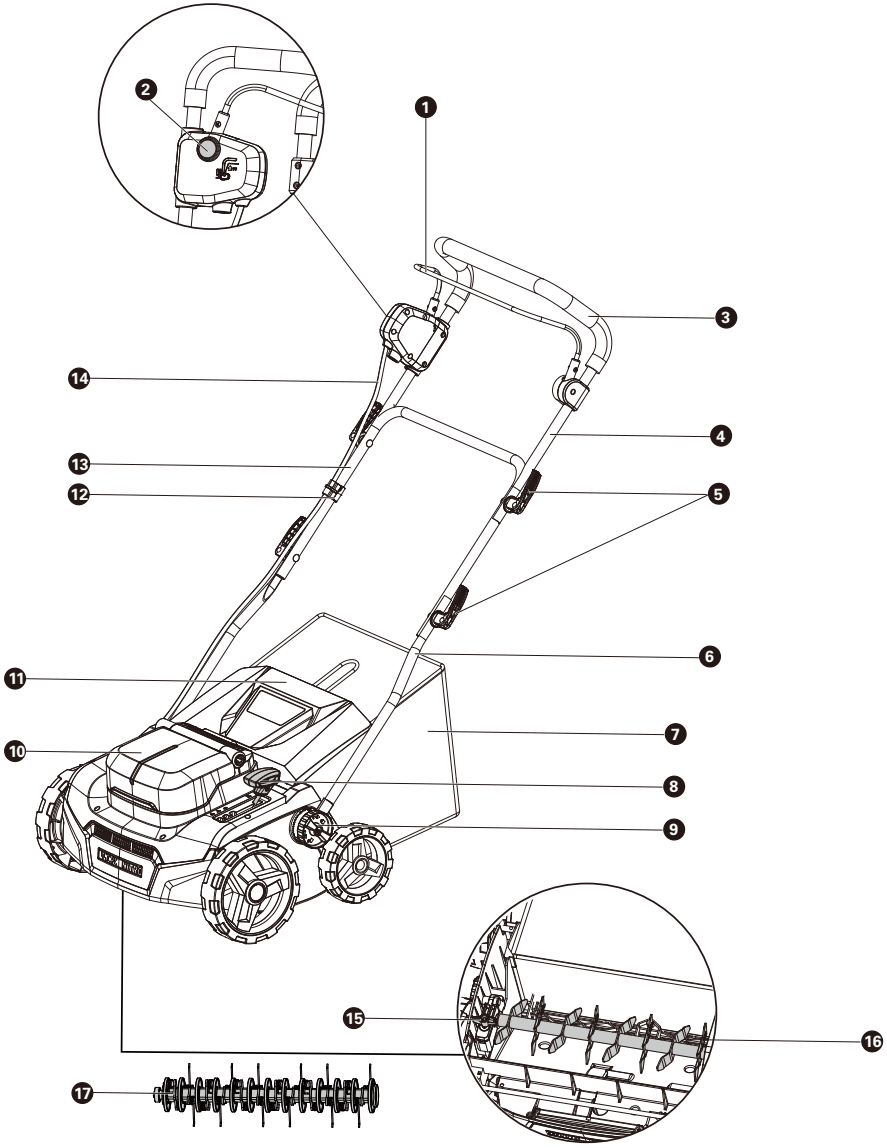
1
2
3
4
5
6
7
8
9
10
11
12
13
14
15
16
17

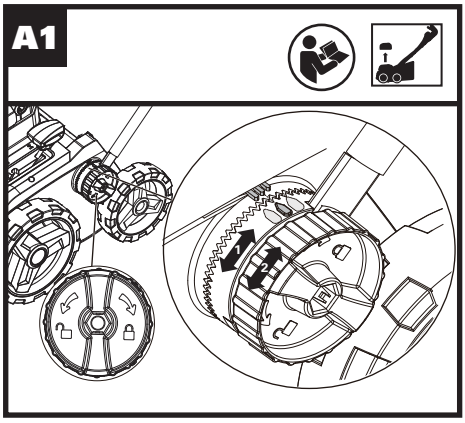
A1

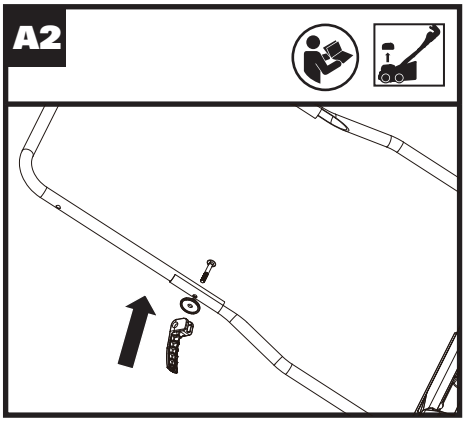
A2

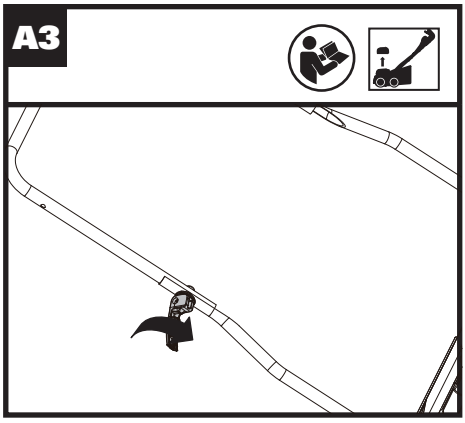
A3

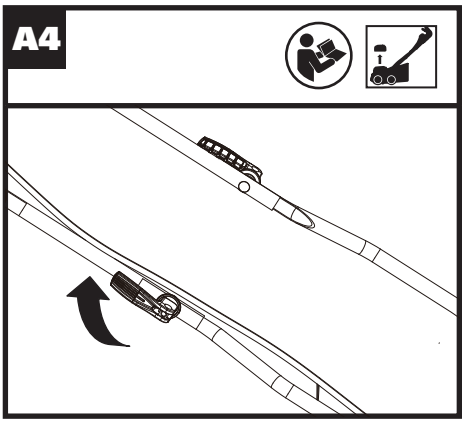
A4

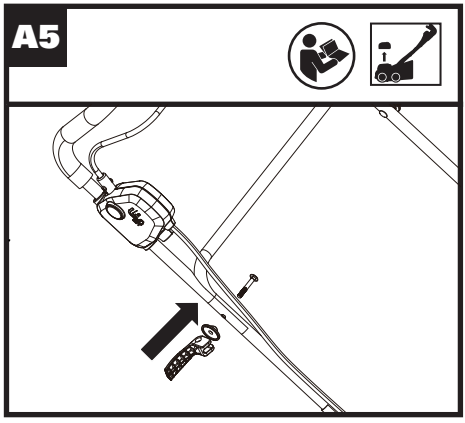
A5

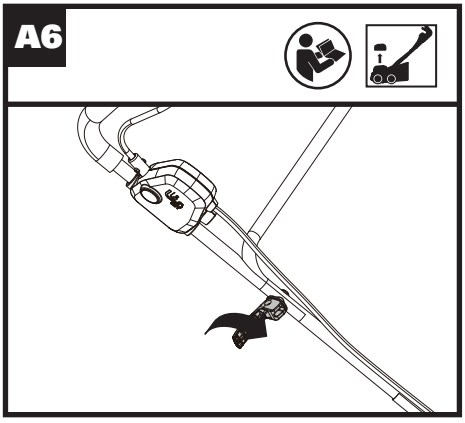
A6

A7

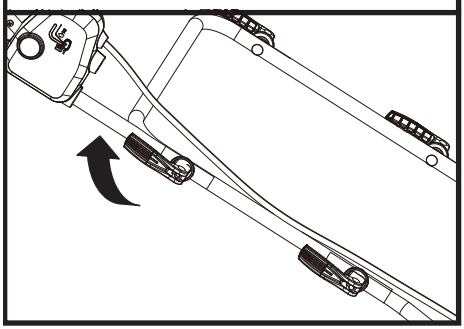

B

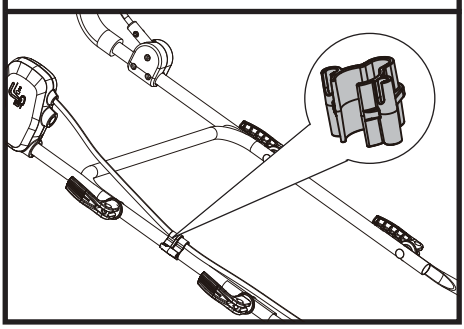

C

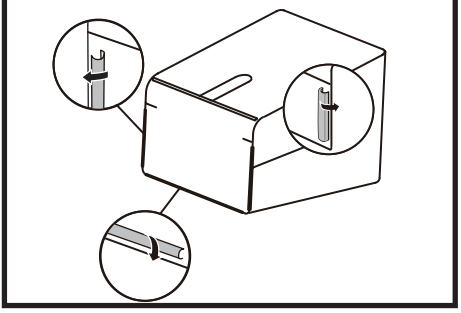

D

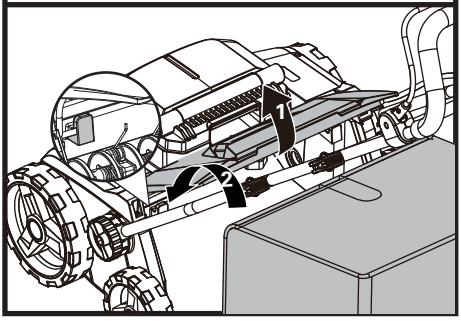

E1

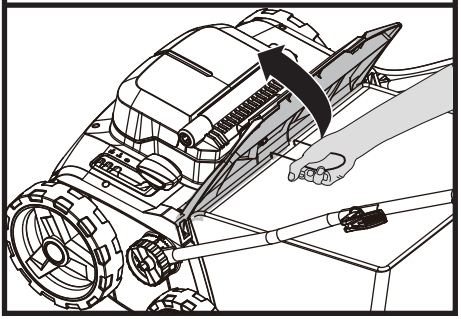

E2

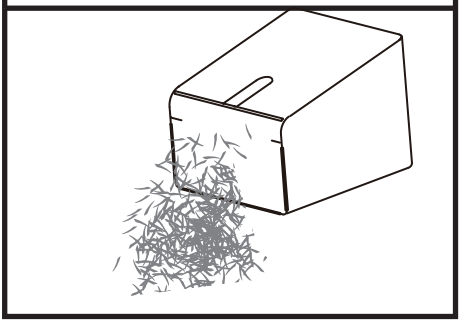

F1

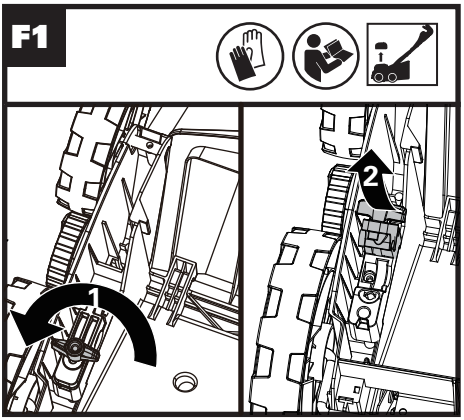

F2

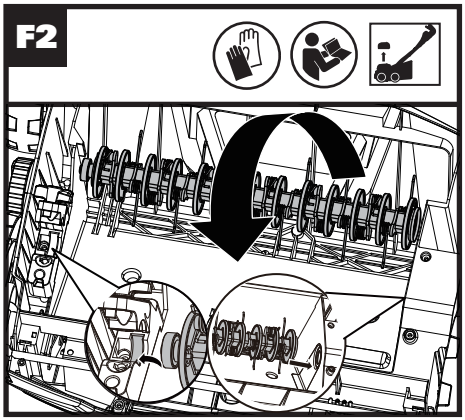

F3

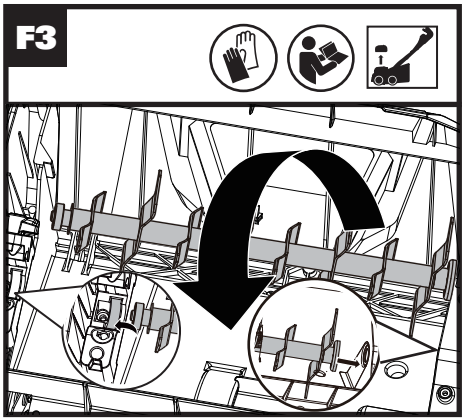

G1

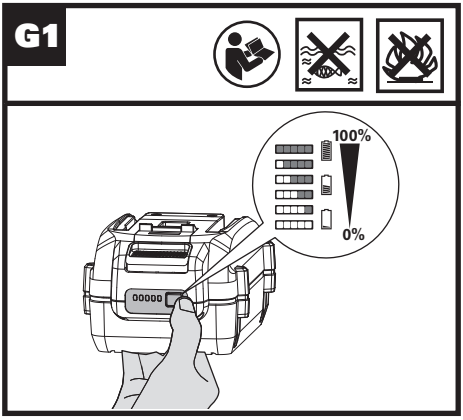

G2

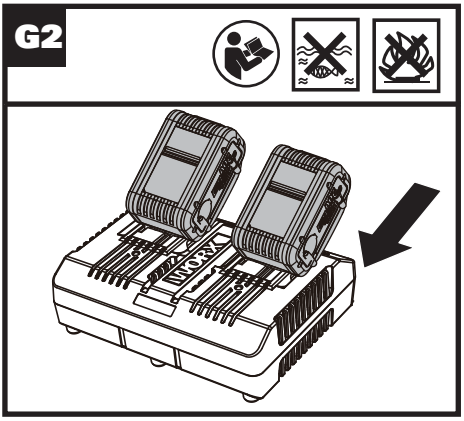

H

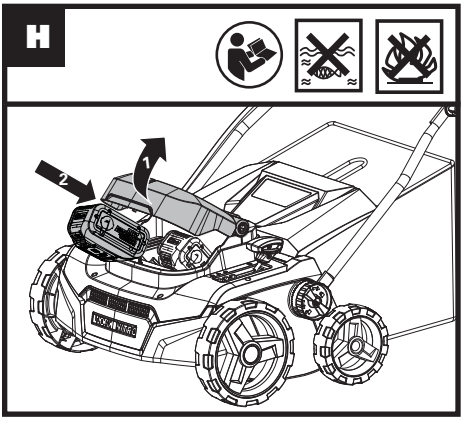

I

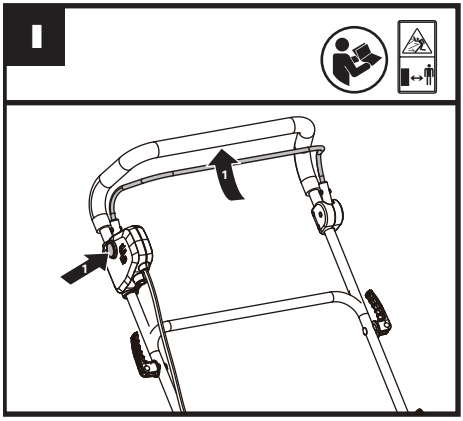

J

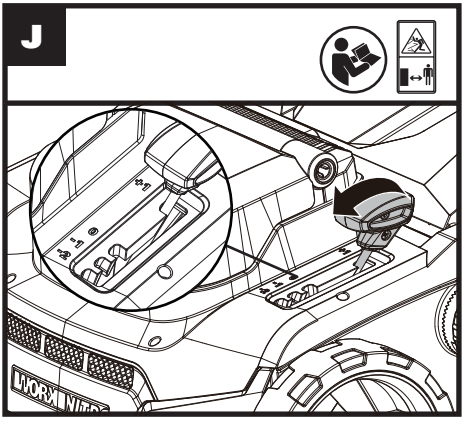

K

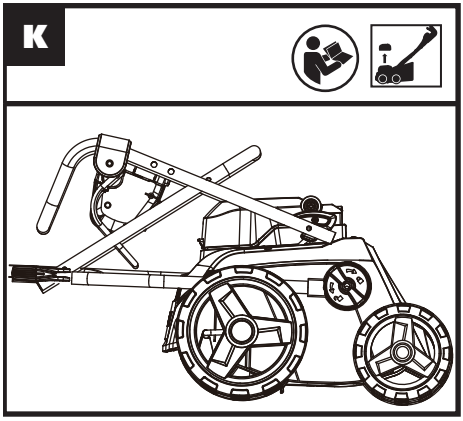

TABLE OF CONTENT

1. PRODUCT SAFETY
2. COMPONENT LIST
3. TECHNICAL DATA
4. INTENDED USE
5. OPERATING INSTRUCTIONS
6. MAINTENANCE
7. TROUBLESHOOTING

1.PRODUCT SAFETY

WARNING: Some dust created by power sanding, sawing, grinding, drilling and other construction activities contains chemicals known to the State of California to cause cancer, birth defects or other reproductive harm. Some examples of these chemicals are:

- Lead from lead-based paints;
- Crystalline silica from bricks and cement and other masonry products;
- Arsenic and chromium from chemically-treated lumber.

Your risk from these exposures varies, depending on how often you do this type of work. To reduce your exposure to these chemicals: work in a well ventilated area, and work with approved safety equipment, such as those dust masks that are specially designed to filter out microscopic particles.

WARNING: This product can expose you to chemicals including lead and Di(2-ethylhexyl)phthalate (DEHP) which are known to the State of California to cause cancer and birth defects or other reproductive harm. For more information go to www.P65Warnings.ca.gov.

Important Safety Instructions

WARNING: Read all safety warnings and instructions. Failure to follow the warnings and instructions may result in electric shock, fire and/or serious injury

FOR ALL APPLIANCES:

1) Avoid Dangerous Environment - Don't use appliances in damp or wet locations.
2) Don't Use In Rain.
3) Keep Children Away - All visitors should be kept at a distance from work area.
4) Dress Properly - Do not wear loose clothing or jewelry. They can be caught in moving parts. Use of rubber gloves and substantial footwear is recommended when working outdoors. Wear protective hair covering to contain long hair.
5) Use Safety Glasses - Always use face or dust mask if operation is dusty.
6) Use Right Appliance - Do not use appliance for any job except that for which it is intended.
7) Don't Force Appliance - It will do the job better and with less likelihood of a risk of injury at the rate for which it was designed.
8) Don't Overreach - Keep proper footing and balance at all times.
9) Stay Alert - Watch what you are doing. Use common sense. Do not operate appliance when you are tired.
10) Store Idle Appliances Indoors - When not in use, appliances should be stored indoors in dry, and high or locked-up place - out of reach of children.
11) Maintain Appliance With Care - Keep cutting edge sharp and clean for best performance and to reduce the risk of injury. Follow instructions for lubricating and changing accessories. Keep handles dry, clean, and free from oil and grease.
12) Check Damaged Parts - Before further use of the appliance, a guard or other part that is damaged should be carefully checked to determine that it will operate properly and perform its intended function. Check for alignment of moving parts, binding of moving parts, breakage of parts, mounting, and any other condition that may affect its operation. A guard or other part that is damaged should be properly repaired or replaced by an authorized service center unless indicated elsewhere in this manual.

FOR ALL BATTERY – OPERATED GARDENING APPLIANCES:

1. Prevent unintentional starting. Ensure the switch is in the off-position before connecting to battery pack, picking up or carrying the appliance. Carrying the appliance with your finger on the switch or energizing appliance that have the switch on invites accidents.
2. Disconnect the battery pack from the appliance before making any adjustments, changing accessories, or storing appliance. Such preventive safety measures reduce the risk of starting the appliance accidentally.
3. Recharge only with the charger specified by the manufacturer .A charger that is suitable for one type of battery pack may create a risk of fire when used with another battery pack.
4. Use appliances only with specifically designated battery packs. Use of any other battery packs may create a risk of injury and fire.
5. When battery pack is not in use, keep it away from other metal objects, like paper clips, coins,

keys, nails, screws or other small metal objects, that can make a connection from one terminal to another. Shorting the battery terminals together may cause burns or a fire.

6. Under abusive conditions, liquid may be ejected from the battery; avoid contact. If contact accidentally occurs, flush with water. If liquid contacts eyes, additionally seek medical help. Liquid ejected from the battery may cause irritation or burns.
7. Do not use a battery pack or appliance that is damaged or modified. Damaged or modified batteries may exhibit unpredictable behavior resulting in fire, explosion or risk of injury.
8. Do not expose a battery pack or appliance to fire or excessive temperature. Exposure to fire or temperature above 130°C may cause explosion.
9. Follow all charging instructions and do not charge the battery pack or appliance outside of the temperature range specified in the instructions. Charging improperly or at temperatures outside of the specified range may damage the battery and increase the risk of fire.
10. Have servicing performed by a qualified repair person using only identical replacement parts. This will ensure that the safety of the product is maintained.
11. Do not modify or attempt to repair the appliance or the battery pack (as applicable) except as indicated in the instructions for use and care.

ADDITIONAL SAFETY WARNINGS FOR YOUR LAWN DETHATCHER

a) Do not expose the machine to rain or wet conditions. Water entering the machine will increase the risk of electric shock
b) Do not use the machine in bad weather conditions, especially when there is a risk of lightning. This decreases the risk of being struck by lightning.
c) Thoroughly inspect the area for wildlife where the machine is to be used. Wildlife may be injured by the machine during operation.
d) Thoroughly inspect the area where the machine is to be used and remove all stones, sticks, wires, bones, and other foreign objects. Thrown objects can cause personal injury.
e) Before using the machine, always visually inspect to see that the tines and the tines assembly are not worn or damaged. Worn or damaged parts increase the risk of injury.
f) Check the catcher frequently for wear or deterioration. A worn or damaged catcher may increase the risk of personal injury.
g) Keep guards in place. Guards must be in working order and be properly mounted. A guard that is loose, damaged, or is not functioning correctly may result in personal injury.
h) Keep all cooling air inlets clear of debris. Blocked air inlets and debris may result in overheating or risk of fire.
i) While operating the machine, always wear non-slip and protective footwear. Do not operate the machine when barefoot or wearing open sandals. This reduces the chance of injury to the feet from contact with the moving tines.
j) While operating the machine, always wear long trousers. Exposed skin increases the likelihood of injury from thrown objects.
k) Do not operate the machine in wet grass. Walk, never run. This reduces the risk of slipping and falling which may result in personal injury.
l) Do not operate the machine on excessively steep slopes. This reduces the risk of loss of control, slipping and falling which may result in personal injury.
m) When working on slopes, always be sure of your footing, always work across the face of slopes, never up or down and exercise extreme caution when changing direction. This reduces the risk of loss of control, slipping and falling which may result in personal injury.
n) Use extreme caution when reversing or pulling the machine towards you. Always be aware of your surroundings. This reduces the risk of tripping during operation.
o) Hold the machine by insulated gripping surfaces only, because the tines may contact hidden wiring Tines contacting a “live” wire may make exposed metal parts of the machine “live” and could give the operator an electric shock.
p) Do not touch tines and other hazardous moving parts while they are still in motion. This reduces the risk of injury from moving parts.
q) When clearing jammed material or cleaning the machine, make sure all power switches are off and the battery pack is disconnected. Unexpected operation of the machine may result in serious personal injury.

SAFETY WARNINGS FOR BATTERY PACK

a) Do not dismantle, open or shred cells or battery pack.
b) Do not expose battery pack to heat or fire. Avoid storage in direct sunlight.
c) Do not short-circuit a battery pack. Do not store battery packs haphazardly in a box or drawer where they may short-circuit each other or be short-circuited by conductive materials. When battery pack is not in use, keep it away from other metal objects, like paper clips, coins, keys, nails,

screws or other small metal objects, that can make a connection from one terminal to another. Shorting the battery terminals together may cause burns or a fire.

d) Do not subject battery pack to mechanical shock.
e) In the event of battery leaking, do not allow the liquid to come into contact with the skin or eyes. If contact has been made, wash the affected area with copious amounts of water and seek medical advice.
f) Do not use any battery pack which is not designed for use with the equipment.
g) Keep battery pack out of the reach of children.
h) Always purchase the battery pack recommended by the device manufacturer for the equipment.
i) Keep battery pack clean and dry.
j) Wipe the battery pack terminals with a clean dry cloth if they become dirty.
k) Battery pack needs to be charged before use. Always use the correct charger and refer to the manufacturer's instructions or equipment manual for proper charging instructions.
l) Do not leave battery pack on prolonged charge when not in use.
m) After extended periods of storage, it may be necessary to charge and discharge the battery pack several times to obtain maximum performance.
n) Recharge only with the charger specified by Worx. Do not use any charger other than that specifically provided for use with the equipment.
o) Retain the original product literature for future reference.
p) Use only the battery pack in the application for which it was intended.
q) Remove the battery from the equipment when not in use.
r) Dispose of properly.
s) Do not mix cells of different manufacture, capacity, size or type within a device.
t) Keep the battery away from microwaves and high pressure.

SYMBOLS

	Read operator's manual
	Keep bystanders away.
	Batteries may enter water cycle if disposed improperly, which can be hazardous for ecosystem. Do not dispose of waste batteries as unsorted municipal waste.
	Do not burn
 Li-Ion	Li-Ion battery This product has been marked with a symbol relating to 'separate collection' for all battery packs and battery pack. It will then be recycled or dismantled in order to reduce the impact on the environment. Battery packs can be hazardous for the environment and for human health since they contain hazardous substances.
	Wear protective gloves.
	Remove battery from the socket before carrying out any adjustment, servicing or maintenance.
 STOP	Blade continues to rotate after the machine is switched off. Wait until all machine components have completely stopped before touching them



call2recycle

POSITEC Inc. has established a partnership with the RBRC Corporation to recycle any Positec batteries with the RBRC-call2recycle seal. For environmental protection, please do not discard batteries in the trash. After the batteries' life cycle is ended, then please call 1-800-822-8837 for a free service that will properly dispose of the battery.

2.COMPONENT LIST

1.	OPERATING BAIL
2.	START BUTTON
3.	HANDLE BAR
4.	UPPER HANDLE
5.	HANDLE LOCK KNOB
6.	LOWER HANDLE
7.	GRASS COLLECTION BAG
8.	HEIGHT ADJUSTMENT LEVER
9.	LOWER HANDLE LOCK COVER
10.	BATTERY PACK COVER
11.	SAFETY FLAP
12.	CABLE CLIP
13	MIDDLE HANDLE
14.	POWER CORD
15.	TINE LOCK KNOB
16	BLADE CYLINDER
17.	TINE CYLINDER

***Not all the accessories illustrated or described are included in standard delivery.**

3.TECHNICAL DATA

Type WG855 WG855.X*(855- designation of machinery, representative of battery operated dethatcher)*

	WG855	WG855.X**
Voltage	40V ⎓ Max.(2x20V Max.)***	
No load speed	3400/min	
Dethatching width	36 cm (14")	
Bag capacity	40 L (1.1 bushels)	
Heigt adjustment levers	4(Level +1,Level 0,Level -1,Level -2)	
Level Height	Level +1 / +6mm (+1/4")	Level 0 / -3mm (-1/8')'
	Level -1 / -6mm (-1/4')'	Level -2 / -9mm (-3/8")
Machine Weight(bare tool)	23.06 lbs (10.45 kg)	

**X puede ser seguido por uno o dos caracteres. Todos los modelos son iguales, excepto el número de modelo y la marca registrada. El sufijo en los modelos puede ser un número del "1" al "999" o la letra inglesa "A" a "Z" o "M1" a "M9" que significa un paquete diferente o el Varios accesorios embalados en el paquete.

*** Voltage measured without workload. Initial battery voltage reaches maximum of 20 volts. Nominal voltage is 18 volts.

SUGGESTED BATTERIES AND CHARGERS

Category	Type	Capacity
20V Battery	WA3012	4.0Ah
20V Charger	WA3884	4.0A

We recommend that you purchase your accessories from the same store that sold you the tool. Refer to the accessory packaging for further details. Store personnel can assist you and offer advice.

4.INTENDED USE

This product is intended for domestic lawn dethatching.

5.OPERATION INSTRUCTION

NOTE: Read instruction handbook before operation this machine.

ASSEMBLY & OPERATION

ACTION	FIGURE
ASSEMBLY	
Assembling the handles Choosing the appropriate height of the handles and assembling the handles. **NOTE:** The height of both sides should be the same.	See Fig. A1, A2, A3, A4, A5, A6, A7
Attaching the cable clips	See Fig. B
Assembling the grass collection bag	See Fig. C
Assembling the grass collection bag to the dethatcher NOTE: Depress the grass collection bag slightly to ensure that it is completely installed.	See Fig. D
Removing/emptying grass collection bag **WARNING!** Always check the safety flap close the discharge outlet before using. Never lift the safety flap when the machine is being used without fitted grass collection bag.	See Fig. E1,E2
Installing the tine cylinder or the blade cylinder.	See Fig. F1, F2, F3
Checking the battery charge condition **NOTE:** Fig. G1 only applies for the battery pack with battery indicator light.	See Fig. G1
Charging the battery pack **NOTE:** The batteries are shipped uncharged. Each battery must be fully charged before the first mow. Always fully charge the two batteries at same time. More details can be found in charger's manual.	See Fig.G2
Fitting the battery pack **NOTE:** This machine will only run when batteries are installed. It is recommended to use the same amp hour batteries and charge the two batteries at the same time. When you use two batteries with different amp hours, the machine will only run to the lower common denominator.	See Fig.H
OPERATION	
Starting and Stopping For starting, press both the Start Button and the Operating bail at the same time. And then release the Start Button For stopping, release the Operating bail.	See Fig.I
Adjusting the operating height **Pull the height adjustment lever to adjust the working height.** **WARNING!** Stop, release Operating Bail and wait until the motor stops before adjusting height. Always place in "level +1" when moving, transporting, or storing the dethatcher. The blades continue to rotate after the machine is switched off, a rotating blade can cause injury. Do not touch rotating blades.	See Fig. J
Storage	See Fig. ,K

DETHATCHING TIPS

Your new dethatcher is designed to remove withered grass and scarify the soil to allow the soil get more nutrients. It is suggested use tine cylinder to remove withered grass, and use blade cylinder to scarify the soil. Please review the following recommendations for optimum dethatching performance.

1) Avoid dethatching when the grass is wet from rain or dew. Wet grass may form clumps which interfere with the dethatching action and reduce the runtime.
2) For the best dethatching performance, it is suggested to use lawn mower to mow excess grass before using the dethatcher.
3) For the best performance, keep the dethatcher

housing free of built-up grass. From time to time turn off dethatcher and wait for the tine cylinder and blade cylinder to come to a complete stop. Then Remove the battery packs and turn dethatcher on its side. Using an object such as a stick, wipe out any accumulation of grass around the area of tine cylinder and blade cylinder. Be careful of the sharp edges of the tine cylinder and blade cylinder. Ensure to clean the area often when cutting wet or new grass and every time after the machine is used.

4) It is recommended to walk at normal pace, and not to start/stop the dethatcher too often during operation.
5) For best performance, please ensure use two fully charged battery packs at the same time.
6) Choose the tine cylinder or blade cylinder to operate the machine according to the different working conditions. Please wear protective gloves when replacing tine cylinder or blade cylinder.
7). You will first need to remove all debris from the yard, including any sprinkler heads and other obstacles. Then you will need to mow your lawn to half of the normal height of your typical cutting. The lower cut will allow the dethatcher to work more effectively.

6.MAINTENANCE

WARNING: Stop the dethatcher, remove the batteries before removing the grass collection bag.

WARNING: Remove battery pack from the machine before carrying out any servicing ,cleaning or maintenance.
Never use water or chemical cleaners to clean your power tool. Wipe clean with a dry cloth. Always store your power tool in a dry place. Keep the motor ventilation slots clean. Keep all working controls free of dust. If you see some sparks flashing in the ventilation slots, this is normal and will not damage your power tool.

Note: To ensure long and reliable service, perform the following maintenance procedures regularly. Check for obvious defects such as a loose, dislodged or damaged tine cylinder or blade cylinder, loose fittings, and worn or damaged components. Check that the covers and guards are all undamaged and are correctly attached to dethatcher. Carry out any necessary maintenance or repairs before operating dethatcher. If the dethatcher should happen to fail despite regular maintenance, please call our customer helpline for advice.

STORAGE (See Fig. K)
Turn the machine on its side and clean the area of tine cylinder and blade cylinder. If grass cuttings are compacted in the area, remove with a wooden or plastic implement.
Loosen the knobs and fold the Handle bar.
Store the machine in a dry place. Do not place other objects on top of the machine.

7.TROUBLESHOOTING

PROBLEM	SOLUTION
1. Dethatcher doesn't run when Operating Bail is activated.	A. Check to make sure battery packs have been installed. B. Release Operating Bail to turn dethatcher off. Remove batteries, turn dethatcher over and check that tine cylinder and blade cylinder are free to turn. If not free, return to an authorized servicer. Tine cylinder and blade cylinder should turn freely. C. Has battery been fully charged? Plug in charger and wait for green light to come on. For starting, press both the Start Button and the Operating bail at the same time. (See Fig. I)
2. Motor stops while operationg.	A. Release Operating Bail to turn dethatcher off. Remove batteries, turn dethatcher over and check that tine cylinder and blade cylinder are free to turn. If not free, return to an authorized servicer. Tine cylinder and blade cylinder should turn freely. B. Has battery been fully charged? Plug in charger and wait for green light to come on.
3. Dethatcher runs but not working properly or performance is unsatisfactory.	A. Has battery been fully charged? Plug in charger and wait for green light to come on." B. Release Operating Bail to turn scarifier/aerator off. Remove batteries. Turn scarifier/aerator over and check: -Tine cylinder and blade cylinder for sharpness - Replace tine cylinder or blade cylinder as needed if tine cylinder or blade cylinder is worn or damaged. -Deck and discharge chute for clogging. C. Operating height is not appropriate.Adjust the height.

4. Dethatcher is too hard to push.	A. Raise height to reduce deck drag on grass. Check each wheel for free rotation. B. Check whether grass is wrapped on tine cylinder or blade cylinder, if so, release Operating Bail to turn scarifier/aerator off and remove battery packs, then remove the grass. It is suggested to check whether grass is wrapped on tine cylinder or blade cylinder and remove excess grass before operation.
5. Dethatcher is abnormally noisy and vibrates.	A. Release Operating Bail to turn dethatcher off. Remove batteries. Turn dethatcher on side and check tine cylinder or blade cylinder to ensure it has not been bent or damaged. If tine cylinder or blade cylinder are damaged, replace with replacement tine cylinder or blade cylinder. If the underside of the deck is damaged return dethatcher to an Authorized service center.
6. Battery charger LED's not on.	A. Check plug connection. B. Replace charger.
7. Battery charger LED does not flip to green.	A. Battery needs to be diagnosed. Take to authorized service center.
8. Dethatcher not picking up grass clippings with the Grass Collection Bag.	A. Chute clogged. Release Operating Bail to turn dethatcher off. Remove batteries. Clear chute of grass clippings. B. Bag full. Empty bag more often.
9. Low or diminished run-time after many uses	A. Return to Authorized Service location - may need new battery.
10. The battery charger LED flashes red and the battery can't be charged.	A. The battery overheats after continuous use. Remove battery from the charger and allow it to cool to 42°C or less.

FOR BATTERY TOOLS

The ambient temperature range for the use and storage of tool and battery is 0°C-45°C.
The recommended ambient temperature range for the charging system during charging is 0°C-40°C.