NOTE:
Please read all instructions carefully before using this product

Table of Contents

Safety Notice

Important Assembly Information

Care and Maintenance

Parts List

Warranty

Ordering Parts

Model
MFT-942

Retain This Manual for Reference

241202

OWNER'S MANUAL

MARCY®

MFT-942

Multi-Functional Trainer

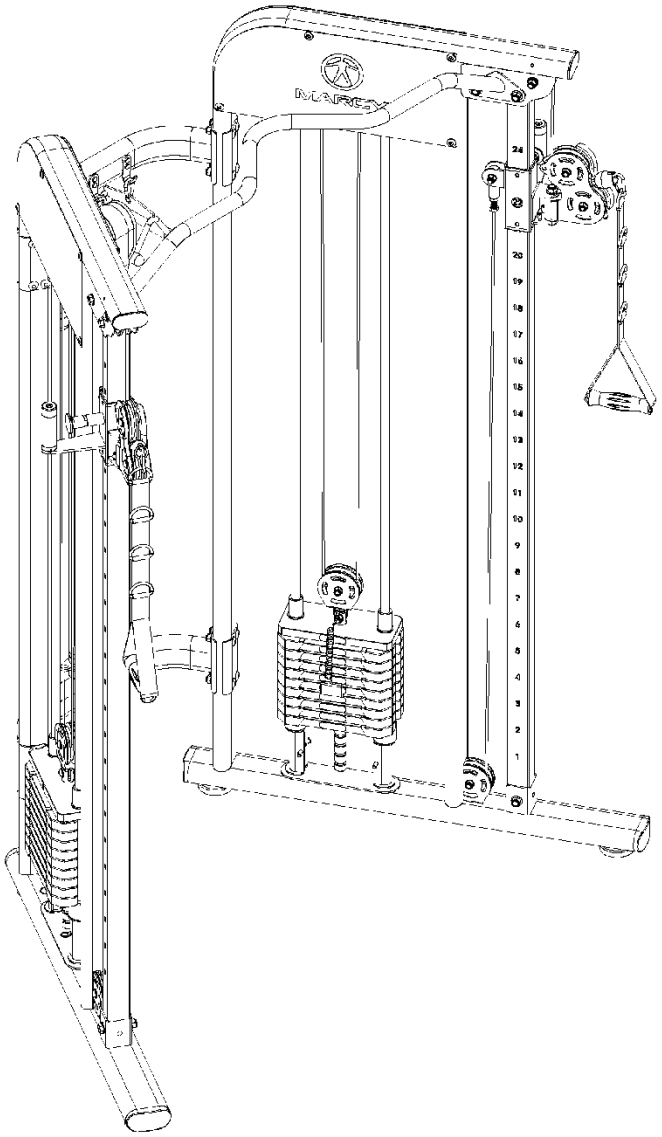

IMPORTANT: Please read this manual before commencing assembly of this product.

IMPEX® INC.
2801 S. Towne Ave, Pomona, CA 91766
Tel: (800) 999-8899
www.marcypro.com
support@impex-fitness.com

TABLE OF CONTENTS

BEFORE YOU BEGIN	1
IMPORTANT SAFETY NOTICES	2
EXERCISE GUIDELINES	3
WARNING LABEL PLACEMENT	5
IMPORTANT ASSEMBLY INFORMATION	6
CARE AND MAINTENANCE	7
PARTS LIST	9
EXPLODED DIAGRAM	11
WARRANTY	13
ORDERING PARTS	13

BEFORE YOU BEGIN

Thank you for selecting the MARCY Clubline MFT-942 Multi-Functional Trainer by IMPEX® INC. For your safety and benefit, read this manual carefully before using the equipment. As a manufacturer, we are committed to providing you complete customer satisfaction. If you have any questions, or find there are missing or damaged parts, we guarantee you complete satisfaction through direct assistance from our factory. To avoid unnecessary delays, *please call our TOLL-FREE customer service number*. Our Customer Service Agents will provide immediate assistance to you.

Toll-Free Customer Service Number
1-800-999-8899
Mon. – Fri. 9 a.m. – 5 p.m. PST
www.marcypro.com
support@impex-fitness.com

©IMPEX INC.

IMPORTANT SAFETY NOTICE

This exercise equipment is built for optimum safety. However, certain precautions apply whenever you operate a piece of exercise equipment. Be sure to read the entire manual before you assemble or operate your equipment. In particular, note the following safety precautions:

1. **Keep children and pets away from the equipment at all times. DO NOT leave children unattended in the same room with the equipment.**
2. Only one person at a time should use the equipment.
3. If the user experiences dizziness, nausea, chest pain, or any other abnormal symptoms STOP the workout at once. CONSULT A PHYSICIAN IMMEDIATELY.
4. Position the equipment on a clear, leveled surface. DO NOT use the equipment near water or outdoors.
5. Keep hands away from all moving parts.
6. Always wear appropriate workout clothing when exercising. DO NOT wear robes or other clothing that could become caught in the equipment. Running or aerobic shoes are also required when using the equipment.
7. Use the equipment only for its intended use as described in this manual. DO NOT use attachments not recommended by the manufacturer.
8. Do not place any sharp object around the equipment.
9. Disabled person should not use the equipment.
10. Before using the equipment to exercise, always do stretching exercises to properly warm up.
11. Never operate the equipment if the equipment is not functioning properly.
12. A spotter is recommended during exercise.
13. **This equipment is designed and intended for home and consumer use only, not for commercial use.**

⚠WARNING: BEFORE BEGINNING ANY EXERCISE PROGRAM, CONSULT YOUR PHYSICIAN. THIS IS ESPECIALLY IMPORTANT FOR INDIVIDUALS OVER THE AGE OF 35 OR PERSONS WITH PRE-EXISTING HEALTH PROBLEMS. READ ALL INSTRUCTIONS BEFORE USING ANY FITNESS EQUIPMENT. IMPEX INC. ASSUMES NO RESPONSIBILITY FOR PERSONAL INJURY OR PROPERTY DAMAGE SUSTAINED BY OR THROUGH THE USE OF THIS PRODUCT.

SAVE THESE INSTRUCTIONS.

©IMPEX INC.

EXERCISE GUIDELINES

Building Muscle and Gaining Weight

Unlike aerobic exercise, which emphasizes endurance training, anaerobic exercise focuses on strength training. A gradual weight gain can occur while building the size and strength of muscles. While developing muscle mass, your body adapts to the stress placed upon it. You can modify your diet to include foods such as meat, fish and vegetables. These foods help muscles recover and replenish important nutrients after a strenuous workout.

Muscle Strength and Endurance

To achieve the greatest benefit from exercise, it is important to develop an exercise program that allows you to work all of the major muscle groups equally.

To increase muscles strength; follow this principle:
Increasing resistance and maintaining the number of repetitions of an exercise results in increased muscle strength.

To tone your body, follow the principle: Decreasing resistance plus increasing the number of repetitions of an exercise results in increased body tone.

Once you feel comfortable with an exercise, you can change the resistance, the number of repetitions, or the speed at which you do the exercise. It is not necessary to change all three variables. For example, let's say that you are training at 50 lb / 22.5 kg and performing the exercise 10 times in 3 minutes. When this becomes too easy, you may decide to move up lifting 60 lb / 27 kg for the same number of repetitions in the same amount of time. Lifting more weights fewer times most often develops muscle strength. To gain both muscle strength and endurance, it is recommended that you perform each exercise 15 to 20 reps per set.

Training Intensity

How hard you begin to train depends on your overall level of fitness. The soreness you experienced can be lessened by decreasing the load you place on your muscles and by performing fewer sets. To avoid injury, you should gradually work into an exercise program and set the load to your individual fitness level. The load should increase as your fitness level increases.

Muscle soreness is common, especially when you first start exercising. If you are painfully sore for a long time, it may be time to change your program. Eventually, your muscle system will become accustomed to the stress and strain placed on it.

©IMPEX INC.

Beginning a Strength Building Program

Warming Up

To begin strength training, it is important to stretch and perform light exercise for 5 to 10 minutes. This helps prepare the body for more strenuous exercise by increasing circulation, raising your body temperature and developing more oxygen to your muscles.

Workout

Each workout to keep in mind that muscle soreness that lasts for a long period in not desirable and may mean that injury has occurred.

Cool Down

At the end of each workout, perform slow stretching exercises for 5 to 10 minutes. Ease into each stretch only going as far as you can. This stage allows your muscles wind down after training.

To provide a total workout program it is also recommended that 2 to 3 days of aerobic exercise is performed in addition to the strength training.

Drinking Water

For the body to function properly, it must be properly hydrated. If you are exercising, you should increase your fluid intake. The reason for this is that the water you take in will leave your system through the sweating mechanism that cools your body during exercise. The water you lose through exercise must be replaced so that the muscles can recover properly.

Rest Day

Although you may not feel like doing it, taking a rest day at least once a week is important because it gives your body a chance to heal itself. Continuously working your muscle will result in over training which will not benefit in the long run.

©IMPEX INC.

⚠ WARNING LABEL PLACEMENT

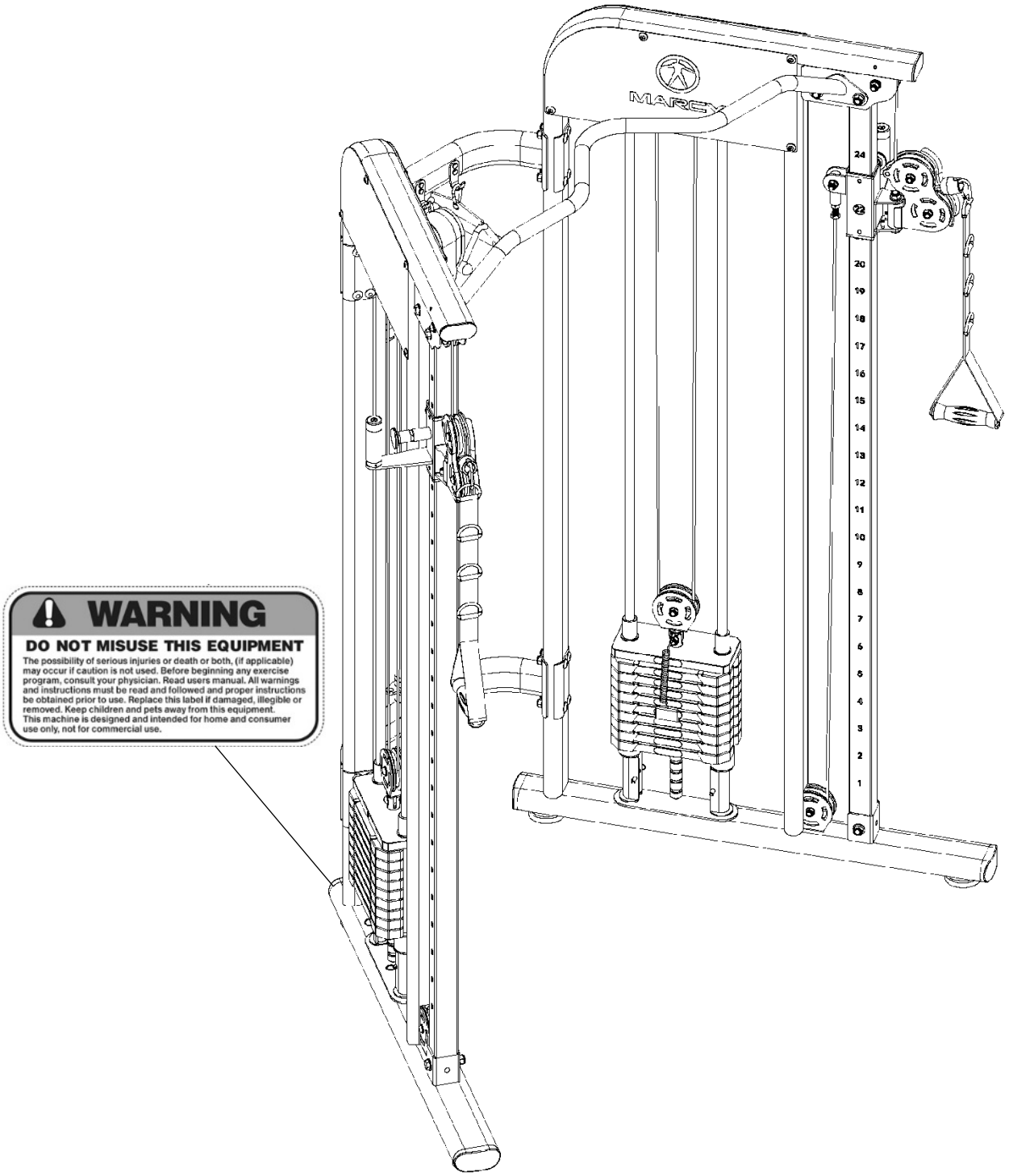

The warning labels shown here have been placed on the Rear Stabilizer and Upper Frame. If the labels are missing or illegible, please call customer service at 1-800-999-8899 for replacements. Apply the labels in the location shown.

©IMPEX INC.

FREE AND TRAINING AREA

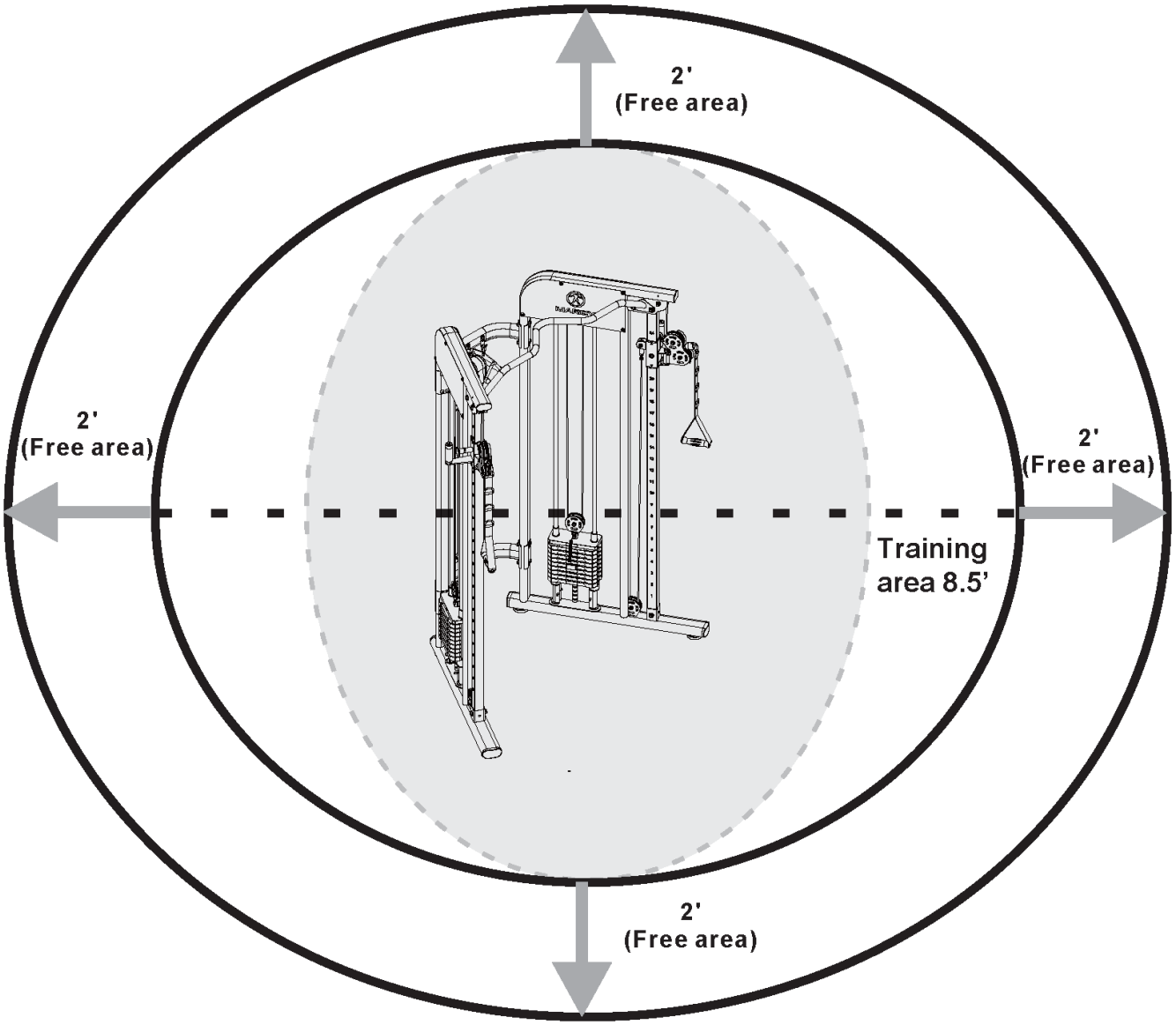

IMPORTANT ASSEMBLY INFORMATION

- Tools Required for Assembling the Bench (Adjustable Wrench not included, Allen Wrench included): Two Adjustable Wrenches and Allen Wrenches.
- NOTE: It is strongly recommended that this equipment is assembled by two or more people to avoid possible injury.
- Ensure **Carriage Bolts** are inserted through the **SQUARE holes** on components that need to be assembled. Attach washer only to end of the Carriage Bolt.

©IMPEX INC.

- ❖ Use **Allen Bolts or Hex Bolts** inserted through the **ROUND hole** on components that need to be assembled.
- ❖ Always wait until all bolts are assembled onto the bench before tightening the bolts. Do not tighten each bolt right after it is installed

Fasten Nuts and Bolts

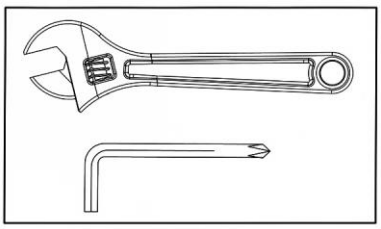

Securely tighten all Nuts and Bolts after all components have been assembled in current and previous steps.
NOTE: Do not over tighten any component with pivoting function.
Make sure all pivoting components are able to move freely.

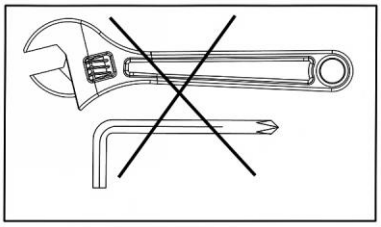

Do not tighten all Nuts and Bolts in this step.

CARE AND MAINTENANCE

1. Lubricate moving parts with WD-40 or light oil periodically.
2. Inspect and tighten all parts before using the equipment.
3. The equipment can be cleaned using a damp cloth and mild non-abrasive detergent. DO NOT use solvents.
4. Examine the equipment regularly for signs of damage or wear.
5. Replace any defective components immediately and/or keep the equipment out of use until repair.
6. **Failure to examine regularly may affect the safety level of the equipment.**

WEIGHT CAPACITY AND DIMENSION

1. Maximum user weight: 136 kg / 300 lb
2. Assembled Dimension: 63”x39”x83”

©IMPEX INC.

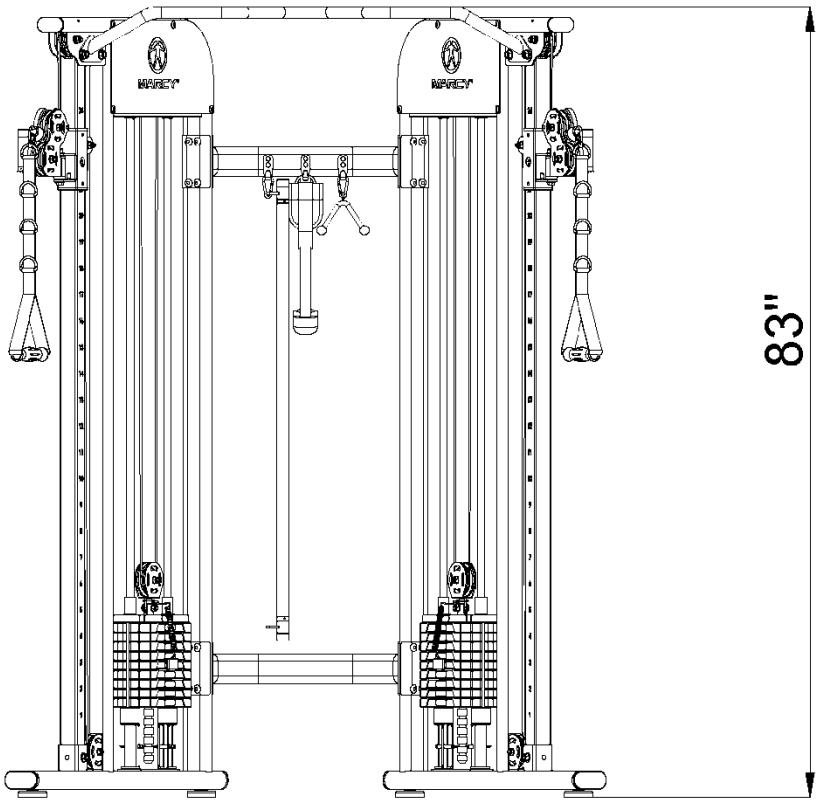

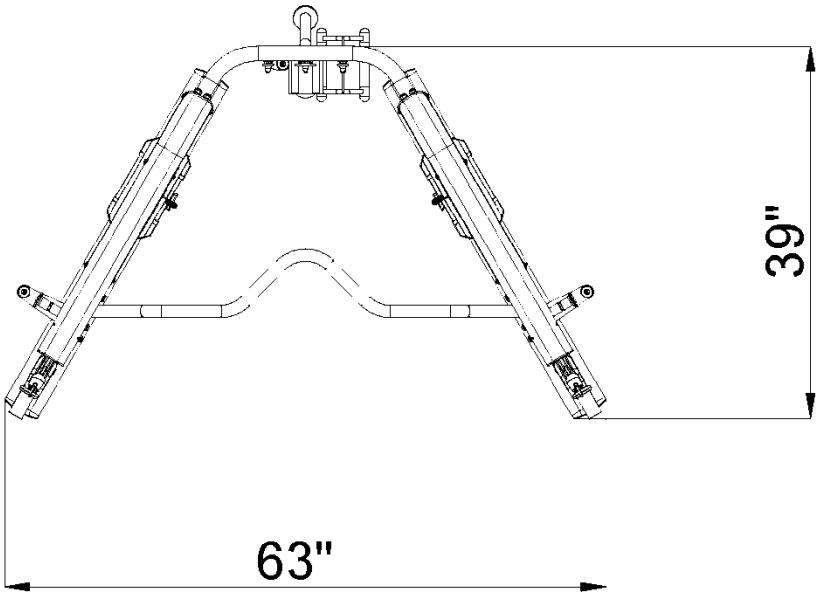

©IMPEX INC.

MFT-942 PARTS LIST

序号	英文名称	英文规格	数量
1	Cross Beam		1
2	Frame		2
3	Upper Connecting Frame		1
4	Left Cable Pulley Assembly		1
5	Right Cable Pulley Assembly		1
6	Chin up bar Frame		1
7	Accessory Hook		3
8	Pulley Bracket Handle		2
9	Trolley Guide Rod		4
10	Long Bar		1
11	Cable adjusting frame		2
12	Long Bar Swivel Ring		2
13	Long Bar End Cap		4
14	Front Vertical Beam		2
15	Logo board		4
16	U-shape Bracket		4
17	Double Pulley Assembly		2
18	Single Pulley Assembly		2
19	Plastic buckle		16
20	Upper Cable	L=303.3"	2
20-a	Ball stopper		2
20-b	Cable Buckle		2
20-c	Screw	M5×1 1/8"	2
21	Leveler		4
22	Selector Rod		2
23	Selector Stem		2
24	Weight Plate	10LBS	18
25	V Bar		1
26	Socket head cap bolt		2
27	Magnetic Weight Selector Pin		2

©IMPEX INC.

28	Guide Rod Stopper	Ø2"×Ø7/8"×13/4"	4
29	Weight Plate End Cap		36
30	End Cap		4
31	End Cap		2
32	End Cap		4
33	Bushing		4
34	Rubber Bumper		4
35	Guide Rubber Bumper	φ3/4"×φ11/4"	4
36	Allen Bolt	M6 × ⅜”	4
37	Pulley	Ø 3 1/2"	16
38	Cable Pulley Locking Pin		2
39	Allen Bolt	M10 × 3/4”	2
40	Weight Plate Sticker	10-150LBS	2
41	Long Bar Ring		4
42	Grip		2
43	Grip		1
44	Bearing	6001-2Z	4
45	Set Screw		8
46	Ankle Strap		1
47	Adjustable Single Handle		2
48	Chain		2
49	Carabiner		4
50	Triceps Rope		1
51	Hex Bolt	M12×3 1/2”	2
52	Hex Bolt	M12×3”	6
53	Allen Bolt	M10×3 1/8”	2
54	Allen Bolt	M10×2 1/2”	4
55	Allen Bolt	M10×2”	2
56	Allen Bolt	M10×1 3/4”	14
57	Allen Bolt	M10×1 1/2”	2
58	Carriage Bolt	M10×2 3/8”	16
59	Aircraft Nut	M12	8

©IMPEX INC.

60	Aircraft Nut	M10	36
61	Washer	Ø 3/4"	60
62	Washer	Ø 1"	18
63	Locking Washer	Ø 3/4"	4
64	Weight plate base frame		4
65	Locking Pin	φ8 ×2”	4
66	Selector Stem Bushing	φ1 3/8"×φ7/8"×2 5/8"	4

©IMPEX INC.

EXPLODED DIAGRAM

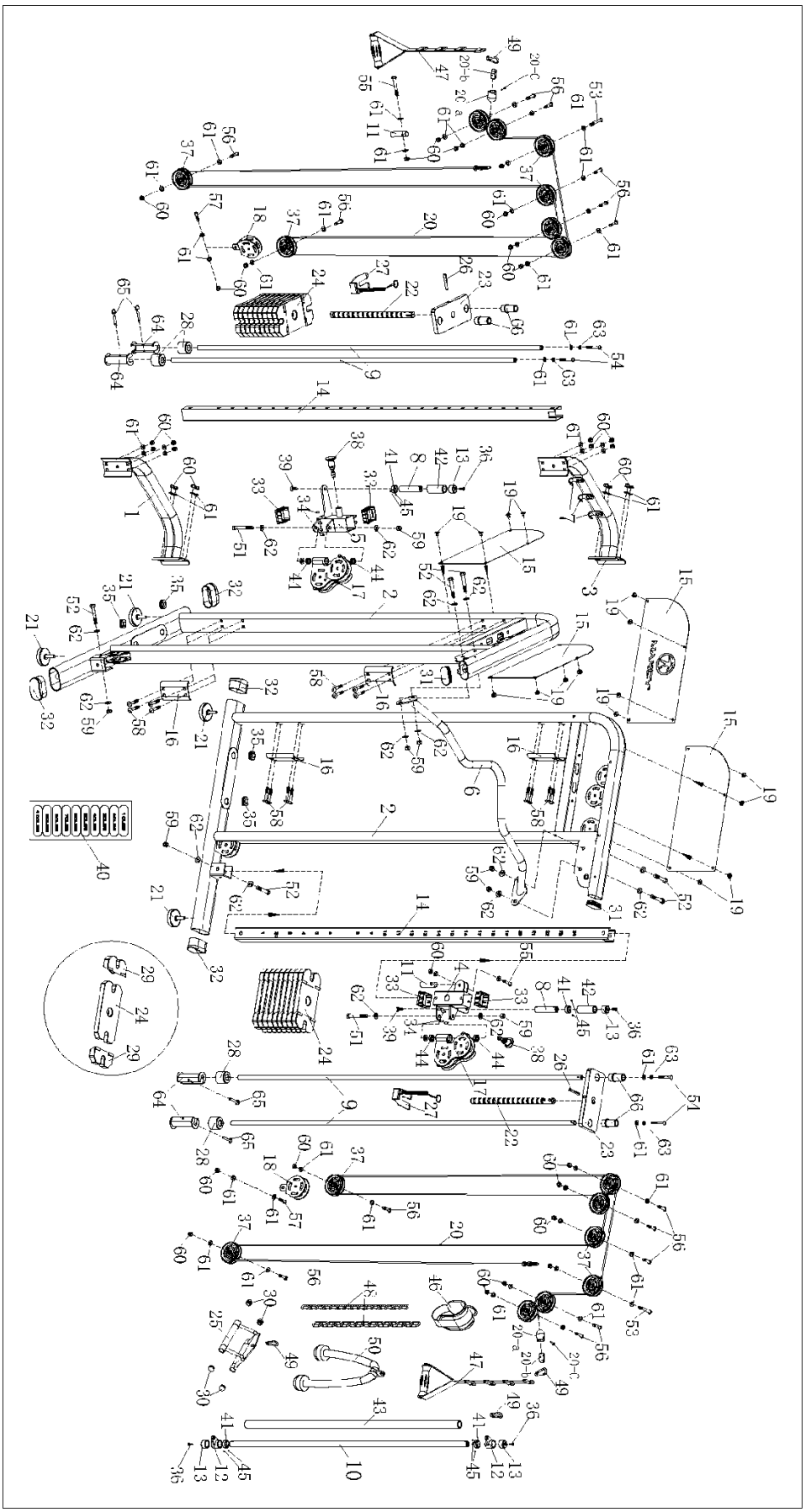

©IMPEX INC.

IMPEX® INC.

LIMITED WARRANTY

IMPEX Inc. ("IMPEX®") warrants this product to be free from defects in workmanship and material, under normal use and service conditions, for a period of two years on the Frame from the date of purchase. This warranty extends only to the original purchaser. IMPEX's obligation under this Warranty is limited to replacing or repairing, at IMPEX's option.

All returns must be pre-authorized by IMPEX. Pre-authorization may be obtained by calling IMPEX Customer Service Department at 1-800-999-8899. All freights on products returned to IMPEX must be prepaid by the customer. This warranty does not extend to any product or damage to a product caused by or attributable to freight damage, abuse, misuse, improper or abnormal usage or repairs not provided by an IMPEX authorized service center or for products used for commercial or rental purposes. No other warranty beyond that specifically set forth above is authorized by IMPEX.

IMPEX is not responsible or liable for indirect, special or consequential damages arising out of or in connection with the use or performance of the product or other damages with respect to any economic loss, loss of property, loss of revenues or profits, loss of enjoyments or use, costs of removal, installation or other consequential damages or whatsoever natures. Some states/provinces do not allow the exclusion or limitation of incidental or consequential damages. Accordingly, the above limitation may not apply to you.

The warranty extended hereunder is in lieu of any and all other warranties and any implied warranties of merchantability or fitness for a particular purpose is limited in its scope and duration to the terms set forth herein. Some states/provinces do not allow limitations on how long an implied warranty lasts. Accordingly, the above limitation may not apply to you.

This warranty gives you specific legal right. You may also have other rights which vary from states/provinces to states/provinces.

AUSTRALIA: Our goods come with guarantees that cannot be excluded under the Australian Consumer Law. You are entitled to a replacement or refund for a major failure and for compensation for any other reasonably foreseeable loss or damage. You are also entitled to have the goods repaired or replaced if the goods fail to be of acceptable quality and the failure does not amount to a major failure.

Register on-line at www.marcypro.com

IMPEX® INC.
2801 S. Towne Ave.
Pomona, CA 91766

ORDERING REPLACEMENT PARTS

Replacement parts can be ordered by calling our Customer Service Department toll-free at **1-800-999-8899** during our regular business hours: Monday through Friday, 9 am until 5 pm Pacific standard time.
support@impex-fitness.com

When ordering replacement parts, always give the following information.

1. Model
2. Description of Parts
3. Part Number
4. Date of Purchase

©IMPEX INC.