Form No. 3468-318 Rev A

Twin Bagger

Zero-Turn-Radius Riding Mower

Model No. 79501—Serial No. 400000000 and Up

Model No. 79601—Serial No. 400000000 and Up

Operator's Manual

Introduction

Read this information carefully to learn how to operate and maintain your product properly and to avoid injury and product damage. You are responsible for operating the product properly and safely.

Whenever you need service, genuine parts, or additional information, contact an Authorized Service Dealer or Customer Service and have the model and serial numbers of your product ready. Figure 1 identifies the location of the model and serial numbers on the product. Write the numbers in the space provided.

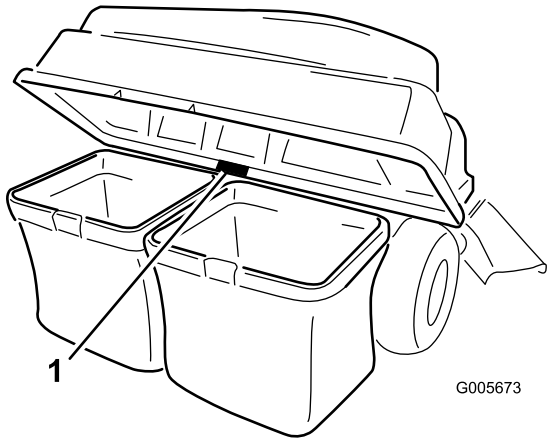

Figure 1

1. Model and serial number location

Model No. _____

Serial No. _____

This manual uses 2 words to highlight information. **Important** calls attention to special mechanical information and **Note** emphasizes general information worthy of special attention.

The safety-alert symbol (Figure 2) appears both in this manual and on the machine to identify important safety messages that you must follow to avoid accidents. This symbol will appear with the word **Danger**, **Warning**, or **Caution**.

- **Danger** indicates an imminently hazardous situation which, if not avoided, **will** result in death or serious injury.
- **Warning** indicates a potentially hazardous situation which, if not avoided, **could** result in death or serious injury.
- **Caution** indicates a potentially hazardous situation which, if not avoided, **may** result in minor or moderate injury.



Figure 2

1. Safety-alert symbol

© 2024—The Toro® Company
8111 Lyndale Avenue South
Bloomington, MN 55420

Register at www.Toro.com.

Original Instructions (EN)
Printed in the USA
All Rights Reserved

3468-318

⚠ WARNING

CALIFORNIA
Proposition 65 Warning

Use of this product may cause exposure to chemicals known to the State of California to cause cancer, birth defects, or other reproductive harm.

Contents

Introduction 1
Safety 2
- Towing Safety 3
- Safety and Instructional Decals 4

Setup 5
- 1 Preparing the Machine 6
- 2 Installing the Weights 6
- 3 Installing the Attachment Mount 7
- 4 Installing the Latch Rod 9
- 5 Assembling the Bagger Top 10
- 6 Installing the Bagger Top 10
- 7 Installing the Baffles 12
- 8 Installing the Chute 14
- 9 Connecting with the Discharge Tube 15

Operation 16
- Emptying the Grass Bags 17
- Clearing Obstructions from the Bagger 18
- Removing the Bagger 18
- Using the Draw Bar 18
- Operating Tips 19

Maintenance 20
- Recommended Maintenance Schedule(s) 20
- Inspecting the Bagger Attachment 20
- Inspecting the Mower Blades 21
- Cleaning the Bagger Attachment 21

Storage 21
- Storing the Bagger Attachment 21

Safety

- Become familiar with the safe operation of the equipment, with the operator controls, and safety signs.
- Use extra care with grass catchers or other attachments. These can change the operating characteristics and the stability of the machine.
- Follow the manufacturer's recommendations for adding or removing wheel weights or counterweights to improve stability.
- Do not use a grass catcher on steep slopes. A heavy grass catcher could cause loss of control or overturn the machine.
- Slow down and use extra care on hillsides. Be sure to travel in the recommended direction on hillsides. Turf conditions can affect the stability of the machine. Use extreme caution while operating near drop-offs.
- Keep all movement on slopes slow and gradual. Do not make sudden changes in speed, direction, or turning.
- The grass catcher can obstruct the view to the rear. Use extra care when operating in reverse.
- Use care when loading or unloading the machine into a trailer or truck.
- Never operate with the discharge deflector raised, removed or altered, unless using a grass catcher.
- Keep hands and feet away from moving parts. Do not make adjustments with the engine running.
- Park the machine on level ground, disengage the drives, and shut off the engine before leaving the operator's position for any reason including emptying the grass catcher or unclogging the chute.
- If you remove the grass catcher, be sure to install any discharge deflector or guard that might have been removed to install the grass catcher. Do not operate the mower without either the entire grass catcher or the grass deflector in place.
- Do not leave grass in the grass catcher for extended periods of time.
- Grass catcher components are subject to wear, damage and deterioration, which could expose you to moving parts or allow objects to be thrown. Frequently check components and replace with the manufacturer's recommended parts, when necessary.

Towing Safety

- Do not attach towed equipment except at the hitch point.
- Follow the attachment manufacturer's recommendation for weight limits for towed equipment and towing on slopes.
- Never allow children or others in or on towed equipment.
- On slopes, the weight of the towed equipment may cause loss of traction and loss of control. Reduce towed weight and slow down.
- Stopping distance increases with the weight of the towed load. Travel slowly and allow extra distance to stop.
- Make wide turns to keep the attachment clear of the machine.
- Do not tow a load that weighs more than the towing machine.

Safety and Instructional Decals

Safety decals and instructions are easily visible to the operator and are located near any area of potential danger. Replace any decal that is damaged or missing.

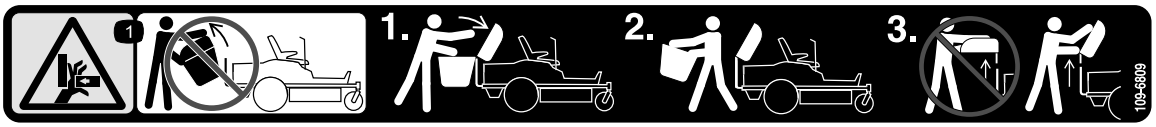

decal109-6809

109-6809

1. Crushing hazard of hand—do not remove the whole bagger from the machine; open the bagger top and then remove the bag(s) from the bagger. Do not remove the bagger top when it is closed; open the bagger top and then remove it.

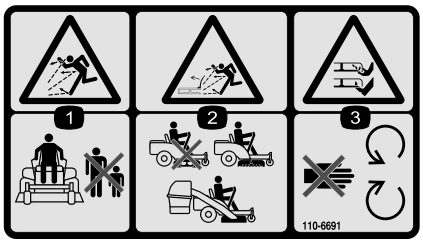

decal110-6691

110-6691

1. Thrown object hazard—keep bystanders away.
2. Thrown object hazard, mower—do not operate without the deflector, discharge cover, or grass collection system in place.
3. Cutting/dismemberment hazard of hand or foot—stay away from moving parts.



decal133-8061

133-8061

Setup

Loose Parts

Use the chart below to verify that all parts have been shipped.

Procedure	Description	Qty.	Use
1	No parts required	–	Prepare the machine.
2	Left weight-mounting bracket Right weight-mounting bracket Thread-forming screw (5/16 x 3/4 inch) Hex-head flange bolt (3/8 x 1 inch) Locknut (3/8 inch) Washer Bolt (3/8 x 2-3/4 inches) Suitcase weight	1 1 2 6 6 2 2 6	Install the weights.
3	Stabilizer bracket Bagger frame Bolt (5/16 x 1 inch) Locknut (5/16 inch) Pivot frame Long clevis pin Hairpin Clevis pin Rod Washer	1 1 6 6 1 1 3 2 2 2	Install the attachment mount.
4	Latch rod Hairpin cotter	1 1	Install the latch rod.
5	Bagger top Bagger screen	1 1	Assemble the bagger top.
6	Upper bagger tube Bag frame Bag assembly Rivet	1 2 2 8	Install the bagger top.
7	Baffle (50 or 54 inch decks only) Bagging cutoff baffle (60 inch decks only) Front baffle (60 inch decks only) Carriage bolt Pushnut Locknut	1 1 1 2 1 1	Install the baffles.
8	Chute Hand knob (60 inch decks only)	1 1	Install the chute
9	No parts required	–	Connect with the discharge tube.

Note: Determine the left and right sides of the machine from the normal operating position.

1

Preparing the Machine

No Parts Required

Procedure

1. Park the machine on a level surface.
2. Disengage the blade-control switch.
3. Move the motion-control levers outward to the NEUTRAL-LOCK position to engage the parking brake.
4. Shut off the machine and remove the key.
5. Wait for all moving parts to stop.
6. Allow machine components to cool.

2

Installing the Weights

Parts needed for this procedure:

1	Left weight-mounting bracket
1	Right weight-mounting bracket
2	Thread-forming screw (5/16 x 3/4 inch)
6	Hex-head flange bolt (3/8 x 1 inch)
6	Locknut (3/8 inch)
2	Washer
2	Bolt (3/8 x 2-3/4 inches)
6	Suitcase weight

Procedure

Note: Retain all removed parts for later installation.

⚠ CAUTION

The bagger changes the weight distribution of the machine. Operating the machine without the front weights may cause an unstable condition, which could result in a loss of control.

Ensure the front weights are properly installed before operating the machine with the bagger attachment.

1. Install the left and right weight-mounting brackets to the under side of the frame using 3 bolts (3/8 x 1 inch) and 3 locknuts (3/8 inch) per side as shown in Figure 3.
2. Install the suitcase weights (amount determined by deck size) to the weight mounting brackets using 2 bolts (3/8 x 2-3/4 inches), 2 washers, and 2 locknuts (3/8 inch) as shown in Figure 4.

Deck Size	Weights Required
60 inch	3
54 inch	4
50 inch	4

3. Once you have installed the weights and brackets, ensure that all the fasteners are tight. Tighten as necessary.

   Important: **Whenever you remove the bagger attachment, remember to remove the front weights to return the proper stability to the machine.**

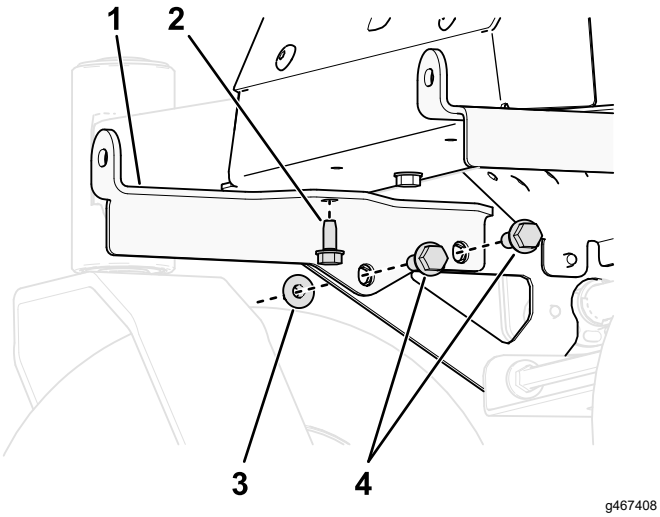

Figure 3

Some parts not shown for clarity.

1. Mounting bracket
2. Thread-forming screw (5/16 x 3/4 inch)
3. Locknut (3/8 inch)
4. Bolt (3/8 x 1 inch)

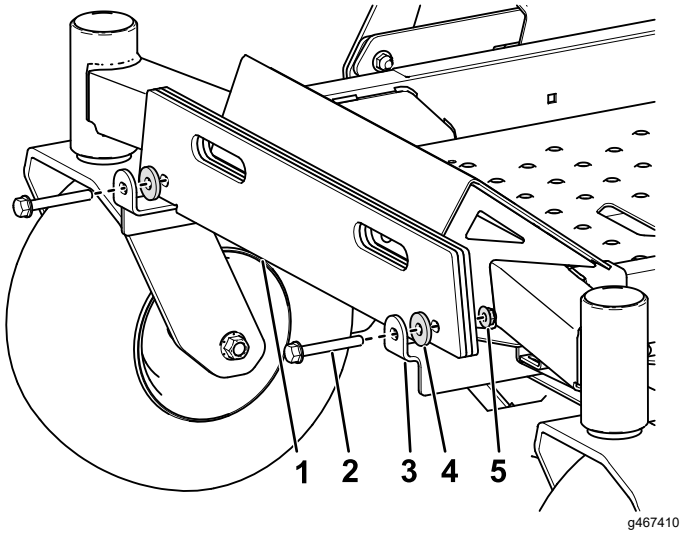

Figure 4

60 inch model with 3 weights shown

1. Suitcase weight
2. Bolts (3/8 x 2-3/4 inches)
3. Weight-mounting bracket
4. Washer
5. Locknuts (3/8 inch)

3

Installing the Attachment Mount

Parts needed for this procedure:

1	Stabilizer bracket
1	Bagger frame
6	Bolt (5/16 x 1 inch)
6	Locknut (5/16 inch)
1	Pivot frame
1	Long clevis pin
3	Hairpin
2	Clevis pin
2	Rod
2	Washer

Procedure

1. Install the stabilizer bracket to the guard using 2 bolts (5/16 x 1 inch) and 2 locknuts (5/16 inch) as shown in Figure 5.

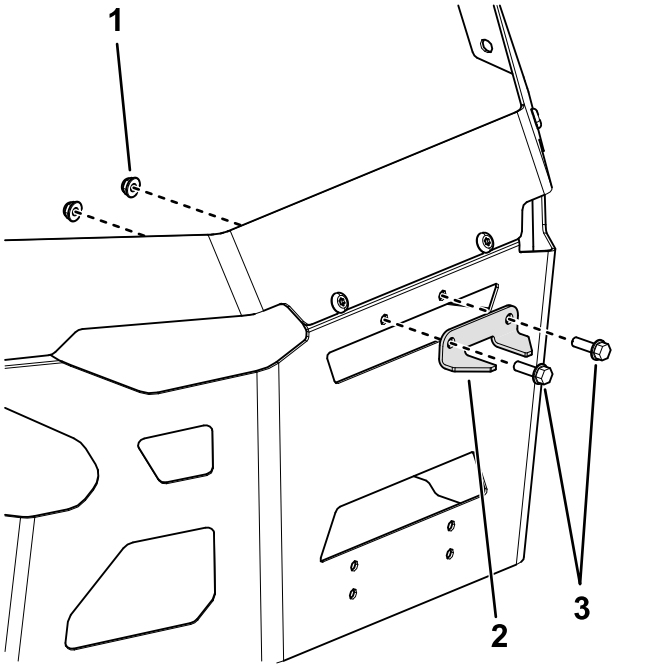

Figure 5

1. Locknut (5/16 inch)
2. Stabilizer bracket
3. Bolt (5/16 x 1 inch)

2. Remove the existing 2 bolts, 2 nuts, and hitch bracket from the bottom of the guard (Figure 6).

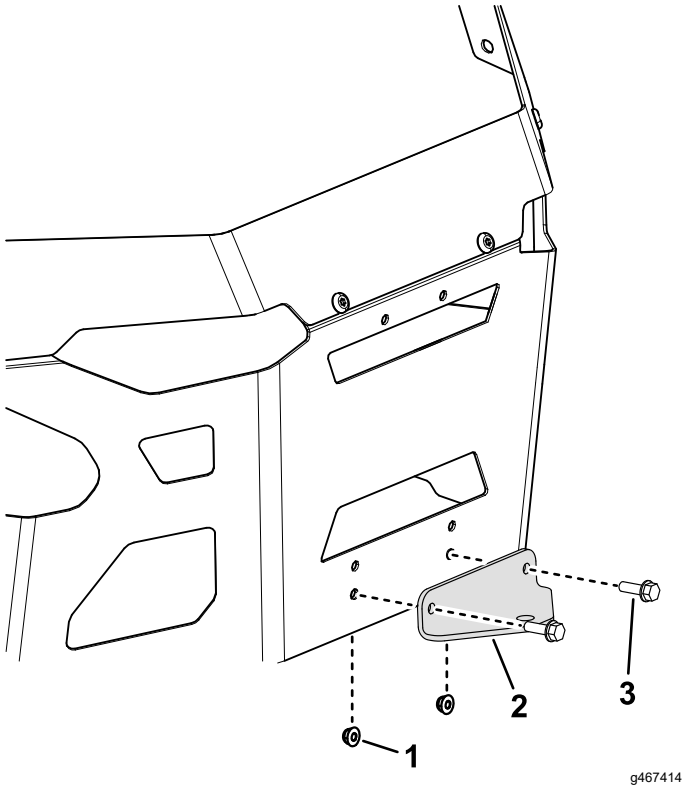

Figure 6

1. Nut
2. Existing hitch bracket
3. Bolt

3. Remove the machine muffler guard (0.06 inch) and replace it with the muffler guard (0.18 inch) included in the bagger kit.
4. Install the bagger mount bracket to the machine as shown in Figure 7.

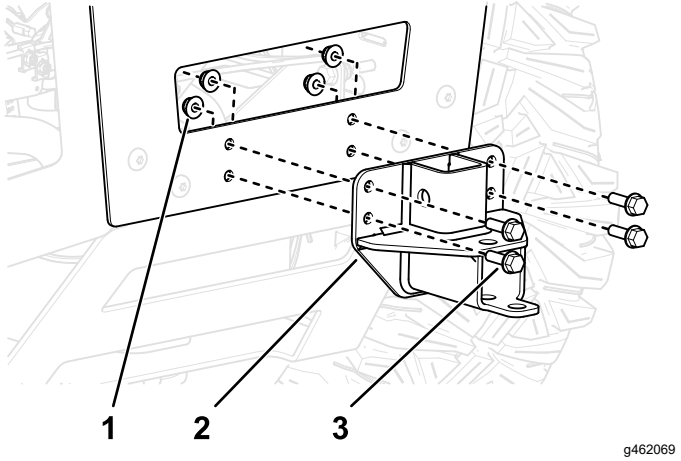

Figure 7

1. Locknut (5/16 inch)
2. Bagger mount bracket
3. Bolt (5/16 x 1 inch)

5. Install the bagger frame to the bagger mount bracket using the long clevis pin and a hairpin (Figure 8).

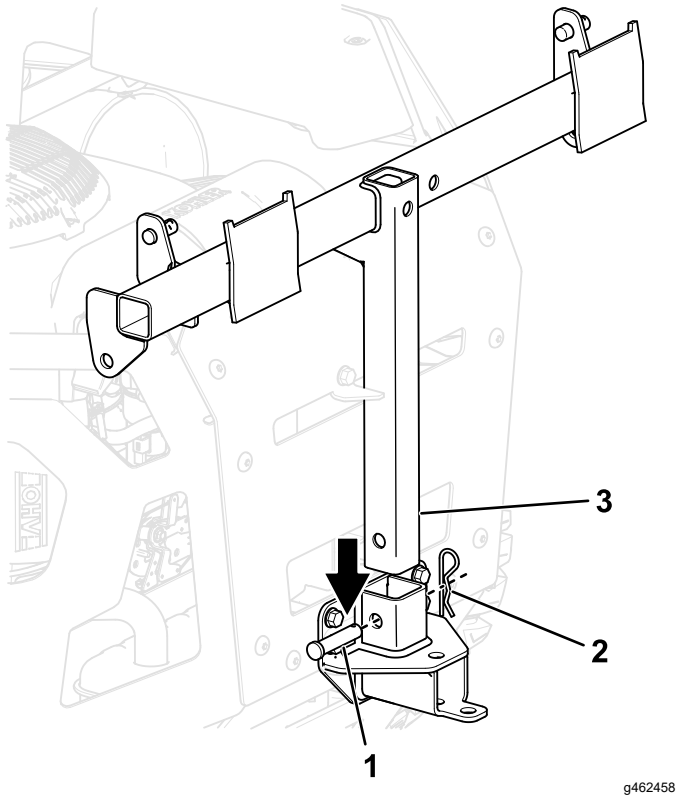

Figure 8

1. Clevis pin
2. Hairpin
3. Bagger frame

6. Install the bent, flared end of a rod into the keyed slot in the side of the machine frame, and move the rod rearward to seat it in the frame (Figure 9).

   Note: Repeat this step for both sides of the machine.

7. With the rod fully seated in the frame, adjust the position of the clevis at the end of the rod so that it aligns with the tab on the side of the bagger frame.

   Note: Ensure that the rod is taught and holds the bagger frame securely to the machine; adjust the clevis as necessary.

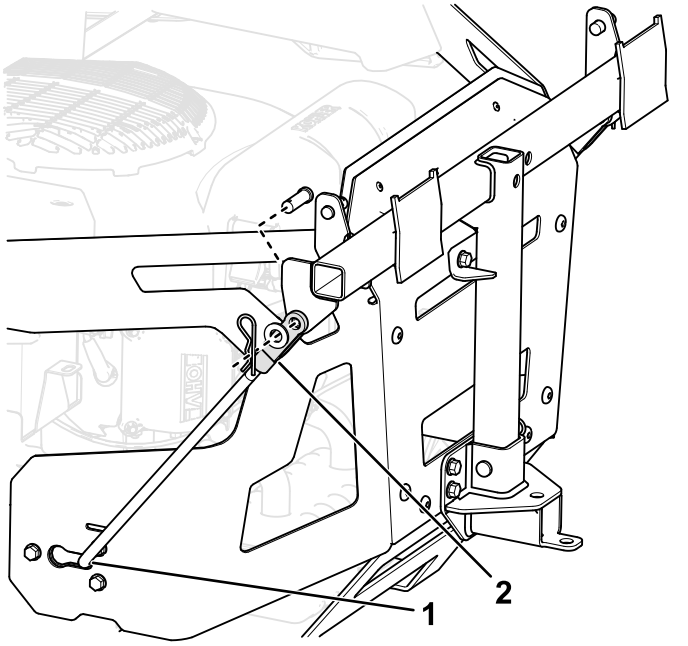

Figure 9
Left side shown

1. Rod fully seated in the frame
2. Clevis adjusted to the side of the bagger frame

8. Secure the ends of the rods to the bagger frame as shown in Figure 9 and secure the end of each rod with a clevis pin and a hairpin.

4

Installing the Latch Rod

Parts needed for this procedure:

1	Latch rod
1	Hairpin cotter

Procedure

Install the latch rod with a hairpin cotter (Figure 10).

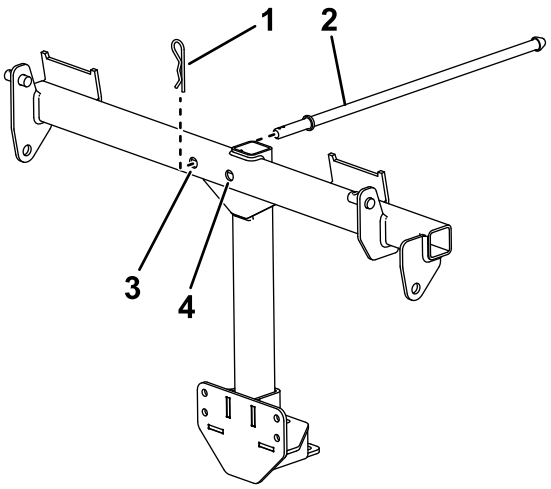

Figure 10

1. Hairpin cotter
2. Latch rod
3. Latch rod hole (60 inch decks)
4. Latch rod hole (50 and 54 inch decks)

5

Assembling the Bagger Top

Parts needed for this procedure:

1	Bagger top
1	Bagger screen

Procedure

1. Turn the bagger top over.
2. Install the screen as shown in Figure 11 and that it slopes down toward the collection bags.

   Note: Ensure that the screens snap into place and the tabs engage the bagger top.

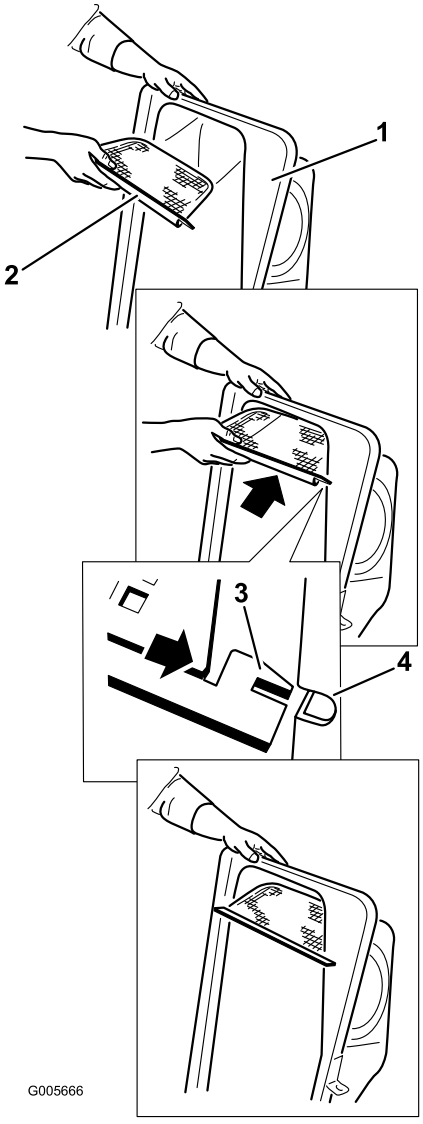

g005666

Figure 11

1. Bagger top
2. Screen
3. Screen tab
4. Slot in bagger top

6

Installing the Bagger Top

Parts needed for this procedure:

1	Upper bagger tube
2	Bag frame
2	Bag assembly
8	Rivet

Procedure

1. Slide the brackets over the posts and rotate the bagger top down to the operating position.

   Note: The bagger top is easier to install if 2 people work together.

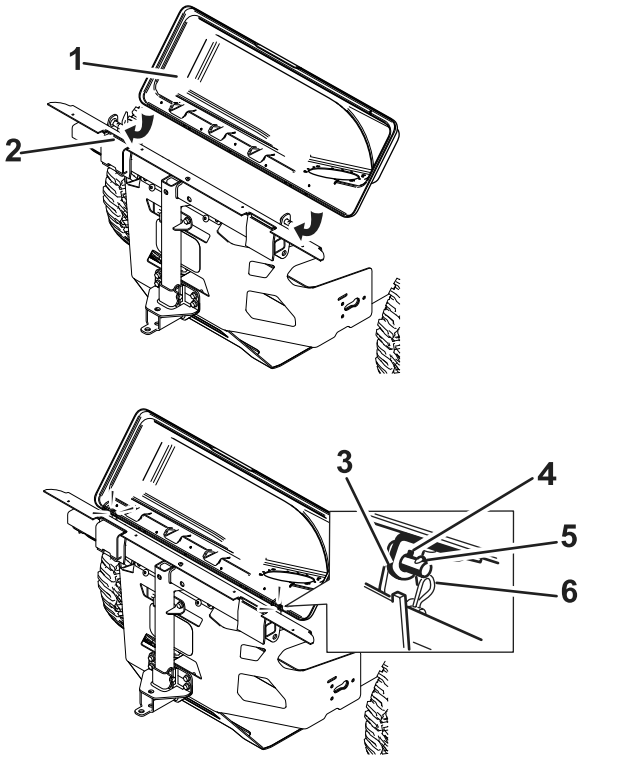

g492027

Figure 12

1. Bagger top
2. Bagger frame
3. Bracket, bagger top
4. Key hole
5. Post
6. Key

2. Install the 2 bag frames to the 2 bag assemblies.

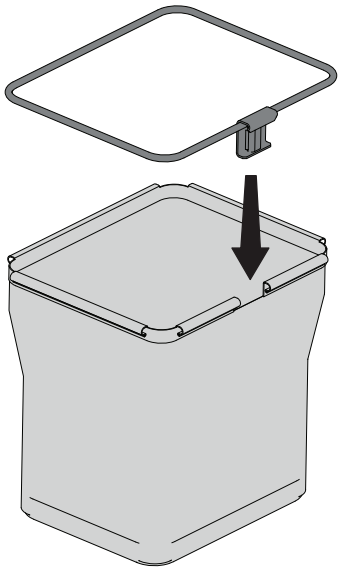

g453040

Figure 13

3. Lift the bagger top and install the bags by sliding the bag frame hooks onto the retaining brackets.

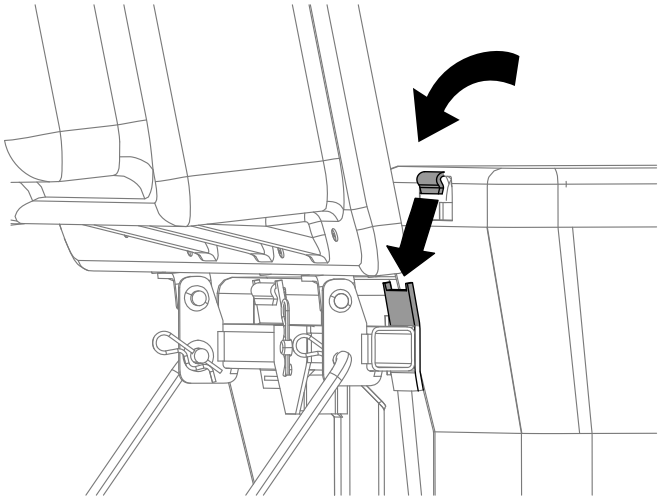

g300378

Figure 14

4. Lower the bagger top onto the bags.

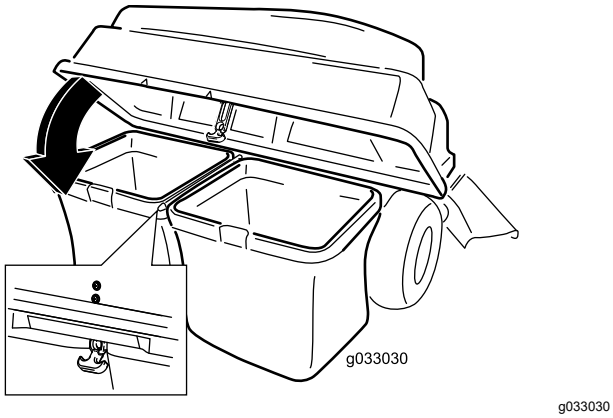

g033030

Figure 15

5. Attach the bagger hood strap to the latch rod.
6. Install the upper bagger tube by inserting the curved end into the opening in the bagger top.

   Note: Ensure that the flared end with the retention post is pointing down and froward in preparation to be mated with the Finishing Kit.

7

Installing the Baffles

Parts needed for this procedure:

1	Baffle (50 or 54 inch decks only)
1	Bagging cutoff baffle (60 inch decks only)
1	Front baffle (60 inch decks only)
2	Carriage bolt
1	Pushnut
1	Locknut

Machines with 50 or 54 inch Decks

Never operate the mower with the discharge opening uncovered. Always use a discharge cover, mulch cover, or bagging chute when operating the mower deck.

1. Remove the existing baffle from the machine.

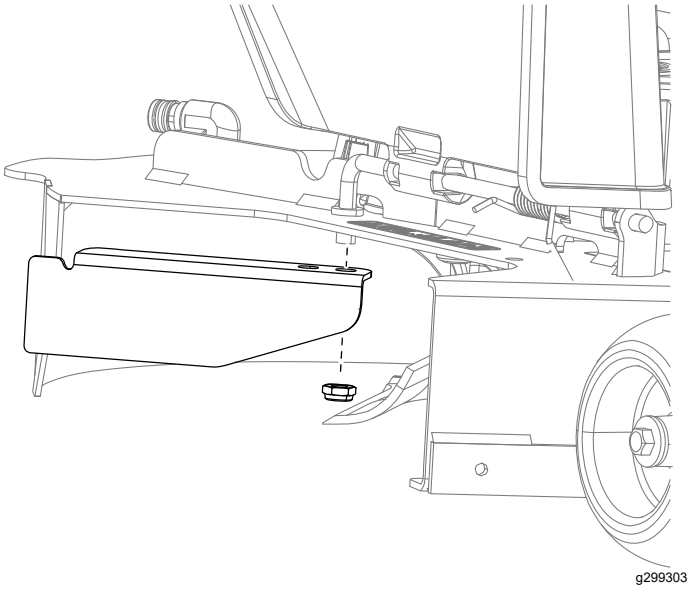

g299303

Figure 16

2. Install the new small baffle to the mower deck at the same location as the previously removed baffle.

   Note: Use the existing fasteners secure the new small baffle to the mower deck.

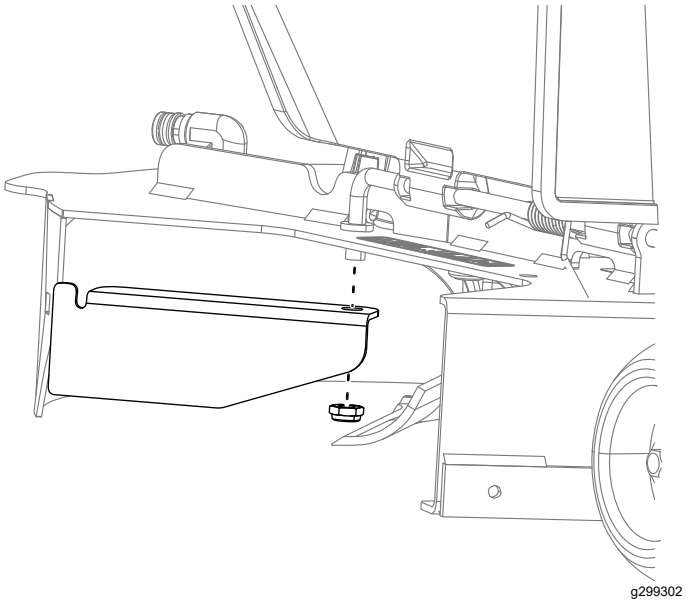

g299302

Figure 17

3. Rotate the bagging cutoff baffle to contact the rear edge of the deck.

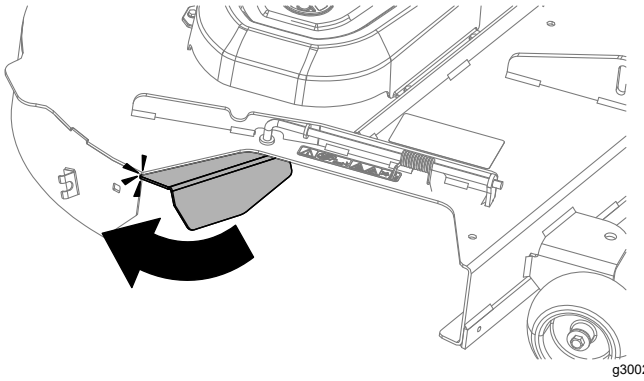

g300212

Figure 18

Machines with 60 inch Decks

Never operate the mower with the discharge opening uncovered. Always use a discharge cover, mulch cover, or bagging chute when operating the mower deck.

1. Remove the existing baffle from the machine.

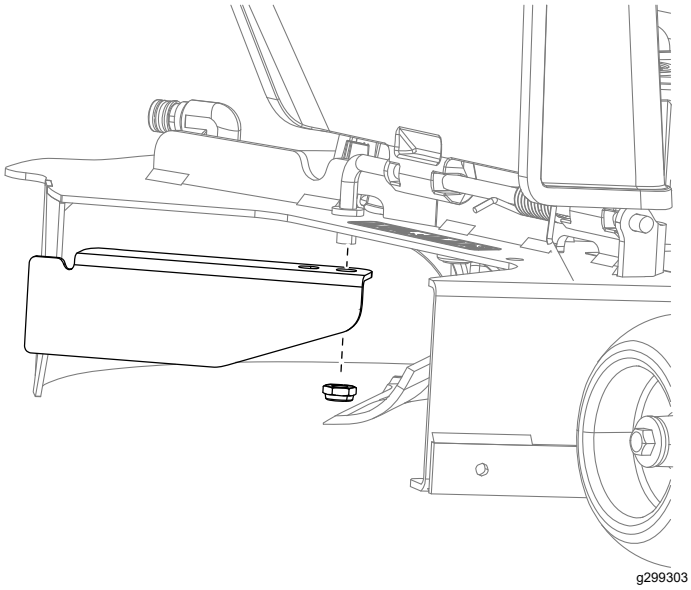

g299303

Figure 19

2. Install the new bagging cutoff baffle to the mower deck at the same location as the previously removed baffle.

   Note: Use the existing fasteners secure the new small baffle to the mower deck.

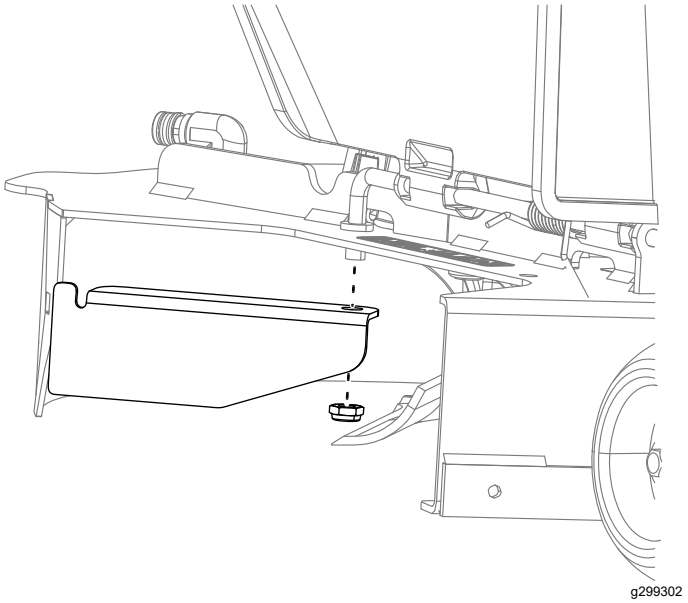

g299302

Figure 20

3. Rotate the bagging cutoff baffle to contact the rear edge of the deck.

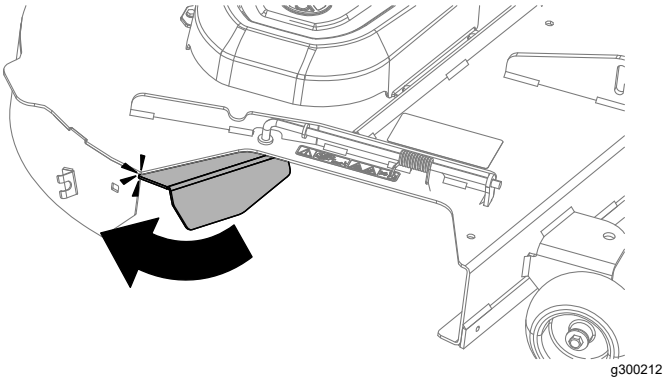

g300212

Figure 21

4. Install the carriage bolt and pushnut onto the front baffle.

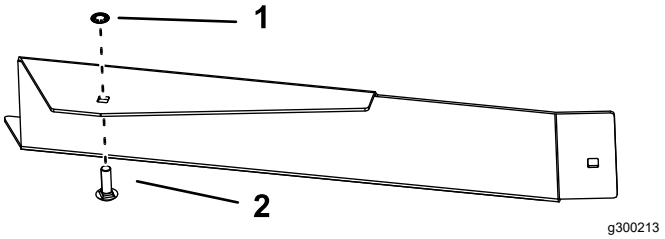

g300213

Figure 22

1. Push nut
2. Carriage bolt

5. Install the front baffle to the front of the mower deck using a locknut (5/16 inch) and a carriage bolt.

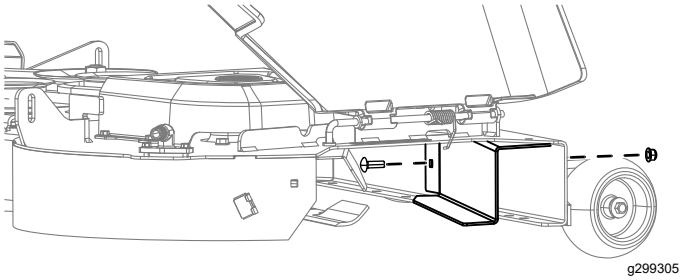

g299305

Figure 23

1. Carriage bolt
2. Nut

8

Installing the Chute

Parts needed for this procedure:

1	Chute
1	Hand knob (60 inch decks only)

Machines with 50 or 54 inch Decks

1. Tilt the chute and install the pin into the hole on the mower deck.

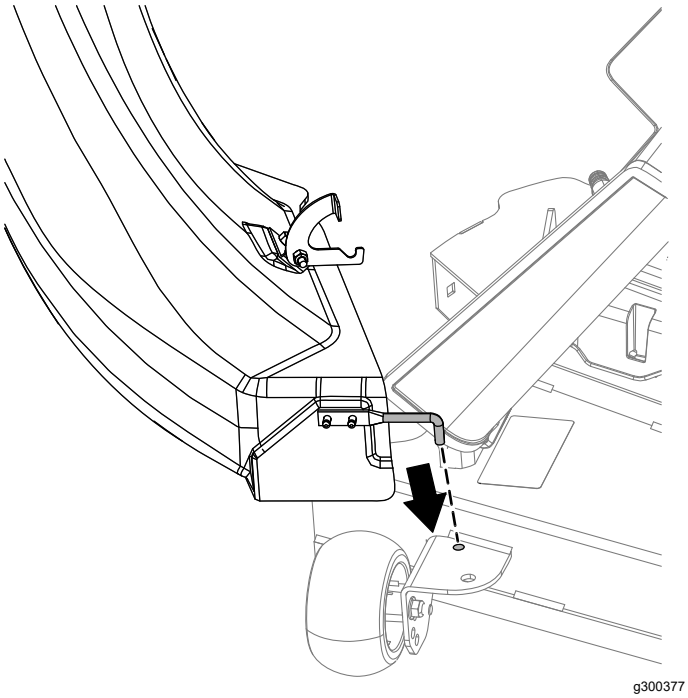

g300377

Figure 24

2. Pivot the chute back and toward the deck so the chute is flush with the mower deck.

Note: Ensure that the retaining hook on the chute is out of the way so the chute opening mounts flush to the deck.

3. On the top of the chute, engage the hook-shaped latch around the pivot rod of the deflector assembly and install the rod into the hole on the mower deck.

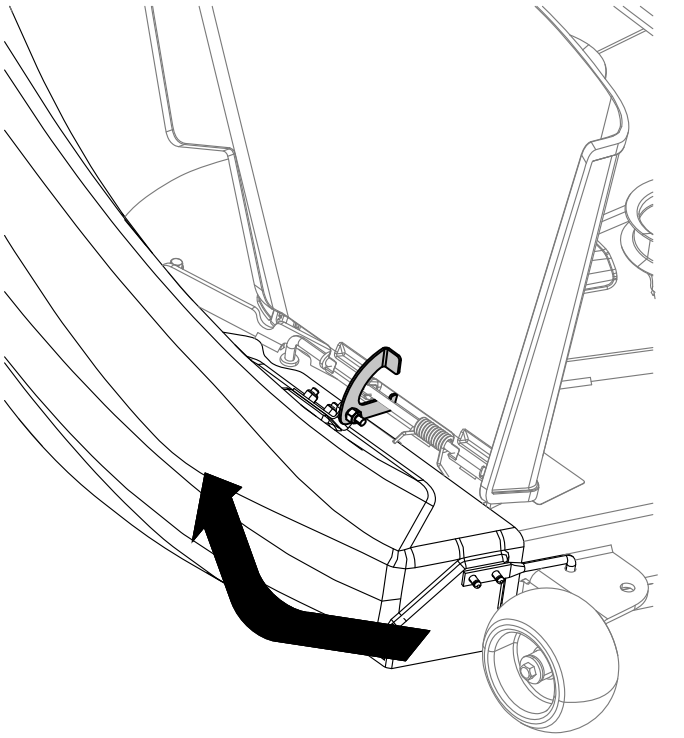

g300375

Figure 25

4. Hook the flexible latch on the chute to the retaining clasp welded on the mower deck.

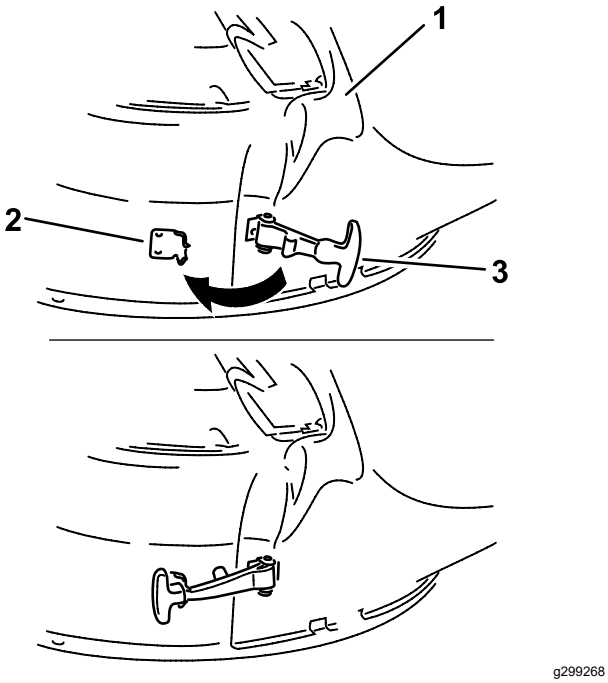

g299268

Figure 26

1. Chute
2. Retaining clasp
3. Flexible latch

Machines with 60 inch Decks

1. Install the chute to the mower deck with the hand knob.

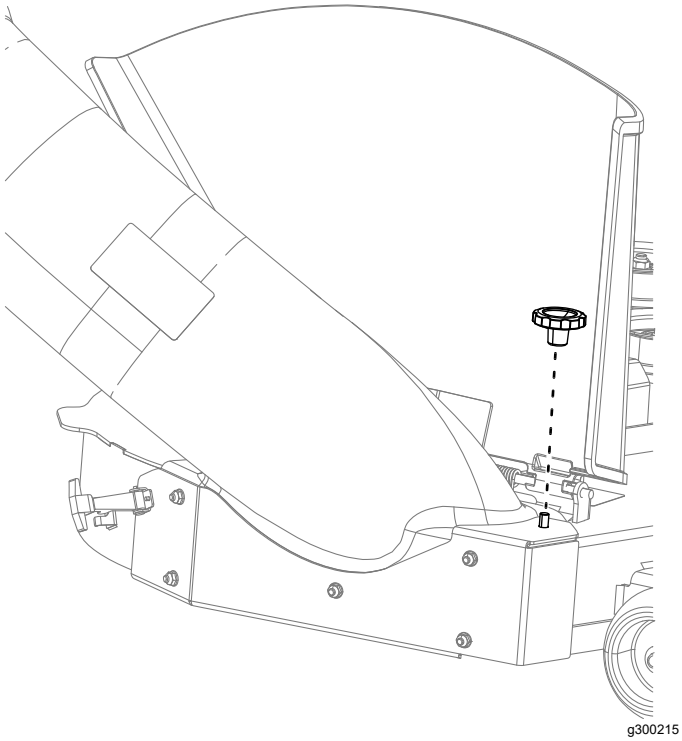

g300215

Figure 27

2. Hook the flexible latch on the chute to the retaining clasp welded to the side wall of the mower deck.

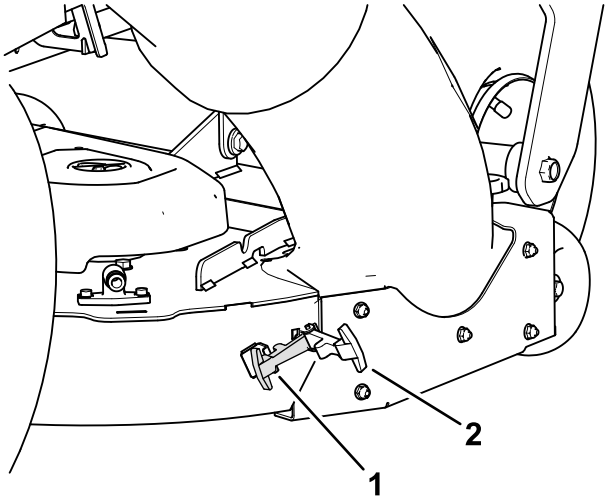

g466145

Figure 28

1. Retaining clasp
2. Flexible latch

9

Connecting with the Discharge Tube

No Parts Required

Procedure

1. Slide the curved end of the discharge tube into the opening in the bagger top (Figure 29).

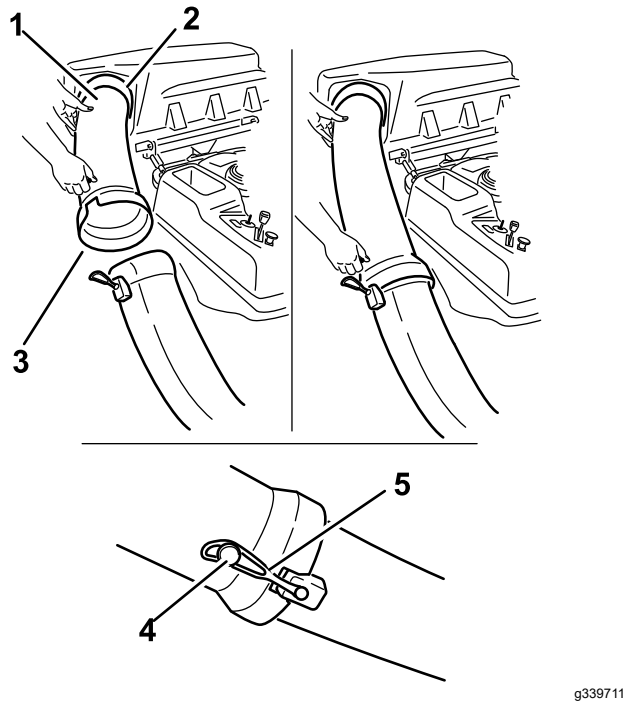

Figure 29

1. Discharge tube, curved end
2. Opening in bagger top
3. Discharge tube, flared end
4. Peg
5. Rubber strap

2. Slide the flared end of the discharge tube over the end of the chute. Move the rubber retaining strap on the chute snaps over the peg on the discharge tube to secure it (Figure 29).

Operation

Note: Determine the left and right sides of the machine from the normal operating position.

⚠ WARNING

To avoid personal injury, follow these procedures:

- **Become familiar with all operating and safety instructions in the *Operator's Manual* for the mower before using this attachment.**
- **Never remove the discharge tube, bags, bagger top, or the chute while the engine is running.**
- **Always shut the engine off and wait for all moving parts to stop before clearing an obstruction from the bagging system.**
- **Never do maintenance or repairs while the engine is running.**

⚠ WARNING

Without the grass deflector, bagger tubes or complete bagger assembly mounted in place, you and others are exposed to blade contact and thrown debris. Contact with the rotating mower blade(s) and thrown debris will cause injury or death.

- **Always install the grass deflector when removing the bagger and changing to side discharge mode.**
- **If the grass deflector is ever damaged, replace it immediately. The grass deflector routes material down toward the turf.**
- **Never put your hands or feet under the mower.**
- **Never try to clear the discharge area or mower blades unless you move the power take off (PTO) to off and rotate the ignition key to off. Also remove the key and pull the wire off of the spark plug(s).**
- **Turn off the engine before unclogging the discharge chute.**

Emptying the Grass Bags

⚠ DANGER

Debris, such as leaves, grass, or brush can catch fire. A fire in the engine area can cause personal injury and property damage.

- **Keep the engine and muffler area free of debris accumulation.**
- **Take care when opening the bagger cover to keep debris from falling onto the engine and muffler area.**
- **Allow the machine to cool before storing it.**

Be careful when lifting or handling a grass bag that is full. To empty the grass bags:

1. Park the machine on a level surface and disengage the blade control switch.
2. Move the motion control levers outward to the neutral lock position, shut off the engine, remove the key, set the parking brake and wait for all moving parts to stop before leaving the operating position.
3. Open (raise) the bagger top (Figure 30).

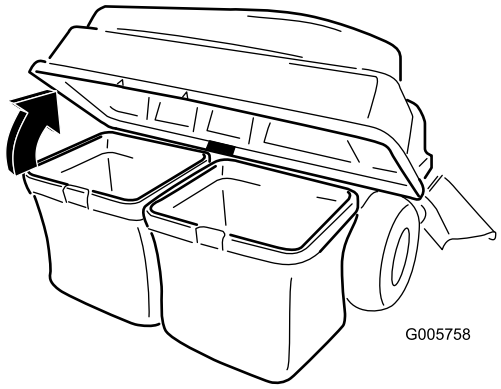

g005758

Figure 30

4. Compress debris into the bags. With both hands, lift up on the bag and unhook it from the retaining bracket. Empty the bag. Repeat the procedure for the other bag.

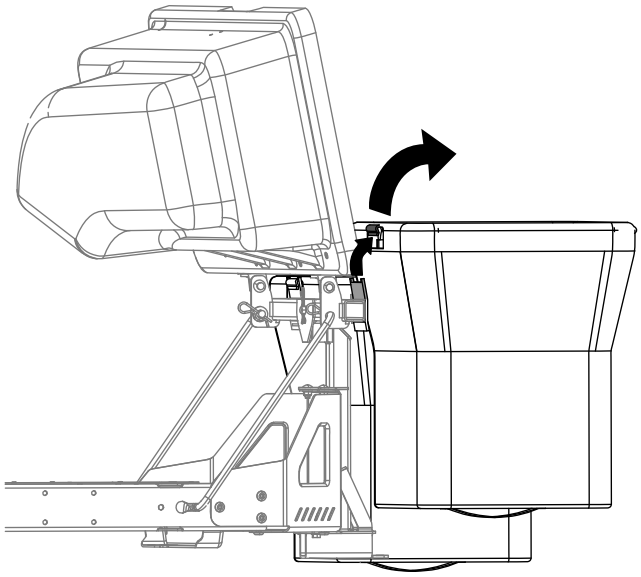

g300218

Figure 31

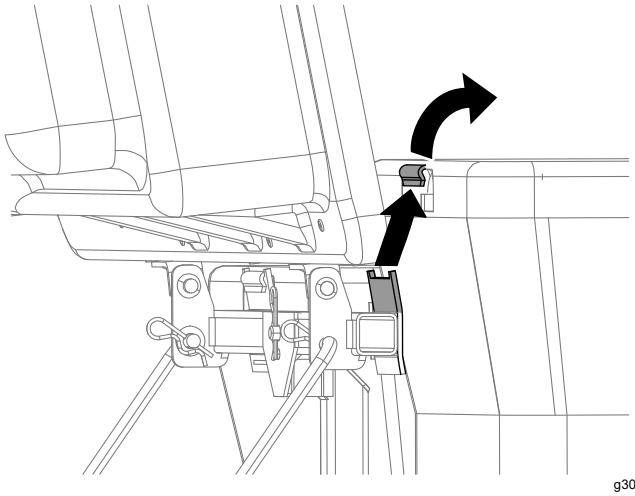

g300217

Figure 32

5. Install the bags by sliding the bag frame hooks onto the retaining brackets.
6. Lower the bagger top onto the bags.

Clearing Obstructions from the Bagger

⚠ WARNING

When the bagger is in operation, the blower is rotating and can cut off or injure hands and fingers.

- **Before adjusting, cleaning, repairing and inspecting the blower, and before unclogging the chute, shut off the engine and wait for all moving parts to stop. Remove the key.**
- **Use a stick or similar object, not your hands, to remove an obstruction from the blower and tube.**
- **Keep your face, hands, feet, and any other part of your body or clothing away from concealed, moving, or rotating parts.**

1. Park the machine on a level surface and disengage the blade control switch.
2. Move the motion control levers outward to the neutral lock position, stop the engine, remove the key, set the parking brake and wait for all moving parts to stop before leaving the operating position.
3. Check the grass bags and empty them if they are full.
4. Remove and separate the discharge tube and chute from the bagger top and mower. Using a stick or similar object, carefully remove and clear the obstruction from the mower, discharge tube, chute, and the bagger top.
5. After you remove the obstruction, install the complete bagger system and resume operation.

Removing the Bagger

⚠ CAUTION

Failing to remove the front bagger weights and operating the machine without the bagger attachment may cause an unstable condition which could result in a loss of control.

- **Always remove the front weights when removing the bagger attachment.**
- **Never operate the machine without the bagger attachment and the front weights still installed.**

The bagger can be removed by repeating the Setup sections from all installed bagger related kits in reverse order. If weights are installed, always remove the front bagger weights when removing the bagger attachments.

Note: When switching back to side discharge mode, remove the bagging baffle and install the original cutoff baffle and side-discharge chute that came with the machine.

Using the Draw Bar

The bagger support bracket has a draw bar feature that can be used for towing.

- Read and understand all the operating instructions of the machine.
- When turning, slow down and observe the clearance.
- Make wide turns and keep towed equipment clear of the towing vehicle.
- Excessive draw bar pull may cause hydrostatic transmission failure.

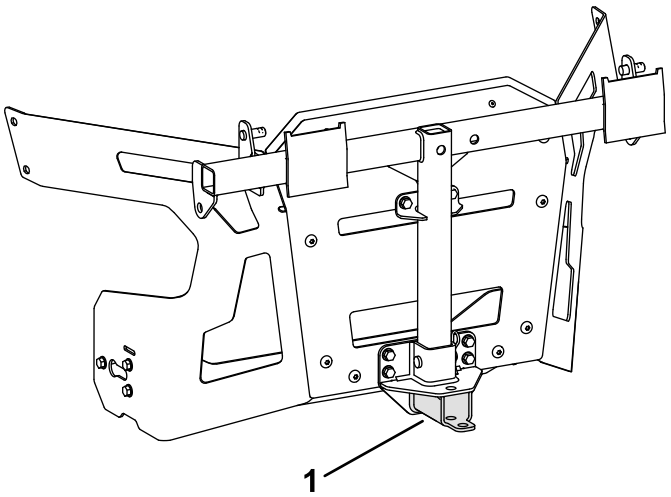

Figure 33

1. Bagger-support bracket with draw bar

Operating Tips

Tips for Bagging

Remembering the Size

Remember that the machine is longer and wider with this attachment installed. By turning too sharply in confined places you may damage the attachment.

Trimming

Always trim with the left side of the mower. Do not trim with the right side of the mower because you could damage the bagger chute and discharge tube.

Cutting Height

Do not set the mower cutting height too low because long grass surrounding the mower can prevent air from getting under the mower and entering the bagging system. If enough air does not get under the mower, the bagging system will plug.

Cutting Frequency

Cut the grass often, especially when it grows rapidly. You will have to cut your grass twice if it gets excessively long.

Cutting Technique

For best lawn appearance, be sure to slightly overlap the mower into the previously cut area. This helps reduce the load on the engine and reduces the chance of plugging the chute and discharge tube.

Bagging Speed

Most often you will bag with the mower throttle in the Fast position and drive at a normal ground speed. However, in extremely dry and dusty grass, you may want to slightly reduce the throttle speed and increase the ground speed of the mower. The bagging system may plug if you drive too fast and the engine speed gets too slow. On hills it may be necessary to slow the mower ground speed. This helps maintain the engine speed and bagging efficiency. Mow downhill whenever possible.

⚠ CAUTION

As the bagger fills, extra weight is added to the back of the machine. If you stop and start suddenly on hills, you may lose steering control or the machine may tip.

- **Do not start or stop suddenly when going uphill or downhill. Avoid uphill starts.**
- **If you do stop the machine when going uphill, disengage the blade control. Then back down the hill using a slow speed.**
- **Avoid sudden turns or rapid speed changes on slopes.**
- **Never operate the machine without the bagger attachment and the front weights still installed.**

Bagging Long Grass

Excessively long grass is heavy and may not be propelled completely into the grass bags. If this happens, the discharge tube and chute may plug. To avoid plugging the bagging system, mow the grass at a high height of cut, then lower the mower to your normal cutting height and repeat the bagging process.

Bagging Wet Grass

Always try to cut grass when it is dry because your lawn will have a neat appearance. If you must cut wet grass, use the conventional side discharge feature of the mower. Several hours later, when the clippings are dry, install the complete bagger attachment and vacuum up the grass clippings.

Signs of Plugging

As you are bagging, a small amount of grass clippings normally blow out the front of the mower. An excessive amount of clippings blowing out indicates that the bags are full or the system is plugged.

Maintenance

Note: Determine the left and right sides of the machine from the normal operating position.

Recommended Maintenance Schedule(s)

Maintenance Service Interval	Maintenance Procedure
After the first 10 hours	• Inspect the bagger.
Before each use or daily	• Clean the bagger.
Before storage	• Inspect the bagger. • Clean the bagger.

⚠ CAUTION

If you leave the key in the ignition switch, someone could accidently start the engine and seriously injure you or other bystanders.

Remove the key from the ignition and disconnect the wire from the spark plug before you do any maintenance. Set the wire aside so that it does not accidentally contact the spark plug.

⚠ WARNING

An engine can become hot while it operates. Severe burns can occur from contacting hot surfaces.

Allow the engine, especially the muffler, to cool before touching it.

⚠ WARNING

Debris, such as leaves, grass, or brush can catch fire. A fire in the engine area can cause personal injury and property damage.

- **Keep the engine and muffler area free of debris accumulation.**
- **Take care when opening the bagger cover to keep debris from falling onto the engine and muffler area.**
- **Allow the machine to cool before storing it.**

Inspecting the Bagger Attachment

Service Interval: After the first 10 hours
Before storage

Inspect the bagger attachment after the first 10 hours of operation, and monthly thereafter.

1. Check the chute, discharge tube, and the bagger top. Replace these parts if they are cracked or broken.
2. Tighten all nuts, bolts, and screws.
3. Inspect all fasteners and latches; replace any missing or damaged.
4. Inspect the grass bags for deterioration.

⚠ WARNING

You or bystanders could be severely injured by flying debris or thrown objects that may pass through torn, worn, or deteriorated grass bags.

- **Check the grass bags for holes, rips, wear, and other deterioration.**
- **Do not wash the grass bags.**
- **If the bag has deteriorated, install new grass bags supplied by the manufacturer of this bagger attachment.**

Inspecting the Mower Blades

Inspect the mower blades regularly and whenever a blade strikes a foreign object.

If the blades are badly worn or damaged, install new blades. Refer to your mower or mower *Operator's Manual* for complete blade maintenance.

Cleaning the Bagger Attachment

Service Interval: Before each use or daily

Before storage

Note: To prevent rapid deterioration of the bag material, store the bags where they will dry completely after each use.

1. After each use, remove and wash the inside and outside of the bagger top, discharge tube, chute, and the underside of the mower, using water sprayed from a garden hose. Use a mild detergent to remove stubborn dirt.
2. Make sure you remove matted grass from all parts.
3. Flush the grass bags with water using garden hose to remove any debris.
4. After washing, let all of the parts dry thoroughly.

Storage

Storing the Bagger Attachment

1. Clean the bagger attachment; refer to Cleaning the Bagger Attachment (page 21).
2. Inspect the bagger attachment for damage; refer to Inspecting the Bagger Attachment (page 20).
3. Make sure the grass bags are empty and thoroughly dry.
4. Store the bagger in a clean, dry place, out of direct sunlight. This protects the plastic parts and extends the life of the bagger. If you must store the bagger outside, cover it with a weatherproof cover.

Notes:

Notes:

California Proposition 65 Warning Information

What is this warning?

You may see a product for sale that has a warning label like the following:



WARNING: Cancer and Reproductive Harm—www.p65Warnings.ca.gov.

What is Prop 65?

Prop 65 applies to any company operating in California, selling products in California, or manufacturing products that may be sold in or brought into California. It mandates that the Governor of California maintain and publish a list of chemicals known to cause cancer, birth defects, and/or other reproductive harm. The list, which is updated annually, includes hundreds of chemicals found in many everyday items. The purpose of Prop 65 is to inform the public about exposure to these chemicals.

Prop 65 does not ban the sale of products containing these chemicals but instead requires warnings on any product, product packaging, or literature with the product. Moreover, a Prop 65 warning does not mean that a product is in violation of any product safety standards or requirements. In fact, the California government has clarified that a Prop 65 warning "is not the same as a regulatory decision that a product is 'safe' or 'unsafe.'" Many of these chemicals have been used in everyday products for years without documented harm. For more information, go to https://oag.ca.gov/prop65/faqs-view-all.

A Prop 65 warning means that a company has either (1) evaluated the exposure and has concluded that it exceeds the "no significant risk level"; or (2) has chosen to provide a warning based on its understanding about the presence of a listed chemical without attempting to evaluate the exposure.

Does this law apply everywhere?

Prop 65 warnings are required under California law only. These warnings are seen throughout California in a wide range of settings, including but not limited to restaurants, grocery stores, hotels, schools, and hospitals, and on a wide variety of products. Additionally, some online and mail order retailers provide Prop 65 warnings on their websites or in catalogs.

How do the California warnings compare to federal limits?

Prop 65 standards are often more stringent than federal and international standards. There are various substances that require a Prop 65 warning at levels that are far lower than federal action limits. For example, the Prop 65 standard for warnings for lead is 0.5 µg/day, which is well below the federal and international standards.

Why don't all similar products carry the warning?

- Products sold in California require Prop 65 labelling while similar products sold elsewhere do not.
- A company involved in a Prop 65 lawsuit reaching a settlement may be required to use Prop 65 warnings for its products, but other companies making similar products may have no such requirement.
- The enforcement of Prop 65 is inconsistent.
- Companies may elect not to provide warnings because they conclude that they are not required to do so under Prop 65; a lack of warnings for a product does not mean that the product is free of listed chemicals at similar levels.

Why do we include this warning?

Our company has chosen to provide consumers with as much information as possible so that they can make informed decisions about the products they buy and use. We provide warnings in certain cases based on its knowledge of the presence of one or more listed chemicals without evaluating the level of exposure, as not all the listed chemicals provide exposure limit requirements. While the exposure from our products may be negligible or well within the "no significant risk" range, out of an abundance of caution, we have elected to provide the Prop 65 warnings. Moreover, if we do not provide these warnings, it could be sued by the State of California or by private parties seeking to enforce Prop 65 and subject to substantial penalties.