Operator's Manual

Vertex® V-Series Mower

Model—Serial Range

VXV060B1852A00—417930746 and Up

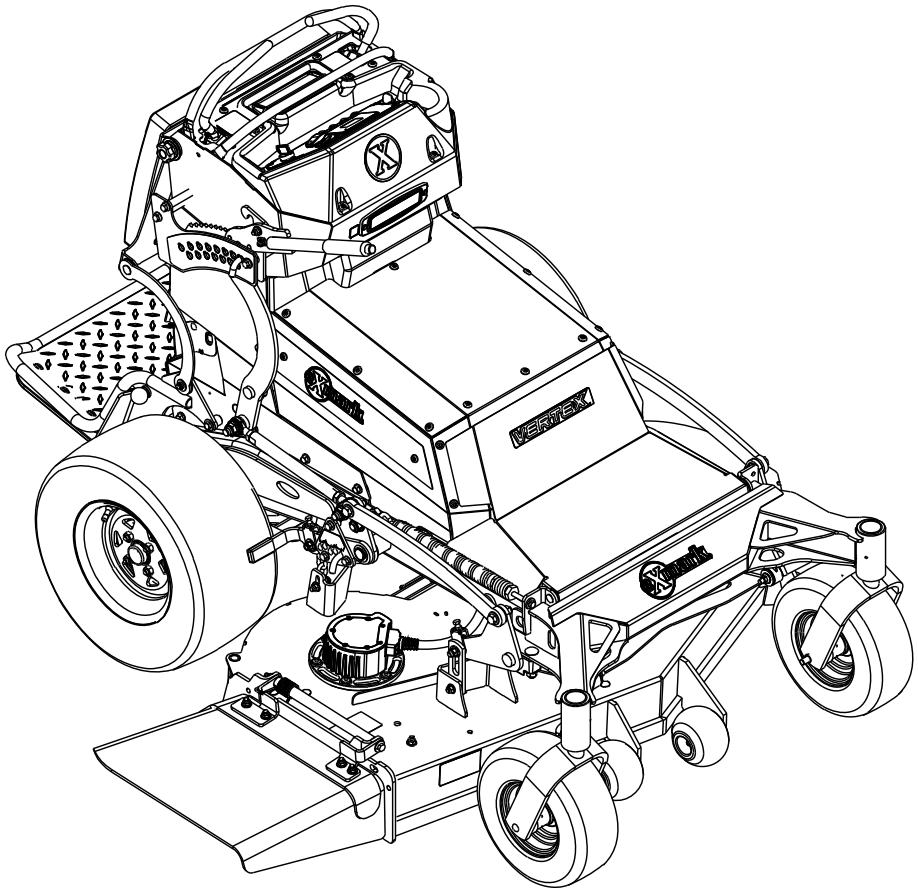

4507-672A

Original Instructions (EN)

4507-672

Disclaimers and Regulatory Information

⚠ WARNING

CALIFORNIA
Proposition 65

The power cord on this product contains lead, a chemical known to the State of California to cause birth defects or other reproductive harm. Wash hands after handling.

Battery posts, terminals, and related accessories contain lead and lead compounds, chemicals known to the State of California to cause cancer and reproductive harm. Wash hands after handling.

Use of this product may cause exposure to chemicals known to the State of California to cause cancer, birth defects, or other reproductive harm.

Table of Contents

Chapter 1: Introduction 1–1
- Intended Use 1–1
- Getting Help 1–1
- Manual Conventions 1–1
  - Safety Alert Classifications 1–2

Chapter 2: Safety 2–1
- General Machine Safety Warnings 2–1
- Lawnmower Safety Warnings 2–3
- General Safety 2–4
- Safety and Instructional Decals 2–5

Chapter 3: Setup 3–1
- Adjusting the Machine Settings 3–1
- Mounting the Battery Charger on a Wall 3–1
- Charging the Batteries 3–1
- Checking for Firmware Updates 3–1
- Checking Tire Pressure 3–1
- Positioning the Discharge Deflector 3–1

Chapter 4: Product Overview 4–1
- Control Panel 4–2
- Motion-Control Levers 4–3
  - Park Position 4–3
- Display 4–3
  - Charging Screen 4–4
  - Main Information Screens 4–4
  - Icon Descriptions 4–5
  - Menus 4–5
  - Accessing Protected Menus 4–8
- Specifications 4–8
- Attachments/Accessories 4–11

Chapter 5: Operation 5–1

© 2025—Exmark Mfg. Co., Inc.

415 Industrial Row
Beatrice, NE 68310

Contact us at www.Exmark.com
All rights reserved

Before Operation 5–1
Before Operation Safety 5–1
Performing Daily Maintenance 5–1
Safety-Interlock System 5–2
During Operation 5–5
During Operation Safety 5–5
Starting the Machine 5–6
Shutting Off the Machine 5–6
Operating the Mower Blade-Control Switch (PTO) 5–7
Side Discharge 5–8
Platform Overview 5–9
Driving the Machine 5–11
Adjusting the Height of Cut 5–12
Adjusting the Rake of the Mower Deck 5–13
Weights 5–14
Battery-System Charge Level 5–14
Adjusting the Battery Percentage for Limp Mode 5–15
After Operation 5–15
After Operation Safety 5–15
Battery and Charger Safety 5–16
Hauling the Machine 5–17
Lithium-Ion Battery Charger 5–20
Chapter 6: Maintenance 6–1
Maintenance Safety 6–1
Recommended Maintenance Schedule 6–2
Pre-Maintenance Procedures 6–2
Accessing Internal Components 6–2
Moving a Non-Functioning Machine 6–3
Lubrication 6–5
Greasing the Machine 6–5
Greasing the Front Caster Pivots 6–5
Greasing the Caster-Wheel Hubs 6–5
Electrical System Maintenance 6–7
Using the Battery-Disconnect Switch 6–7
Battery Service 6–8
Lithium-Ion Battery Maintenance 6–8
Battery Charger Maintenance 6–9
Fuse Locations 6–10
Drive System Maintenance 6–13
Tire Pressure 6–13
Adjusting the Caster-Pivot Bearing 6–13
Servicing the Caster Wheels and Bearings 6–14
Checking the Wheel-Lug Nuts 6–15
Changing the Transmission Fluid 6–16
Adjusting the Maximum Speed Range 6–18
Controls Maintenance 6–20
Calibrating the Levers 6–20
Adjusting the Tracking 6–21
Adjusting the Motion-Control Levers 6–22
Mower-Deck Maintenance 6–24
Blade Service 6–24
Leveling the Mower Deck 6–27
Adjusting the Deck-Lift Spring 6–32

Replacing the Grass Deflector 6–33
Hydraulic System Maintenance 6–35
Cleaning 6–35
Cleaning under the Mower Deck 6–35
Disposing of Waste 6–35
Chapter 7: Storage 7–1
Preparing the Machine for Storage Over 30 Days 7–1
Battery Storage Requirements 7–1
Storing the Charger 7–2
Chapter 8: Troubleshooting 8–1
Machine Troubleshooting 8–1
Battery-Charger Error Codes 8–2
Battery-Charger Fault Codes 8–4
Chapter 9: Schematics 9–1
Electrical Diagram 9–1
California Proposition 65 Warning Information

Chapter 1

Introduction

Intended Use

This rotary-blade, stand-on lawn mower is intended to be used by professional, hired operators. It is designed primarily for cutting grass on well-maintained lawns on residential or commercial properties. Using this product for purposes other than its intended use could prove dangerous to you and bystanders.

Read this information carefully to learn how to operate and maintain the product properly and to avoid injury and product damage. The operator is responsible for operating the product properly and safely.

Getting Help

Visit www.Exmark.com for product safety and operation training materials, accessory information, help finding a dealer, or to register your product.

Whenever you need service, genuine Exmark parts, or additional information, contact an Authorized Service Dealer or Exmark Customer Service and have the model and serial numbers of your product ready. These numbers are located on the serial plate on your product (1). Write the numbers in the space provided.

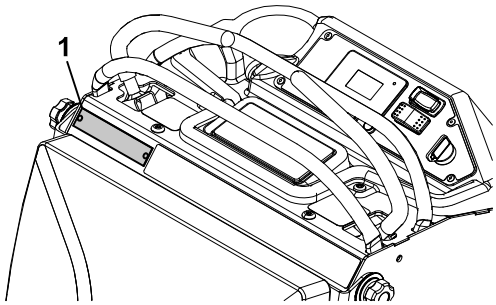

G505931

IMPORTANT

With your mobile device, you can scan the QR code on the serial number decal (if equipped) to access warranty, parts, and other product information.

Model Number:		**Serial Number:**	

Manual Conventions

This manual identifies potential hazards and has safety messages identified by the safety-alert symbol, which signals a hazard that may cause serious injury or death if you do not follow the recommended precautions.



G405934

This manual uses 2 words to highlight information. **Important** calls attention to special mechanical information and **Note** emphasizes general information worthy of special attention.

Safety Alert Classifications

The safety-alert symbol shown in this manual and on the machine identifies important safety messages that you must follow to prevent accidents.

Safety-alert symbol appears above information that alerts you to unsafe actions or situations and is followed by the word **DANGER**, **WARNING**, or **CAUTION**.

DANGER

Danger indicates an imminently hazardous situation which, if not avoided, *will* result in death or serious injury.

WARNING

Warning indicates a potentially hazardous situation which, if not avoided, *could* result in death or serious injury.

CAUTION

Caution indicates a potentially hazardous situation which, if not avoided, *may* result in minor or moderate injury.

General Machine Safety Warnings

WARNING—Read all safety warnings, instructions, illustrations and specifications provided with this machine.

Failure to follow the warnings and instructions may result in electric shock, fire and/or serious injury.

The term "machine" in all of the warnings listed below refers to your mains-operated (corded) machine or battery-operated (cordless) machine.

1. **Work area safety**

   A. **Keep work area clean and well lit.** *Cluttered or dark areas invite accidents.*

   B. **Do not operate the machine in explosive atmospheres, such as in the presence of flammable liquids, gasses, or dust.** *The machine creates sparks, which may ignite the dust or fumes.*

   C. **Keep children and bystanders away while operating the machine.** *Distractions can cause you to lose control.*

2. **Electrical safety**

   A. **Machine plugs must match the outlet. Never modify the plug in any way. Do not use any adapter plugs with an earthed (grounded) machine.** *Unmodified plugs and matching outlets will reduce risk of electric shock.*

   B. **Avoid body contact with earthed or grounded surfaces, such as pipes, radiators, ranges, and refrigerators.** *There is an increased risk of electric shock if your body is earthed or grounded.*

   C. **Do not expose the machine to rain or wet conditions.** *Water entering a machine will increase the risk of electric shock.*

   D. **Do not abuse the cord. Never use the cord for carrying, pulling or unplugging the machine. Keep cord away from heat, oil, sharp edges, or moving parts.** *Damaged or entangled cords increase the risk of electric shock.*

   E. **When operating the machine outdoors, use an extension cord suitable for outdoor use.** *Use of a cord suitable for outdoor use reduces the risk of electric shock.*

   F. **If operating the machine in a damp location is unavoidable, use a residual current device (RCD) protected supply.** *Use of an RCD reduces the risk of electric shock.*

3. **Personal safety**

   A. **Stay alert, watch what you are doing, and use common sense when operating the machine. Do not use the machine while you are tired or under the influence of drugs, alcohol, or medication.** *A moment of inattention while operating the machine may result in serious personal injury.*

   B. **Use personal protective equipment. Always wear eye protection.** *Protective equipment such as a dust mask, non-skid safety shoes, or hearing protection used for appropriate conditions will reduce personal injuries.*

   C. **Prevent unintentional starting. Ensure the switch is in the off-position before connecting to power source and/or battery pack.** *Energising a machine that has the switch on invites accidents.*

   D. **Remove any adjusting key or wrench before turning the machine on.** *A wrench or a key left attached to a rotating part of the machine may result in personal injury.*

   E. **Do not overreach. Keep proper footing and balance at all times.** *This enables better control of the machine in unexpected situations.*

   F. **Dress properly. Do not wear loose clothing or jewelry. Keep your hair and clothing away from moving parts.** *Loose clothes, jewelry or long hair can be caught in moving parts.*

   G. **If devices are provided for the connection of dust extraction and collection facilities, ensure these are connected and properly used.** *Use of dust collection can reduce dust-related hazards.*

   H. **Do not let familiarity gained from frequent use of the machine allow you to become complacent and ignore machine safety principles.** *A careless action can cause severe injury within a fraction of a second.*

4. **Machine use and care**

   A. **Do not force the machine. Use the correct machine for your application.** *The correct machine will do the job better and safer at the rate for which it was designed.*

   B. **Do not use the machine if the switch does not turn it on and off.** *Any machine that cannot be controlled with the switch is dangerous and must be repaired.*

   C. **Disconnect the plug from the power source and/or remove the battery pack, if detachable, from the machine before making any adjustments, changing accessories, or storing the machine.** *Such preventive safety measures reduce the risk of starting the machine accidentally.*

   D. **Store an idle machine out of the reach of children and do not allow persons unfamiliar with the machine or these instructions to operate the machine.** *A machine is dangerous in the hands of untrained users.*

   E. **Maintain the machine and accessories. Check for misalignment or binding of moving parts, breakage of parts and any other condition that may affect the operation of the machine. If damaged, have the machine repaired before use.** *Many accidents are caused by a poorly maintained machine.*

   F. **Keep cutting tools sharp and clean.** *Properly maintained cutting tools with sharp cutting edges are less likely to bind and are easier to control.*

   G. **Use the machine, accessories, and tool bits etc., in accordance with these instructions, taking into account the working conditions and the work to be**

performed. *Use of the machine for operations different from those intended could result in a hazardous situation.*

H. **Keep handles and grasping surfaces dry, clean and free from oil and grease.** *Slippery handles and grasping surfaces do not allow for safe handling and control of the machine in unexpected situations.*

5. **Battery machine use and care**

   A. **Recharge only with the charger specified by a manufacturer.** *A charger that is suitable for one type of battery pack may create a risk of fire when used with another battery pack.*

   B. **Use the machine only with specifically designated batteries.** *Use of any other batteries may create a risk of injury and fire.*

   C. **When battery pack is not in use, keep it away from other metal objects, like paper clips, coins, keys, nails, screws or other small metal objects, that can make a connection from one terminal to another.** *Shorting the battery terminals together may cause burns or a fire.*

   D. **Under abusive conditions, liquid may be ejected from the battery; avoid contact. If contact accidentally occurs, flush with water. If liquid contacts eyes, additionally seek medical help.** *Liquid ejected from the battery may cause irritation or burns.*

   E. **Do not use a battery pack or machine that is damaged or modified.** *Damaged or modified batteries may exhibit unpredictable behavior resulting in fire, explosion or risk or injury.*

   F. **Do not expose a battery pack or machine to fire or excessive temperature.** *Exposure to fire temperature above 130°C (265°F) may cause an explosion.*

   G. **Follow all charging instructions and do not charge the battery pack or machine outside the temperature range specified in the instructions.** *Charging improperly or at temperatures outside the specified range may damage the battery and increase the risk of fire.*

6. **Service**

   A. **Have your machine serviced by a qualified repair person using only identical replacement parts.** *This will ensure that the safety of the machine is maintained.*

   B. **Never service damaged battery packs.** *Service of battery packs should be performed only by the manufacturer or authorized service providers.*

Lawnmower Safety Warnings

A. **Do not use the lawnmower in bad weather conditions, especially when there is a risk of lightning.** *This decreases the risk of being struck by lightning.*

B. **Thoroughly inspect the area for wildlife where the lawnmower is to be used.** *Wildlife may be injured by the lawnmower during operation.*

C. **Thoroughly inspect the area where the lawnmower is to be used and remove all stones, sticks, wires, bones, and other foreign objects.** *Thrown objects can cause personal injury.*

D. **Before using the lawnmower, always visually inspect to see that the blade and the blade assembly are not worn or damaged.** *Worn or damaged parts increase the risk of injury.*

E. **Keep guards in place. Guards must be in working order and be properly mounted.** *A guard that is loose, damaged, or is not functioning correctly may result in personal injury.*

F. **Keep all cooling air inlets clear of debris.** *Blocked air inlets and debris may result in overheating or risk of fire.*

G. **While operating the lawnmower, always wear non-slip and protective footwear. Do not operate the lawnmower when barefoot or wearing open sandals.** *This reduces the chance of injury to the feet from contact with the moving blade.*

H. **While operating the lawnmower, always wear long trousers.** *Exposed skin increases the likelihood of injury from thrown objects.*

I. **Do not operate the lawnmower on slopes greater than 15°.** *This reduces the risk of loss of control, slipping, and rollover which may result in personal injury.*

J. **Exercise extreme caution when working on slopes.** *This reduces the risk of loss of control, slipping, and rollover which may result in personal injury.*

K. **Use extreme caution when reversing the lawnmower.** *Always be aware of your surroundings.*

L. **Do not touch blades and other hazardous moving parts while they are still in motion.** *This reduces the risk of injury from moving parts.*

M. **When clearing jammed material or cleaning the lawnmower, make sure all power switches are off, and remove the key.** *Unexpected operation of the lawnmower may result in serious personal injury.*

Save all warnings and instructions for future reference.

General Safety

This product is capable of amputating hands and feet and of throwing objects. Always follow all safety instructions to avoid serious personal injury or death.

- Keep clear of the discharge opening.
- Allow only responsible and physically capable people to operate the machine.
- Shut off the machine, remove the key, and wait for all moving parts to stop before leaving the operator's position. Allow the machine to cool before servicing, adjusting, or cleaning it.

Safety and Instructional Decals

Safety decals and instructions are easily visible to the operator and are located near any area of potential danger. Replace any decal that is damaged or missing.

Decal Part: 133-8061



s_decal133-8061

Decal Part: 137-8127

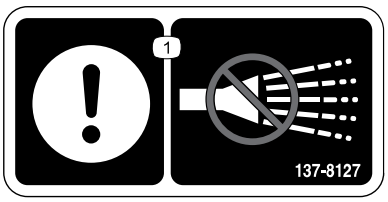

s_decal137-8127

(1) Attention—do not spray with high-pressure water.

Decal Part: 144-0275



decal144-0275

(1) Batteries are flammable.

Decal Part: 144-0276

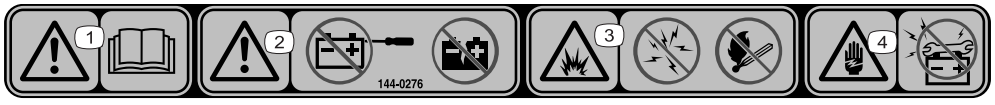

decal144-0276

(1) Warning—read the *Operator's Manual*.

(2) Warning—do not open the battery; do not use a damaged battery.

(3) Explosion hazard—do not expose to fire or open flame.

(4) Electric shock hazard—do not perform maintenance on the battery.

Decal Part: 144-0277

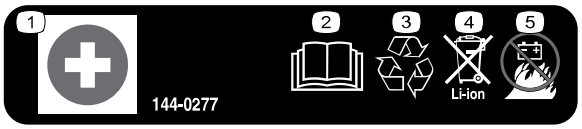

decal144-0277

1. Positive terminal
2. Read the *Operator's Manual*.
3. Recycle the battery.
4. Do not dispose improperly.
5. Do not expose to fire.

Decal Part: 144-0278



s_decal144-0278

1. Negative battery terminal

Decal Part: 144-7002

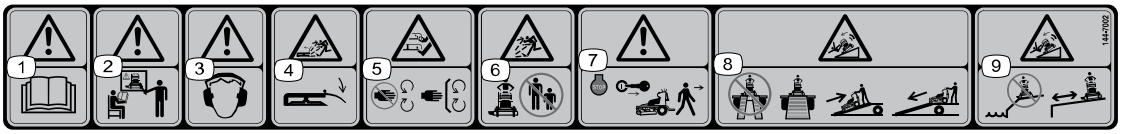

s_decal144-7002

1. Warning—read the *Operator's Manual*.
2. Warning—all operators should be trained before operating the machine.
3. Warning—wear hearing protection.
4. Thrown object hazard, mower—lower the deflector before operating the machine.
5. Cutting/dismemberment hazard of hand or foot, mower blade—stay away from moving parts; keep all guards and shields in place.
6. Thrown object hazard—keep bystanders away.
7. Warning—shut off the machine and remove the key before leaving the machine or performing maintenance.
8. Tipping hazard—do not use dual ramps when loading onto a trailer; use 1 ramp wide enough for the machine; back up the ramp when loading the machine and drive forward off the ramp when unloading.
9. Tipping hazard—do not use the machine near drop-offs or on slopes; stay at least 2 widths of the machine away from drop-offs.

Decal Part: 144-7003

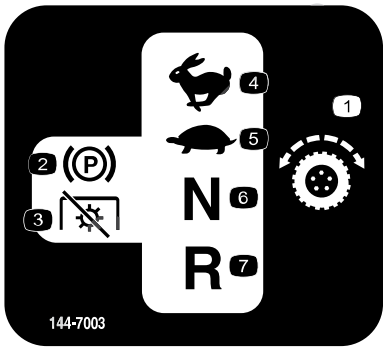

s_decal144-7003

1. Traction drive
2. Parking brake
3. Power takeoff (PTO)—disengaged
4. Fast
5. Slow
6. Neutral
7. Reverse

Decal Part: 144-7004

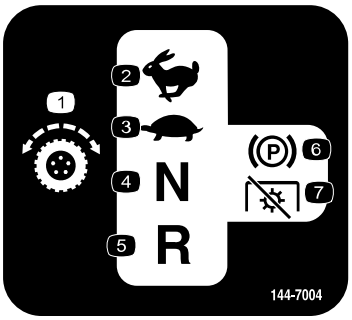

s_decal144-7004

1. Traction drive
2. Fast
3. Slow
4. Neutral
5. Reverse
6. Parking brake
7. Power takeoff (PTO)—disengaged

Decal Part: 144-7006



s_decal144-7006

1. Thrown object hazard—keep bystanders away.
2. Thrown object hazard, mower—do not operate without the deflector, discharge cover, or grass collection system in place.
3. Cutting/dismemberment hazard of hand or foot, mower blade—keep away from moving parts.

Decal Part: 144-7008

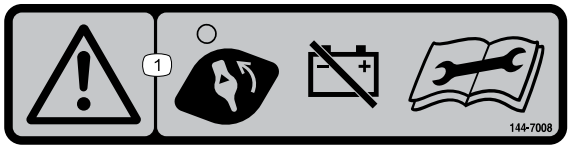

s_decal144-7008

1. Warning—turn the battery-disconnect switch to the OFF position before performing maintenance.

Decal Part: 146-1210

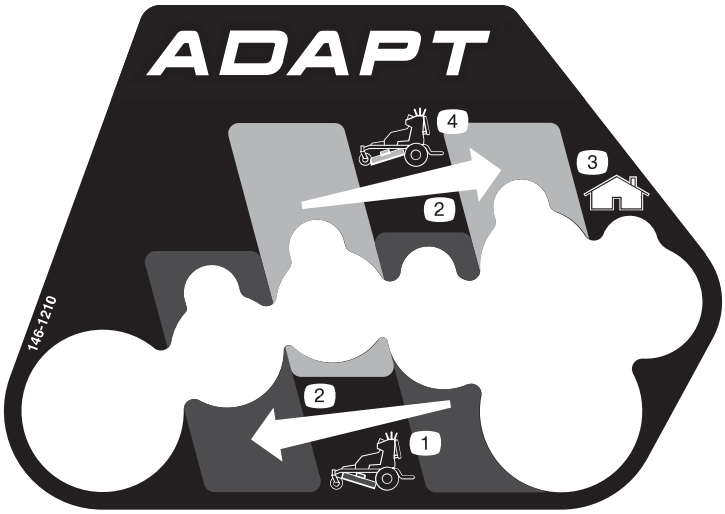

s_decal146-1210

1. Negative rake
2. Increase
3. Home position
4. Positive rake

Decal Part: 146-1265

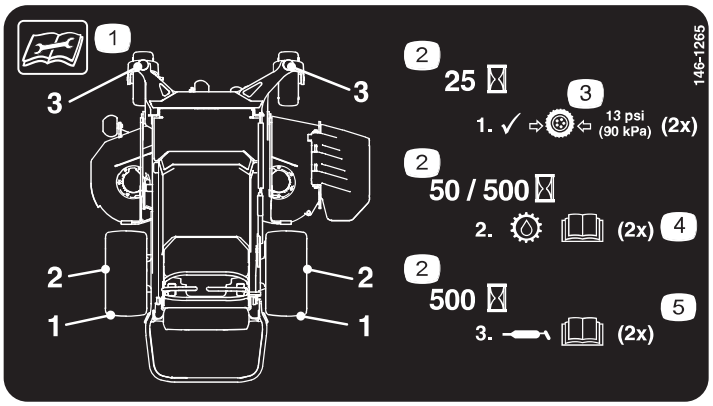

s_decal146-1265

1. Read the *Operator's Manual* before performing maintenance.
2. Service interval (hours)
3. Check the tire pressure.
4. Service the transmission fluid; refer to the *Operator's Manual*.
5. Grease the caster pivots; refer to the *Operator's Manual*.

Decal Part: 146-1266

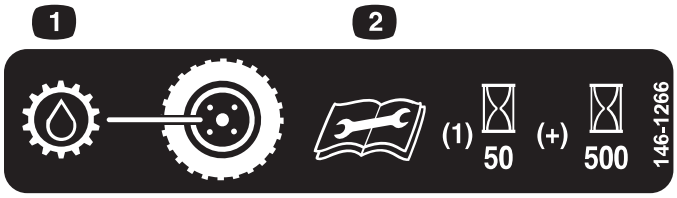

s_decal146-1266

1. Transmission fluid
2. Read the *Operator's Manual* before performing maintenance; change the transmission fluid after the first 50 hours then every 500 hours thereafter.

Decal Part: 146-1269

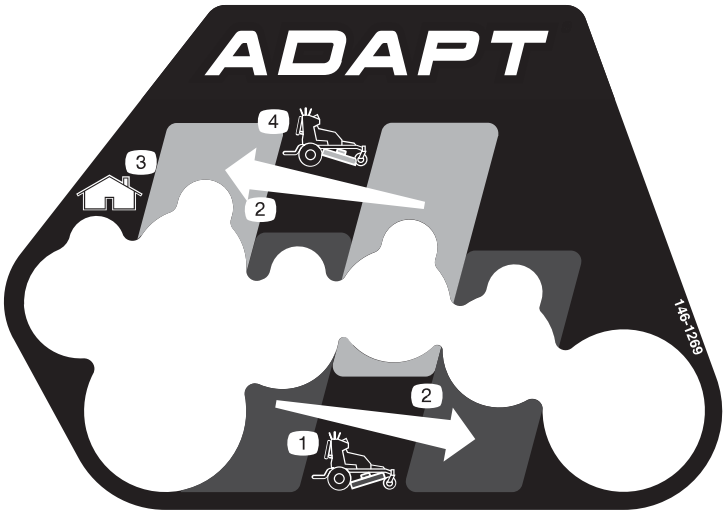

s_decal146-1269

1. Negative rake
2. Increase
3. Home position
4. Positive rake

Decal Part: 147-1681

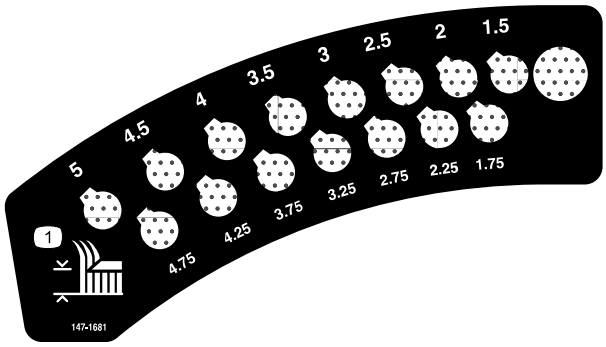

s_decal147-1681

1 Height of cut

Decal Part: 147-0288

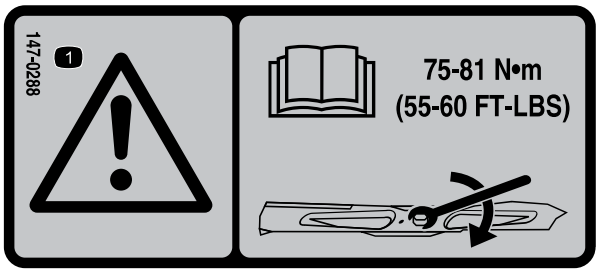

s_decal147-0288

1 Warning—read the *Operator's Manual* for instructions on torquing the blade bolt/nut to 75 to 81 N·m (55 to 60 ft-lb).

Decal Part: 147-0289

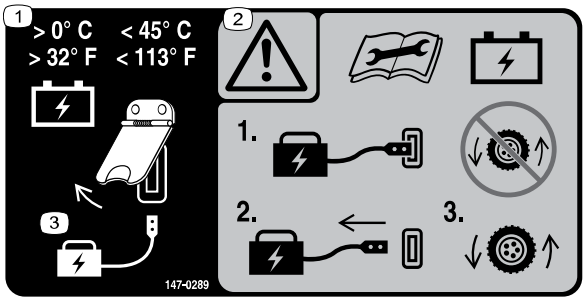

s_decal147-0289

1 Keep the battery at a temperature above 0°C (32°F) and below 45°C (113° F)

2 Warning—read the *Operator's Manual* before performing battery maintenance; do not operate the machine when the battery charger is connected; disconnect the battery charger before operating the machine.

3 Lift the cover to charge the battery.

Decal Part: 147-0290



decal147-0290

1 Warning—light is bright; do not look directly into the light.

Decal Part: 147-6260

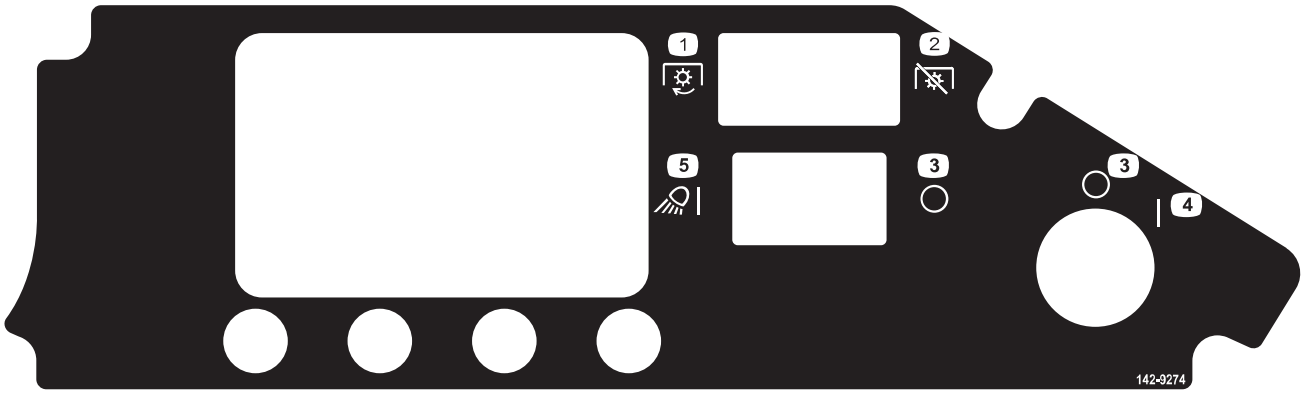

s_decal147-6260

1. Power takeoff (PTO) — engaged
2. Power takeoff (PTO) — disengaged
3. Off
4. On
5. Lights — On

Adjusting the Machine Settings

Use the InfoCenter display to adjust the machine settings.

Mounting the Battery Charger on a Wall

Optional

You can mount the charger on a wall using the wall-mount key holes cut into the back of the unit. Use screws that have a 6 mm (1/4 inch) diameter shaft and a head diameter of 11 mm (0.45 inch)

IMPORTANT

Survey your work area and determine a location that best meets the criteria for safe and effective operation of the charger.

Charging the Batteries

Charge the batteries.

Checking for Firmware Updates

Connect the machine to Exmark Diagnostics to see if the firmware needs an update.

Checking Tire Pressure

1. Check the tire pressure in the drive tires. The proper inflation for the drive tires is 83 to 97 kPa (12 to 14 psi).
2. Adjust if necessary.

Positioning the Discharge Deflector

Loosen the 2 nyloc nuts (3/8 inch) attaching the discharge deflector. Lower the discharge deflector into position. Retighten the nyloc nuts until the deflector is snug but can pivot freely.

Chapter 4

Product Overview

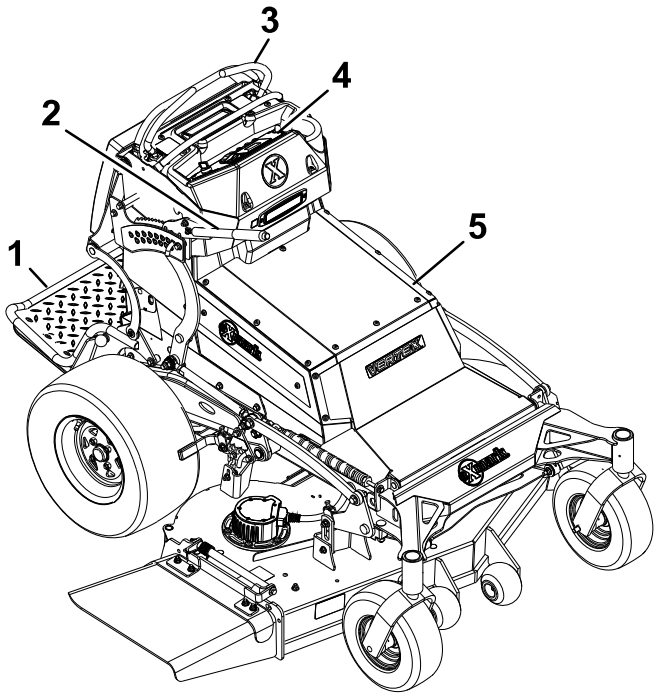

G506014

1. Platform
2. Deck lift and height of cut
3. Motion controls
4. Controls
5. Battery compartment

Control Panel

Become familiar with all the controls before you start and operate the machine.

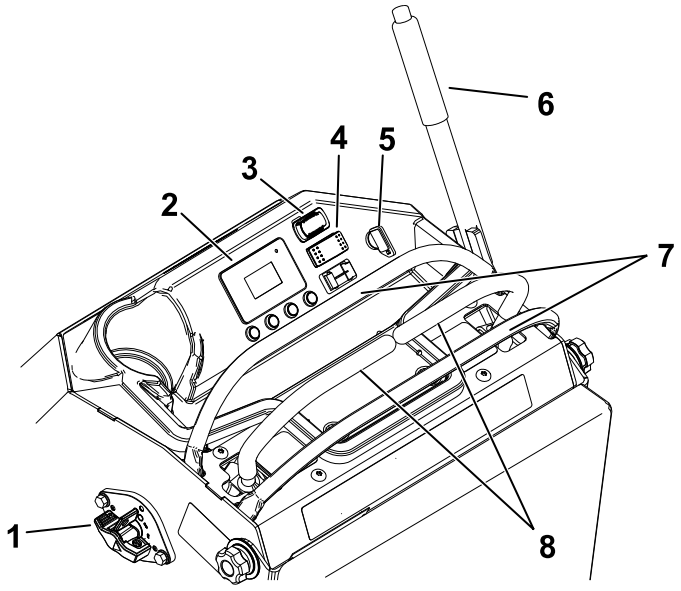

G473226

1. Battery-disconnect switch
2. InfoCenter
3. Power-takeoff switch (PTO)
4. Light switch
5. Key switch
6. Height-of-cut lever
7. Reference bar
8. Motion-control lever

Splash Screen

The splash screen shows the battery charge for a few seconds after you move the key to the ON position.

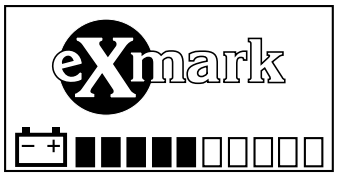

G506101

Key Switch

Use the key switch to power the machine ON (2) or OFF (1). Turn the key past the ON position to start the machine.

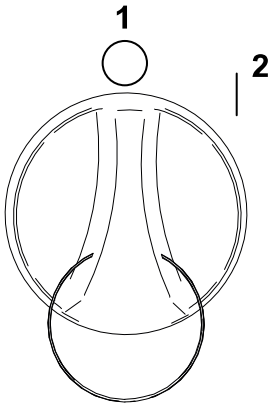

G444702

Power-Takeoff Switch

Use the power-takeoff switch (PTO) to engage and disengage mower blades or start and stop powered attachments.

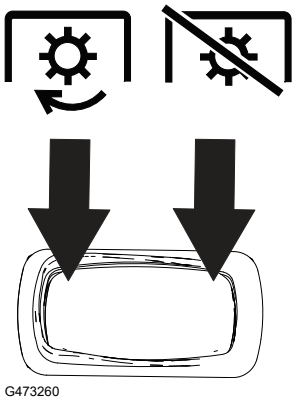

G473260

Light Switch

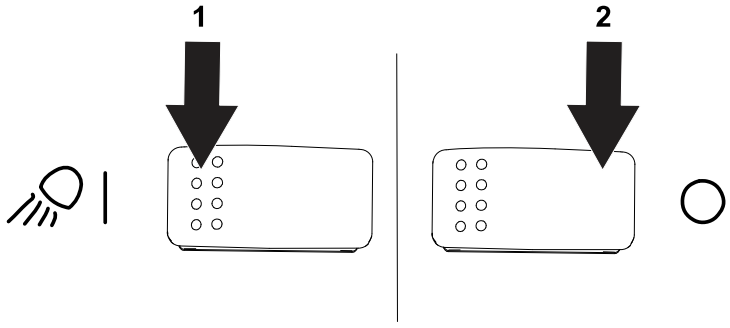

G473262

1 On

2 Off

Motion-Control Levers

Use the motion-control levers to drive the machine forward, reverse, and turn either direction.

Park Position

Move the motion-control levers outward from the center to the PARK position when exiting the machine to engage the electric brake.

Always move the motion-control levers to the PARK position when you stop the machine or leave it unattended.

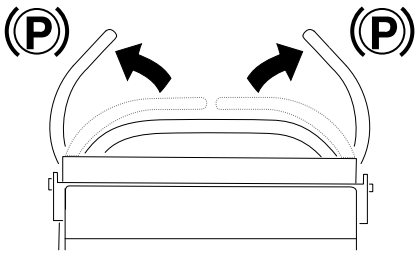

G473261

Display

The display shows information about your machine, such as the operating status, various diagnostics, and other information about the machine.

Charging Screen

The charging screen shows the battery charge percentage and amperage.

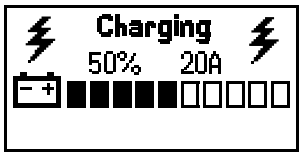

G473390

Main Information Screens

The main information screens shows current machine information while the key is in the ON position. This screen shows the battery-system charge level and the status of various components. Press the → button to cycle through the screens. Press the + and - buttons to adjust the maximum traction speed and mower blade speed.

Safety-Interlock Indicators

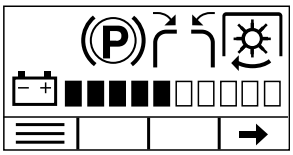

G473474

Operating Hours

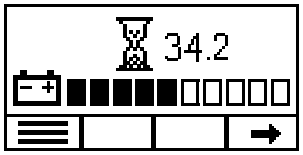

G473476

Mower Blade Motor Status

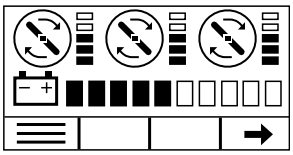

G473477

Traction Speed

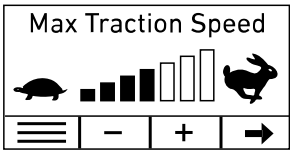

G473478

Mower Blade Motor Speed

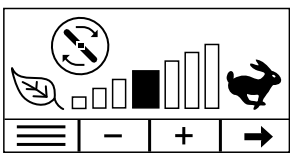

G473479

Icon Descriptions

	Next
	Scroll up
	Scroll down
	Enter main menu
	Change language setting
	Increase
	Decrease
	Exit menu
	Save
	Hour meter

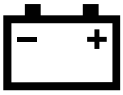	Battery charge
	Motion-control levers are in the unlocked position.
	Parking brake is engaged.
	PTO is engaged.
	Mower blade
	Traction drive
	Fast
	Slow
	Energy-saving
	The traction speed or menu item is locked.

Menus

To access the main menu, press the  button from any of the main information screens.

Note: Protected under Protected Menus—accessible only by entering PIN.

Menus (continued)

Main Menu

Menu Item	Description
Faults	This menu contains a list of the recent machine faults. Refer to the *Service Manual* or your Authorized Service Dealer.
Service	This menu contains information on the machine such as hours of use and counts, power, lever calibration, and tracking.
Diagnostics	This menu lists various states and data that the machine currently has. You can use this information to troubleshoot certain issues.
Settings	This menu allows you to customize and modify configuration variables on the InfoCenter display.
About	This menu lists the model number, serial number, and software version (if PIN is entered) of your machine.

Faults Menu

Menu Item	Description
Current	Lists the total number of key-on hours (i.e., hours that the key has been in the On position).
Last	Indicates the last key-on hour that the fault occurred on.
First	Indicates the first key-on hour that the fault occurred on.
Occurrences	Indicates the number of fault occurrences.

Service Menu

Menu Item	Description
Hours	Lists the total number of hours various components have been used: • Key switch • Machine • Traction contactor • Cutter contactor • Neutral • Total mow time • Left traction • Right traction • Limp mode • Transport time
Counts	Lists the counts of various components: • Start cycles • Traction contactor • Cutter contactor • Cutter PTO

Menus (continued)

Menu Item	Description
Limp Mode	Displays and adjusts the battery percentage before limp mode starts.
Lever Calibration 🔒	Calibrates the motion-control levers.
Tracking 🔒	Adjusts the tracking of the motion-control levers.

Diagnostics Menu

Menu Item	Description
Battery Stack	Indicates the status of the batteries.
Battery Packs	Indicates the status of individual batteries.
CU Motors	Indicates the status of each cutting unit motor.
TU Motors	Indicates the status of each traction unit motor.

Settings Menu

Menu Item	Description
Language	Controls the language used on the display.
Backlight	Controls the brightness of the LCD display.
Contrast	Controls the contrast of the LCD display.
Protected Menus	Allows you to access protected menus by inputting a passcode.

About Menu

Menu Item	Description
Model	Lists the model number of the machine.
Serial	Lists the serial number of the machine.
Main Controller 🔒	Lists the software part number and revision of the main controller.
Display Controller 🔒	Lists the software part number and revision of the display controller.
TU Motors 🔒	Lists the software part number and revision of the traction unit motors.
CU Motors 🔒	Lists the software part number and revision of the cutting unit motors.
Battery Packs 🔒	Lists the software part number and revision of the battery packs.

Accessing Protected Menus

The factory default PIN code for you machine is `1234`.

If you changed the PIN code and forgot the code, contact your Authorized Service Dealer for assistance.

1. From the **Main Menu**, use the center button to scroll down to the **Settings Menu** and press the right button.

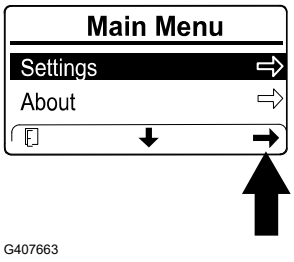

G407663

2. In the **Settings Menu**, use the center button to scroll down to the **Protected Menu** and press the right button.

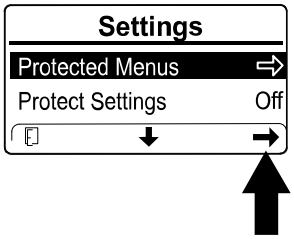

G407664

3. To enter the PIN code, press the 2 center buttons until the correct first digit appears (A), then press the right button to move on to the next digit. Repeat this step until the last digit is entered and press the right button once more (B).
4. Press the middle button to enter the PIN code (C).

   Note: If the display accepts the PIN code and the protected menu is unlocked, the word "`PIN`" displays in the upper right corner of the screen.

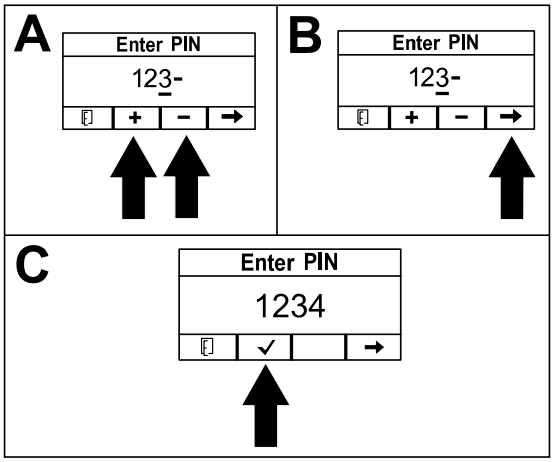

G473568

Specifications

Note: Specifications and design are subject to change without notice.

Dimensions

Width (deflector up)	136.5 cm (53.75 inches)
Width (deflector down)	165.1 cm (65 inches)
Tread width (center to center of tires, widthwise)	46.85 cm (119 inches)
Length (platform up)	156.2 cm (61.5 inches)
Length (platform down)	196.2 cm (77.25 inches)

Dimensions (continued)

Height	126.4 cm (49.75 inches)
Weight	525 kg (1158 lb)

Electrical System

Battery quantity	8
Rated voltage	60 VDC maximum and 55.2 VDC nominal usage
Amp hours	331.2 Ah

Safety Interlock

- LCD indicators appear for the parking brake, motion-control levers, and operator presence in the message display on the front control panel.

  Note: Because the PTO must be disengaged to start the machine, the LCD indicator will not illuminate at this time.
- PTO must be disengaged and motion-control levers must be in neutral to start the machine.

  Note: It is not necessary for the operator to be in the seat to start the machine.
- Mower blades will stop if the right and/or left side motion-control lever is moved or released outward.

Operator Controls

Steering Control: Fingertip drive control levers provide independent speed control, braking, and neutral to each drive wheel for moving forward or reverse, stopping, and power turning.

Transmission

- Speeds:
  - 16 km/h (10 mph) forward
  - 6 km/h (4 mph) reverse.
- Disengaging the drive wheel motor hubs allows the machine to be moved when engine is not running.
- Transmission Fluid Type: Exmark Synthetic Electric Motor Drive Oil (Part No. 146-1159)
- Transmission Fluid Capacity: 150 mL (5 fl oz)

Tires & Wheels

Front Caster Tires

	Semi-Pneumatic
Quantity	2

Tires & Wheels (continued)

Front Caster Tires (continued)

Tread	Smooth
Size	13 x 5-6
Ply Rating	4
Pressure	206 kPa (30 psi)

Drive Tires

	Pneumatic (Air-Filled)
Quantity	2
Tread	Hoosier
Size	20 x 10-10
Ply Rating	4
Pressure	90 kPa (13 psi)

Cutting Deck

- Cutting width: 132 cm (52 inches)
- Discharge: side
- Blade size: 45.7 cm (18 inches); Number of blades: 3
- Number of anti-scalp rollers: 3
- Deck: Full floating deck is attached to support frame, removable for service. The deck design allows for mulching or side discharge.
- Deck Depth: 14 cm (5.5 inches)
- Cutting height adjustment: The cutting height can be adjusted from 3.8 cm (1-1/2 inches) to 12.7 cm (5 inches) in 6.35 cm (1/4 inch) increments.
- Mulching Kit: optional

Torque Requirements

Bolt location	**Torque**
Motor mounting screws	30 to 38 N·m (22 to 28 ft-lb)
Blade mounting bolt (lubricate with anti-seize)	75 to 81 N·m (55 to 60 ft-lb)
Wheel lug nuts	75 to 85 N·m (55 to 65 ft-lb)
Wheel motor mounting bolts	37 to 45 N·m (27 to 33 ft-lb)
Wheel motor mounting frame	91 to 113 N·m (67 to 83 ft-lb)
Front deck strut to frame bolt	38 to 49 N·m (28 to 36 ft-lb)

Torque Requirements

Bolt location	Torque
Cutter housing spindle nut	176 to 217 N·m (130 to 160 ft-lb
Blade mounting bolt (lubricate with anti-seize)	68 to 81 N·m (50 to 60 ft-lb)
Engine mounting bolts	41 to 47 N·m (30 to 35 ft-lb)
Wheel lug nuts	115 to 142 N·m (85 to 105 ft-lb)
Wheel hub nuts (S-Series)	286 to 353 N·m (211 to 260 ft-lb)
Wheel motor mounting bolts (X-Series)	92 to 111 N·m (68 to 82 ft-lb)
Wheel motor mounting bolts (S-Series)	41 to 47 N·m (30 to 35 ft-lb)
Wheel motor mount to frame (S-Series)	61 to 75 N·m (45 to 55 ft-lb)
Engine deck to mower deck	115 to 142 N·m (85 to 105 ft-lb)
Rear deck strut to frame bolt (S-Series)	206 to 255 N·m (152 to 188 ft-lb)

Attachments/Accessories

A selection of Exmark approved attachments and accessories is available for use with the machine to enhance and expand its capabilities. Contact your Authorized Service Dealer or authorized Exmark distributor or go to www.Exmark.com for a list of all approved attachments and accessories.

To ensure optimum performance and continued safety certification of the machine, use only genuine Exmark replacement parts and accessories.

Before Operation

Before Operation Safety

- Do not operate the machine unless all safety switches and other devices are in place and working properly.
- Before leaving the operator's position for any reason, do the following:
  - Park the machine on a level surface.
  - Disengage the drives and the power take-off.
  - Engage the parking brake.
  - Shut off the machine and remove the key.
  - Wait for all moving parts to stop.
- Before mowing, always inspect the machine to ensure that the blades, blade bolts, and cutting assemblies are in good working condition.
- This product generates an electromagnetic field. If you wear an implantable electronic medical device, consult your health care professional before using this product.
- Use only accessories and attachments approved by Exmark.
- Do not carry passengers on the machine and keep bystanders and pets away from the machine during operation.
- This machine may produce a sound power level that exceeds 85 dBA at the operator's ear when accessories are installed. This can cause hearing loss through extended periods of exposure. Wear hearing protection when operating this machine with accessories installed.
- Before operating the machine, ensure that the operator presence controls and either the discharge deflector or the entire grass collection system are in place and working properly. Otherwise, do not operate the machine.
- When you shut off the machine, the blades should stop. If not, stop using the machine immediately and contact an Authorized Service Dealer.
- Shut off the machine and attachment(s) if anyone enters the area.

Performing Daily Maintenance

Before starting the machine each day, perform the Each Use/Daily procedures listed in the Maintenance Schedule.

Safety-Interlock System

⚠ WARNING ⚠

If the safety-interlock switches are disconnected or damaged, the machine could operate unexpectedly, causing personal injury.

- **Do not tamper with the interlock switches.**
- **Check the operation of the interlock switches daily and replace any damaged switches before operating the machine.**

The safety-interlock system prevents the PTO from engaging unless you do the following:

- Move either motion-control lever down to the center, unlocked position.
- Press the ON position on the PTO switch.

The safety-interlock system also disengages the PTO if you move or release both motion-control levers into the PARK position.

Symbols display on the InfoCenter to notify the user when each interlock component is in the correct position.

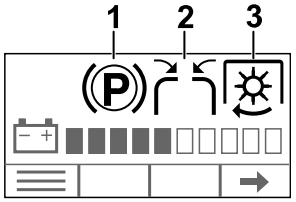

(1) The parking brake is engaged.

(2) One or both control levers are down in the center, unlocked position.

(3) The PTO is engaged.

Testing the Safety-Interlock System

Test the safety-interlock system before you use the machine each time. If the safety system does not operate as described below, have an Authorized Service Dealer repair the safety system immediately.

1. Start the machine.
2. With both motion-control levers outward in the PARK position, press the ON position on the PTO switch.

   Note: The mower blades should not engage.

Safety-Interlock System (continued)

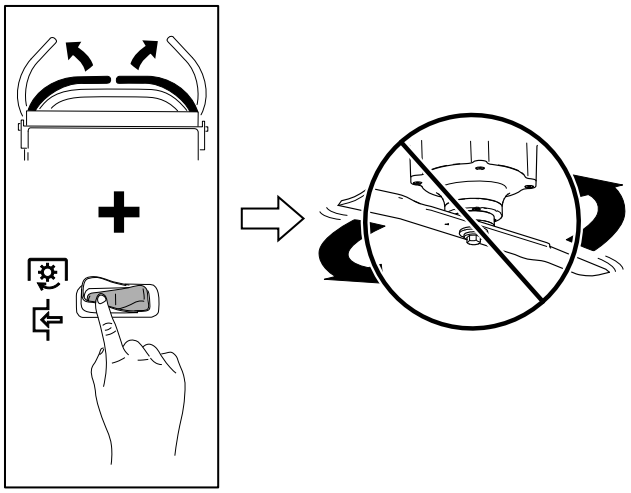

G487411

3. Move 1 lever down to the center, unlocked position and press the ON position on the PTO switch.

   Note: The mower blades should engage.

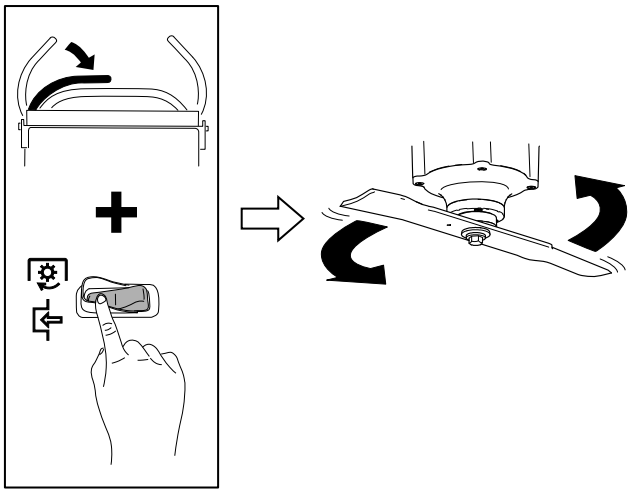

G487412

4. Release the lever to the PARK position.

   Note: The blades should stop.

Safety-Interlock System (continued)

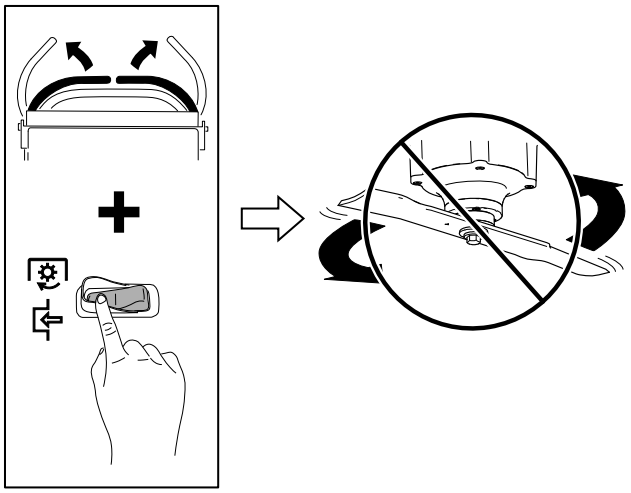

G487414

5. Move 1 lever down to the center, unlocked position and press the ON position on the PTO switch.

   Note: The mower blades should engage.

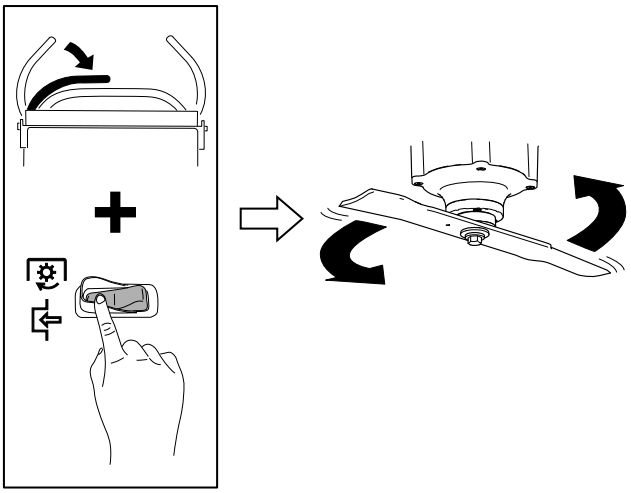

G487415

6. Press the OFF position on the PTO switch.

   Note: The blades should stop.

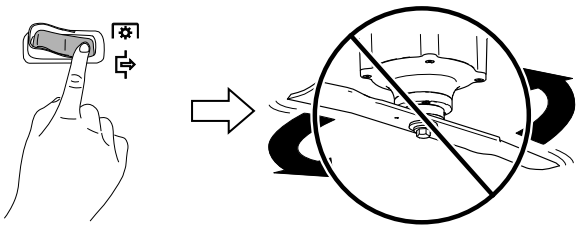

G487416

During Operation

During Operation Safety

- Wet grass or leaves can cause serious injury if you slip and contact the blade. Avoid mowing in wet conditions.
- Before you start the machine, ensure that all drives are in neutral.
- Keep away from holes, ruts, bumps, rocks, and other hidden hazards. Use care when approaching blind corners, shrubs, trees, tall grass or other objects that may hide obstacles or obscure vision. Uneven terrain could overturn the machine or cause you to lose your balance or footing.
- Shut off the machine and disengage the drive to the cutting unit after striking a foreign object or if an abnormal vibration occurs. Inspect the cutting unit for damage and make repairs before starting and operating the machine.
- Be alert, slow down, and use caution when making turns and crossing roads and sidewalks with the machine. Always yield the right-of-way.
- Do not use the machine as a towing vehicle.
- Never raise the mower deck with the blades running.
- Be aware of the mower discharge path and direct discharge away from others. Avoid discharging material against a wall or obstruction as the material may ricochet back toward the operator. Stop the blades, slow down, and use caution when crossing surfaces other than grass and when transporting the mower.
- Do not leave a running machine unattended.
- Be alert and shut off the machine if children enter the area.

Slope Safety

- Slopes are a major factor related to loss of control and rollover accidents, which can result in severe injury or death. You are responsible for safe slope operation. Operating the machine on any slope requires extra caution. Before using the machine on a slope, do the following:
  - Review and understand the slope instructions in the manual and on the machine.
  - Evaluate the site conditions of the day to determine if the slope is safe for machine operation. Use common sense and good judgment when performing this evaluation. Changes in the terrain, such as moisture, can quickly affect the operation of the machine on a slope.
- Operate across slopes, never up and down. Avoid operation on excessively steep or wet slopes.
- Identify hazards at the base of the slope. Do not operate the machine near drop-offs, ditches, embankments, water, or other hazards. The machine could suddenly roll over if a wheel goes over the edge or the edge collapses. Keep a safe distance (twice the width of the machine) between the machine and any hazard. Use a walk-behind machine or a handheld tool to operate in these areas.
- Avoid starting, stopping, or turning the machine on slopes. Avoid making sudden changes in speed or direction; turn slowly and gradually.

During Operation Safety (continued)

- Do not operate a machine under any conditions where traction, steering or stability is in question. Be aware that operating the machine on wet grass, across slopes or downhill may cause the machine to lose traction. Loss of traction to the drive wheels may result in sliding and a loss of braking and steering. The machine can slide even if the drive wheels are stopped.
- Remove or mark obstacles such as ditches, holes, ruts, bumps, rocks or other hidden hazards. Tall grass can hide obstacles. Uneven terrain could overturn the machine.
- Use extra care while operating with accessories or attachments. These can change the stability of the machine and cause a loss of control. Follow directions for counterweights.
- If you lose control of the machine, step away from the direction of travel of the machine.

Starting the Machine

1. Stand on the platform.
2. Turn the key switch to the ON position.

Shutting Off the Machine

⚠ CAUTION ⚠

Children or bystanders may be injured if they move or attempt to operate the machine while it is unattended.

Always remove the key and engage the parking brake when leaving the machine unattended.

---

1. Park the machine on a level surface.
2. Disengage the blade-control switch (PTO).
3. Move the motion-control levers outward to the PARK position.

   Note: The electric brake will engage automatically.
4. Turn the key switch to the OFF position and remove the key.

Operating the Mower Blade-Control Switch (PTO)

Use the blade-control switch (PTO) in conjunction with the motion-control levers to engage and disengage the mower blades.

⚠ DANGER ⚠

The rotating blades under the mower deck are dangerous. Blade contact will cause serious injury or death.

Do not put your hands or feet under the mower or mower deck when the blades are engaged.

⚠ DANGER ⚠

An uncovered discharge opening allows objects to be thrown toward you or bystanders. Also, contact with the blade could occur. Thrown objects or blade contact will cause serious injury or death.

Do not operate the mower with the discharge deflector raised, removed, or altered unless a grass collection system or mulch kit is in place and working properly.

---

1. Engage the blade-control switch (PTO).

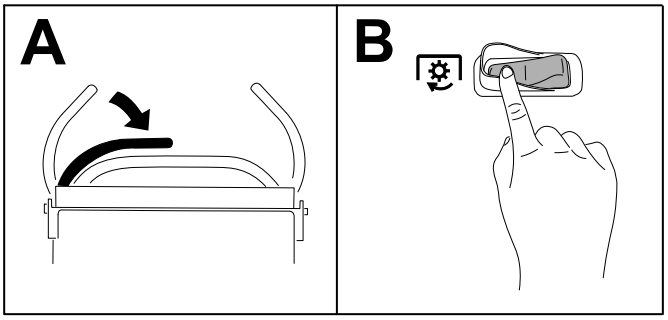

G487432

2. Mow as desired.
3. Disengage the blade-control switch using 1 of 2 ways shown.

   Note: If you disengage the mower blades by releasing the motion-control levers, you do not need to move the blade-control switch to the OFF position before engaging the blades again.

Operating the Mower Blade-Control Switch (PTO) (continued)

Option 1

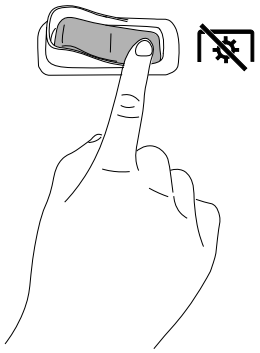

G487433

Option 2

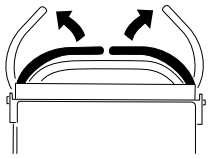

G487436

Side Discharge

The hinged grass deflector disperses clippings to the side and down toward the turf.

⚠ DANGER ⚠

Without the grass deflector, discharge cover, or complete grass catcher assembly mounted in place, you and bystanders are exposed to blade contact and thrown debris. Contact with rotating mower blade(s) and thrown debris will cause injury or death.

- **Do not remove the grass deflector from the machine, because the grass deflector routes material down toward the turf. If the grass deflector is ever damaged, replace it immediately.**
- **Never put your hands or feet under the mower.**
- **Never try to clear the discharge area or mower blades unless the power takeoff (PTO) is off. Rotate the key to the OFF position and remove the key.**

Platform Overview

You can use the machine with the platform in the up or down position. It is your preference on which position to use.

⚠ WARNING ⚠

The operator platform is heavy and may cause injury when you raise or lower it. Carefully lower or raise the operator platform, as suddenly dropping it could injure you.

- **Do not put your hands or fingers in the platform-pivot area when lowering or raising the operator platform.**
- **Make sure that the platform is supported when you pull the latch pin out.**
- **Make sure that the latch secures the platform when folding it up. Push it tight against the cushion for the latch pin to lock into place.**
- **Keep bystanders away from the machine when raising or lowering the platform.**

Operate the machine with the platform up for the following conditions:

- Near drop-offs
- In small areas where the machine is too large
- In areas with low-hanging branches or obstacles
- Loading the machine for transport
- Driving up slopes

Operate the machine with the platform down for the following conditions:

- Using the machine in most areas
- Driving across slopes
- Driving down slopes

To raise the platform, pull out the knob and lift the platform. Push the platform tight against the cushion for the latch pin to lock it into place.

To lower the platform, push the platform forward against the cushion to release pressure on the latch pin, then pull the knob out and lower the platform.

Platform Overview (continued)

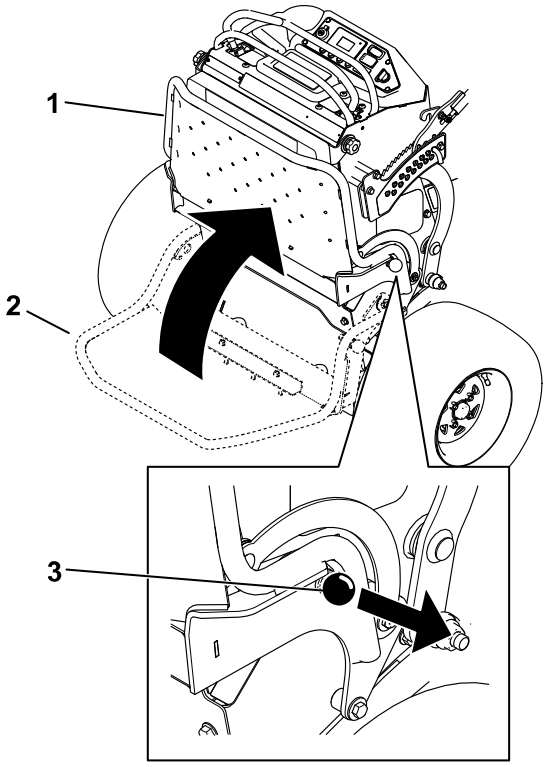

g374767S

(1) Platform up

(2) Platform down

(3) Pull the knob out to release the platform.

IMPORTANT

Back the machine over curbs with 1 wheel at a time; driving it forward over curbs could damage the machine.

⚠ CAUTION ⚠

Positioning a lever too far in front of the other causes the machine to spin very rapidly. As a result, you may lose control of the machine, causing personal injury to you and damage to the machine.

Slow down the machine before making sharp turns.

1. Move the motion-control levers down to the center, unlocked position.

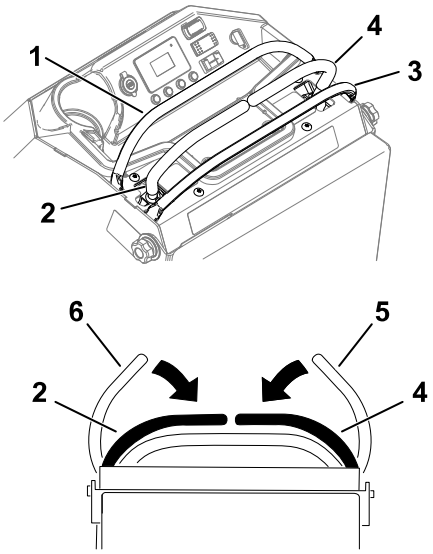

G496877

(1) Front reference bar
(2) Left control lever
(3) Rear reference bar
(4) Right control lever
(5) Right control lever in the PARK position
(6) Left control lever in the PARK position

2. Slowly push the motion-control levers forward or rearward. Move 1 lever farther than the other lever to turn.

   Note: The farther you move the motion-control levers, the faster the machine moves in that direction.

3. To stop, pull the motion-control levers back to the NEUTRAL position.

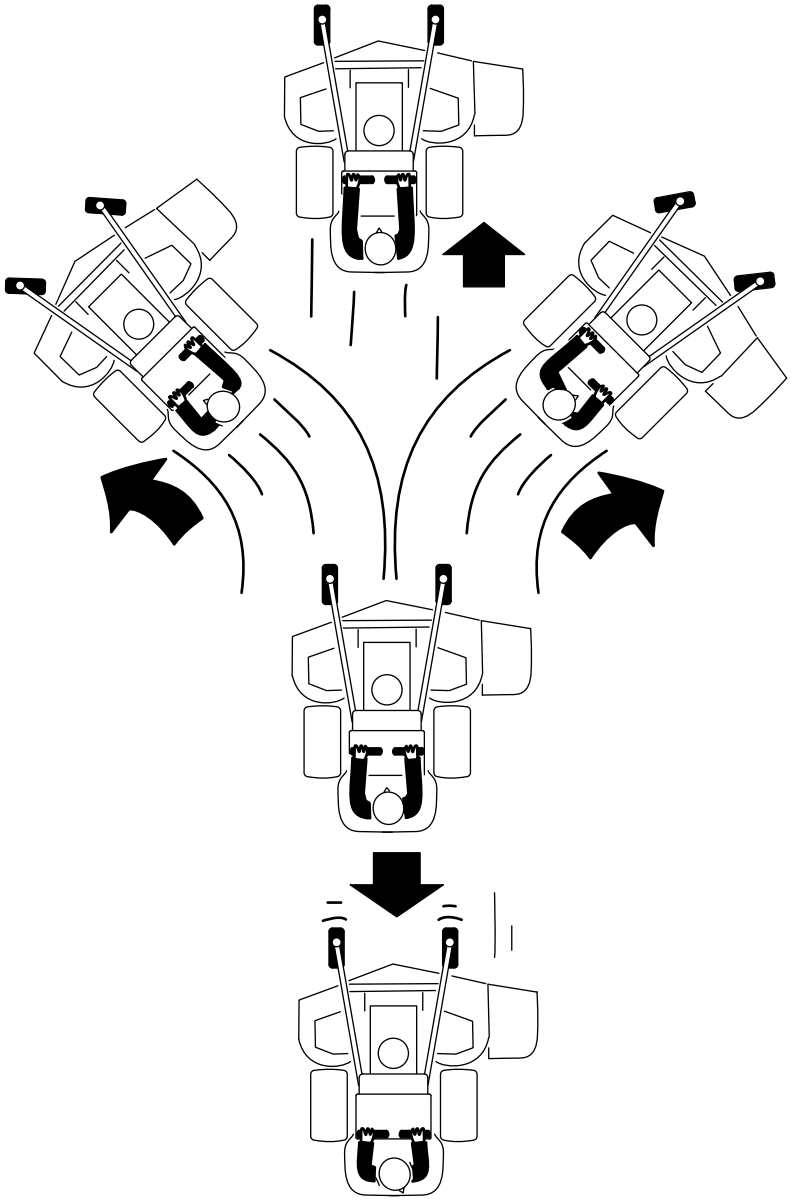

G506436

Adjusting the Height of Cut

Adjust the height of cut as shown.

Note: The height of cut can be adjusted from 38 to 127 mm (1-1/2 to 5 inches) in 6 mm (1/4 inch) increments.

Adjusting the Height of Cut (continued)

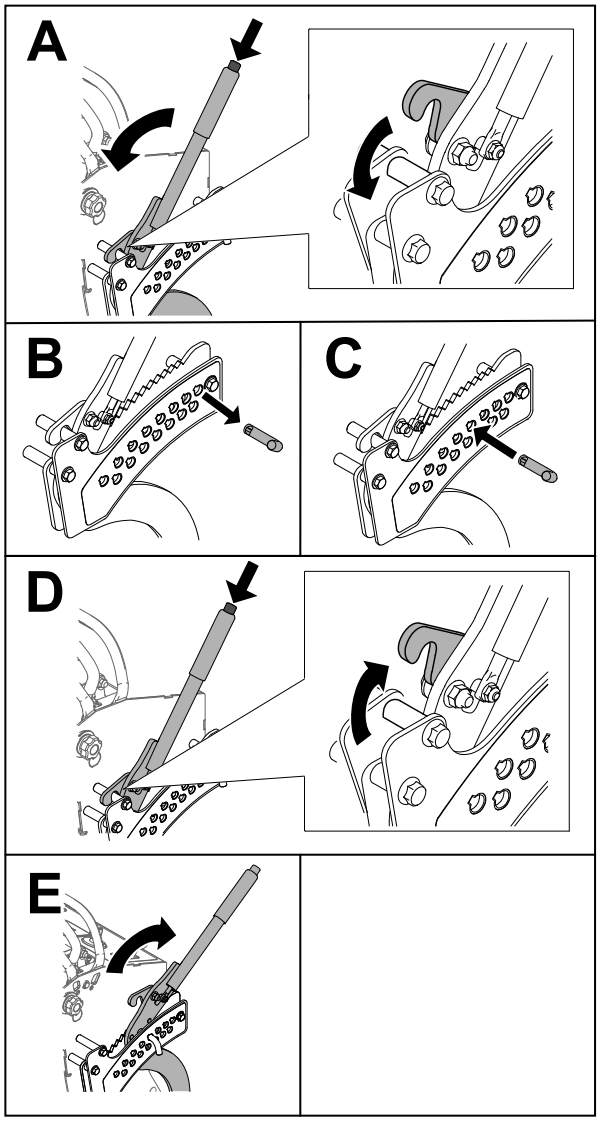

g330789S

Adjusting the Rake of the Mower Deck

Note: The rear of the mower deck can be raised in 6.3 mm (1/4 inch) increments, up to 31.8 mm (1-1/2 inches).

1. Disengage the PTO and move the motion-control levers outward to the PARK position.
2. Shut off the machine, remove the key, and wait for all moving parts to stop before leaving the operating position.
3. Raise the height-of-cut lever and lock it into the transport position.
4. On the left or right side of the machine, raise the lever and remove the pin.

Adjusting the Rake of the Mower Deck (continued)

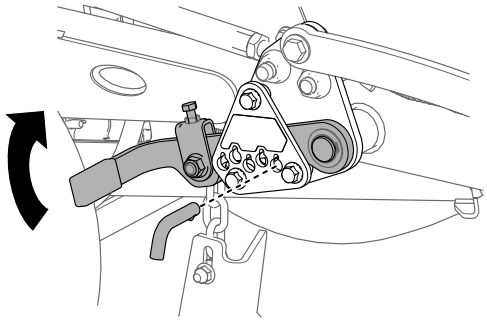

g377014S

5. Install the pin at the desired position.

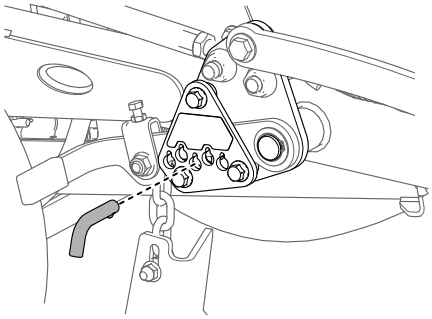

g377012S

6. Repeat the procedure for the other side of the machine.

Weights

- Install weights to improve balance. You can add or remove weights to create optimized performance under different operating conditions and for your preference.
- Add or remove a single weight at a time until you achieve the desired handling and balance.
- Refer to the *Operator's Manual* of attachments for recommended weights.

Note: Contact an Authorized Service Dealer to order a weight kit.

Battery-System Charge Level

Refer to the main information screen on the InfoCenter display to determine the battery-system charge level.

- **Low battery:** When the battery level reaches a low percentage, a low-battery advisory appears on the InfoCenter display.

  Finish mowing, then transport the machine to a designated battery-charging area and charge the batteries.

Battery-System Charge Level (continued)

- **Limp mode:** If the battery level drops below the set limp-mode battery percentage, an advisory appears on the InfoCenter display, and the mower blades will disengage and cannot be engaged.

  Transport your machine to a designated battery-charging area and charge the batteries.
- **Ultra-limp mode:** If the battery level becomes too low during limp mode, an advisory appears on the InfoCenter display and traction speed automatically decreases.

  Transport your machine to a designated battery-charging area and charge the batteries.

Adjusting the Battery Percentage for Limp Mode

1. Park the machine on a level surface, disengage the PTO, and move the motion-control levers outward to the PARK position.
2. In the **Main menu**, scroll down to **Service** and press the → button.

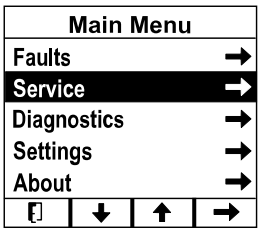

g376300S

3. In the **Service** menu, scroll down to **Limp Mode** and adjust the percentage using the **–** and **+** buttons.

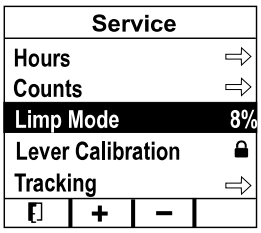

g430868S

After Operation

After Operation Safety

- Disengage the PTO whenever you are transporting or not using the machine.
- Use full-width ramps for loading the machine into a trailer or truck.
- Tie the machine down securely using straps, chains, cable, or ropes. Both front and rear straps should be directed down and outward from the machine.
- Replace all worn, damaged, or missing parts and decals. Keep all fasteners tight to ensure that the machine is working properly.

Battery and Charger Safety

General

⚠ WARNING ⚠

Risk of fire and electric shock—The batteries have no user-serviceable parts.

- Confirm the voltage that is available in your country before using the charger.
- Do not get the charger wet; keep it protected from rain and snow.
- A risk of fire, electric shock, or injury may result from using an accessory not recommended or sold by Exmark.
- To reduce risk of a battery explosion, follow these instructions and the instructions for any equipment that you intend to use near the charger.
- Batteries could emit explosive gasses if they are significantly overcharged.
- Refer to an Authorized Service Dealer to service or replace a battery.

Training

- Never allow children or untrained people to operate or service the charger. Local regulations may restrict the age of the operator. The owner is responsible for training all operators and mechanics.
- Read, understand, and follow all instructions on the charger and in the manual before operating the charger. Be familiar with the proper use of the charger.

Preparation

- Keep bystanders and children away while charging.
- Wear appropriate clothing while charging, including eye protection; long pants; and substantial, slip-resistant footwear.
- Shut off the machine and wait until the machine has completely powered down before charging. Failure to do this may cause arcing.
- Ensure that the area is well ventilated while charging.
- The charger is for use on only nominal 120 to 240 VAC operation. For use with 240 V circuits, contact your Authorized Service Dealer for the correct power cord.

Operation

- Do not charge a frozen battery.
- Do not abuse the cord. Do not carry the charger by the cord or yank on the power supply cord to disconnect the charger from the receptacle. Keep the cord from heat, oil, and sharp edges.
- Connect the charger directly to a grounding receptacle. Do not use the charger on an ungrounded outlet, even with a grounding adapter.

Battery and Charger Safety (continued)

- Do not alter the provided power cord or plug.
- Remove metal items such as rings, bracelets, necklaces, and watches when working with a lithium-ion battery. A lithium-ion battery can produce enough current to cause a severe burn.
- Never operate the charger without good visibility or light.
- Use an extension cord capable of handling 15 A or more. If you are charging outdoors, use an extension cord rated for outdoor use.
- If the power supply cord is damaged while it is plugged in, disconnect the cord from the wall receptacle and contact an Authorized Service Dealer for a replacement.
- Unplug the charger from the electrical outlet when not in use, before moving it to another location, or prior to servicing it.

Maintenance and Storage

- Store the charger indoors in a dry, secure place that is out of the reach of unauthorized users.
- Do not disassemble the charger. Take the charger to an Authorized Service Dealer when service or repair is required.
- Unplug the power cord from the outlet before starting any maintenance or cleaning to reduce risk of electric shock.
- Maintain or replace safety and instruction labels as needed.
- Do not operate the charger with a damaged cord or plug. Contact an Authorized Service Dealer to obtain a replacement cord.
- If the charger has received an impact, been dropped, or otherwise damaged, do not use it; take it to an Authorized Service Dealer.

Hauling the Machine

Use a heavy-duty trailer or truck to haul the machine. Use a full-width ramp. Ensure that the trailer or truck has all the necessary brakes, lighting, and marking as required by law. Please carefully read all the safety instructions. Knowing this information could help you or bystanders avoid injury. Refer to your local ordinances for trailer and tie-down requirements.

⚠ WARNING ⚠

Driving on the street or roadway without turn signals, lights, reflective markings, or a slow-moving-vehicle emblem is dangerous and can lead to accidents causing personal injury.

Do not drive the machine on a public street or roadway.

Hauling the Machine (continued)

Trailer Requirements

⚠ WARNING ⚠

Loading a machine onto a trailer or truck increases the possibility of backward tip-over and could cause serious injury or death.

- **Use only full-width ramps; do not use individual ramps for each side of the machine.**
- **Ensure that the length of ramp is at least 4 times as long as the height of the trailer or truck bed to the ground.**
- **Use extreme caution when operating a machine on a ramp.**
- **Back the machine up the ramp and walk it forward down the ramp.**
- **Avoid sudden acceleration or deceleration while driving the machine on a ramp as this could cause a loss of control or a tip-over situation.**

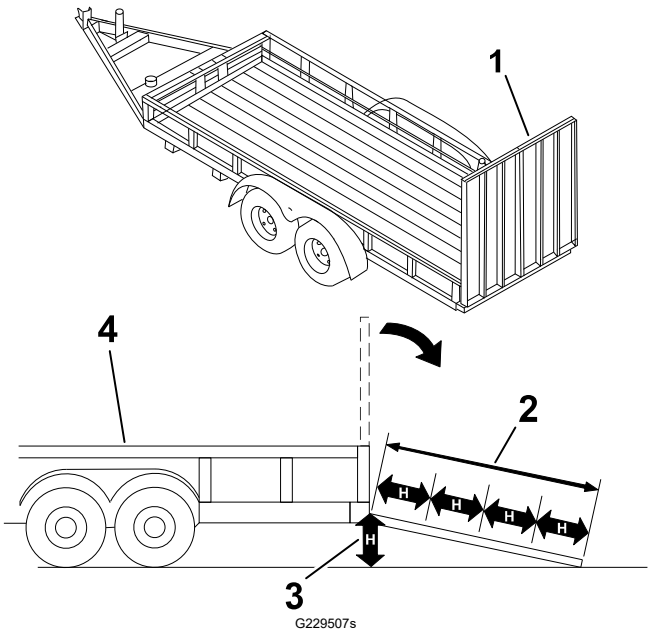

(1) Full-width ramp in stowed position

(2) Ramp is at least 4 times as long as the height of the trailer or truck bed to the ground

(3) H = height of the trailer or truck bed to the ground

(4) Trailer

Loading the Machine

1. If using a trailer, connect it to the towing vehicle and connect the safety chains.
2. If applicable, connect the trailer brakes and lights.
3. Lower the ramp.
4. Raise the platform.

Hauling the Machine (continued)

IMPORTANT

Always keep the platform up when loading and unloading the machine.

5. Back the machine up the ramp as shown.

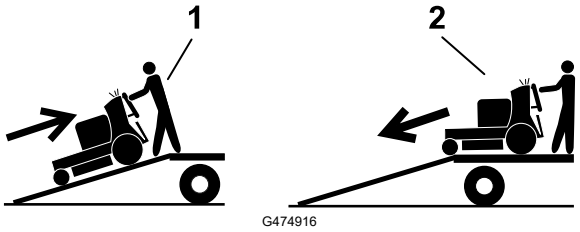

G474916

(1) Back the machine up the ramp.

(2) Walk the machine down the ramp.

6. Shut off the machine and remove the key.
7. Tie down the machine near the front caster wheels, or front frame holes, and the rear bumper holes with straps, chains, cable, or ropes as shown. Refer to local regulations for tie-down requirements.

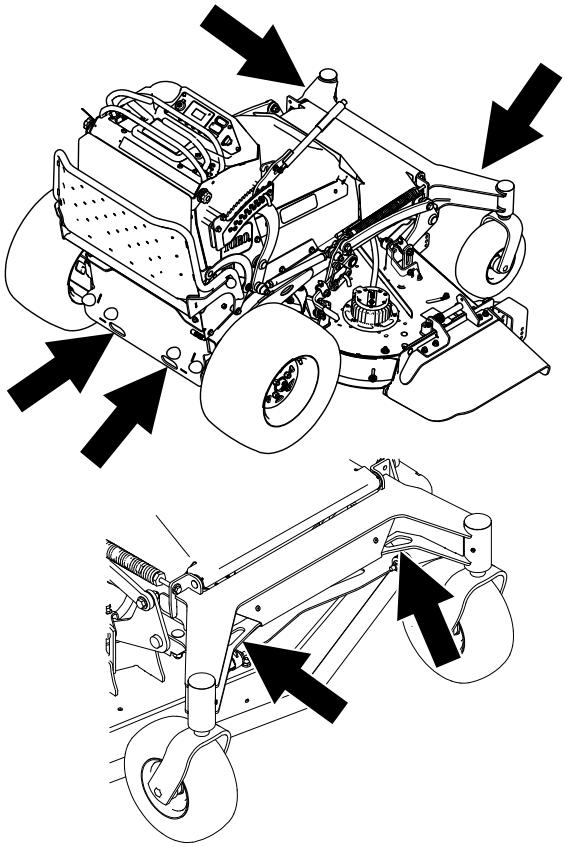

G474932

Lithium-Ion Battery Transportation

The US Department of Transportation and international transportation authorities require that lithium-ion batteries be transported using special packaging and only be transported by carriers certified to haul them. In the US, you are allowed to transport a battery when it is

Hauling the Machine (continued)

installed on the machine as battery powered equipment, with some regulatory requirements. Contact the US Department of Transportation or the appropriate government body in your country for detailed regulations on transportation of your batteries or the machine with the batteries equipped.

For detailed information on shipping a battery, contact your Authorized Service Dealer.

Lithium-Ion Battery Charger

Refer to the figure below for an overview of the battery-charger cords.

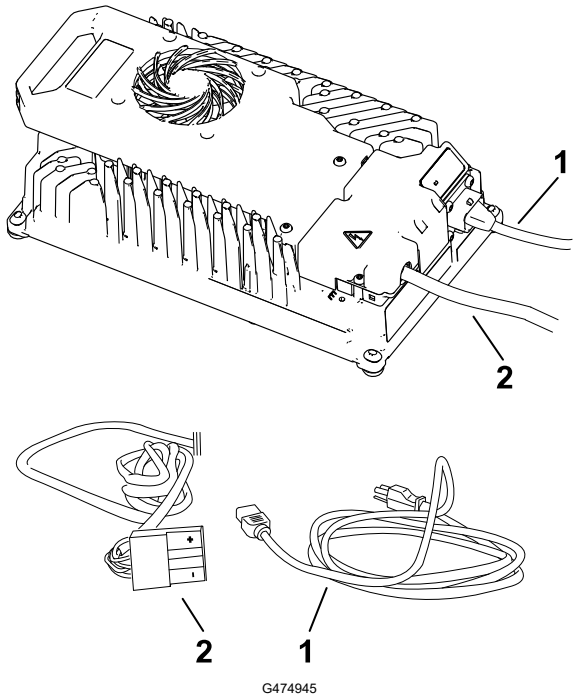

(1) Power-supply cord

(2) Output connector and cord

Connecting to a Power Source

⚠ DANGER ⚠

Contact with water while charging the machine could cause electric shock, causing injury or death.

- **Do not handle the plug or the charger with wet hands or while standing in water.**
- **Do not charge the batteries in the rain or in wet conditions.**

To reduce the risk of electric shock, this charger has a 3-prong grounded plug (type B). If the plug does not fit into the wall receptacle, other grounded plug types are available; contact an Authorized Service Dealer.

Do not change the charger or the power-supply-cord plug in any way.

Lithium-Ion Battery Charger (continued)

IMPORTANT

Check the power supply cord periodically for holes or cracks in the insulation. Do not use a damaged cord. Do not run the cord through standing water or wet grass.

1. Insert the charger plug on the power-supply cord into the matching input power socket on the charger.

⚠ WARNING ⚠

A damaged charger cord can cause an electrical shock or a fire.

Thoroughly inspect the power supply cord before using the charger. If the cord is damaged, do not operate the charger until you obtain a replacement.

2. Insert the wall plug end of the power supply cord into a grounded electrical outlet.

Charging the Lithium-Ion Batteries

⚠ CAUTION ⚠

Attempting to charge the batteries with a charger not provided by Exmark can result in excessive heat and other related product malfunctions, which can lead to property damage and/or injury.

Use the Exmark-provided chargers to charge the batteries.

Recommended temperature range for charging: 0° to 45°C (32° to 113°F)

IMPORTANT

Charge the batteries only in temperatures that are within the recommended range.

Note: The charger will not function in temperatures exceeding the minimum or maximum temperatures.

1. Park the machine in the designated location for charging.
2. Shut off the machine and remove the key.
3. Ensure that the connectors are free of dust and debris.
4. Slide the charger-output connector into the charger connector on the machine.

Lithium-Ion Battery Charger (continued)

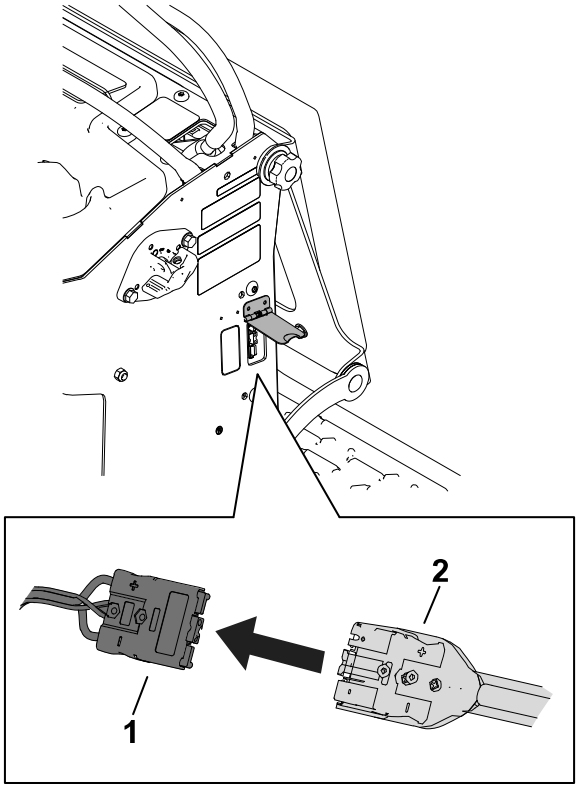

G482830

(1) Machine connector

(2) Charger connector

5. Connect the charger power cord to a power source.
6. Observe the InfoCenter display to ensure that the batteries are charging.

   Note: The InfoCenter display shows the battery charge percentage and amperage.

   Batteries with a lower voltage charge first; once they reach the voltage of the other batteries, all batteries charge simultaneously.

   When charging is complete, the machine InfoCenter displays 10 solid bars.

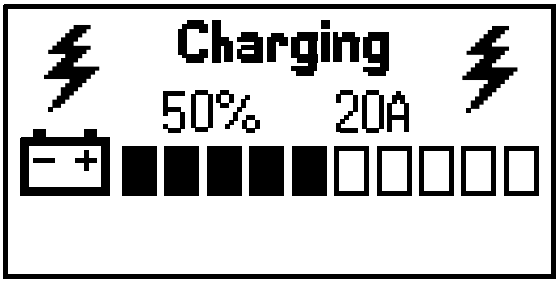

G474956

7. When the machine reaches a sufficient level, disconnect the charger connector from the machine connector.
8. Place the charger connector and cord in a storage position that avoids damage.
9. Start the machine.
10. Verify the charge level using the InfoCenter display.

Maintenance Safety

⚠ WARNING ⚠

Modifying the original machine, parts, and/or accessories may alter the warranty, controllability, and safety of the machine. Making unauthorized modifications to the original machine and/or not using genuine Exmark parts could lead to serious injury or death.

- **Do not make unauthorized modifications to the machine, parts, and/or accessories.**
- **Use only genuine Exmark parts.**

- Before adjusting, cleaning, servicing, or leaving the machine, do the following:
  - Park the machine on a level surface.
  - Disengage the drives and the power take-off.
  - Engage the parking brake.
  - Shut off the machine and remove the key.
  - Wait for all moving parts to stop.
  - Allow machine components to cool.
- Carefully release pressure from components with stored energy.
- Check the parking brake operation frequently. Service the brake as needed.
- Never tamper with safety devices. Check their proper operation regularly.
- Do not rely solely on mechanical or hydraulic jacks to support the machine; support the machine with jack stands whenever you raise the machine.
- Use care when checking the blades. Wrap the blades or wear gloves, and use caution when servicing the blades. Only replace or sharpen the blades; never straighten or weld them.
- On multi-bladed machines, take care as rotating one blade can cause other blades to rotate.
- Keep your hands and feet away from hot surfaces.
- Keep all hardware tightened, especially the blade-attachment hardware.

Recommended Maintenance Schedule

Maintenance Service Interval	Maintenance Procedure
After the first 50 hours	Change the transmission fluid.
After the first 100 hours	Check the wheel-lug nuts.
Before each use or daily	Test the safety-interlock system.
	Inspect the blades.
	Clean under the mower deck.
Every 50 hours or Monthly	Check the tire pressure.
Every 500 hours	Change the transmission fluid.
Every 500 hours or Yearly	Adjust the caster-pivot bearing.
Yearly	Access internal components.
	Grease the front caster pivots.
	Grease the caster-wheel hubs.
Before storage	Preparing the machine for storage over 30 days.

Pre-Maintenance Procedures

Accessing Internal Components

The cushion can be released to access the rear of the machine for maintenance or adjustment.

1. Lower the platform.
2. Loosen the twist knobs on each side of the machine.

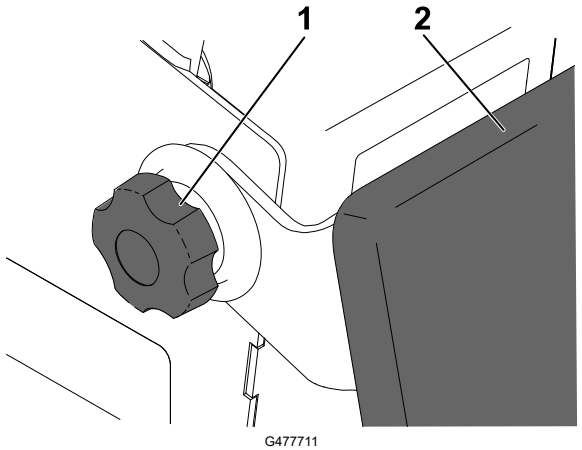

(1) Twist knob

(2) Cushion

3. Lower the cushion to the platform.

Accessing Internal Components (continued)

4. Remove the rear access cover.

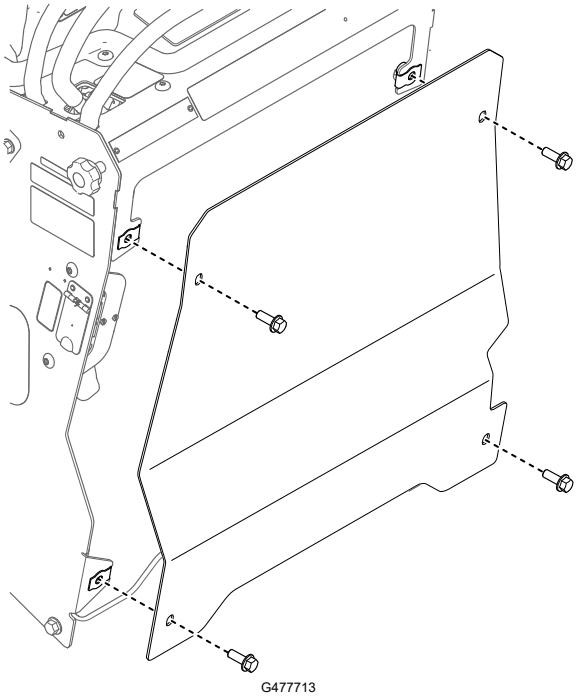

5. Perform any maintenance or adjustment on the machine.
6. Install the rear access cover.
7. Raise the cushion and slide it onto the pins on both sides of the machine.
8. Tighten the twist knobs.

Moving a Non-Functioning Machine

IMPORTANT

Do not tow the machine without first disengaging the transmission, otherwise you could damage motor components.

⚠ CAUTION ⚠

The machine does not have brakes when the transmission is disengaged. It will roll uncontrolled, possibly causing injury.

If you must tow the machine, install the Tow Bar Assembly Kit to prevent the machine from colliding with the towing vehicle. Contact your Authorized Service Dealer to obtain the kit.

1. Disengage the PTO and move the motion-control levers outward to the PARK position.

Moving a Non-Functioning Machine (continued)

2. Shut off the machine, remove the key, and wait for all moving parts to stop before leaving the operating position.
3. Remove the cap from the motor.

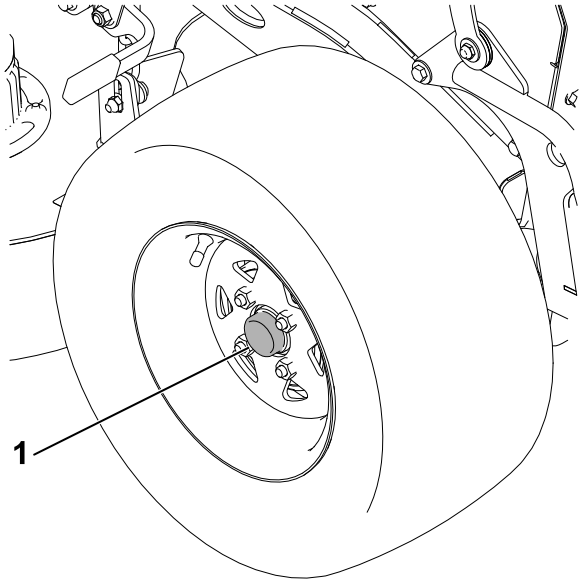

G482831

(1) Motor cap

4. Insert a ratchet with a 3/8 inch drive into the square hole in the motor hub. Rotate it counterclockwise until it stops (approximately 4 full rotations) to disengage the transmission. Torque to **41 to 68 N·m (30 to 50 ft-lb)**.

   Note: The wheel will spin freely.

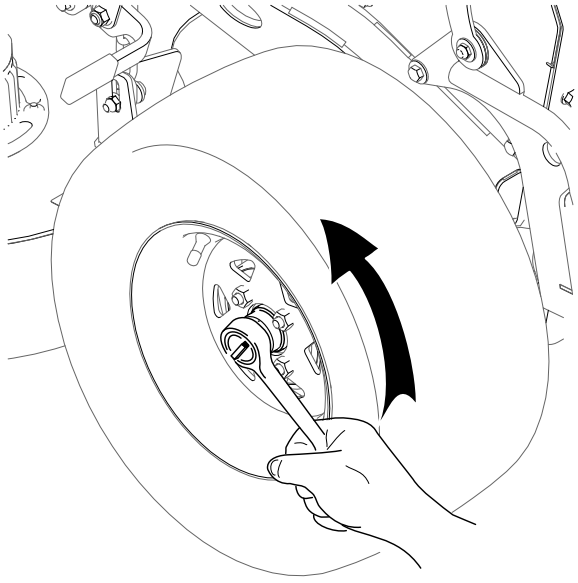

G482832

5. Repeat for the other motor.
6. Move the machine to the desired location.

Moving a Non-Functioning Machine (continued)

IMPORTANT

Do not move the machine faster than 8 km/h (5 mph).

7. Immediately after moving the machine, engage the transmission for operation.
   A. Insert a ratchet with a 3/8 inch drive into the square hole in the motor hub.
   B. Rotate it clockwise until it stops (approximately 4 full rotations).



   C. Torque to **41 to 68 N·m (30 to 50 ft-lb)**.

Lubrication

Greasing the Machine

Grease with No. 2 lithium or molybdenum grease.

1. Disengage the blade-control switch (PTO) and move the motion-control levers outward to the PARK position.
2. Shut off the machine, remove the key, and wait for all moving parts to stop before leaving the operating position.
3. Clean the grease fittings with a rag.

   Note: Make sure to scrape any paint off the front of the fitting(s).
4. Connect a grease gun to the fitting.
5. Pump grease into the fittings until grease begins to ooze out of the bearings.
6. Wipe up any excess grease.

Greasing the Front Caster Pivots

Grease type: Lithium or molybdenum grease.

1. Remove the dust cap and adjust the caster pivots.

   Note: Keep the dust cap off until you have finished greasing the caster pivots.
2. Remove the hex plug.
3. Thread a grease fitting (1/4 inch–28 taper thread) into the hole.
4. Pump grease into the fitting until it oozes out around the top bearing.
5. Remove the grease fitting from the hole.
6. Install the hex plug and dust cap.

Greasing the Caster-Wheel Hubs

Grease type: Lithium or molybdenum grease

Greasing the Caster-Wheel Hubs (continued)

1. Park the machine on a level surface, disengage the PTO, and move the motion-control levers outward to the PARK position.
2. Shut off the machine, remove the key, and wait for all moving parts to stop before leaving the operating position.
3. Remove the caster wheel from the caster forks.
4. Remove the seal guards from the wheel hub.

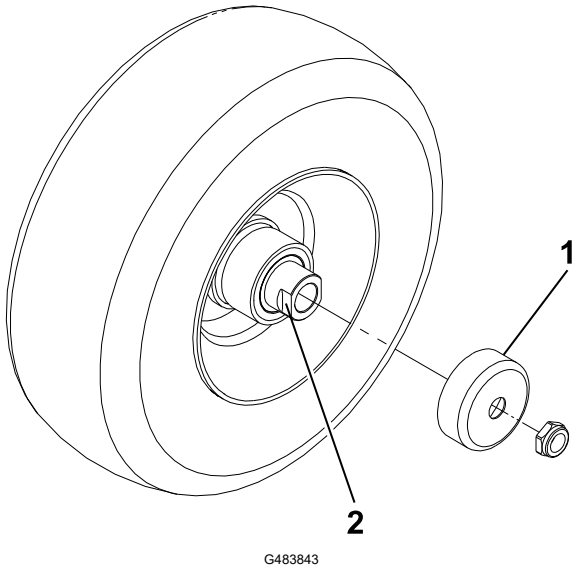

G483843

(1) Seal guard

(2) Spacer nut with wrench flats

5. Remove 1 spacer nut from the axle assembly in the caster wheel.

   Note: Thread-locking adhesive has been applied to lock the spacer nuts to the axle.
6. Remove the axle with the other spacer nut still assembled to it from the wheel assembly.
7. Pry out the seals, inspect bearings for wear or damage, and replace them if necessary.
8. Pack the bearings with a general-purpose grease.
9. Insert 1 bearing and 1 new seal into the wheel.

   Note: You must replace the seals.
10. If both spacer nuts in the axle assembly have been removed (or broken loose), apply thread-locking adhesive to 1 spacer nut, threading it onto the axle with the wrench flats facing outward.

    Note: Do not thread the spacer nut all of the way onto the end of the axle. Leave approximately 3 mm (1/8 inch) from the outer surface of the spacer nut to the end of the axle inside the nut.
11. Insert the assembled nut and axle into the wheel on the side of the wheel with the new seal and bearing.
12. With the open end of the wheel facing up, fill the area inside the wheel around the axle full of general-purpose grease.
13. Insert the second bearing and the new seal into the wheel.

Greasing the Caster-Wheel Hubs (continued)

14. Apply thread-locking adhesive to the second spacer nut, threading it onto the axle with the wrench flats facing outward.



15. Torque the nut to **8 to 9 N·m (71 to 80 in-lb)**, loosen it, then torque it to **2 to 3 N·m (20 to 25 in-lb)**.

    Note: Make sure that the axle does not extend beyond either nut.

16. Install the seal guards over the wheel hub and insert the wheel into the caster fork.
17. Install the caster bolt and tighten the nut fully.

IMPORTANT

To prevent seal and bearing damage, check the bearing adjustment often by spinning the caster wheel. The wheel should not spin freely (more than 1 or 2 revolutions) or have any side play. If the wheel spins freely, adjust the torque on the spacer nut until there is a slight amount of drag, then apply thread-locking adhesive.

Electrical System Maintenance

Using the Battery-Disconnect Switch

1. Park the machine on a level surface, disengage the PTO, and move the motion-control levers outward to the PARK position.
2. Shut off the machine, remove the key, and wait for all moving parts to stop before leaving the operating position.
3. Unplug the battery charger if it is connected.
4. Turn the battery-disconnect switch to the ON or OFF position.

Using the Battery-Disconnect Switch (continued)

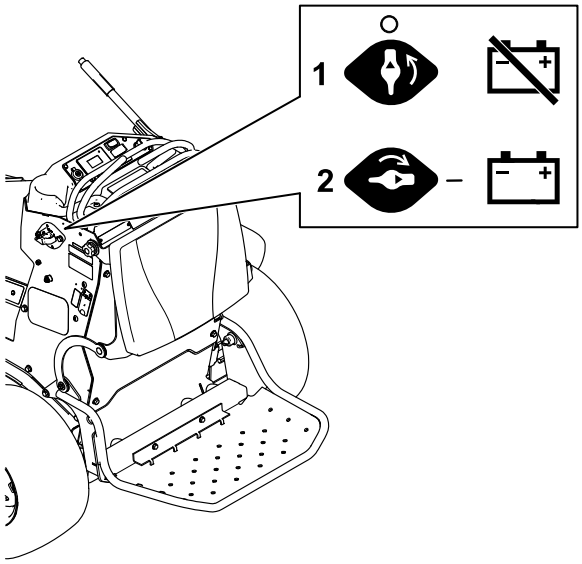

G483845

(1) OFF position

(2) ON position

Battery Service

Note: The machine is equipped with 8 lithium-ion batteries.

A lithium-ion battery must be disposed of or recycled in accordance with local and federal regulations. If a battery requires service, contact your Authorized Service Dealer for assistance.

Do not open the battery. If you are having problems with a battery, contact your Authorized Service Dealer for assistance.

Lithium-Ion Battery Maintenance

⚠ WARNING ⚠

The batteries contain high voltage, which could burn or shock you.

- **Do not attempt to open the batteries.**
- **Use extreme care when handling a battery with a cracked case.**
- **Use only the charger designed for the batteries.**

The lithium-ion batteries hold a sufficient charge to perform intended work during its life span.

To achieve maximum life and use from your batteries, follow these guidelines:

- Do not open the battery.

Lithium-Ion Battery Maintenance (continued)

- Store/park the machine in a clean, dry garage or storage area, away from direct sunlight, heat sources, rain, and wet conditions. Do not store it in a location where the temperature exceeds the range specified in Battery Storage Requirements. Temperatures outside of this range will damage your batteries. High temperatures during storage, especially at a high state of charge, reduces the life of the batteries.
- When storing the machine for more than 10 days, ensure that the machine is in a cool and dry location, out of sunlight, rain, and wet conditions.
- If you are mowing in hot conditions or in strong, direct sunlight, the battery may overheat. If this happens, a high-temperature alert will appear on the InfoCenter display, the cutting units will disengage, and the machine will slow down. Immediately drive the machine to a cool location out of the sun, turn off the machine, and allow the batteries to cool fully before resuming operation.
- Maintain the sharpness of the mower blades. A dull blade increases power consumption and reduces the amount of work that the machine performs on each charge.
- Use lights only when it is necessary.

Battery Charger Maintenance

IMPORTANT

All electrical repairs should be performed by an Authorized Service Dealer only.

The charger requires little maintenance other than protecting it from damage and weather.

- Clean the battery-charger cords and case with a slightly damp cloth after each use.

  Note: Do not clean the dielectric grease from the terminals.
- Coil the cords when not in use.
- Periodically examine the cords for damage, and replace them when necessary with Exmark-approved parts.

Fuse Locations

The electrical system is protected by fuses. It requires no maintenance. Refer to the *Service Manual* for information on testing and servicing the fuses.

Release the cushion from the rear of the machine and remove the rear access cover to access the fuses.

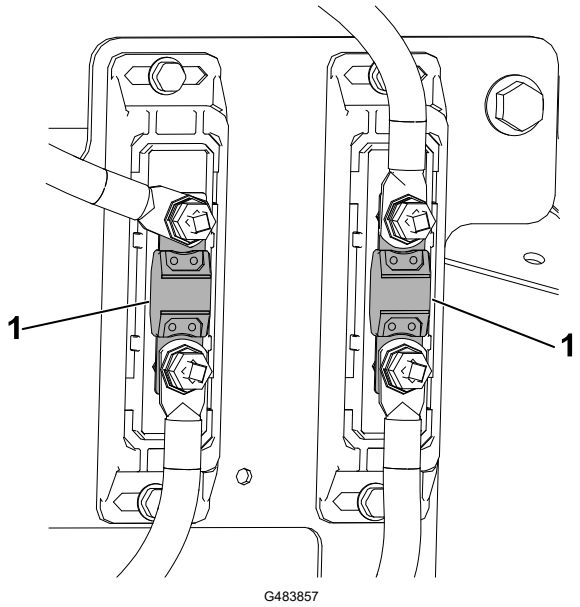

1 Fuse (200 A)

Fuse Locations (continued)

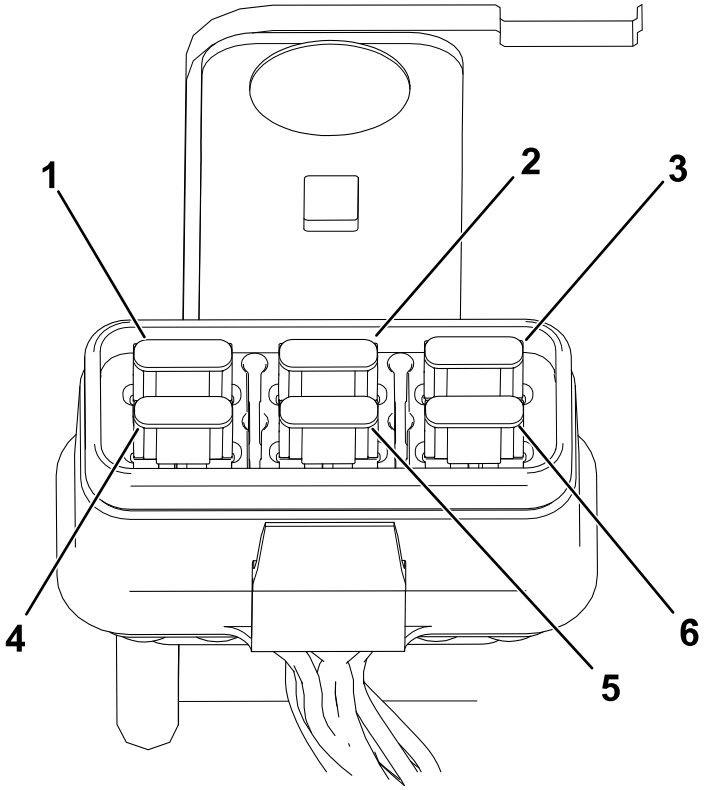

G506437

1. TEC power fuse (5 A)
2. 12 V accessory fuse (5 A)
3. Telematics fuse (2 A)
4. TEK logic fuse (2 A)
5. TEC power fuse (5 A)
6. System fuse (7.5 A)

Fuse Locations (continued)

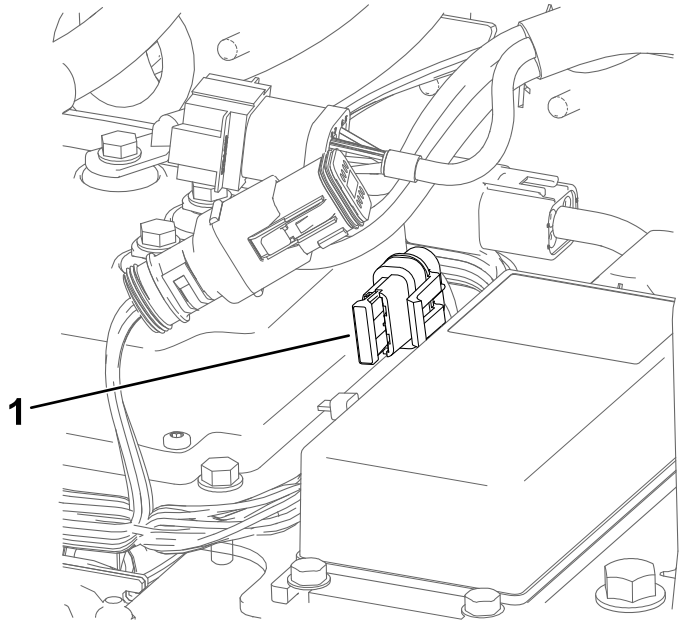

G506438

(1) DC/DC module fuse

Drive System Maintenance

Tire Pressure

Maintain the air pressure in the rear tires at 83 to 97 kPa (12 to 14 psi).

IMPORTANT

Uneven tire pressure can cause an uneven cut.

Note: The front tires are semi-pneumatic tires and do not require air-pressure maintenance.

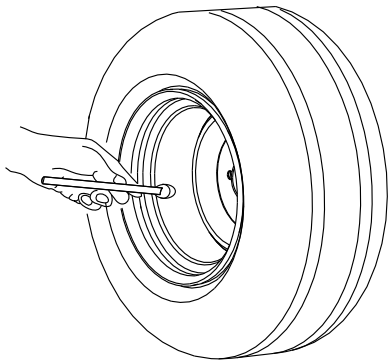

G484084

Adjusting the Caster-Pivot Bearing

1. Disengage the blade-control switch (PTO) and move the motion-control levers outward to the PARK position.
2. Shut off the machine, remove the key, and wait for all moving parts to stop before leaving the operating position.
3. Remove the dust cap from the caster.
4. Tighten the locknut until the spring washers are flat, and then back off a 1/4 turn to properly set the preload on the bearings.

IMPORTANT

Make sure that the spring washers are installed correctly as shown.

5. Install the dust cap.

Adjusting the Caster-Pivot Bearing (continued)

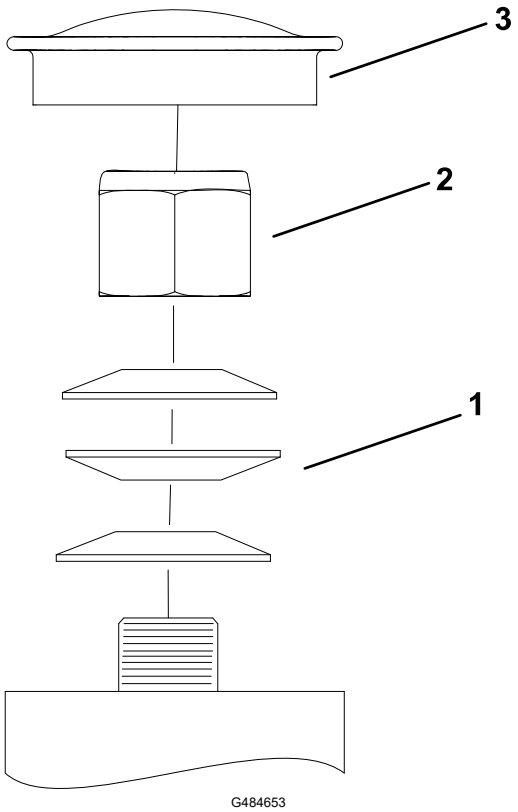

1. Spring washer
2. Locknut
3. Dust cap

Servicing the Caster Wheels and Bearings

The caster wheels rotate on a roller bearing supported by a spanner bushing. If the bearing is kept well lubricated, wear will be minimal. Failure to keep the bearing well lubricated causes rapid wear. A wobbly caster wheel usually indicates a worn bearing.

1. Disengage the blade-control switch (PTO) and move the motion-control levers outward to the PARK position.
2. Shut off the machine, remove the key, and wait for all moving parts to stop before leaving the operating position.
3. Remove the locknut and wheel bolt holding the caster wheel to the caster fork.

Servicing the Caster Wheels and Bearings (continued)

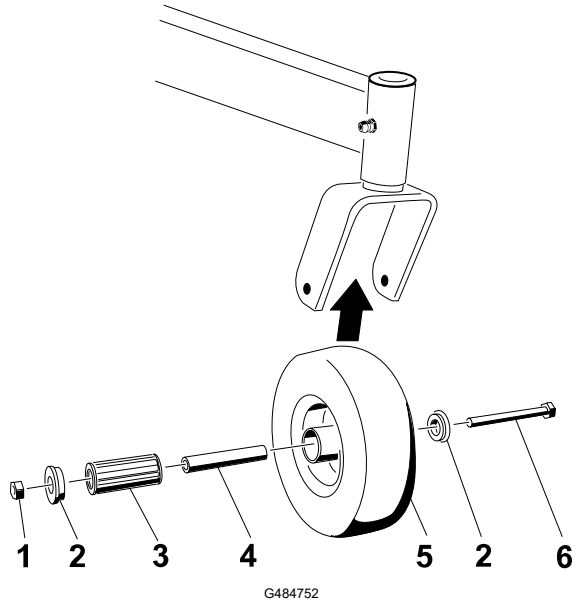

1. Locknut
2. Bushing
3. Spanner bushing
4. Roller bearing
5. Caster wheel
6. Wheel bolt

4. Remove 1 bushing, then pull the spanner bushing and roller bearing out of the wheel hub.
5. Remove the other bushing from the wheel hub and clean any grease and dirt from the wheel hub.
6. Inspect the roller bearing, bushings, spanner bushing and the inside of the wheel hub for wear.

   Note: Replace any damaged or worn parts.
7. Place 1 bushing into the wheel hub.
8. Grease the roller bearing and spanner bushing, and slide them into the wheel hub.
9. Place the second bushing into the wheel hub.
10. Install the caster wheel into the caster fork and secure it with the wheel bolt and locknut.
11. Tighten the locknut until the spanner bushing bottoms against the inside of the caster forks.
12. Grease the fitting on the caster wheel.

Checking the Wheel-Lug Nuts

Check and torque the wheel-lug nuts to **75 to 88 N·m (55 to 65 ft-lb)**.

Changing the Transmission Fluid

Fluid type: Exmark Synthetic Electric Motor Drive Oil

Capacity: 150 mL (5 fl oz)

1. Park the machine on a level surface, disengage the PTO, and move the motion-control levers outward to the PARK position.
2. Shut off the machine, remove the key, and wait for all moving parts to stop before leaving the operating position.
3. Remove the tire as shown.

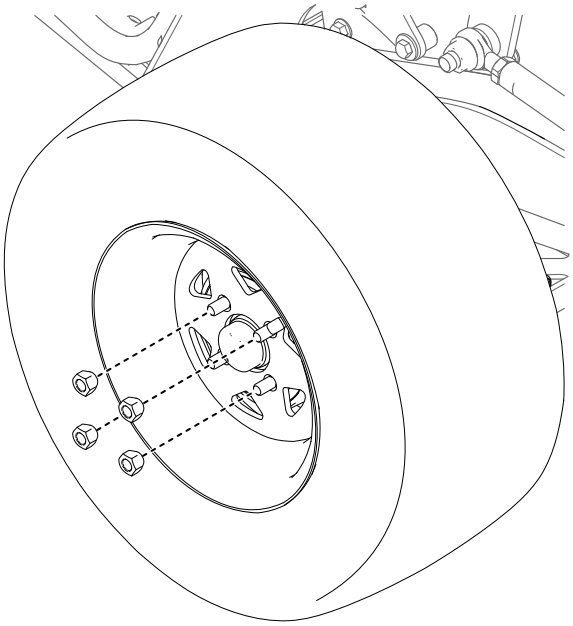

G484763

4. Place a drain pan under the transmission.
5. Remove the top plug and bottom plug. Allow the fluid to drain.

Changing the Transmission Fluid (continued)

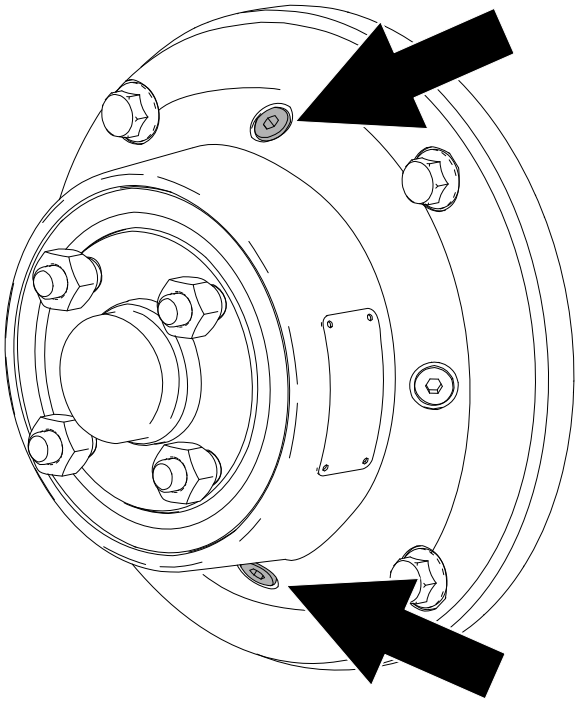

G484764

6. Install the bottom plug and torque it to **7 to 8 N·m (62 to 70 in-lb)**.
7. Remove a side plug.
8. Add fluid, as specified at the beginning of this procedure, through the top hole until the level reaches the side plug opening.

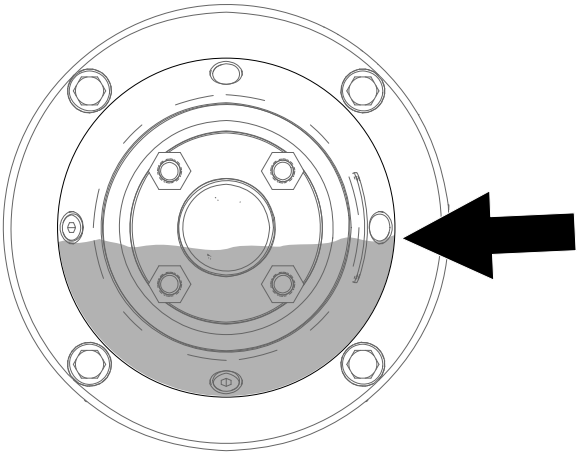

G484765

9. Install the top plug and side plug. Torque them to **7 to 8 N·m (62 to 70 in-lb)**.
10. Install the tire and torque the lug nuts to **75 to 88 N·m (55 to 65 ft-lb)**.
11. Repeat for the other transmission.

Adjusting the Maximum Speed Range

Note: The InfoCenter displays only 2 items at a time; however, the following figures show the full menus for context.

1. Park the machine on a level surface, disengage the PTO, and move the motion-control levers outward to the **Park** position.
2. Enable access to protected menus.
3. In the **Main menu**, scroll down to **Service** and press the → button.

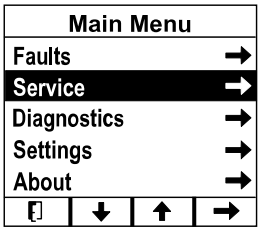

g376300S

4. In the **Service** menu, scroll down to **Max Speed Range** and press the → button.

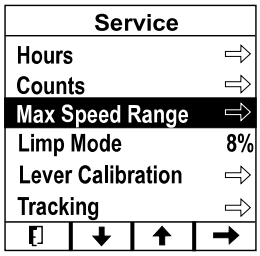

g425331S

5. Adjust the maximum speed range as desired.

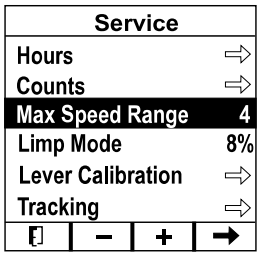

g425330S

Note: The number indicates the maximum speed setting (2 through 7) that the operator can select on the main information screen as shown.

Adjusting the Maximum Speed Range (continued)

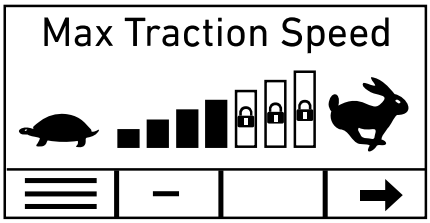

g425332S

6. Press the [ ] button to save the new value.

Controls Maintenance

Calibrating the Levers

1. Park the machine on a level surface, disengage the PTO, and move the motion-control levers outward to the PARK position.
2. In the **Main menu**, scroll down to **Service** and press the → button.

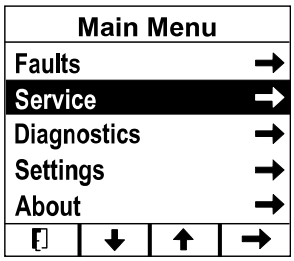

G484863

3. In the **Service** menu, scroll down to **Lever Calibration** and press the → button.

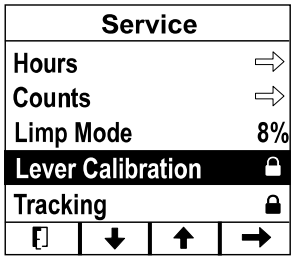

G484864

4. If prompted, enter the PIN code.
5. Follow the prompts on the screen. Press the 💾 button after each step; to exit calibration, press the ⎋ button.

Screen	Action
Lever Calibration Press NEXT to begin	Press the → button.
Left Forward Hold LEFT FORWARD and press SAVE	Hold the left motion-control lever in the FORWARD position and press the 💾 button.
Left Reverse Hold LEFT in REVERSE and press SAVE	Hold the left motion-control lever in the REVERSE position and press the 💾 button.

Calibrating the Levers (continued)

Screen	Action
Left Neutral Hold LEFT in NEUTRAL and press SAVE	Hold the left motion-control lever in the NEUTRAL position and press the button.
Right Forward Hold RIGHT FORWARD and press SAVE	Hold the right motion-control lever in the FORWARD position and press the button.
Right Reverse Hold RIGHT in REVERSE and press SAVE	Hold the right motion-control lever in the REVERSE position and press the button.
Right Neutral Hold RIGHT in NEUTRAL and press SAVE	Hold the right motion-control lever in the NEUTRAL position and press the button.
Lever Calibration Calibration Complete Press NEXT	Press the button.

6. When you complete, exit, or fail calibration, shut off then start the machine to clear the screen.

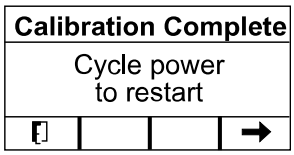

G484874

Adjusting the Tracking

If you push both motion-control levers forward the same distance and the machine pulls to 1 side, adjust the tracking as follows.

1. Park the machine on a level surface, disengage the PTO, and move the motion-control levers outward to the PARK position.
2. In the **Main menu**, scroll down to **Service** and press the button.

Adjusting the Tracking (continued)

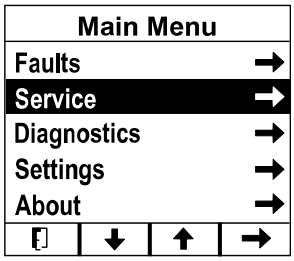

G484863

3. In the **Service** menu, scroll down to **Tracking** and press the → button.

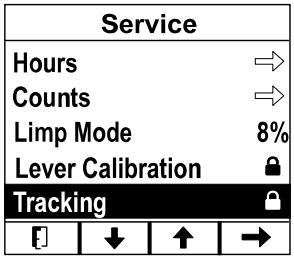

G485100

4. If prompted, enter the PIN code.
5. Adjust the tracking to the left or right.

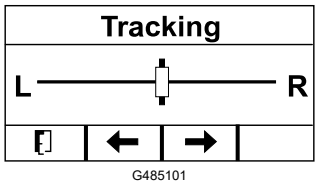

G485101

6. Press the ⌐ button.

Adjusting the Motion-Control Levers

If the motion-control levers do not align horizontally, adjust the motion-control levers.

1. Park the machine on a level surface, disengage the PTO, and move the motion-control levers outward to the PARK position.
2. Shut off the machine, remove the key, and wait for all moving parts to stop before leaving the operating position.
3. Turn the battery-disconnect switch to the OFF position.
4. Push the motion-control levers down out of the PARK position.

Adjusting the Motion-Control Levers (continued)

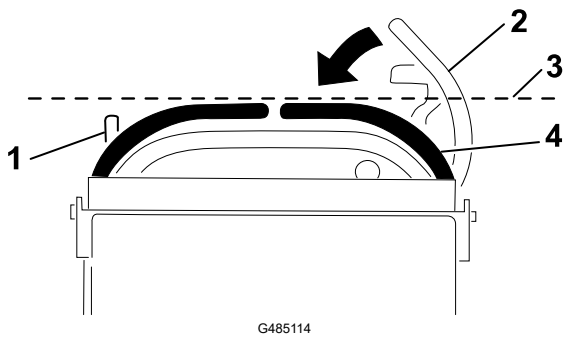

(1) Left motion-control lever
(2) Right motion-control lever in the PARK position
(3) Check the horizontal alignment here.
(4) Right motion-control lever

5. Check the horizontal alignment of both levers by using the front or rear reference bar as a guide.

   Note: If a lever is not aligned, proceed to step 6 to adjust the cam for that lever.

6. Release the cushion from the rear of the machine and remove the rear access cover.
7. Loosen the bolt holding the cam.

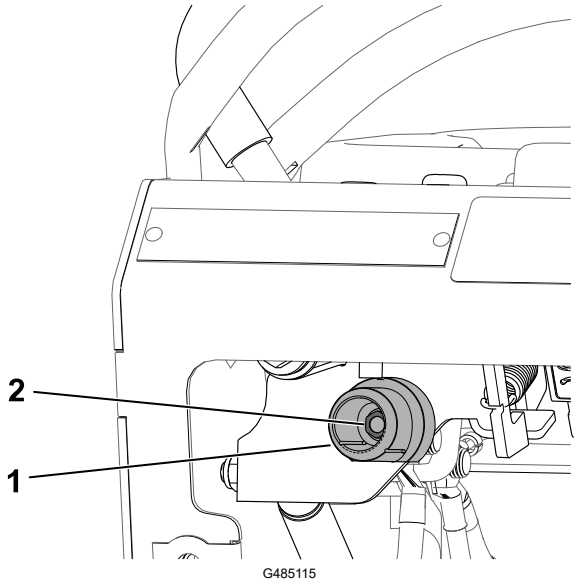

(1) Cam
(2) Bolt

8. Adjust the cam until it aligns with the front or rear reference bar and tighten the bolt for the cam.

   Note: Moving the cam clockwise lowers the handle; moving the cam counterclockwise raises the handle.

Adjusting the Motion-Control Levers (continued)

IMPORTANT

Ensure that the flat portion of the cam does not go above a vertical position (right or left); otherwise you may damage the switch.

9. Install the rear access cover and operator cushion.

Mower-Deck Maintenance

Blade Service

To ensure a superior quality of cut, keep the blades sharp. For convenient sharpening and replacement, keep extra blades on hand.

Replace the blades if they hit a solid object, or if the blade is out of balance or bent.

Before Inspecting or Servicing the Blades

1. Park the machine on a level surface, disengage the PTO, and move the motion-control levers outward to the PARK position.
2. Shut off the machine, remove the key, and wait for all moving parts to stop before leaving the operating position.
3. Unplug the battery charger if it is connected.
4. Turn the battery-disconnect switch to the OFF position.

Inspecting the Blades

1. Inspect the cutting edges (1).
2. If the edges are not sharp or have nicks, remove and sharpen the blade.
3. Inspect the blades, especially in the curved area (2).
4. If you notice any cracks (4), wear, or a slot forming (3) in this area, immediately install a new blade.

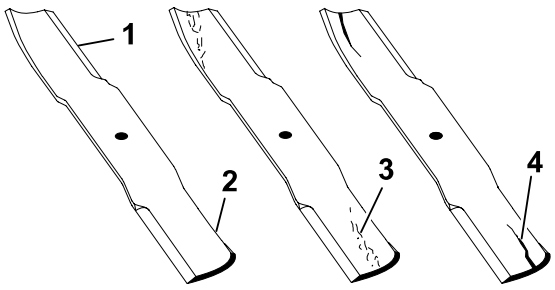

G006530s

Checking for Bent Blades

The machine must be on a level surface for this procedure.

1. Raise the mower deck to the highest height-of-cut position.
2. While wearing thickly padded gloves, or other adequate hand protection, slowly rotate the blade into a position that allows you to measure the distance between the cutting edge and the level surface.

Blade Service (continued)

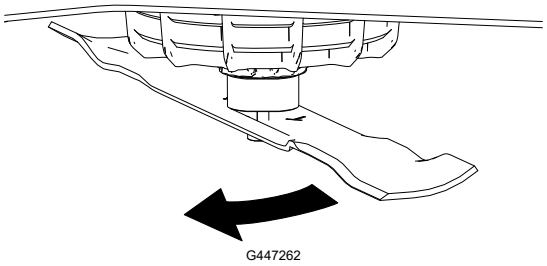

3. Measure from the tip of the blade to the level surface.

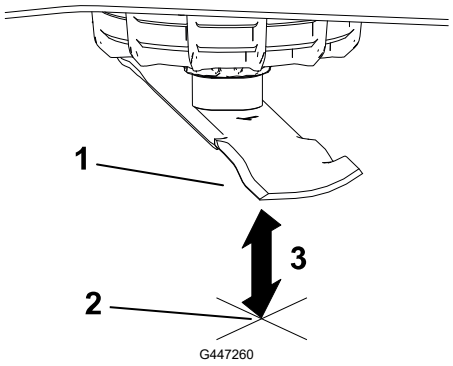

(1) Blade (in position for measuring)

(2) Level surface

(3) Measured distance between blade and the surface (A)

4. Rotate the same blade 180 degrees so that the opposite blade edge is now in the same position.

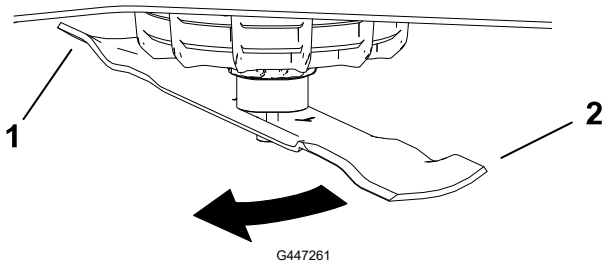

(1) Blade edge previous measured

(2) Opposite blade edge

5. Measure from the tip of the blade to the level surface.

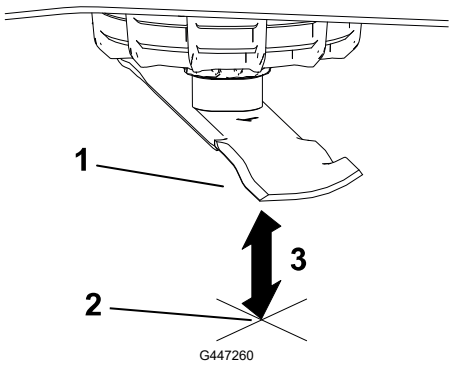

(1) Blade (in position for measuring)

(2) Level surface

(3) Measured distance between blade and the surface (B)

6. If the difference between A and B is greater than 3 mm (1/8 inch), replace the blade.

   Note: If you replace the blade and the difference continues to exceed 3 mm (1/8 inch), the blade motor shaft could be bent. Contact an Authorized Service Dealer for service.

Blade Service (continued)

7. Repeat this procedure for each blade.

Removing the Blades

Replace the blades if they hit a solid object or if the blade is out of balance or bent.

1. Place a wrench on the flat of the blade retainer or hold the blade end using a rag or thickly padded glove.
2. Remove the blade bolt, washer, and blade from the spindle shaft.

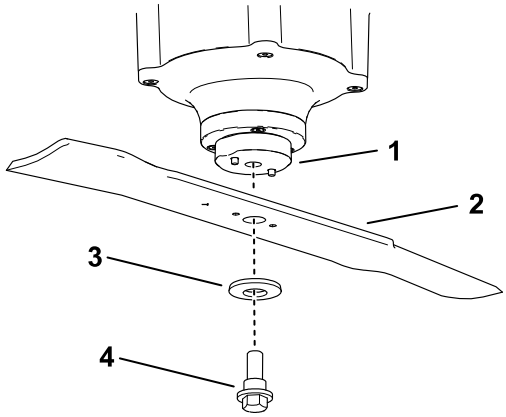

g376322S

(1) Blade retainer
(2) Blade
(3) Washer
(4) Blade bolt

Sharpening the Blades

1. Use a file to sharpen the cutting edge at both ends of the blade. Ensure to maintain the original angle (1).

   Note: Remove the same amount of material from both cutting edges so that the blade retains its balance.

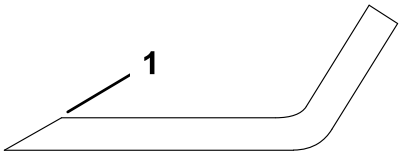

G000552s

2. Check the balance of the blade (1) by putting it on a blade balancer (2).

   Note: If the blade stays in a horizontal position, the blade is balanced and can be used.

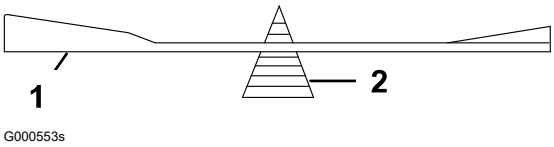

G000553s

   If the blade is not balanced, file some metal off the end of the sail area only.
3. Repeat this procedure until the blade is balanced.

Blade Service (continued)

Installing the Blades

⚠ WARNING ⚠

Operating a machine after incorrectly installing the blade assembly and/or not using genuine Exmark blade and blade hardware could allow a blade or blade component to be thrown out from under the deck, resulting in serious injury or death.

Always install genuine Exmark blades and blade hardware according to the instructions.

---

1. Install the blade to the shaft.

   Note: Ensure that the washer curves downward, as shown, to ensure proper cutting.

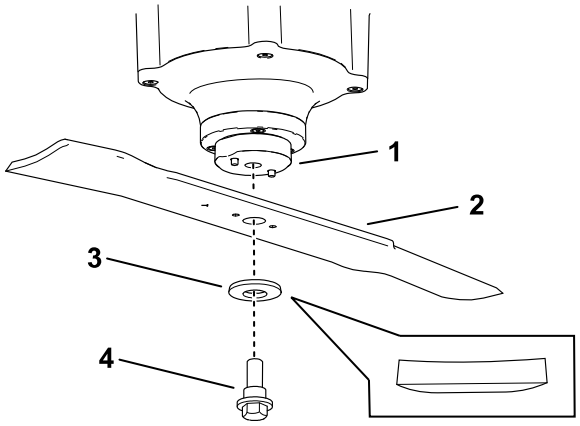

g376321S

(1) Blade retainer
(2) Blade
(3) Washer
(4) Blade bolt

2. Place a wrench on the flat of the spindle shaft and torque the blade bolt to **75 to 81 N·m (55 to 60 ft-lb)**.

Leveling the Mower Deck

Preparing the Machine

Ensure that the mower deck is level any time you install the mower deck or when you see an uneven cut on your lawn.

Level the mower deck side to side before adjusting the front-to-rear slope.

1. Park the machine on a level surface, disengage the PTO, and move the motion-control levers outward to the PARK position.

Leveling the Mower Deck (continued)

2. Shut off the machine, remove the key, and wait for all moving parts to stop before leaving the operating position.
3. Unplug the battery charger if it is connected.
4. Turn the battery-disconnect switch to the OFF position.
5. Check the tire pressure of both drive tires.
6. Check the mower deck for bent blades; remove and replace any bent blades.
7. Lower the mower deck to the 76 mm (3 inch) height-of-cut position.

Checking the Mower Deck Side-to-Side Height

1. Adjust the rear-tire pressure.
2. Set the slope of the mower deck to the lowest setting.
3. Ensure that the blades are not bent.
4. Position the blades side to side.
5. Measure at the **B** and **C** locations from a level surface to the cutting edge of blade tips.

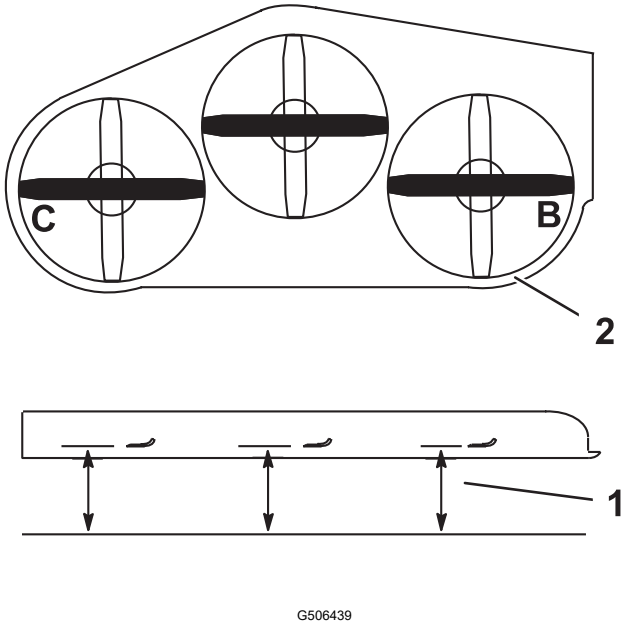

G506439

(1) Measure from a level surface.

(2) Measure the blade at points **B** and **C**.

6. The difference between measurements **B** and **C** should be no more than 6 mm (1/4 inch).

   Note: If it is not correct, level the mower deck from side to side.

Leveling the Mower Deck from Side to Side

1. Loosen the side nut and jam nut in the yokes that you want to adjust.

Leveling the Mower Deck (continued)

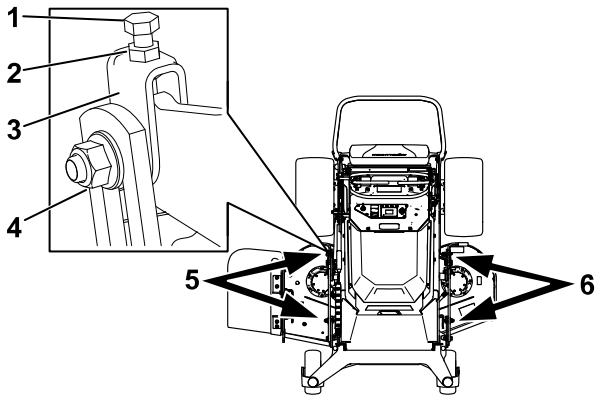

g377364S

(1) Top bolt
(2) Jam nut
(3) Yoke
(4) Side nut
(5) Adjust these yokes to adjust the right side of the mower deck.
(6) Adjust these yokes to adjust the left side of the mower deck.

2. Rotate the top bolt of the yokes to adjust the height of the mower deck.

   Note: Rotate the bolts clockwise to raise the deck; rotate the bolt counterclockwise to lower it.
3. Tighten the jam nuts and side bolts.
4. Check the side-to-side height.

Checking the Mower Deck Front-to-Rear Pitch

1. Adjust the tire pressure in the rear tires to the correct specifications.
2. Set the slope of the mower deck to the lowest setting.
3. With the machine on level surface, position 1 blade front-to-rear.
4. Measure at **A** and **B** locations from a level surface to the cutting edge of the blade tips.

   Note: The mower blade should be 6 mm (1/4 inch) lower in front at **A** than in the rear at **B**.

Leveling the Mower Deck (continued)

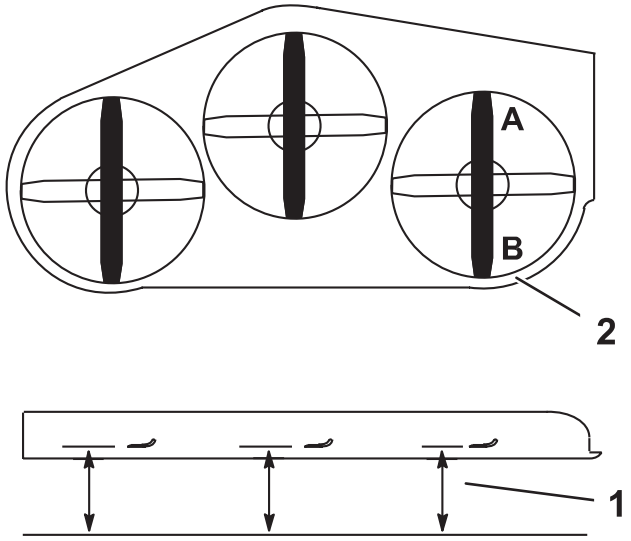

G508873

(1) Measure the blade at points **A** and **B**

(2) Measure from a level surface

5. Rotate the blades and repeat for other blades.
6. If the front-to-rear pitch is not correct, level the mower deck from front to rear.

Leveling the Mower Deck (continued)

Leveling the Mower Deck from Front to Rear

1. Loosen the jam nut and side bolt in the yokes that you want to adjust.

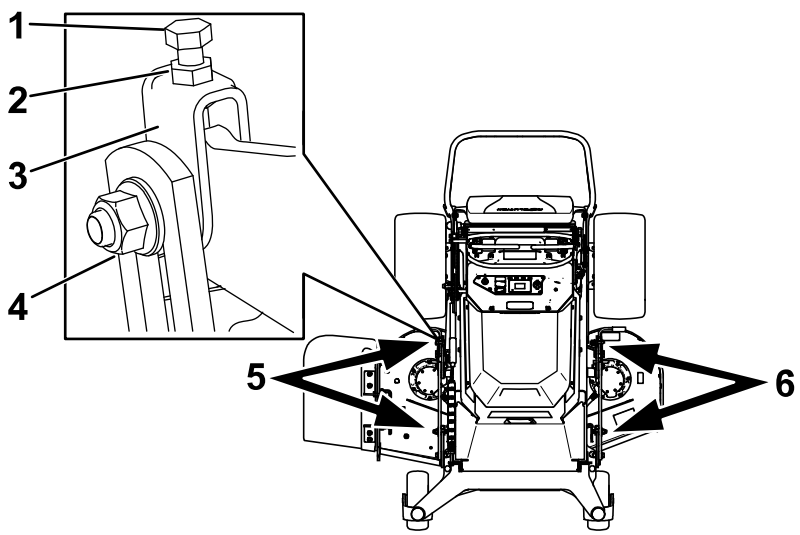

G508950

(1) Top bolt
(2) Jam nut
(3) Yoke
(4) Side nut
(5) Adjust these yokes to adjust the front side of the mower deck.
(6) Adjust these yokes to adjust the rear side of the mower deck.

2. Rotate the top bolt of the yokes to adjust the height of the mower deck.

   Note: Rotate the bolt clockwise to raise the deck; rotate the bolt counterclockwise to lower it.
3. Tighten the jam nuts and side bolts.
4. Check the front-to-rear pitch.

Matching the Height-of-Cut

1. Check the rear tire pressure.
2. Set the height-of-cut to the 76 cm (3 inch) position.
3. With the machine on level surface, position 1 blade front-to-rear.
4. Measure at **A**, and from a level surface to the cutting edge of the blade tips.

   Note: The measurement should be 76 cm (3 inches).

Leveling the Mower Deck (continued)

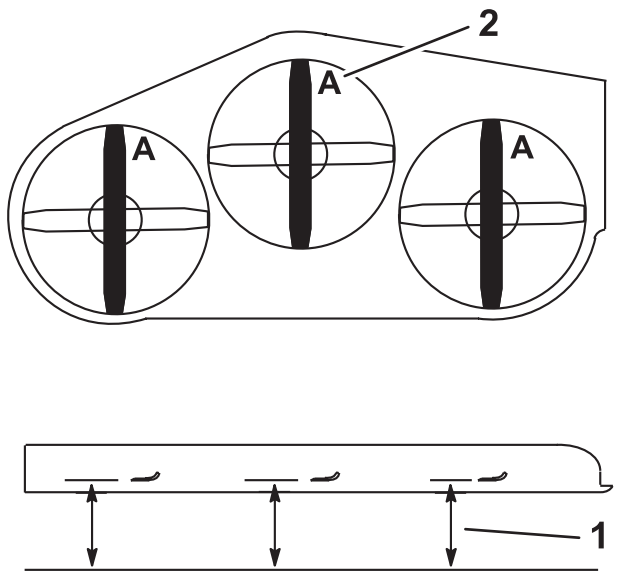

G508871

(1) Measure from a level surface.

(2) Measure the blade at point **A**.

5. If the measurement is not correct, locate the front 2 yokes on the machine.
6. Loosen the side bolt and jam nut of the yokes.
7. Adjust the top bolt of the yokes until the blade tips match 76 cm (3 inches).
8. Tighten the jam nuts and side bolts.

Adjusting the Deck-Lift Spring

Note: Adjusting the compression spring alters how much the deck floats and the amount of effort needed to lift the deck when using the height-of-cut lever.

- More spring extension reduces the lever lift force required and causes the deck to float more.
- Less spring extension increases the lever lift force required and causes the deck to float less.

1. Raise the height-of-cut lever and lock it into the transport position.
2. Verify that the distance between the spring nut and the rear side of the welded mount bracket is 41 mm (1-5/8 inches).
3. If needed, adjust the distance by adjusting the bolt on the front of the mount bracket.

Adjusting the Deck-Lift Spring (continued)

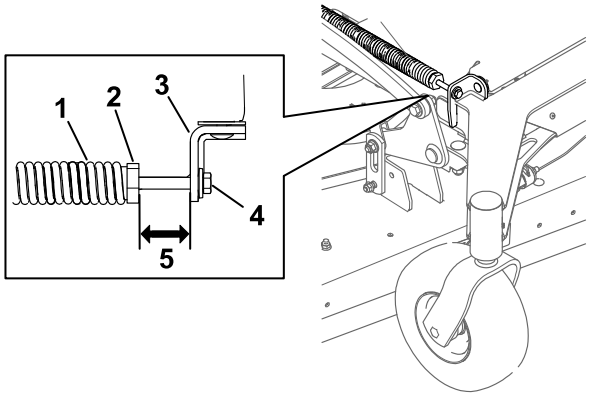

g377366S

(1) Deck-lift spring
(2) Spring nut
(3) Rear side of the mount bracket
(4) Adjustment bolt
(5) 41 mm (1-5/8 inches)

Replacing the Grass Deflector

⚠ DANGER ⚠

An uncovered discharge opening allows objects to be thrown toward you or bystanders. Also, contact with the blade could occur. Thrown objects or blade contact will cause serious injury or death.

Do not operate the mower with the discharge deflector raised, removed, or altered unless a grass collection system or mulch kit is in place and working properly.

---

1. Remove and retain the locknut, bolt, spring, and spacer holding the deflector to the deck brackets.
2. Remove the damaged or worn grass deflector. Inspect the mounting hardware and replace if necessary.
3. Insert the bolt through the deck tab and new grass deflector tab. Install the spacer and spring onto the bolt.

Replacing the Grass Deflector (continued)

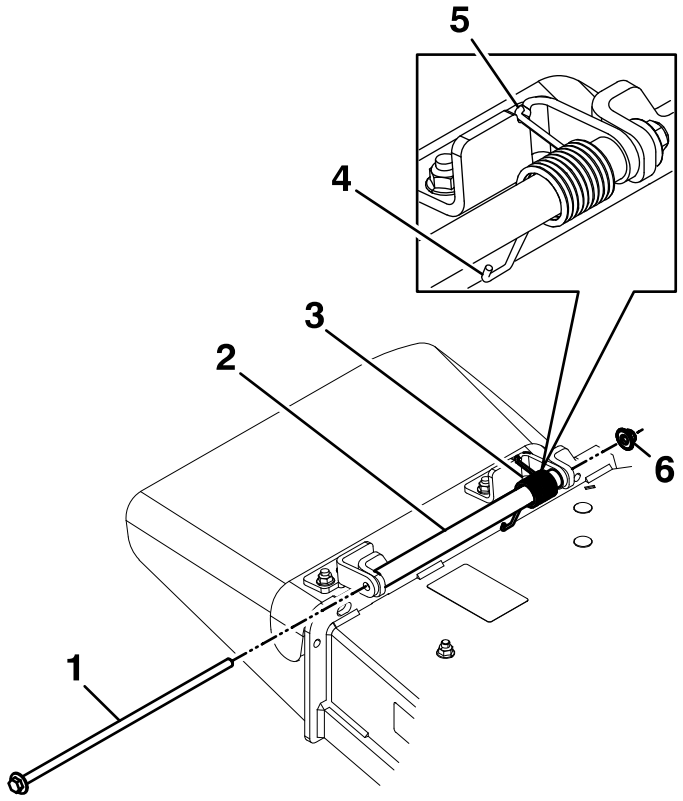

G509073

1. Bolt
2. Spacer
3. Spring
4. Lower J-hook spring end
5. Upper J-hook spring end
6. Locknut

4. Place the upper J-hook spring end into the slot of the discharge deflector bracket and hook it to the outside of the bracket. The lower J-hook spring end is located against the inner deck discharge plate.
5. Continue to insert the bolt through the other discharge deflector tab and deck tab and install the locknut.

IMPORTANT

The grass deflector must be able to rotate. Lift the deflector up to the full open position, and ensure that it rotates into the full-down position.

Hydraulic System Maintenance

Cleaning

Cleaning under the Mower Deck

Remove the grass buildup under the mower daily.

IMPORTANT

Do not use water to clean the machine, otherwise you could damage the motors and other electric components.

⚠ WARNING ⚠

Using compressed air improperly to clean the machine could result in serious injury.

- **Wear appropriate personal protective equipment, such as eye protection, hearing protection, and a dust mask.**
- **Do not aim compressed air at any part of your body or at anyone else.**
- **Refer to the manufacturer's instructions for the air compressor for operating and safety information.**

1. Park the machine on a level surface, disengage the PTO, and move the motion-control levers outward to the PARK position.
2. Shut off the machine, remove the key, and wait for all moving parts to stop before leaving the operating position.
3. Turn the battery-disconnect switch to the OFF position.
4. Raise the front of the machine and use jack stands to support the mower.
5. Clean debris from the machine using compressed air.

Disposing of Waste

Engine oil, batteries, hydraulic fluid, and engine coolant are pollutants to the environment. Dispose of these according to your state and local regulations.

Preparing the Machine for Storage Over 30 Days

1. Park the machine on a level surface, disengage the PTO, and move the motion-control levers outward to the PARK position.
2. Shut off the machine, remove the key, and wait for all moving parts to stop before leaving the operating position.
3. Remove grass clippings, dirt, and grime from the external parts of the entire machine using compressed air.

IMPORTANT

Do not use water to clean the machine, otherwise you could damage the motors and other electric components.

4. Check the brake.
5. Grease the machine.
6. Check the tire pressure.
7. Check and tighten all fasteners. Repair or replace any part that is damaged or missing.
8. Paint all scratched or bare metal surfaces with paint from an Authorized Service Dealer.
9. Store the machine in a clean, dry, garage or storage area. Remove the key from the switch and store it in a memorable place. Cover the machine to protect it and keep it clean.
10. For prolonged storage, follow the battery storage requirements.

Battery Storage Requirements

Note: You do not need to remove the batteries from the machine for storage.

Refer to the temperature limits for storage in the following table:

Temperature Limits for Storage

Storage Temperature	Appropriate Storage Time
45° to 55°C (113° to 131°F)	1 week
25° to 45°C (77° to 113°F)	3 weeks
-20° to 25°C (-4° to 77°F)	52 weeks

IMPORTANT

Temperatures outside of these ranges will damage your batteries.

The temperature that the batteries are stored at will affect their long-term life. Storage for long periods of time at extreme temperatures will reduce the battery life. For temperatures above 25°C (77°F), only store the machine for the appropriate amount of time indicated in the table.

- Before you store the machine, charge or discharge the batteries between 40% to 60% (54.3V to 57.3V).

  Note: A 50% charge is optimal to ensure a maximum battery life. When the batteries are charged to 100% before storage, the battery life shortens.

  If you anticipate that the machine will be stored for a longer period of time, charge the batteries to around 60%.
- For every 6 months of storage, check the battery-charge level and ensure that it is between 40% to 60%. If the charge is below 40%, charge the batteries between 40% to 60%.
- You can use a multimeter to check the charge level when the machine is off. Refer to the following table for the amount of voltage that is equal to the charge level:

Voltage	Charge Level
57.3V	60%
55.4V	50%
54.3V	40%

- After charging the batteries, disconnect the battery charger from power. Disconnect the power connector during storage to minimize the discharging of the batteries.
- If you leave the charger on the machine, it will shut off after the batteries are fully charged. The charger will not turn back on unless it is disconnected and reconnected.

Storing the Charger

1. Disconnect the power to the machine.
2. Disconnect the power supply cord from the charger and coil it securely.
3. Examine the power supply cord thoroughly for signs of wear or damage. Replace it if it is worn or damaged.

4. Examine the charger thoroughly for worn, loose, or damaged parts. To repair or replace parts, contact your authorized Exmark distributor for assistance.
5. Store the charger with the power supply cord in a clean, dry place where it will not be bumped or damaged and not exposed to caustic fumes.

Machine Troubleshooting

The machine vibrates abnormally.

Possible Cause	Corrective Action
The cutting blade(s) is/are bent or unbalanced.	Install new cutting blade(s).
The blade mounting bolt is loose.	Tighten the blade mounting bolt.
The blade spindle is bent.	Contact an Authorized Service Dealer.

The cutting height is uneven.

Possible Cause	Corrective Action
The blade(s) is not sharp.	Sharpen the blade(s).
A cutting blade(s) is/are bent.	Install a new cutting blade(s).
The mower is not level.	Level the mower from side-to-side and front-to-rear.
The mower deck pitch is wrong.	Adjust the front-to-rear pitch.
The underside of the mower deck is dirty.	Clean the underside of the mower deck.
The tire pressure is incorrect.	Adjust the tire pressure.
A blade spindle is bent.	Contact an Authorized Service Dealer.

The blades do not rotate.

Possible Cause	Corrective Action
The safety-interlock system prevents blade rotation.	Contact an Authorized Service Dealer.
The PTO switch is malfunctioning.	Contact an Authorized Service Dealer.

The machine does not operate normally and displays a fault on the display.

Possible Cause	Corrective Action
A machine fault is preventing operation.	Turn the key to the OFF position and start the machine again. If the fault reoccurs, contact an Authorized Service Dealer.

Battery-Charger Error Codes

The battery-charger error codes display on the machine InfoCenter.

- SPN: Suspect Parameter Number
- FMI: Failure Mode Indicator
- OC: Number of occurences

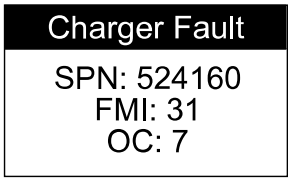

G487357

SPN 4992, FMI 16 or FMI 3

Possible Cause	Corrective Action
The battery voltage is high.	Ensure that the battery voltage is correct and the cable connections are secure; ensure that the battery is in good condition.

SPN 4990, FMI 31

Possible Cause	Corrective Action
A BMS or battery fault is detected.	Contact an Authorized Service Dealer.

SPN 520196, FMI 16

Possible Cause	Corrective Action
The battery amp hour limit is exceeded.	The possible causes include poor battery health, very deeply discharged battery, poorly connected battery, and/or high parasitic loads on battery while charging. The possible solutions: Replace the batteries. Check the DC connections. Disconnect the parasitic loads. This error will clear once the charger is reset by cycling the DC.

SPN 4992, FMI 4

Possible Cause	Corrective Action
Reverse polarity error.	The battery is connected to the charger incorrectly. Ensure that the battery connections are secure.

SPN 520193, FMI 3

Possible Cause	Corrective Action
There is a high AC voltage error (>270VAC).	Connect the charger to an AC source that provides stable AC between 85 to 270 VAC / 45 to 65 Hz.

SPN 524032, FMI 3

Possible Cause	Corrective Action
The charger failed to initialize.	The charger failed to turn on properly. Disconnect the AC input and battery connection for 30 seconds before retrying.

SPN 520193, FMI4

Possible Cause	Corrective Action
There is a low AC voltage oscillation error.	The AC source is unstable. This could be caused by an undersized generator or severely undersized input cables. Connect the charger to an AC source that provides stable AC between 85 to 270 VAC / 45 to 65 Hz.

SPN 524033, FMI 31

Possible Cause	Corrective Action
The re-programming failed.	There is a software upgrade failure or script operation failure. Ensure that the new software is correct.

SPN 524035 or SPN 524042, FMI 31

Possible Cause	Corrective Action
There is a communication error with the battery.	Ensure that the connection of the signal wires to the battery is secure.

SPN 524035 or SPN 524042, FMI 9

Possible Cause	Corrective Action
There is a communication error with the battery.	Ensure that the connection of the signal wires to the battery is secure.

Battery-Charger Fault Codes

SPN 524160, FMI 31

Possible Cause	Corrective Action
There is an internal charger fault.	Remove the AC connection and battery connection for a minimum of 30 seconds and retry. If it fails again, contact an Authorized Service Dealer.

Electrical Diagram

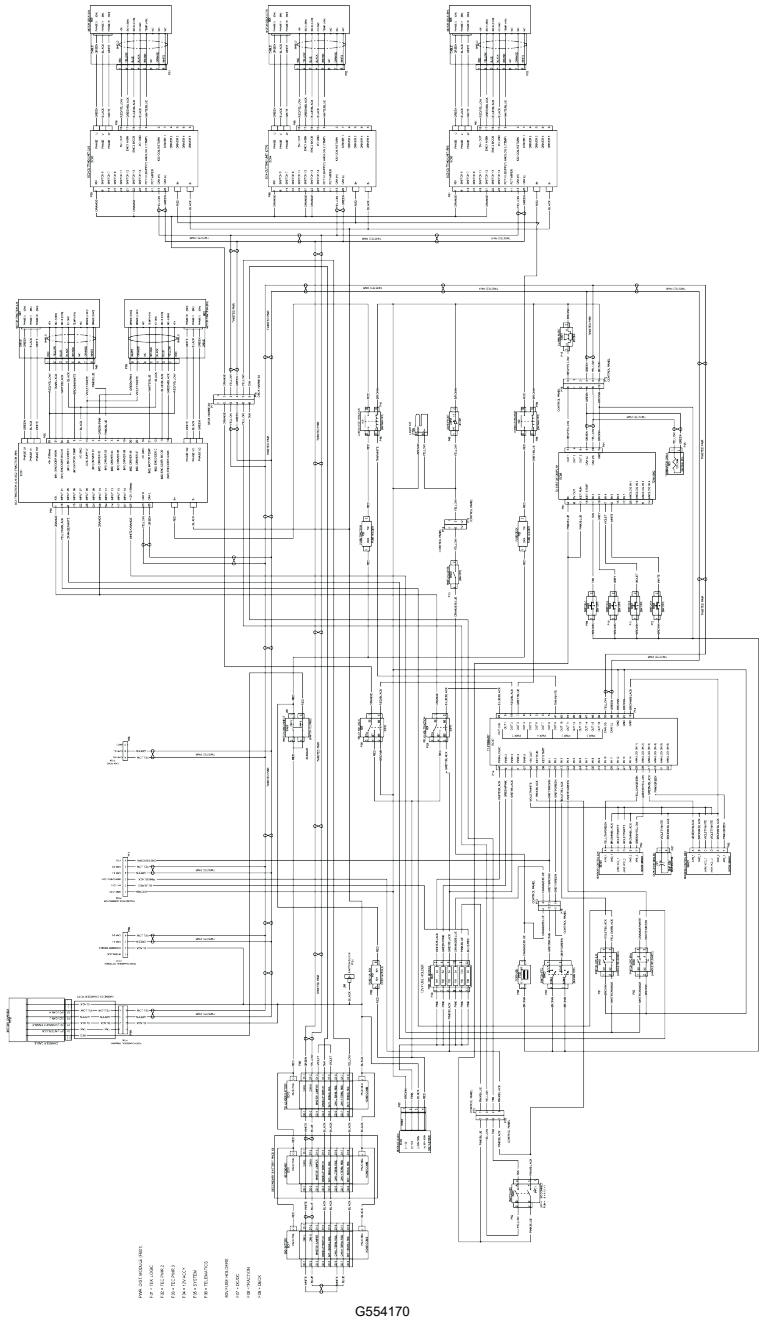

G554170

California Proposition 65 Warning Information

What is this warning?

You may see a product for sale that has a warning label like the following:



WARNING: Cancer and Reproductive Harm—www.p65Warnings.ca.gov.

What is Prop 65?

Prop 65 applies to any company operating in California, selling products in California, or manufacturing products that may be sold in or brought into California. It mandates that the Governor of California maintain and publish a list of chemicals known to cause cancer, birth defects, and/or other reproductive harm. The list, which is updated annually, includes hundreds of chemicals found in many everyday items. The purpose of Prop 65 is to inform the public about exposure to these chemicals.

Prop 65 does not ban the sale of products containing these chemicals but instead requires warnings on any product, product packaging, or literature with the product. Moreover, a Prop 65 warning does not mean that a product is in violation of any product safety standards or requirements. In fact, the California government has clarified that a Prop 65 warning "is not the same as a regulatory decision that a product is 'safe' or 'unsafe.'" Many of these chemicals have been used in everyday products for years without documented harm. For more information, go to https://oag.ca.gov/prop65/faqs-view-all.

A Prop 65 warning means that a company has either (1) evaluated the exposure and has concluded that it exceeds the "no significant risk level"; or (2) has chosen to provide a warning based on its understanding about the presence of a listed chemical without attempting to evaluate the exposure.

Does this law apply everywhere?

Prop 65 warnings are required under California law only. These warnings are seen throughout California in a wide range of settings, including but not limited to restaurants, grocery stores, hotels, schools, and hospitals, and on a wide variety of products. Additionally, some online and mail order retailers provide Prop 65 warnings on their websites or in catalogs.

How do the California warnings compare to federal limits?

Prop 65 standards are often more stringent than federal and international standards. There are various substances that require a Prop 65 warning at levels that are far lower than federal action limits. For example, the Prop 65 standard for warnings for lead is 0.5 µg/day, which is well below the federal and international standards.

Why don't all similar products carry the warning?

- Products sold in California require Prop 65 labelling while similar products sold elsewhere do not.
- A company involved in a Prop 65 lawsuit reaching a settlement may be required to use Prop 65 warnings for its products, but other companies making similar products may have no such requirement.
- The enforcement of Prop 65 is inconsistent.
- Companies may elect not to provide warnings because they conclude that they are not required to do so under Prop 65; a lack of warnings for a product does not mean that the product is free of listed chemicals at similar levels.

Why does Exmark include this warning?

Exmark has chosen to provide consumers with as much information as possible so that they can make informed decisions about the products they buy and use. Exmark provides warnings in certain cases based on its knowledge of the presence of one or more listed chemicals without evaluating the level of exposure, as not all the listed chemicals provide exposure limit requirements. While the exposure from Exmark products may be negligible or well within the "no significant risk" range, out of an abundance of caution, Exmark has elected to provide the Prop 65 warnings. Moreover, if Exmark does not provide these warnings, it could be sued by the State of California or by private parties seeking to enforce Prop 65 and subject to substantial penalties.

Notes:


eXmark®