AccuMEMS

TE Series

Handheld Thermal Imager

User Manual

Scan to Get the Latest UM

support@accumems.com

© Hangzhou Accumems Technology Co., Ltd. All rights reserved.

Manual Usage Guidelines

This manual contains functional descriptions and product usage/management guidelines for various imager models. Due to functional differences among models within the same series, the manual may include explanations that are not applicable to your specific model. All pictures, charts, and other information provided herein are for descriptive and explanatory purposes only and are subject to change without notice due to firmware updates or other reasons. Please note that information regarding new features in the latest firmware may not be included in a timely manner. Use this manual under the guidance and assistance of professionals trained in supporting the product.

For more information or technical support, please visit our official website www.accumems.com or send an email to support@accumems.com.

Trademarks Acknowledgement

AccuMEMS and other AccuMEMS's trademarks and logos are the properties of Hangzhou Accumems Technology Co., Ltd. in various jurisdictions. Other trademarks and logos mentioned are the properties of their respective owners.

CONTENTS

1. Safety Instruction 1

1.1 Power Supply 1

1.2 Battery 1

1.3 Using Environment 2

1.4 Transportation 3

1.5 Maintenance 3

1.6 Emergency 3

1.7 Flashlight 4

1.8 Laws and Regulations 4

1.9 Recycling 4

2. Product Appearance 5

2.1 Imager Appearance 5

2.2 Ports and Buttons 9

3. Getting Started 11

3.1 Charging for the Imager 11

3.2 Power On/Off the Imager 11

3.3 Operation Method 12

3.4 Menus and Controls 13

4. Usage Scene Configuration 17

4.1 Choose a Usage Scene 17

4.2 (Optional) Configure Usage Scene Parameters 22

5. Temperature Measurement 24

5.1 Temperature Accuracy Parameters Configuration 24

5.2 Set Image Measurement Tool 25

5.3 Measurement Tools Configuration 26

5.3.1 Spot Tool 27

5.3.2 Rectangle Tool 28

5.3.3 Circle Tool 29

5.3.4 ΔT and ΔT Alarm 30

5.3.5 Reset Measurement Tools 31

5.4 Alarm Configuration 31

6. Display Configuration 33

6.1 UIRA-IR Configuration 33

6.2 Image Mode Configuration 33

6.3 Switch and Manage Palettes 34

6.4 Color Display 37

6.5 Level & Span Configuration 38

6.6 Digital Zoom Configuration 39

6.7 Screen Brightness Configuration 39
6.8 Unit Configuration 40
6.9 On-Screen Info Configuration 40
7. Pictures and Videos 41
7.1 Capture Pictures 41
7.2 Record Videos 43
7.3 View Pictures and Videos 43
7.4 Manage Files 44
7.5 Manage Albums 46
7.6 Export Pictures and Videos 47
8. Device Connection 48
8.1 Connect via Hotspot (If Applicable) 48
8.2 Connect to Cast Screen 49
9. Maintenance 50
9.1 Time and Date Configuration 50
9.2 Flashlight 50
9.3 Fn Key Configuration 50
9.4 Storage Configuration 50
9.5 View Imager Information 51
9.6 Logs Configuration 51

9.7 Upgrade 51

9.8 Format Memory 52

9.9 Restore Imager Configuration 52

10. Guidance for Common Thermal Imaging Operations 53

10.1 Can the UIRA-Scene Algorithm Detect Water Leaks, Insulation Issues or Heat Irregularities with 100% Accuracy? 53

10.2 Factors may Interfere with the Detection Results of UIRA-Scene 53

10.3 Improve Water Leak Detection Success Rates 54

10.4 Higher-Quality Image 54

10.5 Guidance on Using Thermal Imaging for Common Water Leak Detection 55

10.6 Detect Water Pipe Leaks 56

10.7 Can the Thermal Imager Penetrate Walls or Floors? 59

10.8 Check a Thermal Imager's Temperature Accuracy 59

10.9 Frozen Images 59

10.10 Prolong Battery Life 60

1. Safety Instruction

Read all the safety notes and instructions in the AccuMEMS User Manual for use of the AccuMEMS products. Failure to heed the following instructions can lead to electric shock, fire and/or severe injuries.

1.1 Power Supply

- If a power adapter is provided in the imager package, use the provided adapter only. If no power adapter is provided, ensure the power adapter or other power supply complies with Limited Power Source or Limited-Energy Circuit. Please refer to technical specifications or product label for detailed information.
- Connection Requirements: Securely insert plug into power socket until fully engaged.
- DO NOT connect multiple imagers to one power adapter, to avoid over-heating or fire hazards caused by overload.

1.2 Battery

- Warning: Explosion Hazard

  Confirm there is no flammable material within 2 m of the charger during charging.
- Prohibited Disposal Methods
  - DO NOT dispose in fire or high-temperature ovens.
  - DO NOT mechanically crush or cut the battery.
  - DO NOT expose the battery in an extremely high temperature environment, which may result in an explosion or the leakage of flammable liquid or gas.
  - DO NOT subject the battery to extremely low air pressure, which may result in an explosion or the leakage of flammable liquid or gas.

- DO NOT place the battery near heating or fire source. Avoid direct sunlight.
- DO NOT swallow the battery to avoid chemical burns.
- Do NOT use the imager in environments where children are likely to be present.

- Mandatory Disposal: Follow battery manufacturer's recycling instructions precisely.
- Integrated Battery Maintenance
  - For long-term storage: Maintain full charge every 90 days. Otherwise, damage may occur.
  - Before using the imager after storage, turn off the imager and charge it for at least 30 minutes.
  - When the imager is off and the RTC battery is at full charge, time settings can be maintained for 6 months.
  - The lithium battery has a rated voltage of 3.7 V and a capacity of 4950 mAh (18.315 Wh).

1.3 Using Environment

- Running Environment Requirement of the Imager:
  - The operating temperature shall be 14 °F to 122 °F, and the operating humidity shall be 95% or less.
  - Place the imager in a dry and well-ventilated environment.
- Prohibitions:
  - DO NOT expose the imager to high electromagnetic radiation or dusty environments.
  - DO NOT aim the lens at the sun or any other bright light.
  - The imager is suitable for indoor use only.

1.4 Transportation

- Packaging Requirements: Transport the imager exclusively in its original packaging or equivalent protective materials. Retain all packaging components after unboxing for potential reuse
- Return & Liability Conditions: In the event of imager failure requiring factory return: utilize original packaging or equivalent packaging for transportation. Transportation without original packaging may cause damage, and the manufacturer assumes no liability for damages occurring under such circumstances.
- Operational Prohibitions: DO NOT drop the product or subject it to physical shock. Keep the imager away from magnetic interference.

1.5 Maintenance

- DO NOT maintain the imager when it is powered on, or it may cause electric shock!
- If the product does not work properly, please contact your dealer or the nearest service center. We shall not assume any responsibility for problems caused by unauthorized repair or maintenance.
- Wipe the imager gently with a clean cloth and a small quantity of ethanol, if necessary.
- If the equipment is used in a manner not specified by the manufacturer, the protection provided by the device may be impaired.
- Be aware that the current limit of the USB 3.0 PowerShare port may vary by PC brand, potentially causing incompatibility. If the USB device fails to be recognized through the USB 3.0 PowerShare port, it is advisable to use a standard USB 3.0 or USB 2.0 port instead.

1.6 Emergency

Upon detecting smoke, abnormal odors, or noise originating from the imager:

- immediately cut all power sources
- unplug the power cable
- notify authorized service center

1.7 Flashlight

- The light beam at 200 mm distance is classified as Risk Group 1 (RG1).
- Wear appropriate eye protection or DO NOT turn on the white light when you assemble, install or maintain the camera.
- If appropriate shielding or eye protection is not available, turn on the light only at a safe distance or in the area that is not directly exposed to the light when installing or maintaining the imager.

1.8 Laws and Regulations

Use of the product must be in strict compliance with the local electrical safety regulations.

1.9 Recycling

Please follow local recycling requirements for proper disposal.

2. Product Appearance

Imager models may differ in appearance and componentry. Always refer to your imager.

2.1 Imager Appearance

Touch Screen Control & Button Control:

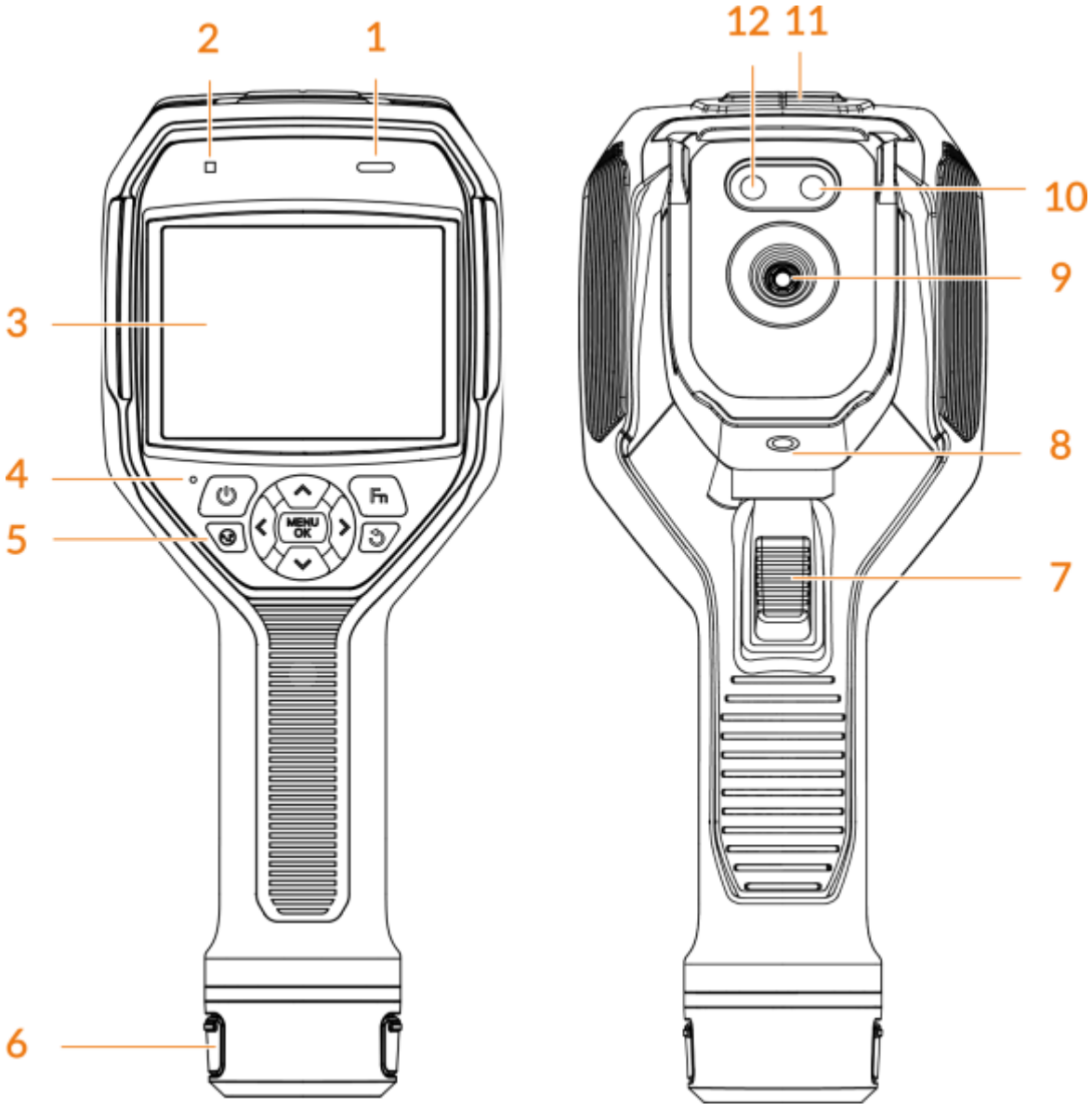

No.	Component	Function
1	Buzzer	Play audio of recorded video and emit sound alarm.
2	Humidity	Set the relative humidity of current environment.
3	Touch Screen	View real-time image and operate the imager via touch control.
4	Indicator of the Charger	● Solid Red: Charging in progress. ● Solid Green: Fully charged.
5	Buttons	Operate the imager. Refer to 2.2 Ports and Buttons.
6	Removable Battery	Power the imager.
7	Trigger	● Press to take a picture in real-time interface. ● Press to go back to real-time interface in menu mode. ● Hold to start recording a video. Press again to stop.
8	Tripod Mount	Mount the imager on a tripod.
9	Thermal Lens	View the thermal image.

10	Flashlight	● Provide additional light for objects. ● Emit a flashing alarm signal.
11	Port Cover	Protect the port interface.
12	Visual Lens	View the visual image.

Button Control ONLY:

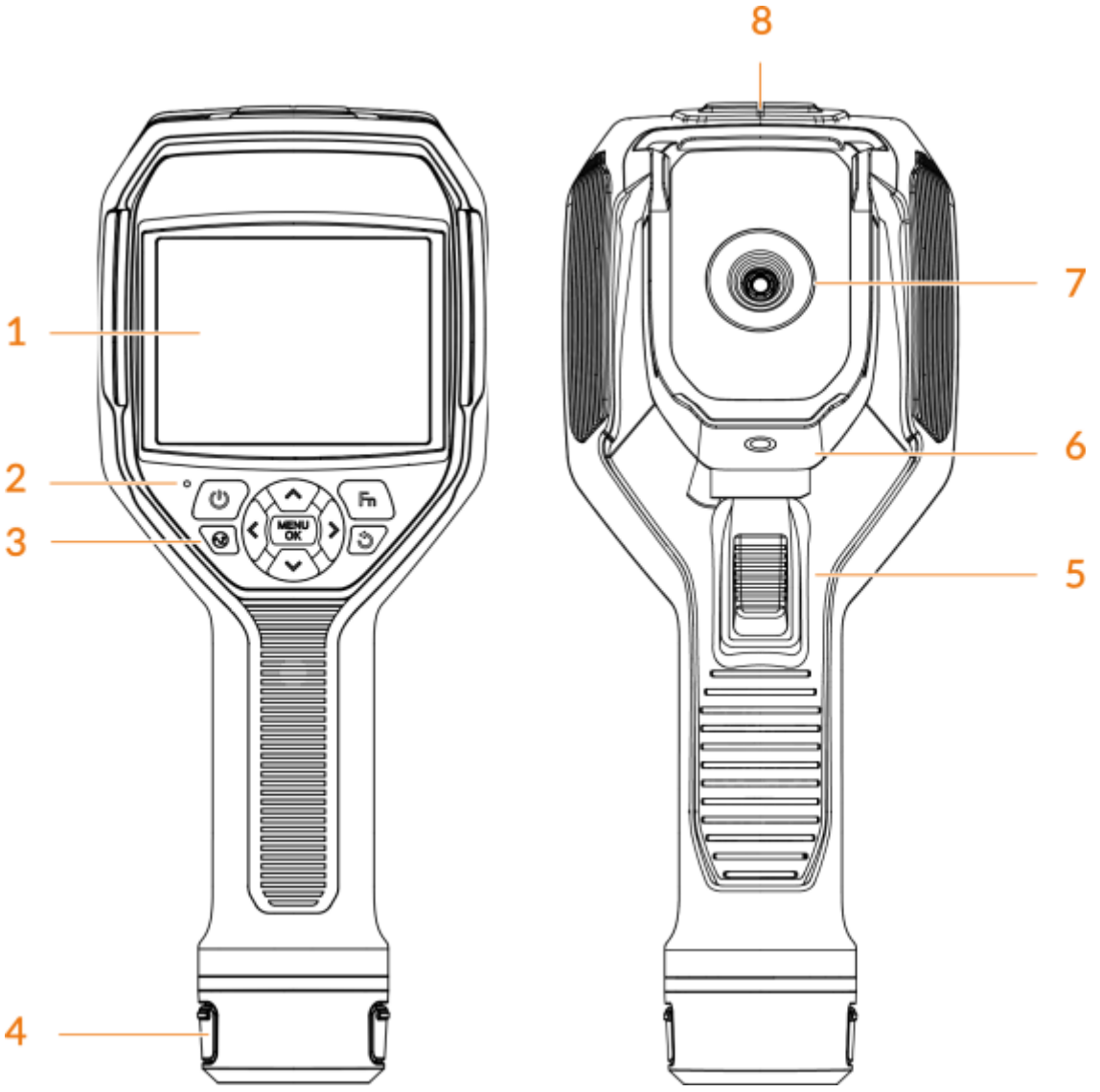

No.	Component	Function
1	Screen	View the real-time interface.
2	Indicator of the Charger	● Solid Red: Charging in progress. ● Solid Green: Fully charged.
3	Buttons	Operate the imager. Refer to 2.2 Ports and Buttons.
4	Removable Battery	Power the imager.
5	Trigger	● Press to take a picture in real-time interface. ● Press to go back to real-time interface in menu mode. ● Hold to start recording a video. Press again to stop.
6	Tripod Mount	Mount the imager on a tripod.
7	Thermal Lens	View the thermal image.
8	Port Cover	Protect the port interface.

2.2 Ports and Buttons

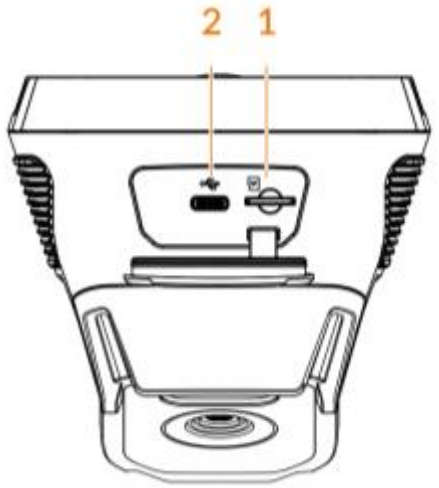

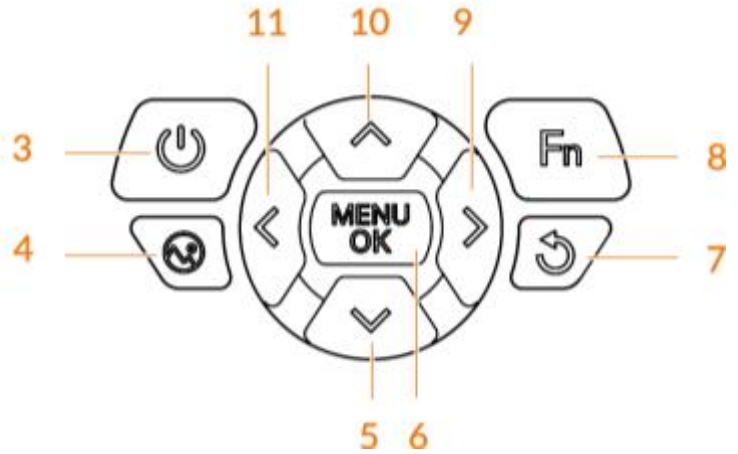

No.	Component	Function
1	Memory Card Slot	Memory card slot. With a 64GB memory card pre-installed.
2	Type-C Port	Type-C Interface. Battery charging, and data export.
3	Power Button	Holding Button: Power On/Off
4	Pictures	Pictures. Press to enter picture and video albums.
5	Arrow Down	• Press: In real-time interface, press to enter image zooming. Press/hold 《 or 》 to change the ratio. • Navigate down during menu operation and configuration.

6	MENU/OK	● Call tool bar in real-time interface. ● Confirm action during menu operation and configuration.
7	Return	Go back to the previous menu or exit the current one.
8	Funtion Button	Press to calibrate the device (default), switch image mode, palettes, and usage scene. Function configurable. **NOTE** **Only some models support configuring the usage scene and image mode. Always refer to your imager.**
10	Arrow Right	Navigate right during menu operation and configuration.
11	Arrow Up	● Turn on/off flashlight in real-time interface ● Navigate up during configuration.
12	Arrow Left	Navigate left during menu operation and configuration.

3. Getting Started

3.1 Charging for the Imager

NOTE

Please make sure the battery is installed before charging.

User should prepare a power adapter to charge the imager. The adapter (not included) should meet the following requirements:

- Output Voltage/Current: 4.2 VDC/3 A
- Minimum Power Output: 12.4 W

1. Make sure the battery is securely installed.
2. Open the port cover.
3. Insert the included USB cable into the port, and connect the imager to a power source via the power adapter for charging.

NOTE

It is advised to charge the imager for at least half an hour before turning it on if it has been over-discharged from prolonged inactivity.

3.2 Power On/Off the Imager

Power On

To activate the imager, hold ⏻ for 3 second. When the imager's interface is steady, you can see the target.

NOTE

After turning the imager on, it can take at least 30 seconds before it is ready for use.

Power Off

When powered on, hold the ⏻ button for 2 seconds to turn off the imager.

Auto Power-Off Configuration

To configure the imager's automatic shutdown time as needed, press MENU OK and go to ⚙ → More Config → Auto Power-off.

3.3 Operation Method

The device supports both touch-screen control and button control.

Touch-screen Control

Tap on the screen to set parameters and configurations.

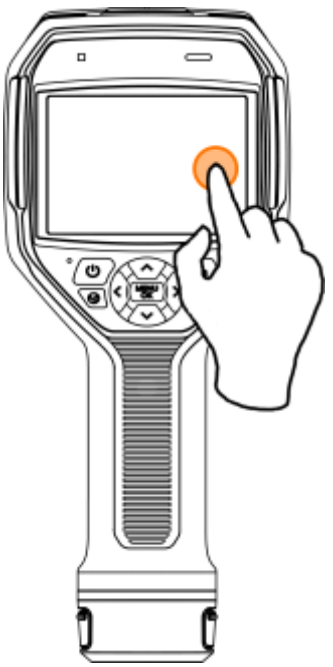

Button Control

Press the buttons to set parameters and configurations.

3.4 Menus and Controls

The imager features a touch-control screen, allowing for all controls via simple screen taps.

Real-Time Interface

NOTE

Imager models may differ in real-time interface. Always refer to your imager.

Tool Bar

Touch Screen Control & Button Control

Button Control ONLY

Icon	Description
	Configure local imager preferences and basic operations.
	Choose a scene according to the faults or irregularities to locate in a specific detection scene.
	Enable or disable measurement functions.
	Switch between thermal, visual, fusion, and other image modes.
	Change the thermal image palettes.
	Adjust level & span for thermal image display. Refer to 6.5 Level & Span Configuration.

Swipe-down Menu (Touch Screen ONLY)

On the real-time interface, swipe down from the top to open the swipe-down menu. You can turn imager functions on or off, switch display themes, and adjust screen brightness etc.

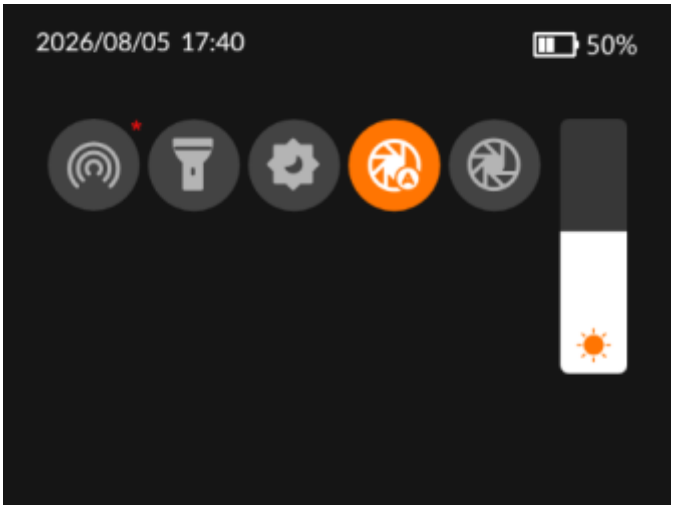

Icon	Description
	Turn the flashlight on or off.
	Switch between day and night themes.
	Adjust the screen brightness.
	After enabling auto calibration, the imager will automatically perform Flat Field Correction (FFC). During the process, a brief "click" sound is emitted and the real-time interface temporarily freezes.
	Tapping the manual calibration icon initiate an FFC. This function is ideal for complex conditions, as it

	prevents frequent automatic adjustments from disrupting operations.
*	Turn on/off hotspot.

NOTE

- *Hotspot are only available on certain models. Always refer to your imager.
- When the imager is connected to the App over a hotspot (if applicable), users can view the real-time interface, capture pictures, record videos, and transfer files.
- As this manual is updated regularly, the interfaces may differ slightly from your specific model. Always refer to your imager.

4. Usage Scene Configuration

To facilitate rapid anomaly detection, **Usage Scene** offers a range of preset templates designed for different situations.

NOTE

Usage Scene is only supported by certain models. Always refer to your imager.

1. Choose a suitable scene or create a customized one according to detection targets. Refer to **4.1 Choose a Usage Scene** for detailed instructions.
2. (Optional) Adjust scene parameters. Refer to **4.2 (Optional) Configure Usage Scene Parameters** for detailed instructions.
3. (Optional) Configure alarms as needed. Refer to **5.4 Alarm Configuration** for detailed instructions.
4. See detection results in the real-time interface.

4.1 Choose a Usage Scene

Choose a scene according to the faults or irregularities you want to locate in a specific detection scene.

1. In real-time interface, press MENU OK and go to ⊞ to select **Usage Scene**.
2. Choose a desired scene.

Moisture Detect

This scene is used to detect water leaks on indoor building ceilings, walls, and floors.

UIRA-Scene technology enables rapid identification of irregularities during leak inspections. Upon enabling this function, if moisture irregularities are detected, the system will mark them with “Suspect” indicators and red frames in the real-time interface.

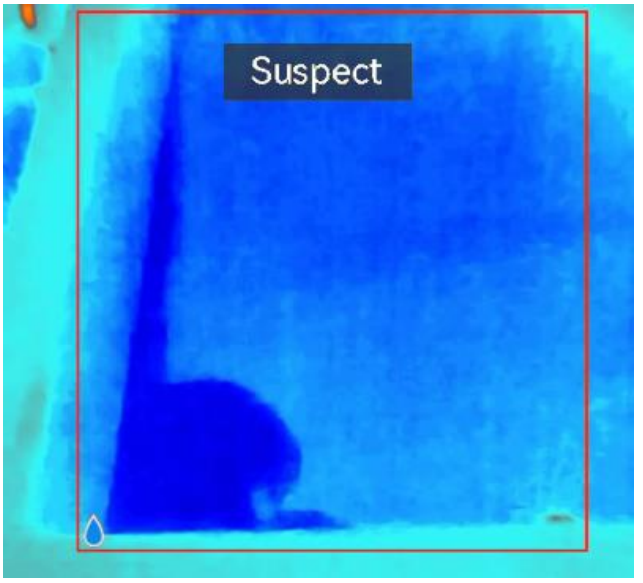

NOTE

- If the temperature difference in areas with moisture irregularities is too subtle to be detected, missed or incorrect reporting may occur.
- A secondary diagnosis using the UIRA-Scene function is recommended. The algorithm for this function is currently being updated.
- Simultaneously enabling UIRA-IR and UIRA-Scene reduces the frame rate.
- To use the alarm function of this scene, go to Settings → Alarm Trigger. For details, refer to **5.4 Alarm Configuration**.
- The picture is for reference only. Always refer to your imager.

Home Insulation

This scene is used to detect home insulation irregularities of indoor building structures such as walls and ceilings, common users can apply this scene.

UIRA-Scene technology enables rapid identification of irregularities during insulation inspections. Upon enabling this function, if insulation irregularities are detected, the system will mark them with “Suspect” indicators and red frames in the real-time interface. If air leak points

are detected, the system will mark them with “Suspect Air Leak” indicators and red frames in the real-time interface.

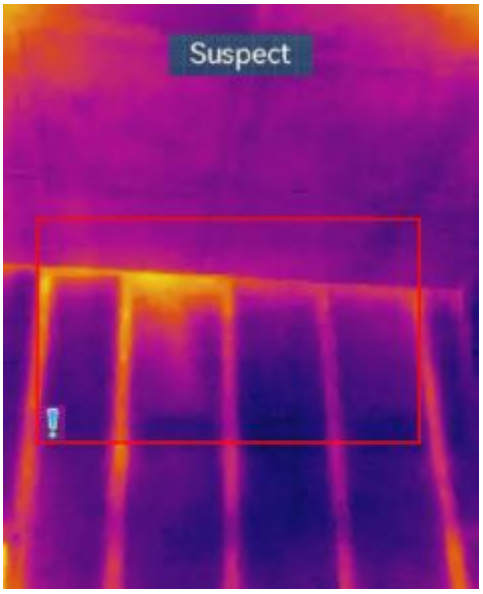

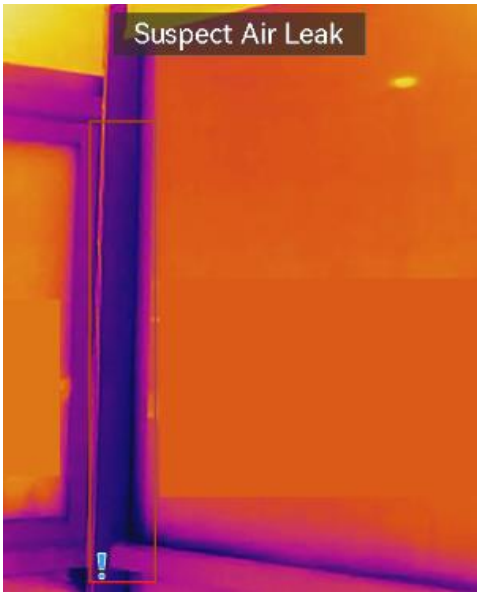

NOTE

- If the temperature difference in areas with insulation irregularities is too subtle to be detected, missed or incorrect reporting may occur.
- A secondary diagnosis using the UIRA-Scene function is recommended. The algorithm for this function is currently being updated.
- Simultaneously enabling UIRA-IR and UIRA-Scene reduces the frame rate.
- To use the alarm function of this scene, go to Settings → Alarm Trigger. For details, refer to **5.4 Alarm Configuration**.
- The picture is for reference only. Always refer to your imager.

Pro Insulation

This scene is used to detect indoor insulation anomalies of building walls and ceilings. The required parameters include **Indoor Temp.**, **Outdoor Temp.**, and **Insulation Level**.

When indoor temperature is less than or equal to outdoor

temperature, regions with insulation levels surpassing the preset threshold will be highlighted in cyan. Conversely, if indoor temperature exceeds outdoor temperature, areas with insulation levels lower than the preset threshold will be marked in cyan.

NOTE

- Indoor Temp. represents the current indoor temperature.
- Outdoor Temp. represents the current outdoor temperature.
- Insulation Level represents an integer ranging from 0 to 100. Typical values for new buildings fall within 60–80%. A high value indicates higher insulation requirements for the building.

Pro Moisture

To detect potential indoor moisture issues, it is necessary to configure **Relative Humidity**, **Ambient Temp.**, and **RH Threshold**.

Regions with condensation issues will be highlighted in green when the measured relative humidity surpasses the specified **RH Threshold**.

NOTE

- Relative Humidity represents the current humidity level.
- Ambient Temperature represents to the current atmospheric temperature.
- RH Threshold represents the humidity upper limit of the target surface. A relative humidity of 100% signifies that water vapor condenses into liquid water (dew point), while levels around 70% or higher may promote mold growth.
- Values of Relative Humidity and Ambient Temp. can be acquired using hygrometers and thermometers respectively.

Floor Heating

This scene is used to detect and monitoring faults in underfloor heating systems.

UIRA-Scene technology enables rapid identification of irregularities during floor heating inspections. Upon enabling this function, if heat

irregularities are detected, the system will mark them with “Suspect” indicators and red frames in the real-time interface.

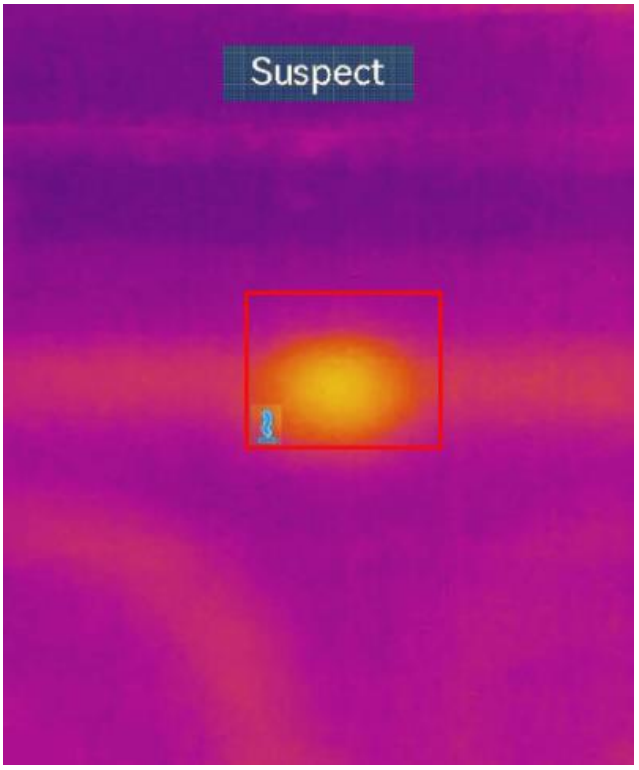

NOTE

- If the temperature difference in areas with heat irregularities is too subtle to be detected, missed or incorrect reporting may occur.
- A secondary diagnosis using the UIRA-Scene function is recommended. The algorithm for this function is currently being updated.
- Simultaneously enabling UIRA-IR and UIRA-Scene reduces the frame rate.
- To use the Alarm function of this scene, go to Settings → Alarm Trigger. For details, refer to**5.4 Alarm Configuration**.
- The picture is for reference only. Always refer to your imager.

Electrical Failure

Used for detecting and monitoring faults in wires, circuits, electrical components, terminators, and similar items.

Solar Panel

Used for detecting and monitoring faults in solar panels.

Custom

Allows users to create a personalized mode by saving preferred temperature measurement parameters for later use. Refer to **4.2 (Optional) Configure Usage Scene Parameters** for detailed instructions.

4.2 (Optional) Configure Usage Scene Parameters

1. Users can adjust related parameters to achieve more precise detection results. In **Usage Scene**, choose a desired scene and then set parameters.

NOTE

Parameters vary depending on the selected scene.

Parameters	Description
Distance	Configure the distance between the imager and the target object.
Emissivity	Configure the emissivity value according to the target object.
Palettes	Palettes represent temperature using different colors. Users can select a preferred color palette.
Level & Span	The temperature scale on the right helps visualize the color-temperature

	relationship in the image. Refer to **6.5 Level & Span Configuration** for detailed instructions.
Temperature Range	Select the temperature measurement range. In **Auto Switch** mode, the imager automatically detects temperature and switches ranges accordingly.
Alarm Config	When the target temperature triggers a configured alarm rule, users can be notified through configured rules. Refer to **5.4 Alarm Configuration** for detailed instructions.
Color Display	Choose between **Linear** and **Histogram** modes for different scenarios to enhance detail visibility: • **Linear**: Optimized for detecting small high-temperature targets against a low-temperature background. • **Histogram**: Enhanced visibility of small low-temperature targets in high-temperature areas.

5. Temperature Measurement

To get more precise and real-time temperature of the target, user can set measurement tools and alarms as needed.

5.1 Temperature Accuracy Parameters Configuration

To increase temperature measurement accuracy, you can go to ⚙ →**Temp. Settings** to adjust the measurement parameters.

NOTE

After adjusting the emissivity and distance parameters in the Temp. Settings, the emissivity and distance values in the Usage Scene will also be modified accordingly.

Emissivity

Configure the target's emissivity. Emissivity is a parameter that measures the thermal radiation capability of an object's surface, indicating the efficiency with which the object emits energy outward.

1. Choose a preset value or customize it.
2. Tap < to save and exit.

Distance

Configure the distance between the target and the imager.

- For templates based on approximate imager-to-target distance, use **Near/Middle/Far** modes.
- For precise customization, choose **Custom** mode.

1. Choose a distance mode.
2. Tap < to save and exit.

Other Parameters:

Parameters	Description
Refl. Temp.	When measuring low-emissivity targets, set the reflected temperature to that of any interfering high.
Ambient Temp.	Configure the ambient temperature.
Humidity Mode*	Configure the auto or manual mode.
Humidity	Configure the ambient humidity.

NOTE

When temperature values display "~", measurements have not yet stabilized. This symbol typically appears during startup and disappears when stable readings are achieved.

5.2 Set Image Measurement Tool

The imager measures the entire scene temperature and can be configured to display center, hot, and cold points.

Icons	Description
	Display the scene's hot point and its max. temperature.
	Display the scene's cold point and the min. temperature.

	Display the scene's center point and its temperature.

5.3 Measurement Tools Configuration

In real-time interface, press MENU OK and go to to select a type of temperature measurement tool.

NOTE

Only some models support configuring Rectangle, Circle, and ΔT. Always refer to your imager.

Tools	Description
Spot	Configuring spot tools, refer to 5.3.1 Spot Tool.
Rectangle	Configuring rectangle tools, refer to 5.3.2 Rectangle Tool.
Circle	Configuring circle tools, refer to 5.3.3 Circle Tool.
ΔT	Configuring ΔT tools, refer to5.3.4 ΔT and ΔT Alarm.

Configure Tools

Add a tool, modify the set tools, hide or display the tools and measurement results, etc.

Icons	Description
	Modify the tools

+	Add a tool.
🗑	Delete the tools.
👁	Hide or display the tools and measurement results.

5.3.1 Spot Tool

The device can detect the temperature of a custom spot.

1. Select ✛.
2. Press MENU OK to add a spot or select + to generate a default spot.
3. Move the spot with the navigation buttons, or tap on the touch-screen to select a spot and move it.
4. Tap ☰ or Press Fn to modify temperature measurement parameters.

Parameters	Description
Emissivity	Set the emissivity of your target.
Distance	Set the distance between the target and the device.
Temp.	To display or hide the temperature measurement result.

5. Press ↺ to save and exit. The temperature of spot displays P1: XX.

NOTE

- **If the tool-specific emissivity and distance are set, the measurement is conducted based on the parameters. Otherwise, the parameters set from ⚙ →Temp. Settings are used for measurements.**

- **At most 3 custom spots are supported.**

6. Optional: Modify the set tools, hide or display the tools and measurement results, etc.

5.3.2 Rectangle Tool

1. Select .
2. Press MENU OK to add a rectangle or tap + to generate a default rectangle.
3. Move the rectangle to the required position.
   - Tap the rectangle, and press navigation buttons to move the rectangle up/down/left/right.
   - Tap and drag the rectangle on touch-screen to move it to the required position.
4. Adjust the size of the rectangle.
   - Tap one corner of the rectangle, and drag the corner to enlarge or contract the rectangle.
   - Tap and drag the corner of the rectangle on touch-screen to enlarge or contract it.
5. Tap to modify temperature measurement parameters.

Parameters	Description
Emissivity	Set the emissivity of your target.
Distance	Set the distance between the target and the device.
Max./Min./Average Temperature	Tap to enable the temperature types to display. The max. temperature, min. temperature, and average temperature of the rectangle area can be displayed on the left of the screen.

6. Press to save and exit. The temperature of rectangle displays R1: XX.

NOTE

- **If the tool-specific emissivity and distance are set, the measurement is conducted based on the parameters. Otherwise, the parameters set from →Temp. Settings are used for measurements.**
- **At most 3 rectangle tools are supported.**

7. Optional: Modify the rectangle tools, hide or display the tools and measurement results, etc.

5.3.3 Circle Tool

1. Select .
2. Press MENU OK to add a circle or tap + to generate a default circle.
3. Move the circle to the required position.
   - Tap the circle, and press navigation buttons to move the circle up/down/left/right.
   - Tap and drag the circle on touch-screen to move it to the required position.
4. Adjust the size of the circle.
   - Tap one point on the circle, and press navigation buttons to enlarge or contract the circle.
   - Tap and drag one point of the circle on touch-screen to enlarge or contract it.
5. Tap to modify temperature measurement parameters.

Parameters	Description
Emissivity	Set the emissivity of your target.

Distance	Set the distance between the target and the device.
Max./Min./Average Temperature	Tap to enable the temperature types to display. The max. temperature, min. temperature, and average temperature of the rectangle area can be displayed on the left of the screen.

6. Press to save and exit. The temperature of circle displays Cr1: XX.

NOTE

- **If the tool-specific emissivity and distance are set, the measurement is conducted based on the parameters. Otherwise, the parameters set from →Temp. Settings are used for measurements.**
- **At most 3 circle tools are supported.**

7. Optional: Modify the circle tools, hide or display the tools and measurement results, etc.

5.3.4 ΔT and ΔT Alarm

The imager identifies temperature anomalies more accurately and rapidly by comparing the temperature difference (Δ T) between measurement tools.

1. Configure at least one temperature measurement tool.
2. Select .
3. Add a ΔT tool.
   - Input a name for the ΔT tool.
   - Select Compared Object.
   - Set Alarming ΔT. When the detected ΔT is greater than the set alarming ΔT, device triggers alarms.
   - Tap OK to save the settings.

NOTE

- You can compare the temperature difference between different or the same measurement tools, between a measurement tool and a number, etc. If you select Number as a compared object, input the value manually.
- At most 4 Delta T are supported.

4. Optional: Modify the ΔT tools, hide or display the tools and measurement results, etc.
5. Press ↺ to save and exit.
6. Enable **ΔT Alarm**。
   - Go to ⚙ → Temp. Settings → **ΔT** Alarm.
   - Tap to enable ΔT Alarm.

NOTE

If you do not enable ΔT Alarm, the alarm linkages also take effect, but the ΔT alarm information will not be uploaded to the center.

5.3.5 Reset Measurement Tools

1. To clear all measurement tools, go to ⚙→More Config→Device Initialization→Remove All Measurement Tools.
2. A pop-up message "**Setting Succeeded**" will appear.

5.4 Alarm Configuration

Configure the alarm rule and the imager will alarm when the detected temperature triggers the rule.

NOTE

- Before using alarm trigger, please first turn on Alarm in Usage Scene. Otherwise, alarm trigger will not be visible in the settings interface.
- Only some scenes support the alarm function.

Imager with Usage Scene

1. In real-time interface, go to ⚙→**Usage Scene** to select a scene.
2. In **Usage Scene** setting interface, tap **Alarm Config**.
3. Enable **Temperature Alarm** button.
4. Tap **Measurement** to configure an alarm rule. Set your desired temperature threshold under **Alarm Threshold**. The imager triggers an alarm when the target's temperature exceeds or falls below this preset value.
5. Tap < to save and exit.

The temperature value displayed in the top-left corner of the real-time interface changes color based on threshold alerts: red when exceeding the upper limit, blue when falling below the lower limit.

6. (Optional)Go back to **Settings** → **Alarm Trigger** and enable different alarm types.

- **Flashing Alarm**: The flash light flashes when the target temperature exceeds the alarm threshold (only supported by certain models).
- **Audible Warning**: The imager beeps when target temperature exceeds the alarm threshold.

Imager without Usage Scene

1. In real-time interface, press MENU OK to reveal the menu.
2. Go to ⚙ → **Temp. Settings** → **Alarm Config**.
3. Turn on alarm button.
4. Navigate to **Measurement** to configure an alarm rule. Set your desired temperature threshold under **Alarm Threshold**. The imager triggers an alarm when the target's temperature exceeds or falls below this preset value.
5. Press ↺ to save and exit.

The temperature value displayed in the top-left corner of the real-time interface changes color based on threshold alerts: red when exceeding the upper limit, blue when falling below the lower limit.

6. Display Configuration

6.1 UIRA-IR Configuration

UIRA-IR is a more advanced technology than **Edge Enhance**, improving object edges for clearer image quality in both real-time viewing (for some models) and captured snapshots. Actual performance may vary by model.

- **Real-time View**: When **UIRA-IR** is enabled, supported models enhance object contours during real-time viewing.
- **Pictures**: **UIRA-IR** sharpens object outlines in captured pictures after enabling the function.

UIRA-IR is enabled by default. To disable it, go to → UIRA-IR to turn it off.

NOTE

UIRA-IR is only supported by certain models. Always refer to your imager.

6.2 Image Mode Configuration

You can configure the imager's thermal/visual display mode. The selectable options include **Thermal**, **Fusion**, **PIP**, **Blending, and Visual** modes.

NOTE

***Fusion, PIP, Visual, and Blending Mode are only supported by certain models. Always refer to your imager.**

1. In real-time interface, go to to select an image mode.

Icon	Mode	Description

	Thermal	The imager presents the thermal imaging view.
*	Fusion	The imager shows thermal images with visual outlines. This function is only supported by models equipped with a visual lens.
*	PIP	The imager shows the thermal image within the visual image.
*	Blending	The imager merges thermal and visual image. The balance between thermal and visual elements can be adjusted.
*	Visual	The imager shows visual images only.

2. Press to save and exit.

6.3 Switch and Manage Palettes

Palettes are color combination standing for different temperatures. Device offers several kinds of palettes serving different purposes. You can switch and manage frequently used palettes.

Steps

1. In real-time interface, go to to select a palette.
2. Optional: Select to show all supported palette types.
3. Optional: Select to set frequently used palettes.
4. Select a palette type and press MENU OK to switch.

Common Palettes

When you select a common palette type, the whole live image switch to

the selected color combination.

NOTE

Common Palettes are allowed to be reversed through Settings > Capture Config > Reversed Palette. Colors representing high and low temperature display in reverse order.

Focus Mode Palettes

NOTE

Focus Mode Palettes are only supported on some models. Always refer to your imager.

Focus Mode Palettes enable the user to highlight targets within a specified temperature range using flame palettes, while all other targets are displayed in bright palettes.

1. Select from the main menu.
2. Tap the icons to select an alarm rule type.

Icon	Mode	Description
	Above Focus	Set the temperature threshold, and the targets with the temperature higher than the set value are displayed with fusion palettes.
	Below Focus	Set the temperature threshold, and targets with the temperature lower than the set value are displayed with fusion palettes.
	Interval Focus	Set the temperature range (e.g., 90 °C to 150 °C), and targets in the range are displayed with fusion palettes.

3. Set a temperature range.
   - Tap ^ or v to switch between upper limit and lower limit. Tap < or > to adjust the temperature.
   - Tap on the screen to select an interest area. The device automatically adjusts the upper and lower temperature limit of the selected scene. Tap < or > to fine-tune the temperature.
4. Press ↺ to save and exit.

Alarm Mode Palettes

NOTE

Alarm Mode Palettes are only supported on some models. Always refer to your imager.

Alarm Mode Palettes allow the user to mark targets within a certain temperature range with a designated color, while the remaining targets are shown in bright palettes. Refer to for instructions.

1. Select from the main menu.
2. Tap the icons to select an alarm mode palette type.

Icon	Mode	Description
	Above Alarm	Set the alarm temperature, and the targets with the temperature higher than the set value are displayed in red.
	Below Alarm	Set the alarm temperature, and targets with the temperature lower than the set value are displayed in blue.
	Interval Alarm	Set the alarm temperature section (e.g., 90 °C to 150 °C), and targets with the

		temperature in the range are displayed in yellow.

3. Set a temperature range.
   - Tap ∧ or ∨ to switch between upper limit and lower limit. Tap < or > to adjust the temperature.
   - Tap on the screen to select an interest area. The device automatically adjusts the upper and lower temperature limit of the selected scene. Tap < or > to fine-tune the temperature.
4. Press ↺ to save and exit.

6.4 Color Display

The **Color Display** function delivers varied imaging effects. Both linear and histogram color display modes are selectable, tailored to specific application requirements.

1. In the real-time interface, press MENU OK and go to ⚙ → **Usage Scene** → **Color Display**.
2. Select a color distribution mode.

Mode	Description
Linear	Linear mode is employed to identify minor high-temperature targets within a low-temperature background. Its linear color display amplifies and highlights additional details of these high-temperature objects, making it well-suited for inspecting small defective hot spots.

Mode	Description
Histogram	Histogram mode is utilized for analyzing temperature distribution across broad areas. The histogram color display enhances high-temperature targets while retaining some details of low-temperature objects in the region, which proves effective for detecting small low-temperature anomalies.

3. Press to save and exit.

6.5 Level & Span Configuration

Adjust the level & span parameters to get better image contrast.

1. In the real-time interface, press MENU OK and go to → **Usage Scene** → **Level & Span**.
2. Select **Setting Mode**, and press MENU OK to switch auto and manual adjustment.

Mode	Description
Auto	Enabling **Auto** mode can automatically adjust the display temperature range.
Manual	In **Manual** mode, choose **Parameters** to access the settings interface. ● Press < or > to lock or unlock the maximum and minimum temperature settings, and press ∧ or ∨ to adjust any unlocked values. ● Alternatively, unlock both the maximum and minimum temperatures and press ∧ or

	∨ to increase or decrease either value individually while preserving the same temperature range. You also have the option to enable **Persist Saved**. ● **Persist Saved**: The current manual mode settings will be saved and restored after the imager restarts. ● **Temp Saved**: The settings will not be saved upon restart, and the imager will revert to automatic mode.

3. Press ↺ to save and exit.

NOTE

Persist Saved is only supported by certain models. Always refer to your imager.

6.6 Digital Zoom Configuration

NOTE

Digital Zoom is only available on certain models. Always refer to your imager.

1. In real-time interface, press ∨ button to enter zooming mode.
2. Press or hold < or > button to zoom out/in.
3. Press ↺ to save and exit.

6.7 Screen Brightness Configuration

- Use buttons: Go to ⚙ → **Display Config** →**Screen Brightness**, and press/hold < or > to change the level.
- Touch control: In real-time interface, swipe from screen top to call the menu. Tap on ☀ and swipe up and down to change the brightness.

6.8 Unit Configuration

Go to ⚙ → **Display Config** → **Unit** to set the **Temp.** unit and **Distance** unit.

6.9 On-Screen Info Configuration

Go to ⚙ → **Display Config** to turn on/off the information on-screen display.

- **Status Icon**: The device status icons, for example, battery status, memory card, hotspot, etc.
- **Parameters**: Temperature measurement parameters.
- **Temperature Scale**: Display the palettes bar and temperature range on the right side of the screen.
- **Time and Date**: Device time and date.
- **Humidity*:** Display the relative humidity of current environment.

7. Pictures and Videos

NOTE

Image capture and video recording are unavailable when the menu is displayed or the imager is connected to a PC.

7.1 Capture Pictures

You can capture pictures in real-time interface and a thumbnail of the picture will be displayed. The pictures will be automatically saved in the album. In the real-time interface, you can press and release the trigger to capture pictures.

You can also set the following parameters in ⚙ → Capture Config before capturing pictures.

NOTE

- If the environment is dark when capturing a visual picture, you can turn on the flashlight for illumination. Flashlight is only available on certain models. Always refer to your imager.
- You cannot capture pictures when the imager is connected with PC.
- Button Control imager only supports configure File Naming.

Parameters	Description
Capture Mode	• **One Picture**: Press the trigger once to capture one picture. • **Capture Plan**: Configure **Interval** (the time gap between each picture to be taken) and **Number** (the number of pictures to be captured in sequence, from 1 to 10,000) for scheduled capture. Press the trigger in real-time interface, and the

	imager captures the specified number of pictures according to the configured interval. Press the trigger again to stop capturing.
Save Visual Image	To save a visual image independently, you can enable **Save Visual Image** (this function is only supported by models equipped with a visual lens).
File Naming*	Files can be named using **Time Stamp** or **Numbering**.
Filename Header	Define file naming conventions. Default naming uses **Filename Header** + **Time Stamp**. ● Filename header is customizable. ● Time stamp reflects the imager's system time at capture.
Flashlight	Turn on/off the light while capturing or recording.
Edit before Saving	In capture One Picture mode, enable **Edit before Saving** to modify the captured picture immediately. ● Text Note: 1. Choose Text Note to enter the editing interface. 2. Tap the screen to add content. 3. Tap ✓ to save.

	● QR Code Note: 1. Select **QR Code Note** to switch the imager to scanning mode. 2. Align the scanning frame with a QR code. The imager will automatically read and save the code's information. 3. (Optional) If scanning fails, manually enter the Asset ID using the on-screen keyboard.
Reversed Palettes	Common palettes are allowed to be reversed. Colors representing high and low temperature display in reverse order.

7.2 Record Videos

NOTE

If the environment is dark when capturing a visual picture, you can turn on the flashlight for illumination. Flashlight is only available on certain models. Always refer to your imager.

1. Hold the trigger in real-time interface. When the recording icon and time display in the interface, recording begins, and you can release the trigger.
2. Press the trigger completes the recording. The imager will display a pop-up notification saying "Recording Succeeded". The recording video will be saved.

7.3 View Pictures and Videos

1. Press to enter **Pictures**.
2. Tap an album, and choose the picture or video.
3. View the selected file and associated information.

NOTE

- Files are organized chronologically, with the newest appearing at the top. If you cannot find recently captured pictures or videos, check your camera's time and date settings. Refer to 9.1 Time and Date Configuration for detailed instructions.
- Some models cannot playback the video, please export the video to PC for playback.

7.4 Manage Files

Task	Operations
Delete a File	1. Tap to enter **Pictures**, and open the target album. 2. Select the file to be deleted. 3. Tap the screen to show the menu bar below, then tap . 4. Tap **OK** in the confirmation dialog.
Delete Multiple Files*	1. Tap to enter **Pictures**, and open the target album. 2. Within the album, tap , then select the files to be deleted. 3. Tap . 4. Tap **OK** in the confirmation dialog.
Move a File*	1. Tap to enter **Pictures**, and open the target album. 2. Select the file to be moved. 3. Tap the screen to show the menu bar below, then tap . 4. Select the target album from the list.

Move Multiple Files*	1. Tap to enter **Pictures**, and open the target album. 2. Within the album, tap , then select the files to be moved. 3. Tap . 4. Select the target album from the list.
Attach Text Note*	1. Tap to enter **Pictures**, and open the target album. 2. Select the file to be edited. 3. Tap the screen to show the menu bar below, then tap . 4. Input the text note. 5. Tap to complete.
Attach QR Code Note*	1. Tap to enter Pictures, and open the target album. 2. Select the file to be edited. 3. Tap the screen to show the menu bar below, then select . 4. Scan the QR Code, and the imager will record the code information. 5. (Optional) If the scanning fails, input the code (Asset ID) manually with soft keyboard.

NOTE

- * functions are only available on certain models. Always refer to your imager.
- After , you can tap / to select or deselect all files within an album.

7.5 Manage Albums

NOTE

Manage albums is only available on certain models. Always refer to your imager.

Recorded image and video files are stored in **Pictures**. You can manage albums by creating, renaming, setting as default, or deleting them.

Task	Operations
Create a New Album	1. Tap to enter **Pictures**. 2. Tap + to create a new album. 3. Input the album name. 4. Tap ✓ to complete. **NOTE** **The newly created album becomes the default saving album and is displayed at the top of the Pictures.**
Rename an Album	1. Tap to enter **Pictures**. 2. Choose the album to rename. 3. Tap •••, then choose **Rename**. 4. Input the new album name. 5. Tap ✓ to complete.
Set Default Saving Album	1. Tap to enter **Pictures**. 2. Choose the album to set as default saving location. 3. Tap •••, then choose **Set as Default Album**. **NOTE**

	The default saving album is displayed at the top of the Pictures.
Delete an Album	1. Tap to enter **Pictures**. 2. Choose the album to delete. 3. Tap •••, then choose **Delete**. 4. Tap **OK** in the confirmation dialog. **NOTE** Deleting an album also removes all files within it. Transfer files to other albums if needed. Refer to **7.4 Manage Files** for detailed instructions.

7.6 Export Pictures and Videos

1. Connect the imager to your PC with the included USB cable, and select **USB Drive** mode in the prompt on imager.
2. Open the detected disk, copy and paste the files to PC to view the files.
3. Disconnect the imager from your PC.

NOTE

For the first connection, the driver will be installed automatically.

8. Device Connection

8.1 Connect via Hotspot (If Applicable)

NOTE

Remember download and install the APP on your phone before using the function.

1. In the real-time interface, press MENU OK and go to **Settings** → **More Config** to enable **Hotspot**.
2. On the APP, tap **Add** in the middle of the screen to add imager. Or tap > to **Scan QR Code**.
3. Scan the hotspot QR code of the imager.
4. Add imager following the steps:

Initial Connection

1. Tap **Join** to join the imager hotspot.
2. Press **OK** on the imager to confirm the connection authentication.

Reconnection

1. Tap **Connect** in device interface on the home page.
2. Tap **Join** to join the imager hotspot and automatically connect to the device.

NOTE

- **The path of your imager may vary according to different products. Always refer to the actual product interface.**
- **If you have changed the hotspot password, rescan the hotspot QR code.**
- **If the APP fails to connect to your imager, please disconnect your mobile device's Wi-Fi and try it again.**

After adding the imager to the APP, you can view the connected imager information on the home page.

8.2 Connect to Cast Screen

You can connect the device to your PC via a supplied USB cable to start live view, taking snapshots, recording, etc.

NOTE

Download and install the latest version of Accu Studio on your PC. You can get the installation package through the official website www.accumems.com.

1. Launch Accu Studio.
2. Use the supplied USB cable to connect the imager (powered on) to a PC USB port.
3. On the imager's pop-up menu, select **USB Cast Screen**.

NOTE

Connection failure or imager not displaying a pop-up window. Please check the USB connection or restart the imager.

4. Select **Imager** (top-left) to view detected devices.
5. Select a device and click Connect to begin live view.

NOTE

During live view, if you switch to other tabs, choose Background to keep streaming.

6. Click **Disconnect** to stop streaming.

NOTE

- **The client detects multiple USB devices but streams from one device at a time.**
- **Avoid plugging in or unplugging other USB devices during streaming.**

9. Maintenance

9.1 Time and Date Configuration

In the real-time interface, press MENU OK and go to ⚙ → More Config → Time and Date to configure the information.

9.2 Flashlight

- Use buttons: In real-time interface, press ^ to turn on/off the light
- Touch control: In real-time interface, swipe from screen top to call the menu. Tap to turn on/off the light.

9.3 Fn Key Configuration

In the real-time interface, press MENU OK and go to ⚙ → More Config → Fn Key Config to configure the function. In real-time interface, press Fn to switch image mode, palettes, calibration, and usage scene.

NOTE

Only some models support configuring the usage scene and image mode. Always refer to your imager.

9.4 Storage Configuration

In the real-time interface, press MENU OK and go to ⚙ → More Config → Storage to configure the storage path.

- Button Control Only: files can be saved to the device's local storage or to the memory card.
- Touch Screen: files can be saved to the memory card Only.

NOTE

Local storage is only supported on some models. Always refer to your imager.

9.5 View Imager Information

In the real-time interface, press MENU OK and go to ⚙ → More Config → **About** to view the detailed information of the imager.

9.6 Logs Configuration

The imager can retain its operational logs for troubleshooting purposes. Press MENU OK and go to ⚙ → More Config → **Save Logs** to enable or disable this function.

To export logs:

1. Connect the imager to a PC using the included USB cable.
2. Set the imager's USB mode to **USB Drive**.
3. Access operation logs in the imager's root directory.

9.7 Upgrade

Before upgrade, download the upgrade file first. You can get the upgrade file through technical support.

1. Connect the imager to your PC via the included cable, and select **USB Drive** as the USB mode in the prompt on the imager.
2. Copy the upgrade file and replace it to the root directory of the imager.
3. Disconnect the imager from your PC.
4. Reboot the imager and then it will upgrade automatically. The upgrading process will be displayed in the main interface.

NOTE

After the upgrading, the imager automatically reboot. You can view the current version in More Config → About.

9.8 Format Memory

1. In the real-time interface, press MENU OK and go to ⚙ → More Config → Device Initialization → Format Memory Card.
2. Press MENU OK to start formatting storage.

9.9 Restore Imager Configuration

In the real-time interface, press MENU OK and go to ⚙ → More Config → Device Initialization → Restore Device to initialize the imager and restore default settings.

10. Guidance for Common Thermal Imaging Operations

The manual provides guidance on common issues for first-time users of imagers. For other questions or updated guidance, please contact technical support.

10.1 Can the UIRA-Scene Algorithm Detect Water Leaks, Insulation Issues or Heat Irregularities with 100% Accuracy?

No, it does not achieve 100% accuracy. The UIRA-Scene algorithm is designed for preliminary screening by analyzing thermal image characteristics in various scenarios, based on clear images captured by users. If an area is marked as "Suspect," we recommend manual verification by professionals. Additionally, keeping your imager's firmware updated ensures access to the latest algorithm enhancements.

10.2 Factors may Interfere with the Detection Results of UIRA-Scene

Different wall materials and surrounding heat sources

- Heat diffusion properties of different wall materials:

Some wall materials exhibit heat diffusion patterns that resemble common wall defects, making it necessary for experienced professionals to conduct further verification.

- Interference from ambient heat sources (e.g., heaters or air conditioning vents):

External heat sources may cause localized temperature increases on wall surfaces, affecting detection accuracy.

10.3 Improve Water Leak Detection Success Rates

Method

1. Adhere to recommended leak area and detection distance guidelines. Ensure the leak area and detection distance match your imager's IR resolution.

For example:

IR Resolution	Distance	Leak Area
96×96	≤ 1m	≥ 10cm×15cm
96×96	≤ 2m	≥ 20cm×30cm
256×192	≤ 2m	≥ 10cm×15cm
256×192	≤ 4m	≥ 20cm×30cm

Check your imager's IR resolution under Specification.

2. Perform multiple inspections and dynamic comparisons:

Relying on a single thermal image may lead to errors. Compare images taken at different times (e.g., day vs. night), under varying temperature conditions, or from different angles. You can also observe the same area dynamically.

10.4 Higher-Quality Image

How to Take Clear Thermal Imaging Pictures?

Principle

Thermal image use colors to show temperature distribution. The

temperature range of the target affects the image effect.

Method

1. When the actual temperature difference of the target in the image is higher than 10 °C (50 °F) or 20 °C (68 °F), the thermal image effect is most obvious, which helps to highlight the subtle temperature difference.
2. When the temperature difference of the target in the image is small, you can manually adjust the temperature range (if applicable) of the whole image to increase the contrast of the target.
3. It is recommended that the distance between the imager and the target should be within 2 meters (about 6.56 feet). Adjust the distance to ensure clear focus, especially for small targets.
4. Select an appropriate palette for the scene to get an image with high contrast.

10.5 Guidance on Using Thermal Imaging for Common Water Leak Detection

Principle

Water has a higher specific heat capacity than building materials, so the temperature change rate of the leaking area is different from that of the surrounding materials. The thermal imager captures this temperature difference to locate the leak point contactlessly.

Tips

1. Best Testing Time Period: Choose sunrise or sunset for testing. At this time, the temperature difference between indoors and outdoors is usually over 10 °C (50 °F), and the solar radiation heat gradient makes the thermal imaging of leak points inside the wall more obvious.

2. Environmental Condition Control: The surface temperature should be tested in dry and sunny weather. Rain and snow will lower the surface temperature and interfere with the infrared signal, which will seriously affect the accuracy of detection.
3. Priority Detection Area: Scan the weak links of building structures such as wall corners, window and door edges, existing cracks, pipe-through wall holes, and connections, which are high-risk areas for structural water leakage and pipe water leakage.
4. Dynamic Verification: Avoiding false alarms caused by single-time capture results. In the periods with significant day and night temperature differences, or after adjusting different angles to capture the same area multiple times. Dynamic verification can be used to exclude false alarms.

NOTE

- **Structural Leakage Test: Spraying water on the wall to simulate wetting, or testing the residual water-stained area immediately after rain, can enhance the temperature difference contrast.**
- **Pipe Leakage Detection: For persistent water leakage, you need to take pictures during periods of water pressure changes (such as before and after peak water usage) and refer to the specific suggestions for pipe leakage detection.**
- **Micro Leakage: if the water leakage is very small and the temperature difference is not obvious, it is recommended to use imagers with higher sensitivity and resolution (such as ≤40 mK thermosensitivity and ≥256 × 192 resolution) to improve detection rate.**

10.6 Detect Water Pipe Leaks

- How to Use Thermal Imaging for Hot Water Pipe Leaks?

Principle

When hot water pipes leak, heat energy will conduct to the surface of buildings, and the leaked area will show as a high-temperature region

(usually in red or highlighted color) on the thermal image, which can help you locate the leakage point.

Tips

1. Time Selection: Select sunrise or sunset time when the environment temperature changes significantly and helps to enhance the temperature difference effect.
2. Pressure Verification: Use the pipe pressure tester to monitor the pressure change. If the pressure continues to decrease after pressurization, it can be preliminarily confirmed that there is a leak.
3. Temperature Difference Enhancement: Ensure the hot water temperature is at least 10°C higher than the room temperature and maintain the flow for 15-30 minutes. Under this condition, a detectable temperature difference can be formed in concrete, wood boards, or gypsum boards with a penetration depth of 3-5cm.
4. Pathway Tracking: System scans along the hot water pipe route, focusing on high-risk parts such as interfaces, valves, and wall-penetrating holes, as well as historical maintenance records.

NOTE

The detection effect is influenced by water temperature (must be 10 °C higher than the indoor temperature), pipe burial depth (concrete or dense materials over 5 cm deep may affect imaging), and contact material (wooden boards or gypsum boards can be detected). This method is applicable to contact heat transfer scenes. When pipes have no physical contact with building structures or when leakage water cannot penetrate to the surface, it will not be possible to detect due to lack of temperature difference contrast.

- How to Use Thermal Imaging for Detecting Leaks in Cold Water Pipes?

Principle

Cold water leakage causes heat conduction to the wall, which results in

a lower temperature than that of the surroundings. The thermal imager captures the temperature difference and displays it as a low-temperature area (usually in blue).

Tips

1. Time Selection: The temperature difference between cold water and indoor temperature is usually small, and it is difficult for the temperature to conduct to the surface. You can select sunrise or sunset for testing, as the natural temperature difference can help enhance the contrast.
2. Pressure Verification: Use a pressurizing imager to monitor the pressure of the pipe. If the pressure continues to drop, it can help confirm that a leak exists.
3. Operation in Winter: After preheating the wall and floor in the heating environment, continuously supply cold water to the cold water pipe to create a significant temperature difference.
4. Operation in Summer: Inject cold water into the cold water pipe during the low-temperature sunrise hours to enhance the test effects by leveraging the temperature difference between the environment and the water.
5. Temperature Difference Strengthening Method: Pour hot water into the cold water pipe and keep it for 15 minutes (refer to the hot water pipe testing tips), which can quickly generate a recognizable temperature difference.

NOTE

The detection effect is influenced by water temperature (must be 10 °C higher than the indoor temperature), pipe burial depth (concrete or dense materials over 5 cm deep may affect imaging), and contact material (wooden boards or gypsum boards can be detected). This method is applicable to contact heat transfer scenes. When pipes have no physical contact with building structures or when leakage water cannot penetrate to the surface, it will not be possible to detect due to lack of temperature difference contrast.

10.7 Can the Thermal Imager Penetrate Walls or Floors?

No. Thermal imagers cannot penetrate walls or floors like X-ray machines. They can only detect heat emitted from the surface of an object. However, in certain cases, the thermal imager can detect anomalies inside walls or floors, such as water pipe leakage or heat loss due to poor insulation. This is because the thermal imager can capture the heat conducted to the surface of the wall or floor. If the pipe has no contact with the wall or ground, the temperature cannot be conducted, and the thermal imager cannot detect it.

10.8 Check a Thermal Imager's Temperature Accuracy

How to test the accuracy of the imagers?

Tips

1. Pour crushed ice and water into the cup, and turn on the imager.
2. Mix the solution and let it stand for a few minutes.
3. Set the imager's emissivity to 0.95 and adjust the distance.
4. Point the imager at the solution to measure its temperature. To get the best effect, please measure the temperature of water surface and avoid measuring cup wall. The reading should be close to the freezing point (0 °C / 32 °F) and within the precision range.

10.9 Frozen Images

What are the clicking sound and frozen image after imager startup?

This is a normal phenomenon of the thermal imaging imager. To keep the measurement accuracy, the imager will automatically calibrate the environment temperature change. During this process, the screen may stutter and show "Image Calibrating...", and you can also hear a "click" sound from the imager. This phenomenon usually occurs when the

imager is moved quickly or when it is turned on for the first time.

10.10 Prolong Battery Life

How to extend the life of lithium batteries?

Tips

1. Initial Charging: Charge the imager for 3 hours in the off state before first use.
2. Charging Cable: Use the included charging cable or an authenticated one.
3. Power Adapter: For best results, use a standard 5 V/2 A charger.
4. Storage and Reuse: When storing the imager for a long time, charge it to full capacity every 3 months. Before using the imager after storage, turn off the imager and charge it for at least 30 minutes.

REGULATORY INFORMATION

FCC Compliance Statement

Please take attention that changes or modification not expressly approved by the party responsible for compliance could void the user's authority to operate the equipment.

This device complies with Part 15 of the FCC Rules. Operation is subject to the following two conditions:

(1) This device may not cause harmful interference, and

(2) This device must accept any interference received, including interference that may cause undesired operation.

Caution: Any changes or modifications not expressly approved by the party responsible for compliance could void the user’s authority to operate this equipment.

This equipment complies with FCC radiation exposure limits set forth for an uncontrolled environment.

Note: This product has been tested and found to comply with the limits for a Class B digital device, pursuant to Part 15 of the FCC Rules. These limits are designed to provide reasonable protection against harmful interference in a residential installation. This product generates, uses, and can radiate radio frequency energy and, if not installed and used in accordance with the instructions, may cause harmful interference to radio communications. However, there is no guarantee that interference will not occur in a particular installation. If this product does cause harmful interference to radio or television reception, which can be determined by turning the equipment off and on, the user is encouraged to try to correct the interference by one or more of the following measures:

—Reorient or relocate the receiving antenna.

—Increase the separation between the equipment and receiver.

—Connect the equipment into an outlet on a circuit different from that to which the receiver is connected.

—Consult the dealer or an experienced radio/TV technician for help.

AccuMEMS

OFFICE

Hangzhou Accumems Technology Co., Ltd.
www.accumems.com

Office Address

Room 418-1, Building 2, JinxiuLinglongfu,
Xixing Street, Binjiang District,
Hangzhou City, Zhejiang Province

GuidePost

Firmware Upgrade

AccuMEMS