AT1
Smart Distribution Panel

User Manual V2.2

Important Instructions

For optimal performance, **update your unit to the latest firmware before first use.**

See the appendix "Update Firmware via BLUETTI App" for guidance.

Read and understand this manual before use and keep it handy for future reference.



Legal Information

Copyright © 2025 Shenzhen PowerOak Newener Co., Ltd. All rights reserved.

No part of this document may be reproduced or transmitted in any form or by any means without the prior written consent of Shenzhen PowerOak Newener Co., Ltd.

Note: AT1 supports an optional 4G module. For AT1S, the 4G module, antenna, and adapter cable are in the package. All other hardware components are identical.

Notice

BLUETTI's products, services, and features are subject to the agreed-upon terms and conditions during purchase. Please note that some products, services, or features described in this manual may not be available under your purchase contract. Unless otherwise specified in the contract, BLUETTI makes no representations or warranties of any kind, express or implied, with respect to the contents of this manual.

The contents of this manual are subject to change without notice. Please get the latest version from: https://www.bluettipower.com/pages/user-guides

If you have any questions or concerns about this manual, please contact BLUETTI support for further assistance.

Shenzhen PowerOak Newener Co., Ltd.

F19, BLD No.1, Kaidaer Tongsha Rd No.168, Xili Street, Nanshan Shenzhen China

Website: https://www.bluettipower.com/

Symbol Conventions

This manual uses the following symbols to highlight important information:

	**Danger** It indicates a hazardous situation which, if not avoided, will result in death or serious injury.
	**Warning** It indicates a hazardous situation which, if not avoided, could result in death or serious injury.
	**Attention** It indicates a potentially hazardous situation which, if not avoided, could cause substantial damage to property and the environment.
	**Instruction** It contains important additional information as well as useful tips for safe, efficient and hassle-free operation of the ATI smart distribution panel.

Contents

1. Safety Information 05
   1.1 Important Guidelines 05
   1.2 Instructions Pertaining to Risk of Fire, Electric Shock, or Injury to Persons 06
   1.3 Usage Guidelines 06
2. Packing List 07
   2.1 What's in the Box 07
   2.2 What You'll Need 07
3. Introduction 08
4. Key Features 09
5. Working Modes 11
   5.1 Backup Mode (Default) 11
   5.2 Self-consumption Mode 12
   5.3 Time of Use Mode 12
   5.4 Custom Mode 13
6. Overview 14
   6.1 User Panel 14
   6.2 Electrician Panel 15
   6.3 LED Indicators 16
   6.4 Signal Panel 16
7. Installation 18
   7.1 Applications 18
   7.2 Before You Install 19
   7.3 Prepare the Necessary Tools 20
   7.4 Mounting the AT1 22
   7.5 Breaker Installation 28
   7.6 Cable Installation 30
   7.7 System Wiring 34
   7.8 Other Components 49
8. System Commissioning 51
9. Specifications 52
10. Troubleshooting 53
FAQs (Frequently Asked Questions) 53
Appendix 54
Compliance 56

1. Safety Information

Before using this product, please read the manual carefully and follow all safety instructions. Pay close attention to the Dangers, Warnings, Attentions, Notes, and other safety labels in the manual and on the product itself. If you have any questions or encounter a situation not addressed in this manual, please contact us. Improper use or unauthorized operation may result in damage or injury, which is not covered by the warranty.

1.1 Important Guidelines

For optimal performance and safety, please follow these essential guidelines:

- Always operate and store the product in the conditions specified in this manual.
- Ensure the product is used in compliance with all relevant standards and regulations.
- Avoid unauthorized modifications, disassembly, or software changes.
- Read all instructions and warnings for this product.

BLUETTI is not liable for the following situations or any resulting consequences:

- Damage caused by natural disasters, including earthquakes, fires, floods, storms, or mudslides.
- Damage that occurs during customer-handled transportation.
- Issues caused by improper storage or use outside the conditions specified in this manual.
- Damage caused by customer negligence, misuse, or intentional harm.
- Damage caused by third-party actions, including improper handling, usage, or installation not in line with this manual.
- Damage or issues caused by unauthorized repairs, adjustments, or removal of product labels.
- Damage or safety risks caused by using non-BLUETTI-approved devices to power this product.
- Accidents or safety concerns arising from using the product in critical applications, such as nuclear, aviation, or medical fields, where high reliability is essential for personal safety or operation.

1.2 Instructions Pertaining to Risk of Fire, Electric Shock, or Injury to Persons

	Danger
	To ensure safe operation, please follow the instructions below.

- Do not clean the product with water.
- Keep the product away from heat sources or high-temperature environments.
- Never use the product near open flames, explosive gases, or in environments with smoke, vapors, or other hazardous conditions.
- Do not operate the product while damp. Ensure the product is fully dry before use.
- Do not open or modify the product yourself. Only qualified personnel should perform repairs or replace parts using BLUETTI-approved components and cables to prevent the risk of fire, electric shock, or other personal injury.

1.3 Usage Guidelines

- Ensure all screws are securely tightened.
- Ensure the product is firmly installed before use.

SAVE THESE INSTRUCTIONS

2. Packing List

2.1 What's in the Box



AT1
Smart Distribution Panel

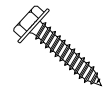

Phillips Hex Washer
Self-Tapping Screw
×4

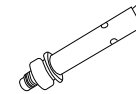

Expansion Bolt
×4

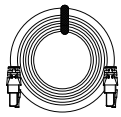

Ethernet Cable
(32.8 ft/10 m)



Antenna

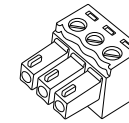

PCB Terminal Block



User Manual,
Warranty Card,
QC Certificate

2.2 What You'll Need

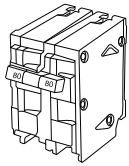

Circuit Breaker
(for AC-Coupled PV,
generator, smart load, ESS)

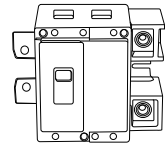

Circuit Breaker
(for grid and backup load)

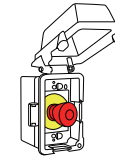

Rapid Shutdown Switch
(normally open)

3. Introduction

The AT1 smart distribution panel manages your home power system with a built-in energy management system (EMS), along with distribution and communication modules. Additionally, it seamlessly switches to backup power when needed.

Key Features

- Manages energy flow based on your settings.
- Shows input source status.
- Easy control via the BLUETTI app.

Overview

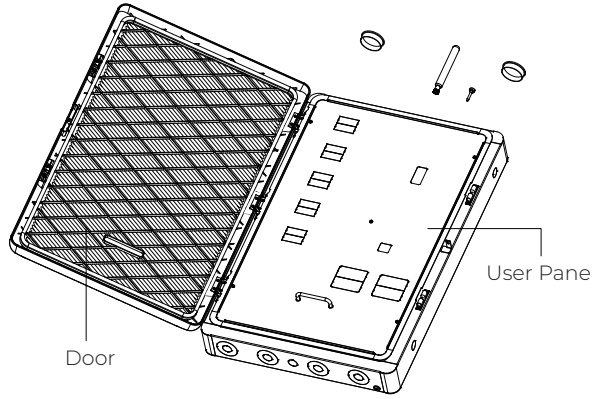

Fig. 3-1 AT1 smart distribution panel

4. Key Features

Extreme Weather Alert

When enabled, the AT1's energy management system (EMS) will notify you as soon as a weather alert is received from the cloud. You can choose how the system should respond:

- Activate Backup Mode: The system automatically switches to Backup Mode during the storm to prepare for possible outages. Once the weather clears, it will return to normal.
- No Action: If no response is given, the Backup Mode will turn on automatically.
- Decline Backup Mode: The system stays in its current mode. You'll still receive future alerts as long as this feature remains enabled.

Auto On/Off-Grid Switching

If the grid experiences instability (voltage or frequency issues), the AT1 seamlessly switches to off-grid mode. It powers your household appliances using solar, a generator (if connected), and stored energy from the energy storage system. Once the grid is restored, it automatically reconnects and intelligently balances energy from the grid, solar, and energy storage to keep your home running smoothly.

Maximize Solar Power

The AT1 prioritizes using AC-coupled solar power to run your home. If grid feed-in is enabled, any excess power charges the ESS battery, and the rest goes to the grid for possible earnings. If grid feed-in is off and the battery is full, AT1 will automatically stops the solar input to prevent any unintended power export to the grid.

Sleep Mode

If both grid and solar power are unavailable, and the ESS battery is fully drained, the AT1 will shut down and ESS will enter sleep mode, awaiting a restart.

Black Start

- Auto Black Start

The ESS can automatically restart after a full shutdown when certain conditions are met:
Grid Restored: The system automatically powers back on as soon as grid power returns.
DC-Coupled Solar Available: For models like the EnergyPro 13K, if DC-coupled solar input is active and the battery is in a normal state, the system will auto-start.
Sufficient AC-Coupled Solar Power: When solar energy is sufficient and both the ESS and AC-coupled solar system meet startup conditions, the system will automatically start if Black Start is enabled in the app. The AT1 will also activate AC-coupled solar system to power the system.

Generator Connected: If a generator is connected and allowed (via app settings) to charge the ESS during backup mode, the system will automatically start. Otherwise, the generator will power your loads during outages only.

If the system doesn't restart on its own and no errors are shown, you can also start it manually using the app.

• Manual Black Start

When the solar is sufficient, you can restart the system anytime via the BLUETTI app.

To begin:

1. Make sure the ESS breaker connected to your ESS is turned ON.
2. Set the AT1 backup load breaker to OFF to disconnect all loads, including those connected to the ESS.

Once the battery reaches at least 20% SoC, you can turn the AT1 backup load breaker back to ON and reconnect your loads.

Attention: If loads remain connected during startup, the battery may drop to 0% SoC and continue to discharge, which may cause irreversible damage.

Real-Time Power Management

The AT1 system can intelligently manage power from multiple sources—grid, generator, EV charger, and ESS—based on real-time load demand and system settings.

- When set to discharge first in Custom mode, the ESS delivers up to its maximum output. If your usage goes beyond that, the grid automatically covers the rest.
- If the ESS operates in off-grid and the battery drops below your set limit, the AT1 will automatically start the generator. It powers your home and recharges the battery based on your settings. Once the grid is back, AT1 smoothly switches over and turns off the generator.
- During an outage, the connected EV charger can keep your home running and may even recharge your ESS, depending on your setup.
- Smart loads can be powered by the grid, solar, or ESS via the smart load port. AT1 balanced the power output based on the current working mode.

5. Working Modes

The AT1 smart distribution panel supports four working modes. You can select your preferred mode in the BLUETTI app, based on your energy setup and daily needs.

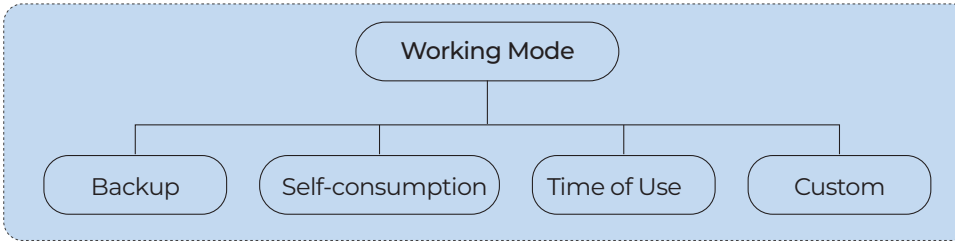

Instruction

The introduction highlights the key features and components of the AT1.

5.1 Backup Mode (Default)

In Backup Mode, the whole system acts as a reliable home backup power source that only kicks in when the grid fails. It prioritizes the use of solar energy over the grid to charge batteries, making it an environmentally friendly and sustainable choice for home energy plans. With ample energy reserves, it provides a seamless power supply, perfect for areas with unreliable grids.

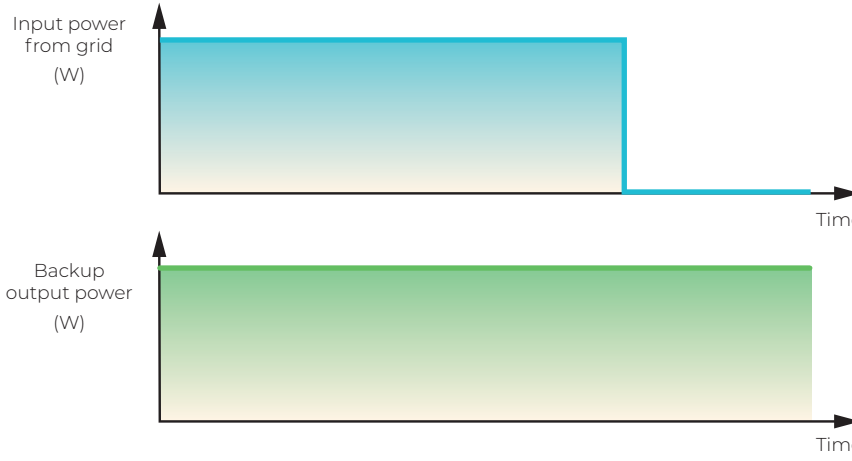

Fig. 5-1

5.2 Self-consumption Mode

In this mode, the AT1 prioritizes using solar energy directly to meet immediate household needs. Any surplus solar energy generated is intelligently stored in battery packs for use during peak hours or in case of a power outage. This approach ensures a reliable and efficient power supply, reducing dependence on the grid and promoting energy independence.

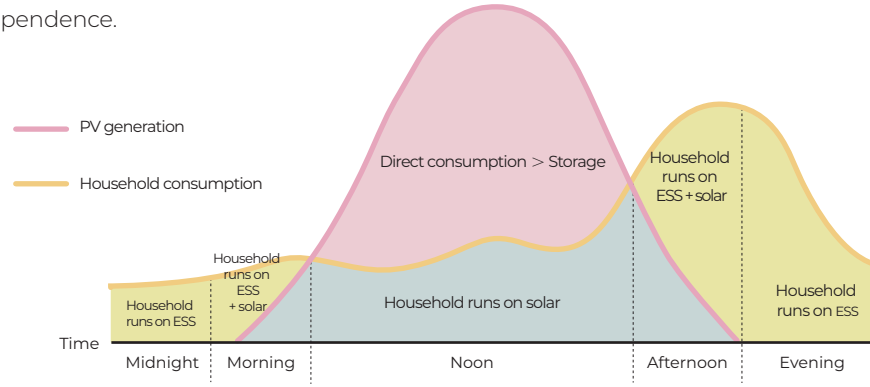

Fig. 5-2

5.3 Time of Use Mode

Optimized for regions with varying electricity costs and a reliable power grid, this mode allows users to customize charging schedules. When electricity rates peak, set the system to discharge, using solar and battery power to meet energy needs. Conversely, in low-rate periods, schedule the grid to charge the battery packs while using the solar energy and grid power to supply the needs. Users can also adjust State of Charge (SoC) limits to manage grid power use by the ESS while preserving battery capacity for solar energy. In off-grid scenarios, rely on solar and battery power to sustain the load.

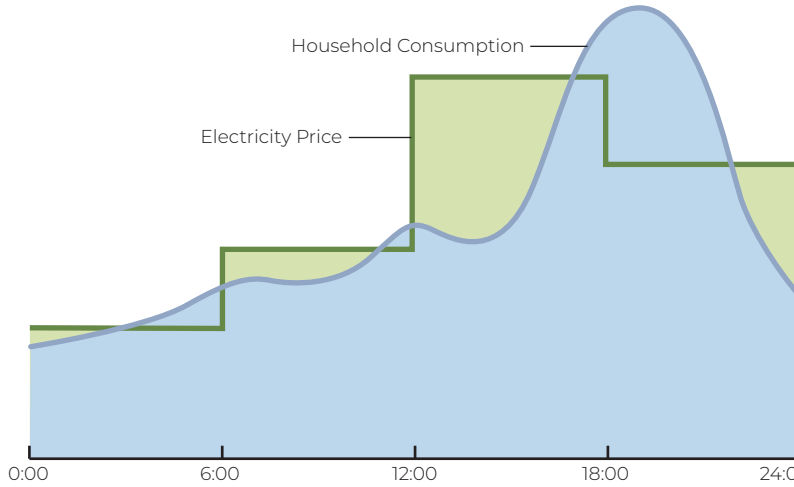

Fig. 5-3

5.4 Custom Mode

In this mode, users can set preferred SoC limits, discharge schedule, and whether to use grid charging or discharging. AT1 will automatically handle power distribution, battery charging, and solar allocation.

To feed the power into the grid, turn on the **Feed Into Grid** switch in the app and set your desired discharge power.

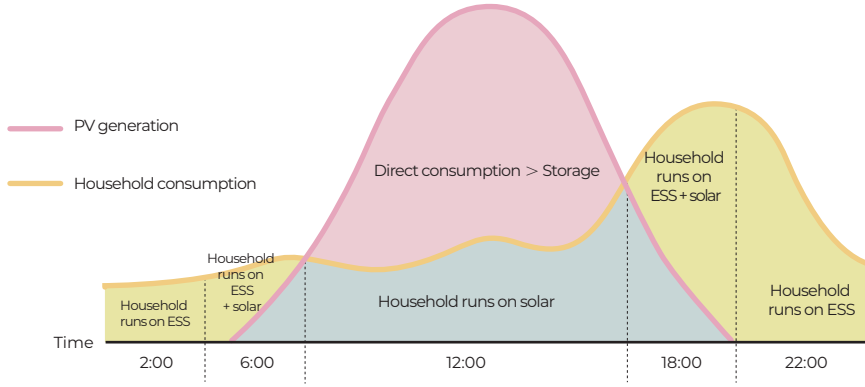

Fig. 5-4

6. Overview

6.1 User Panel

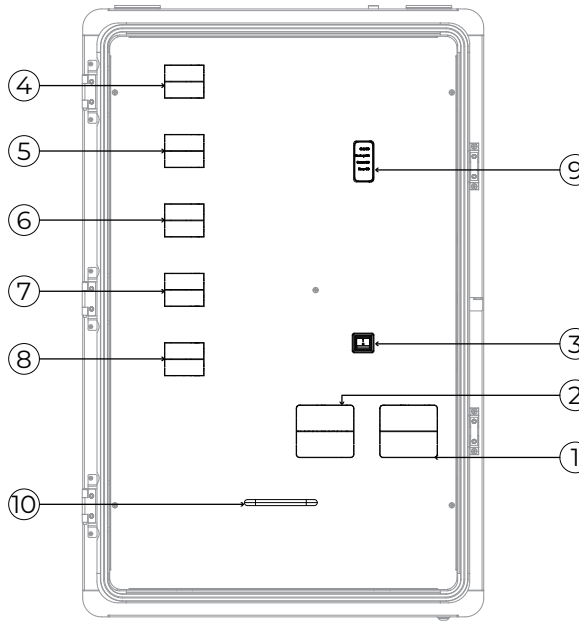

Fig. 6-1

① Grid Breaker Slot*

② Essential Load Breaker Slot* (Backup)

③ System Switch

④ AC PV Breaker Slot*

⑤ Generator Breaker Slot*

⑥ Smart Load Breaker Slot*

⑦ ESS Breaker Slot 1*

⑧ ESS Breaker Slot 2*

⑨ Indicators

⑩ Panel Handle

* To install a breaker, remove the knockout first. If unused, leave the knockout in place. If removed by mistake, simply re-cover it with a replacement slot cover (sold separately).

6.2 Electrician Panel

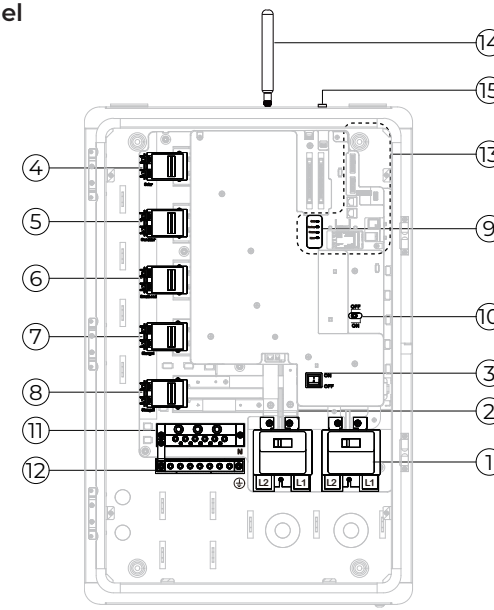

Fig. 6-2

① Grid Breaker*
② Backup Load Breaker*
③ System Switch
④ AC PV Breaker*
⑤ Generator Breaker*
⑥ Smart Load Breaker*
⑦ ESS Breaker 1*
⑧ ESS Breaker 2
⑨ Indicators
⑩ Grid ATS**
⑪ Neutral Busbar (N)
⑫ Ground Busbar (PE)
⑬ Signal Panel
⑭ WiFi & Bluetooth Antenna
⑮ 4G Antenna Port (Optional)

* Provided and installed by a licensed electrician.
** After power failure, the switch will automatically jump to the OFF position. Otherwise, it means that the equipment has failed and you need to manually switch it to the OFF position and check the equipment.

6.3 LED Indicators

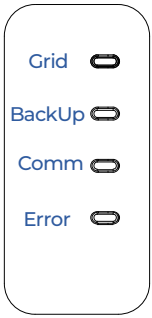

Fig. 6-3

Indicators	Status	Description
Grid (Green)	Steady	Grid power on
	Off	Grid power off
Backup (Green)	Steady	Backup power on
	Off	Backup power off
Comm (Green)	Quick flash with pauses	App Bluetooth connected
	Steady	App cloud connected
	Slow flash	Internet connected, app cloud not responding
	Rapid flash	Internet disconnected
Error (Red)	Rapid flash	Relay issue or protection
	Slow flash	Inverter issue
	Off	Normal operation

6.4 Signal Panel

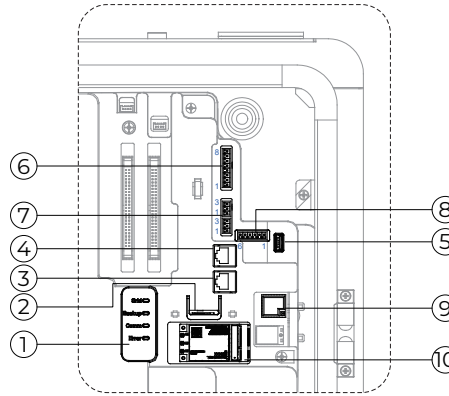

Fig. 6-4

① Indicators
② SIM Card Slot
③ ESS COM Port (RJ45)
④ Ethernet Port (RJ45)
⑤ USB Port
⑥ Dry Contact Terminal
⑦ RS485 Terminal
⑧ Digital Signal Terminal
⑨ WiFi & Bluetooth Chip*
⑩ 4G Module*

* External antenna required.

6.4.1 Dry Contact Terminal

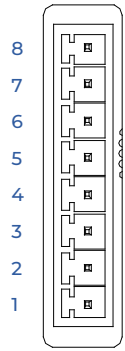

Fig. 6-5

No.	Name	Description
1	DO_1	Reserved ports – normally open; close when triggered
2		
3	DO_2	Reserved ports – normally open; close when triggered
4		
5	\	Floating terminal
6	NC	For generators only. By default, COMM is connected to NC and not to NO.
7	COMM	
8	NO	

6.4.2 RS485 Communication Terminal

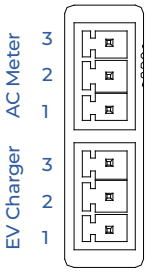

Fig. 6-6

Communication Device	No.	Name	Description
AC Meter	1	485A1+	Reserved for third-party meter
	2	485B1-	
	3	\	
EV Charger	1	485A2+	Reserved for third-party EV charger
	2	485B2-	
	3	\	

6.4.3 Digital Signal Terminal

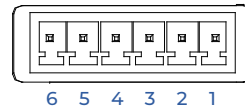

Fig. 6-7

No.	Name	Description
1	DI1+	Reserved ports
2	DI1-	
3	DI2+	Reserved ports
4	DI2-	
5	RSD+	Connect a normally open Rapid Shutdown Switch. Press to shut down all power circuits immediately.
6	RSD-	

7. Installation

7.1 Applications

The AT1 works with both whole-home and partial backup setups. Choose the one that fits your energy needs during installation.

• **Whole-Home Backup**

All household loads, except those on smart circuit, are routed through the main panel to the AT1's backup port. If the grid goes down, the ESS keeps your entire home stay powered.

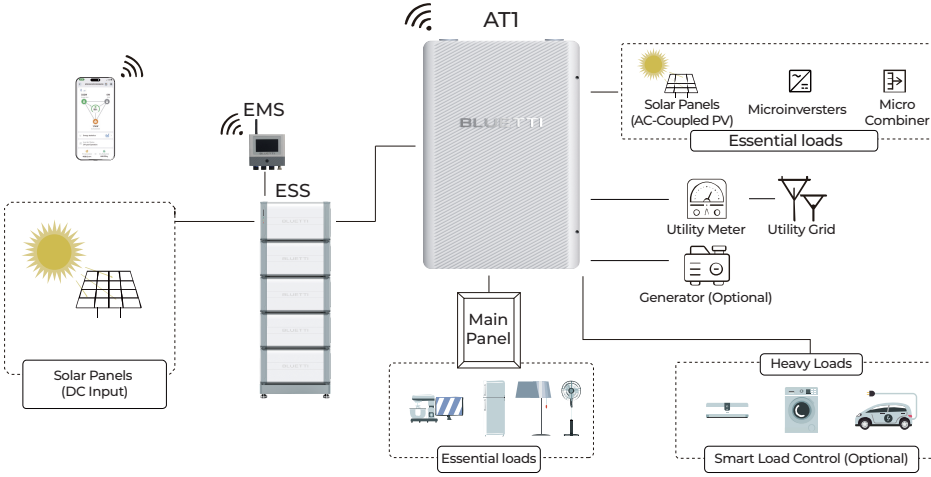

Fig. 7-1 Whole-home backup

• **Partial Backup**

During setup, select the loads you want to keep running during an outage. Connect them to the AT1's Backup port, excluding smart circuit loads. All other loads will be considered as non-essential and should be connected to the grid-side panel. When the grid goes down, the ESS keeps your backup loads powered.

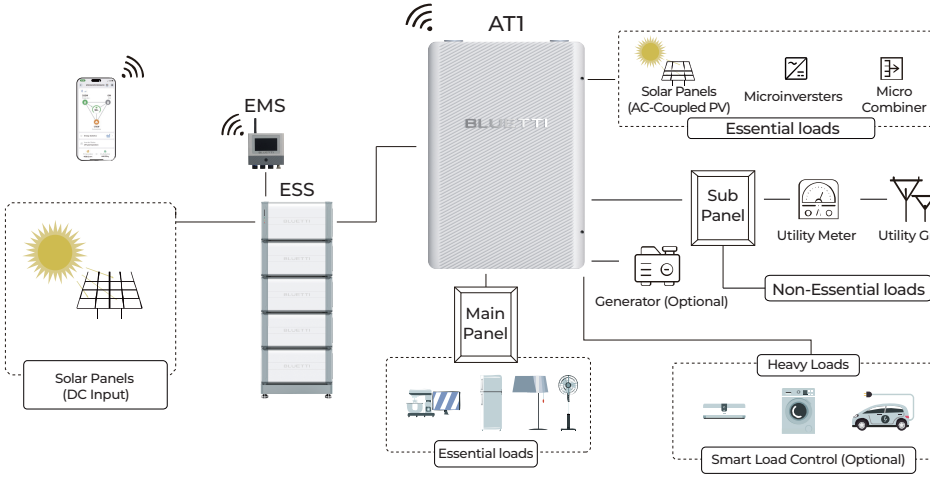

Fig. 7-2 Partial backup

For detailed wiring, please refer to the Chapter 7.7.

7.2 Before You Install

Attention: Installation must comply with all relevant local or regional electrical regulations.

- The AT1 smart distribution panel can be integrated with the grid.
- Follow local requirements like National Electrical Code® (NEC) ANSI/NFPA 70 standards for isolating and interconnecting AC circuits between the AT1 and other devices.
- Ensure your setup complies with all grid connection rules.
- Use copper conductors only. Choose conductor size, insulation rating, and installation method according to local standards for temperature, current, and efficiency.
- AC and DC circuits are isolated from the panel enclosure. If NEC Section 250 applies, grounding must be completed by the installer.
- Make sure the grid voltage stays within the allowed range for the system.

Warning

- Where required, install smoke detectors or fire protection equipment according to local building and fire codes.
- Do not install the AT1 in occupied residential or living spaces.
- Install it in a dry location, away from flood-prone areas.
- If installed near garages or vehicles, mount it off the driving path—ideally above bumper height or on a side wall.
- Keep the unit away from water sources such as downpipes, sprinklers, taps, or any other plumbing fixtures.

Warning

- Ensure snow buildup does not block the panel.
- Always shut off power before installing, removing, or adjusting current transformers (CTs). Never work on live circuits.
- When powered by photovoltaic systems, the AT1 must not be installed within the PV array boundary, as defined by NEC Article 690.

7.3 Prepare the Necessary Tools

Table 7-1

No.	Picture	Description
1	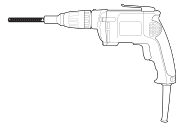	Electric drill
2	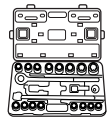	Socket wrench set
3		Allen wrench set
4		Torque wrench
5		Flat screwdriver
6	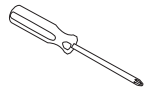	Cross screwdriver
7	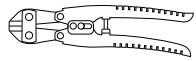	Cable cutter (for power cables)
8	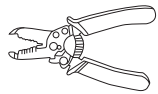	Cable stripper (for signal wires)
9		Cable crimper (for signal wires)

No.	Picture	Description
10	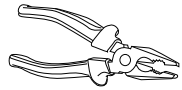	Combination pliers
11	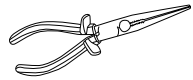	Needle-nose pliers
12	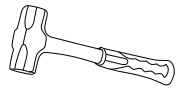	Hammer
13	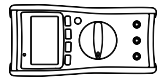	Multimeter
14		Marker
15		Measuring tape
16	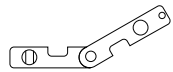	Level
17	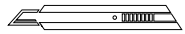	Box cutter
18		Heat shrink tubing
19		Heat gun
20	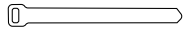	Cable tie
21		Anti-static gloves
22		Safety helmet

No.	Picture	Description
23		Protective goggle
24		Mask
25		Safety-toe shoes
26		Vacuum cleaner

7.4 Mounting the AT1

7.4.1 Environment Requirements

- Choose a dry, clean and stable wall surface for installation. Avoid areas with clay, soft soil, or spots that could sink over time.
- Do not install the system in low-lying areas prone to water and snow accumulation to prevent water ingress and result in system failure.
- Ensure the installation site is elevated above historical high water levels.
- The AT1 can be installed indoors and outdoors. If installed outdoors, use a high-quality shelter or waterproof cover to protect it from direct sunlight and rain for safe and stable operation.
- Keep the equipment away from flammable liquids, gases, or explosive materials.
- Keep away from children and pets.
- Do not install the AT1 in coastal areas where salt accumulation could cause corrosion. This includes areas within 1,642 ft (500 m) from the coast or places exposed to sea breezes. Salt accumulation can be influenced by seawater, humidity, precipitation, air moisture, and local geography.
- Install the AT1 in a well-ventilated and spacious area to ensure good heat dissipation.

7.4.2 Location Requirements

- Install the AT1 on a sturdy, flat, and level surface.
- Do not install the system on flammable materials and keep it away from water pipes and cable conduits.
- Consider the weight and placement and placement of components to ensure adequate structural support.

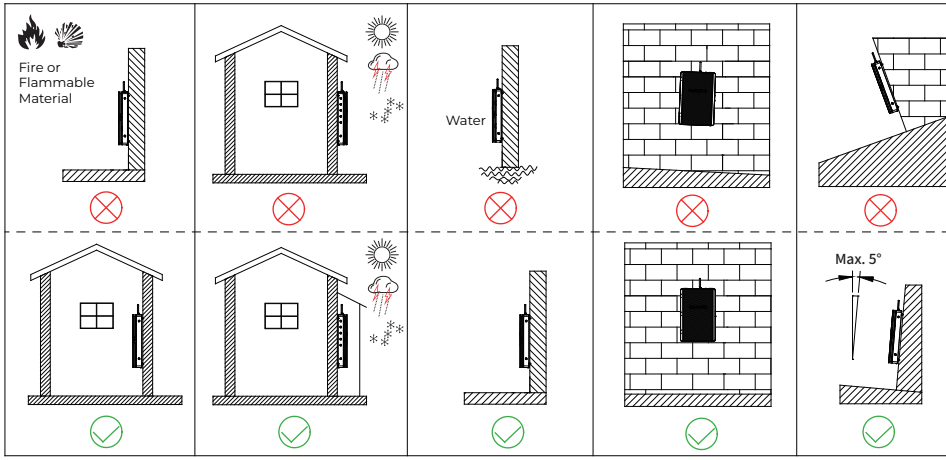

Fig. 7-3

7.4.3 Space Requirements

Leave at least 10 inches (25 cm) above, and position the bottom 41 to 45 inches (1.04 to 1.14 meters) from the floor. Keep at least 36 inches (91 cm) of open space in front for safe and easy operation.

Once you've chosen the location, mark the drilling holes on the wall based on the mounting holes on the back of the unit.

Note: Place a piece of cardboard against the rear of AT1, trace the hole positions, and use it as a guide for drilling.

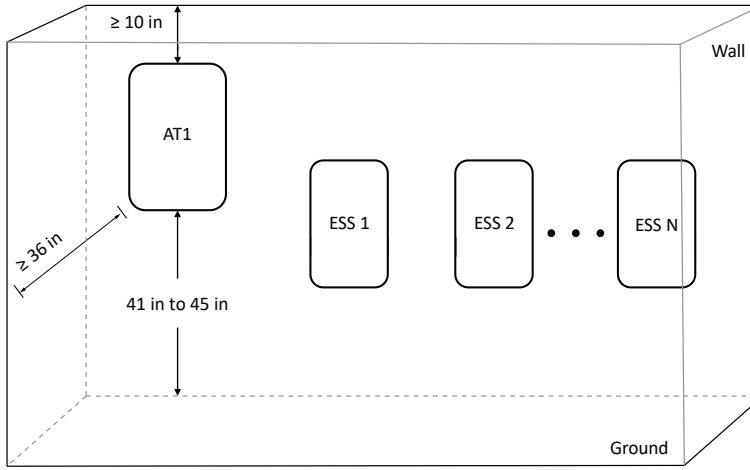

Fig. 7-4

Table 7-2 Maximum Cable Lengths for Data Connections

Connection	Max. Cable Length
AT1 to ESS	32.8 ft (10 m)
AT1 to Generator	98.4 ft (30 m)

Danger

Make sure to check for any cables or pipes before drilling into the wall.

Warning

- Fully cover all internal components before drilling. Remove any debris before wiring or installing devices.
- Cover the top vents during drilling to keep dust and debris out.
- Installation must comply with local codes and standards. Where applicable, the final installation method and spacing must follow the licensed structural engineering design.

7.4.4 Remove the Door and Front Panel

Step 1: Unscrew the six Phillips screws—two each at the top, middle, and bottom—to detach the door.

Attention: Remove the screws on the hinge attached to the unit side. This helps avoid scratches during installation.

Step 2: Remove the five M4 Phillips screws on the front panel, then lift it off.

Note: Do not install breakers or connect any cables before mounting the unit.

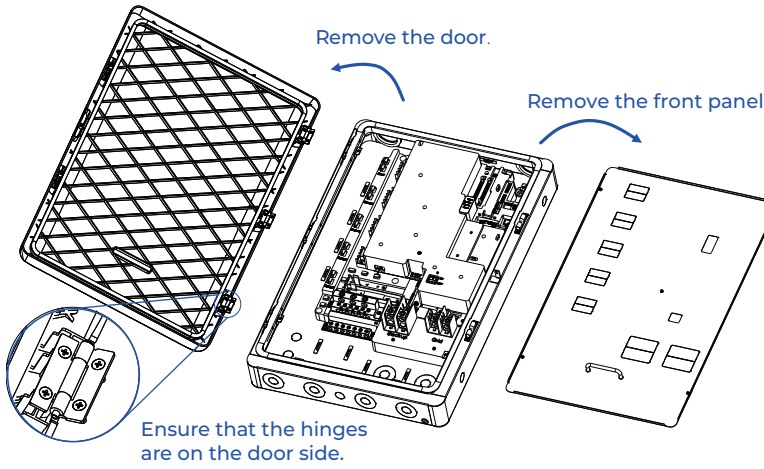

Fig. 7-5

7.4.5 Choose the Cable Entry

Step 1: Decide if the cables will be routed from either side or from the back of the AT1 smart distribution panel.

Step 2: Use the proper conduit fittings or cable seals to fully seal each entry point.

Attention: Once the cable entry is punched open, it cannot be undone. Do not drill into any metal surface other than the designated cable entries.

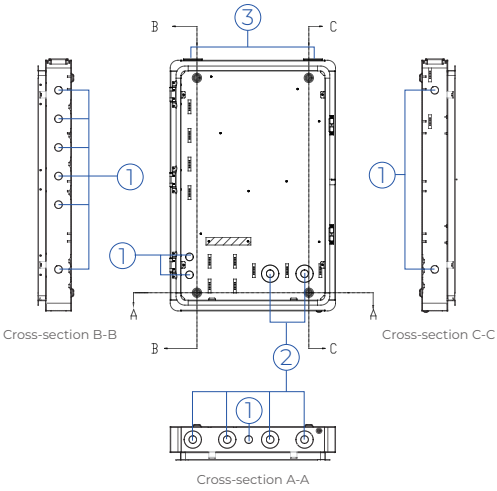

Table 7-3 AT1 conduct dimensions

Knockout	Trade Size (Unit: in)
①	1/2
②	2 or 1/2
③ (with seal plugs)	2

Step 3: To remove a knockout, place a slotted screwdriver on the edge of the knockout (not the center), from the outside of the unit.

Step 4: Give the screwdriver a firm tap with a hammer. One solid hit is usually enough.

Note: Striking the edge makes it easier to remove the knockout and requires less force than hitting the center.

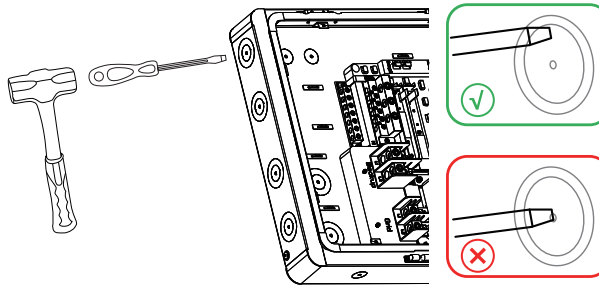

Fig. 7-7

Note: If using rear cable entry, make sure the conduit holes are aligned with the AT1's mounting points—refer to the diagram for guidance. The knockout layout is the same for both rear and side entry.

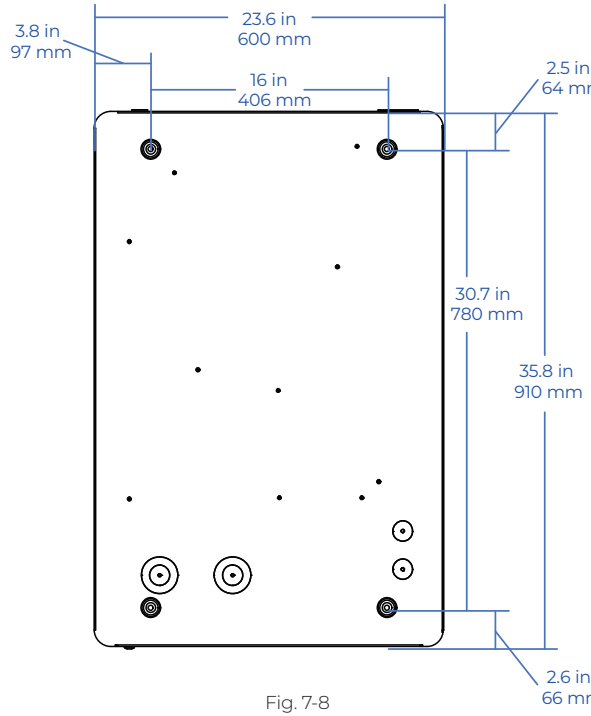

Fig. 7-8

Step 5: Check your local electrical codes and box fill limits to choose the correct size and number of conduits. An adapter may be needed to properly connect the conduit to the AT1 wiring compartment.

7.4.6 Mounting

Have at least two people for safe mounting.

One person should hold the AT1 in place at the desired height.

The other secures it by tightening four self-tapping screws into the corners of the AT1.

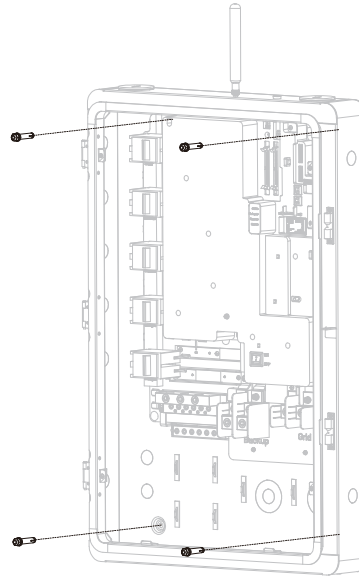

Fig. 7-9

Note: For best results, run cables through the bottom of the unit. If using a top entry, make sure it's fully sealed to prevent water ingress.

7.5 Breaker Installation

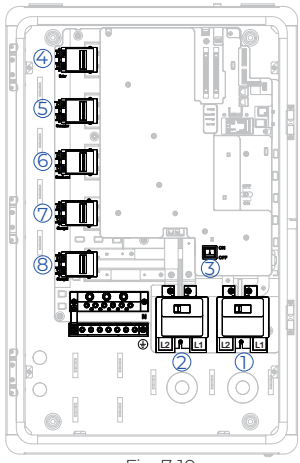

Fig. 7-10

No.	Name
1	Grid Breaker* (Connects to the main panel)
2	Backup Load Breaker*
3	System Switch
4	AC PV Breaker*
5	Generator Breaker*
6	Smart Load Breaker*
7	ESS Breaker 1*
8	ESS Breaker 2*

* Provided and installed by a licensed electrician.

Important Notes

- Install breakers for the AC-coupled solar system (AC PV), generator, smart load, and ESSs based on your setup. DO NOT connect their power cables directly to the busbar without a breaker.
- Use the AC PV breaker to connect microinverters to the AT1. Some microinverters may not be fully compatible with BLUETTI systems, please contact BLUETTI support for details.
- Use the generator breaker to connect a generator. Make sure the peak current doesn't exceed 80 A to avoid overload or tripping.
- Use the smart load breaker for smart loads like EV chargers.
- Use the ESS breakers to connect BLUETTI energy storage equipment (e.g., EnergyPro 13K, EnergyPro 6K, Apex 300). For more details, please contact BLUETTI support.
- Install the grid and backup load breakers according to your needs. If not in use, you can directly connect the power cable to the terminal.

7.5.1 Recommended Breaker and Wire Gauge

Application	Max. OCPD	Recommended Breaker	Specs
AC-Coupled Solar System	20-80 A	Siemens# Q***	2-Pole, 10 kAIC, 240 V
		Siemens# Q***H	2-Pole, 22 kAIC, 240 V
Generator	20-80 A	Siemens# Q***	2-Pole, 10 kAIC, 240 V
		Siemens# Q***H	2-Pole, 22 kAIC, 240 V
Smart Load (ESS 3)	20-80 A	Siemens# Q***	2-Pole, 10 kAIC, 240 V
		Siemens# Q***H	2-Pole, 22 kAIC, 240 V

Application	Max. OCPD	Recommended Breaker	Specs
ESS (ESS 1/ESS 2)	20-100 A	Siemens# Q***	2-Pole, 10 kAIC, 240 V
		Siemens# Q***H	2-Pole, 22 kAIC, 240 V
Backup Load	200 A	Eaton# BW2200	2-Pole, 10 kAIC, 200 A/240 V
		Eaton# BWH2200N	2-Pole, 25 kAIC, 200 A/240 V
Grid	200 A	Eaton# BW2200	2-Pole, 10 kAIC, 200 A/240 V
		Eaton# BWH2200N	2-Pole, 25 kAIC, 200 A/240 V

Max. Continuous Current	Max. OCPD	Breaker	Breaker Specs	Recommended Wire Gauge*
16 A	20 A	Siemens# Q220	2-Pole, 10 kAIC, 20 A/240 V	14 AWG
24 A	30 A	Siemens# Q230	2-Pole, 10 kAIC, 30 A/240 V	10 AWG
32 A	40 A	Siemens# Q240	2-Pole, 10 kAIC, 40 A/240 V	8 AWG
40 A	50 A	Siemens# Q250	2-Pole, 10 kAIC, 50 A/240 V	8 AWG
48 A	60 A	Siemens# Q260	2-Pole, 10 kAIC, 60 A/240 V	6 AWG
56 A	70 A	Siemens# Q270	2-Pole, 10 kAIC, 70 A/240 V	4 AWG
64 A	80 A	Siemens# Q280	2-Pole, 10 kAIC, 80 A/240 V	4 AWG
72 A	90 A	Siemens# Q290	2-Pole, 10 kAIC, 90 A/240 V	3 AWG
80 A	100 A	Siemens# Q2100	2-Pole, 10 kAIC, 100 A/240 V	3 AWG
160 A	200 A	Eaton# BW2200	2-Pole, 10 kAIC, 200 A/240 V	3/0 AWG
16 A	20 A	Siemens# Q220H	2-Pole, 22 kAIC, 20 A/240 V	14 AWG
24 A	30 A	Siemens# Q230H	2-Pole, 22 kAIC, 30 A/240 V	10 AWG
32 A	40 A	Siemens# Q240H	2-Pole, 22 kAIC, 40 A/240 V	8 AWG
40 A	50 A	Siemens# Q250H	2-Pole, 22 kAIC, 50 A/240 V	8 AWG
48 A	60 A	Siemens# Q260H	2-Pole, 22 kAIC, 60 A/240 V	6 AWG
56 A	70 A	Siemens# Q270H	2-Pole, 22 kAIC, 70 A/240 V	4 AWG
64 A	80 A	Siemens# Q280H	2-Pole, 22 kAIC, 80 A/240 V	4 AWG
72 A	90 A	Siemens# Q290H	2-Pole, 22 kAIC, 90 A/240 V	3 AWG
80 A	100 A	Siemens# Q2100H	2-Pole, 22 kAIC, 100 A/240 V	3 AWG
160 A	200 A	Eaton# BWH2200N	2-Pole, 25 kAIC, 200 A/240 V	3/0 AWG

* Copper wire required.

7.5.2 Maximum Current of ESS Configurations

Choose the appropriate breaker and cable based on the maximum continuous current of multiple ESS units connected to the AT1. For details, see Chapter 7.5.1.

ESS Model	Units in Parallel (per branch)	Max. Continuous Current	Max. OCPD
EnergyPro 13K	1	56 A	70 A
EnergyPro 6K	1	24 A	30 A
	2	48 A	60 A
	3	72 A	90 A
Apex 300	1	50 A	62.5 A
	2		
	3		

7.6 Cable Installation

7.6.1 Connecting the AC-Coupled Solar System

Connect the AC-coupled solar system such as solar inverter to the AT1 using the AC PV breaker only.

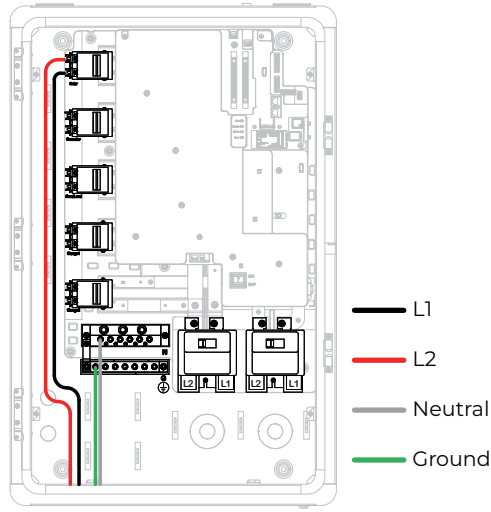

Fig. 7-11

7.6.2 Connecting the Generator

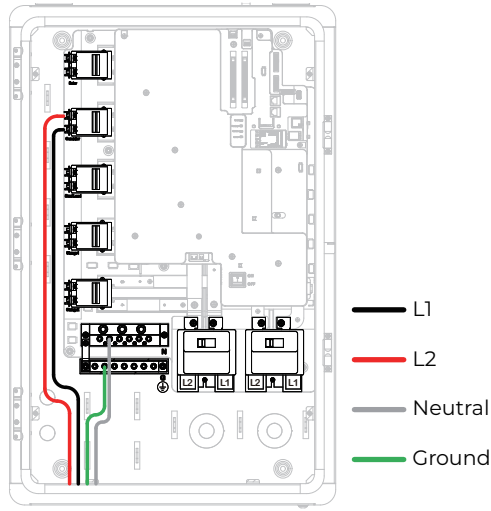

Fig. 7-12

7.6.3 Connecting the Smart Load

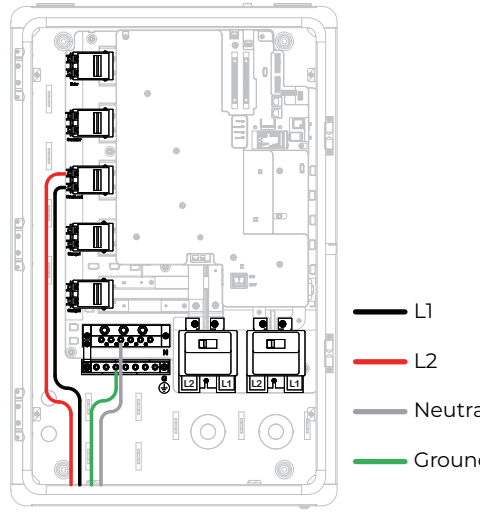

Fig. 7-13

7.6.4 Connecting the Energy Storage System (ESS)

Connect the ESS to the AT1 as shown below.

Attention: Only connect the ESS of the same model to a single AT1. For setup guidance, please contact BLUETTI support.

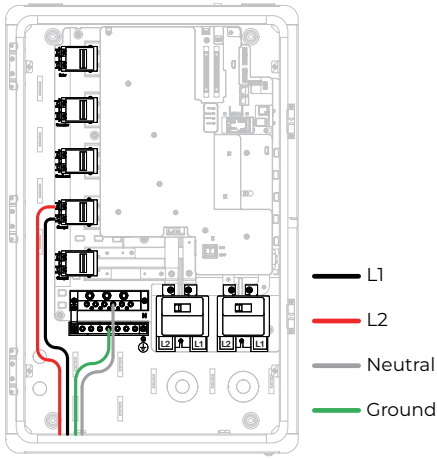

Fig. 7-14 Connecting to ESS1

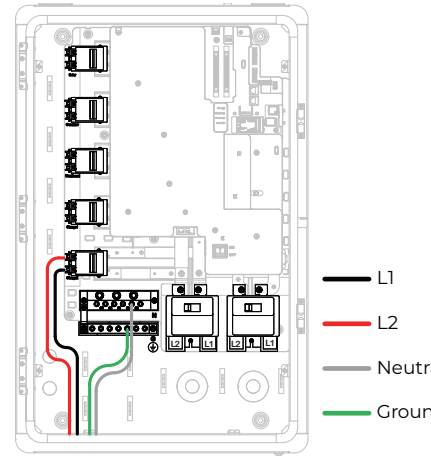

Fig. 7-15 Connecting to ESS2

7.6.5 Connecting the Backup Load

Connect the backup conductors to the AT1 terminals using the recommended cables. Once the essential load breaker is installed, the layout changes—L2 will be on the left, and L1 on the right.

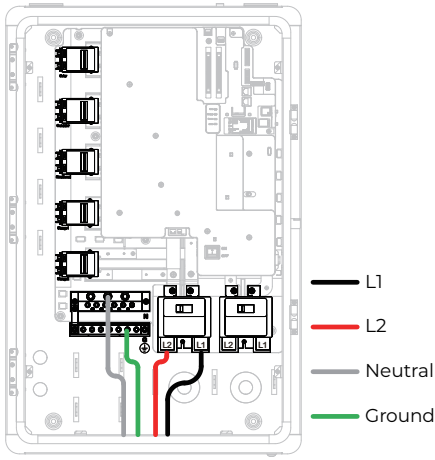

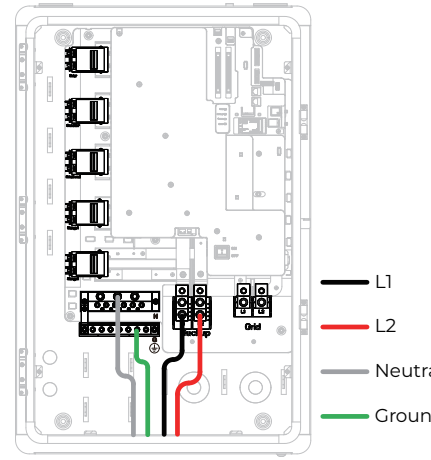

Fig. 7-16

7.6.6 Connecting the Grid Supply

Connect the grid conductors to the AT1 terminals using the recommended cables. Once the grid breaker is installed, the layout changes—L2 will be on the left, and L1 on the right.

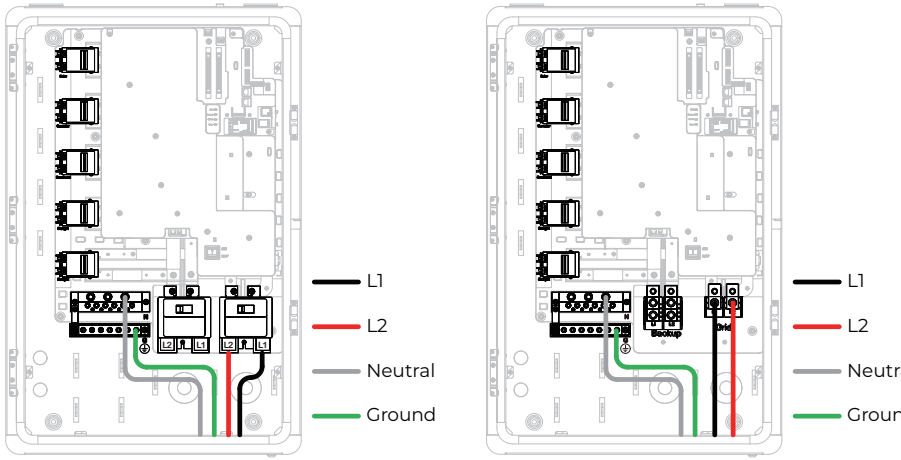

Fig. 7-17

7.6.7 Neutral-Ground Bonding Jumper

- If the AT1 is installed as service equipment, the neutral and ground must be bonded, following NFPA 70 250 Grounding and Bonding (Part V).
- Only remove the Neutral-Ground Bonding Jumper if the unit is not used as service equipment or during testing.

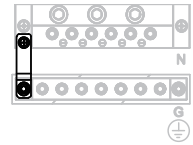

Fig. 7-18

7.7 System Wiring

7.7.1 System with Breaker

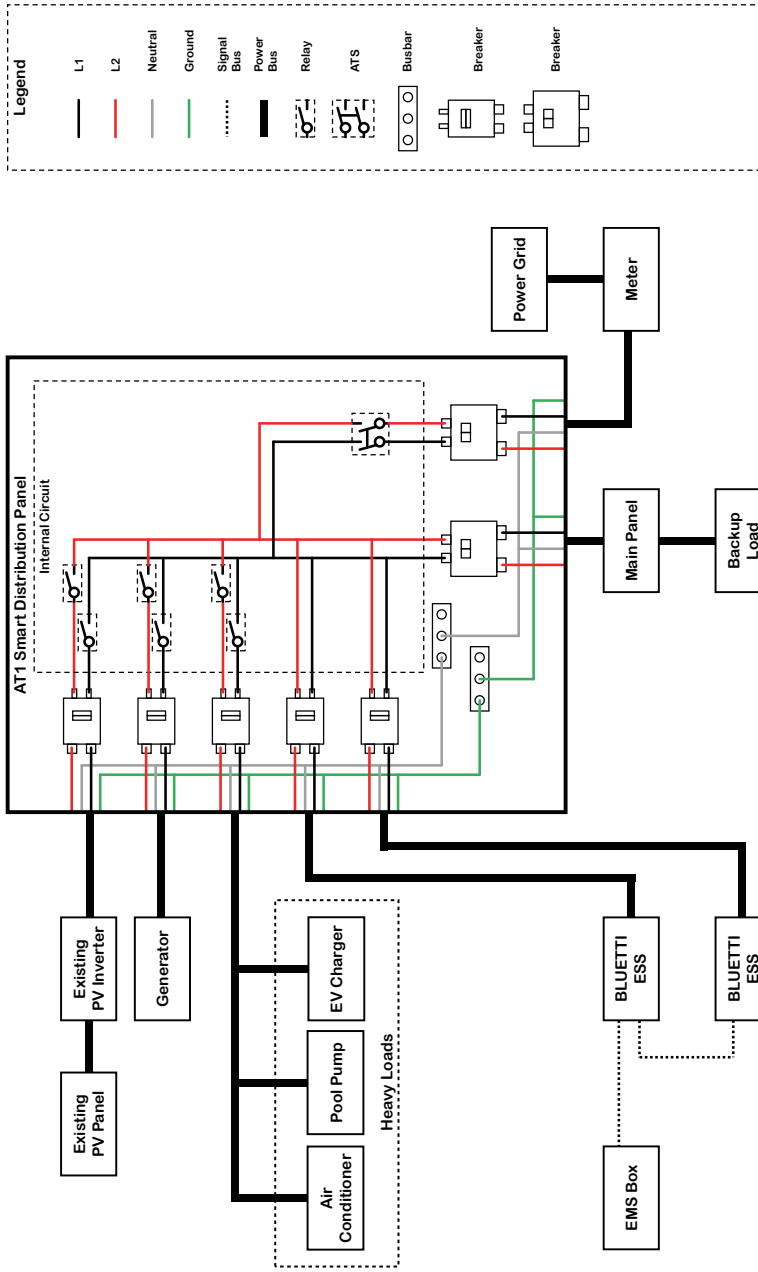

Fig. 7-19 Whole-home backup

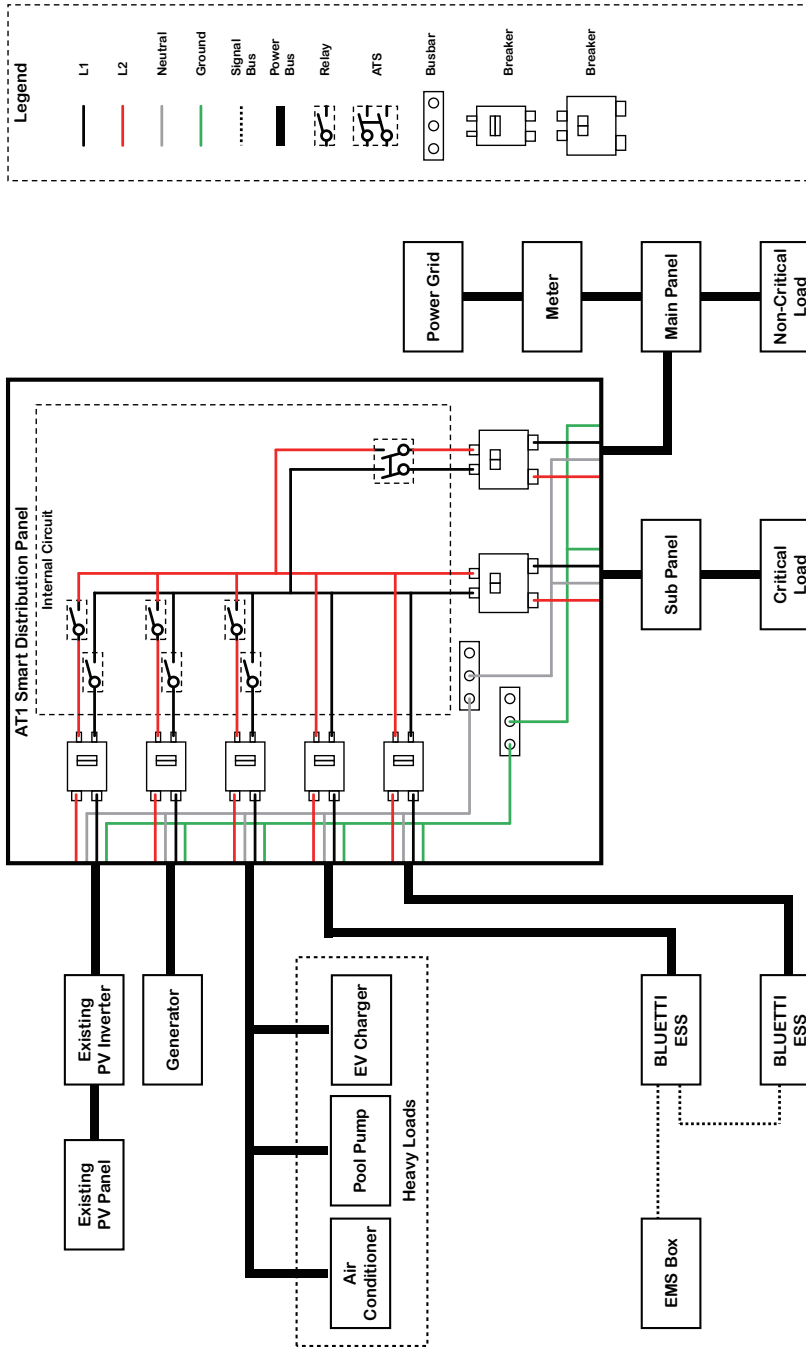

Fig. 7-20 Partial backup

7.7.2 System without Backup Breaker

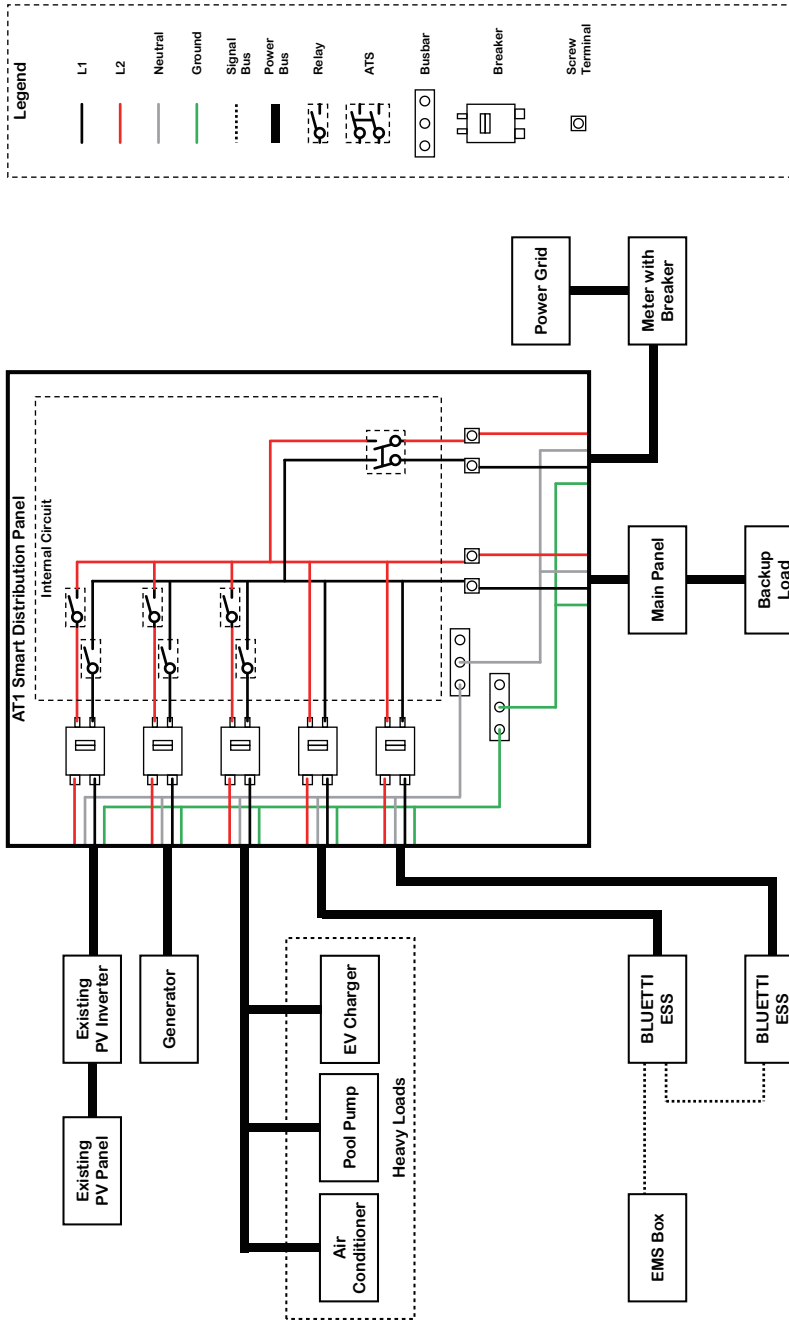

Fig. 7-21 Whole-home backup

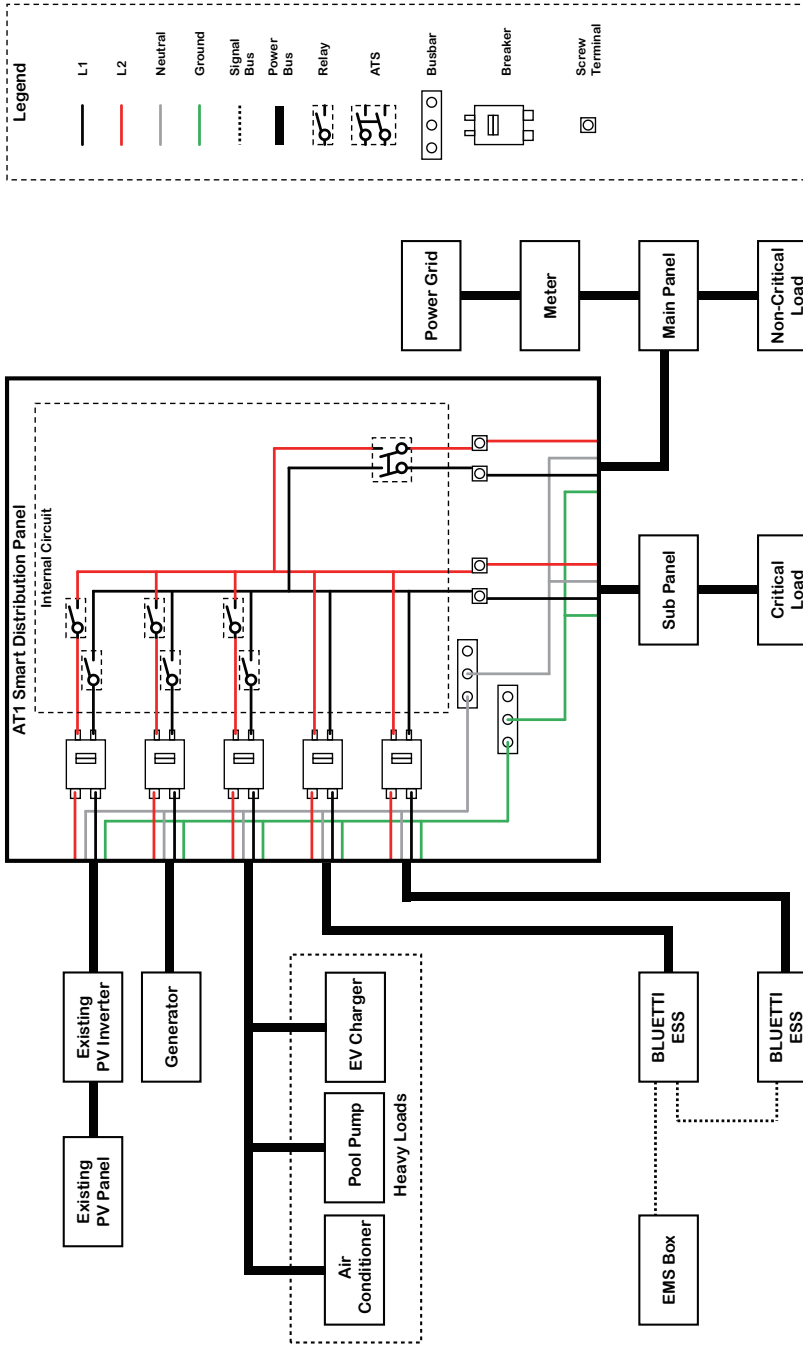

Fig. 7-22 Partial backup

7.7.3 Connecting to Energy Storage System

7.7.3.1 EnergyPro 13K

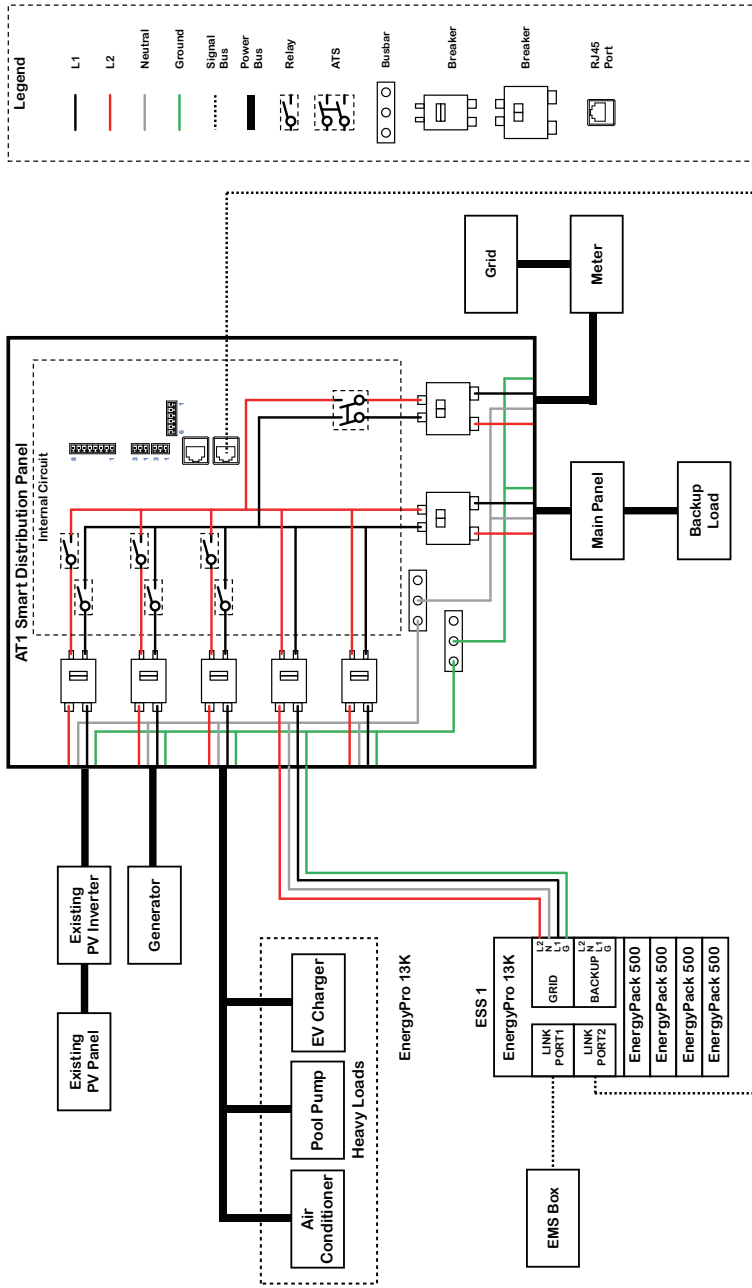

Fig. 7-23 1* EnergyPro 13K

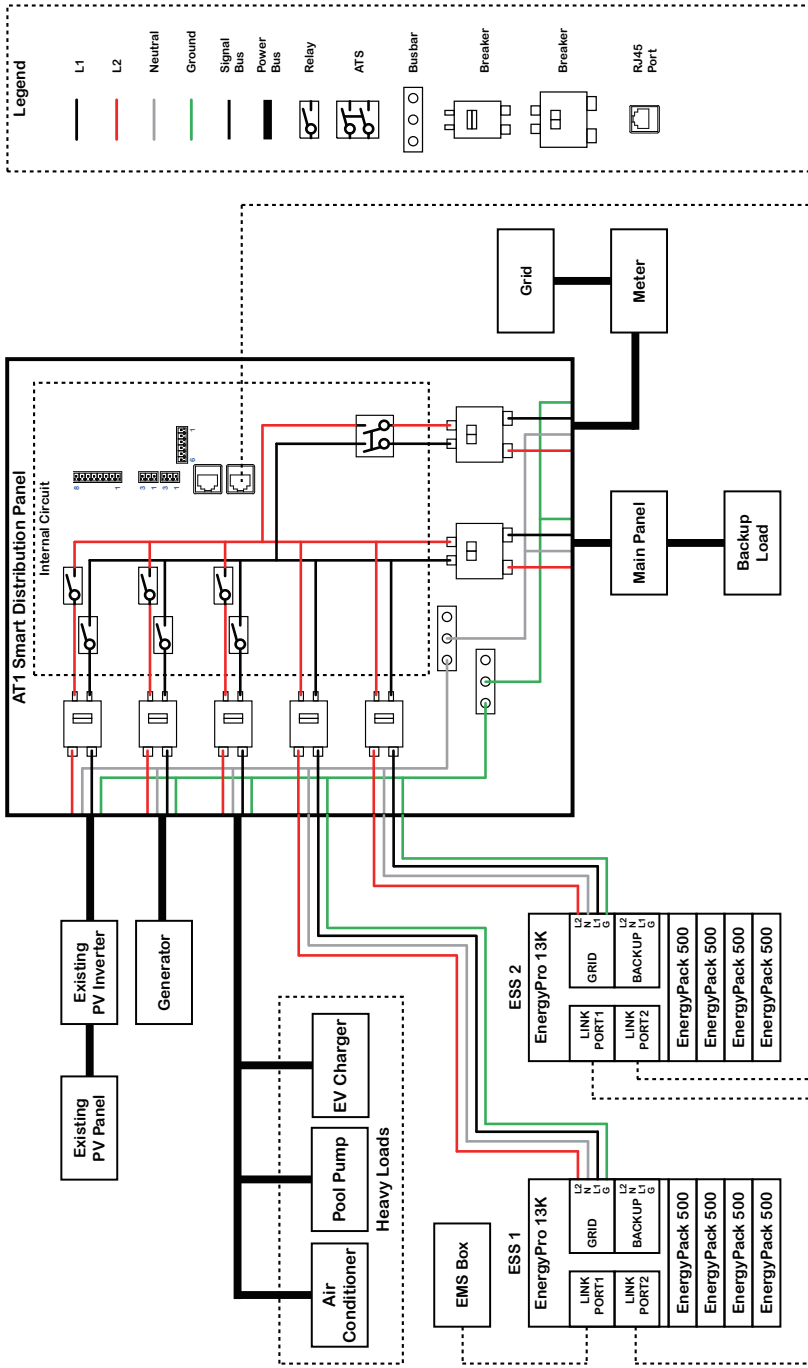

Fig. 7-24 2* EnergyPro 13K

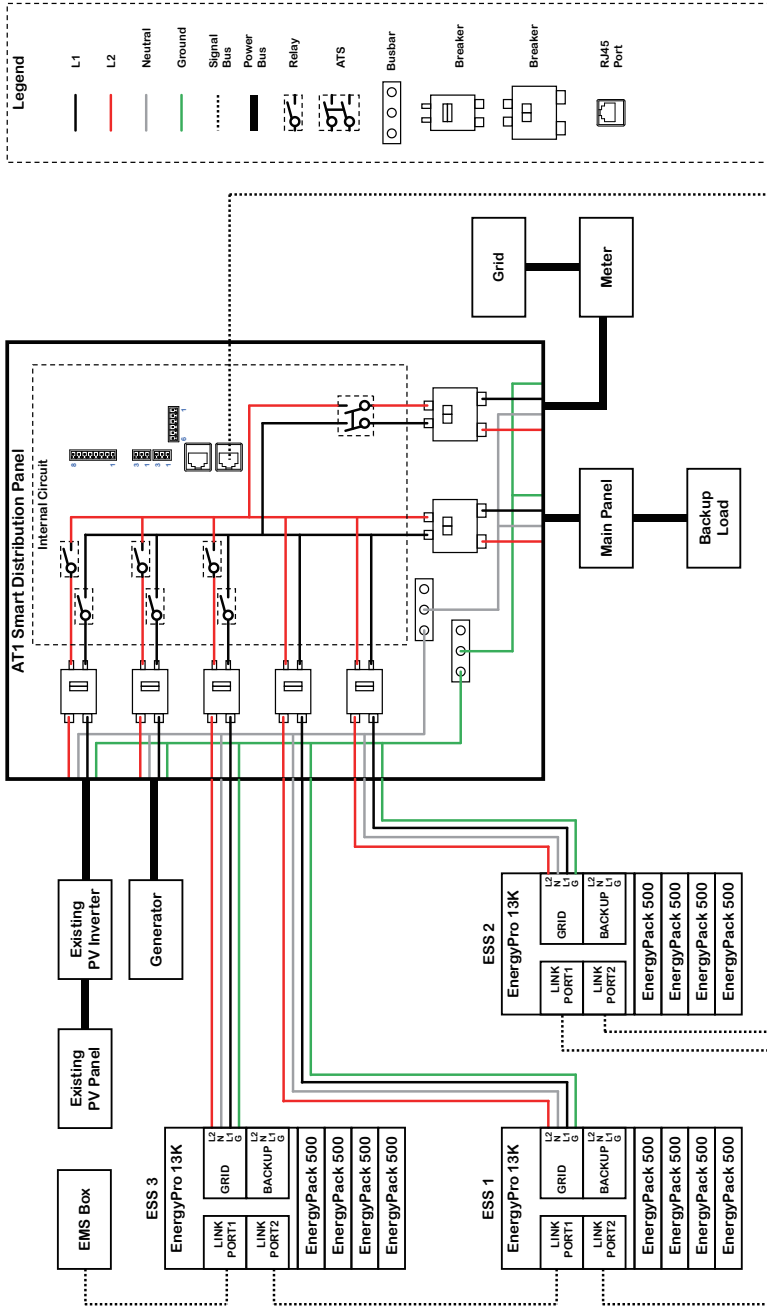

Fig. 7-25 3* EnergyPro 13K

Note: Do not connect loads to the BACKUP block on the EnergyPro 13K.

7.7.3.2 EnergyPro 6K

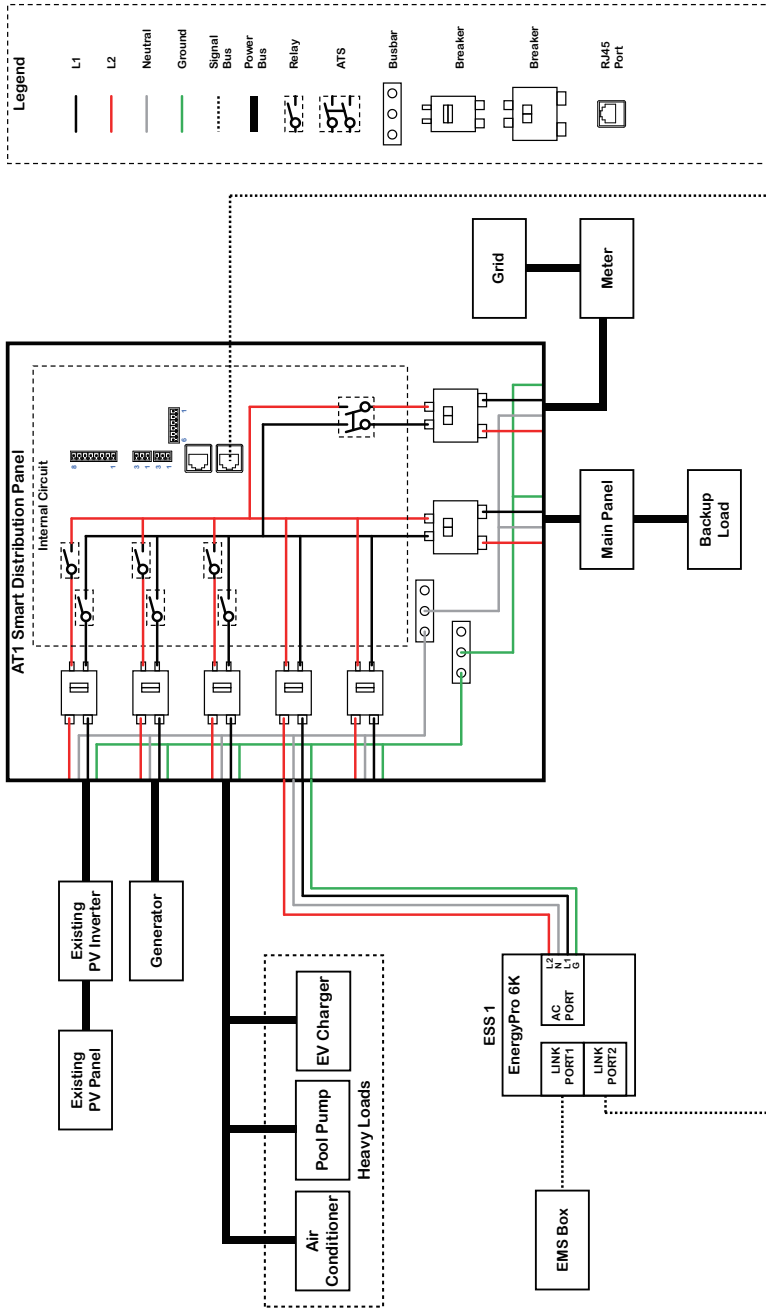

Fig. 7-26 1* EnergyPro 6K

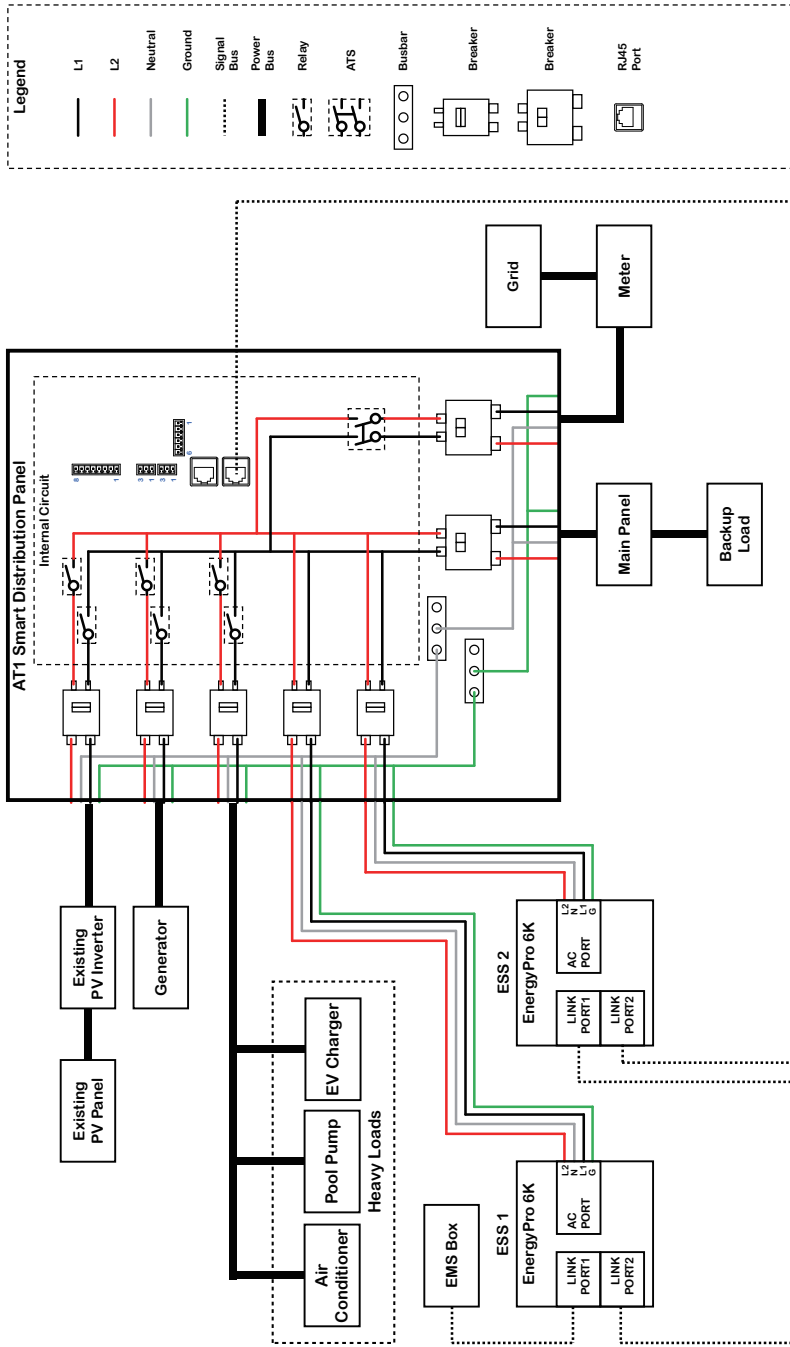

Fig. 7-27 2* EnergyPro 6K

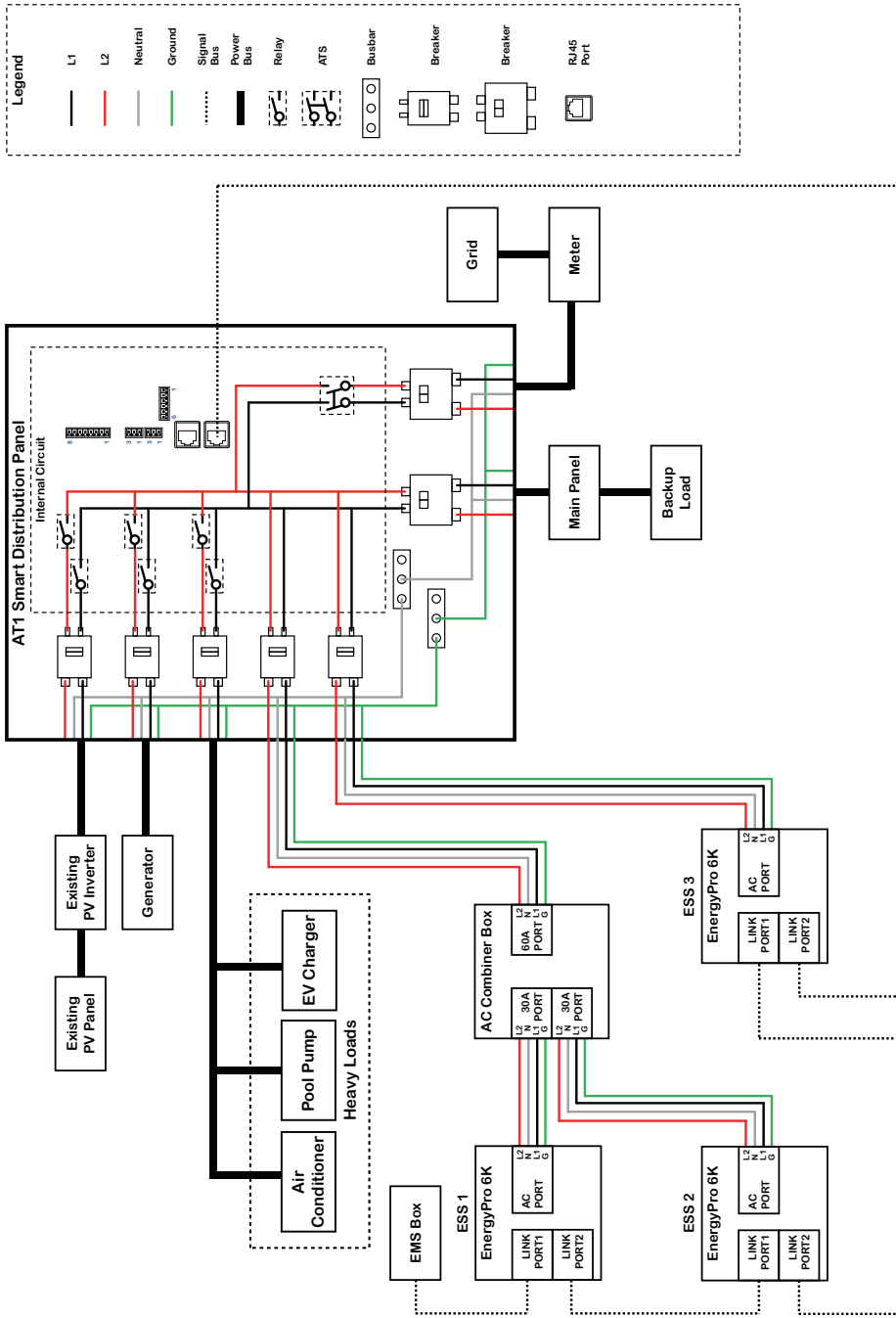

Fig. 7-28 3* EnergyPro 6K

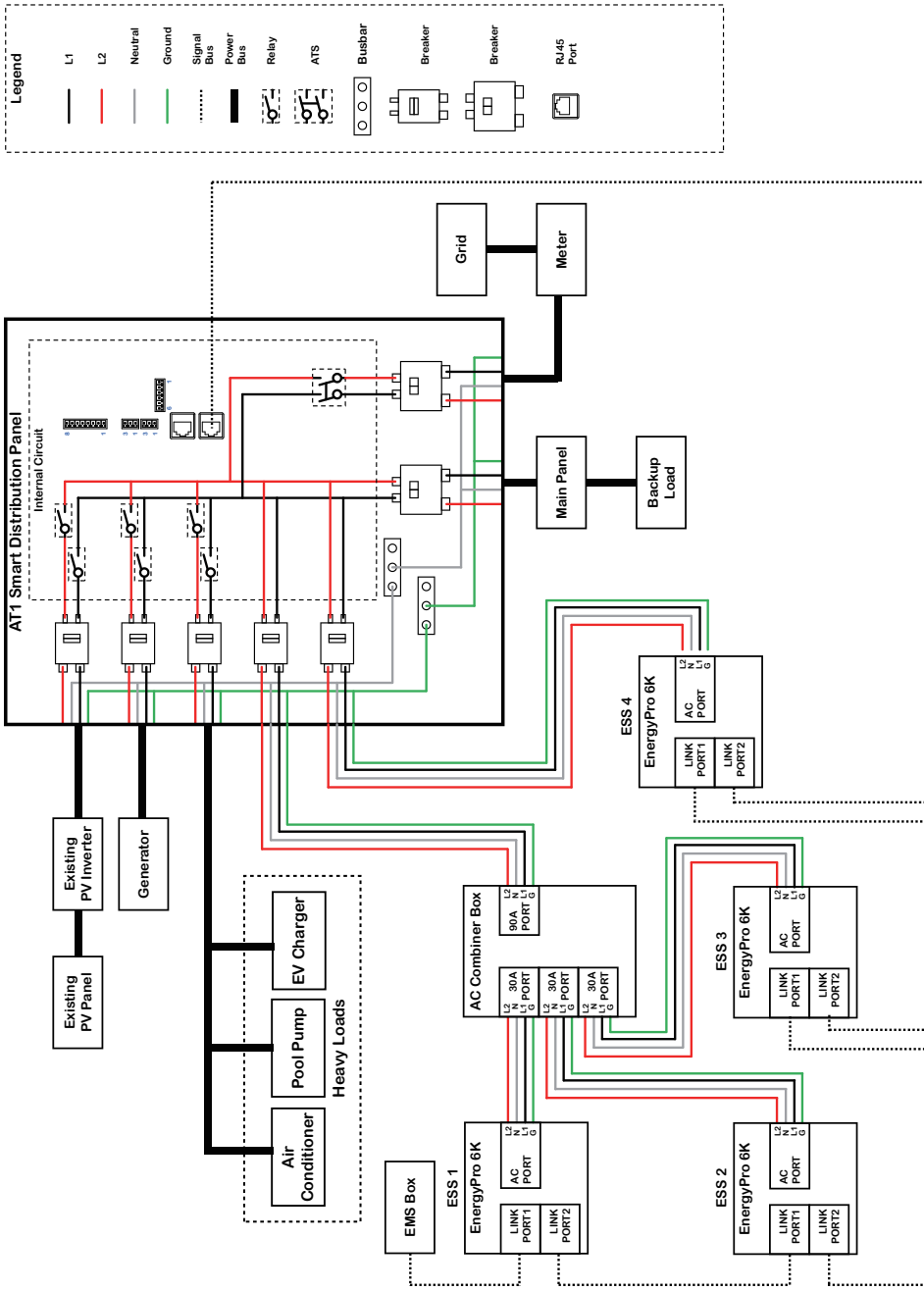

Fig. 7-29 4* EnergyPro 6K

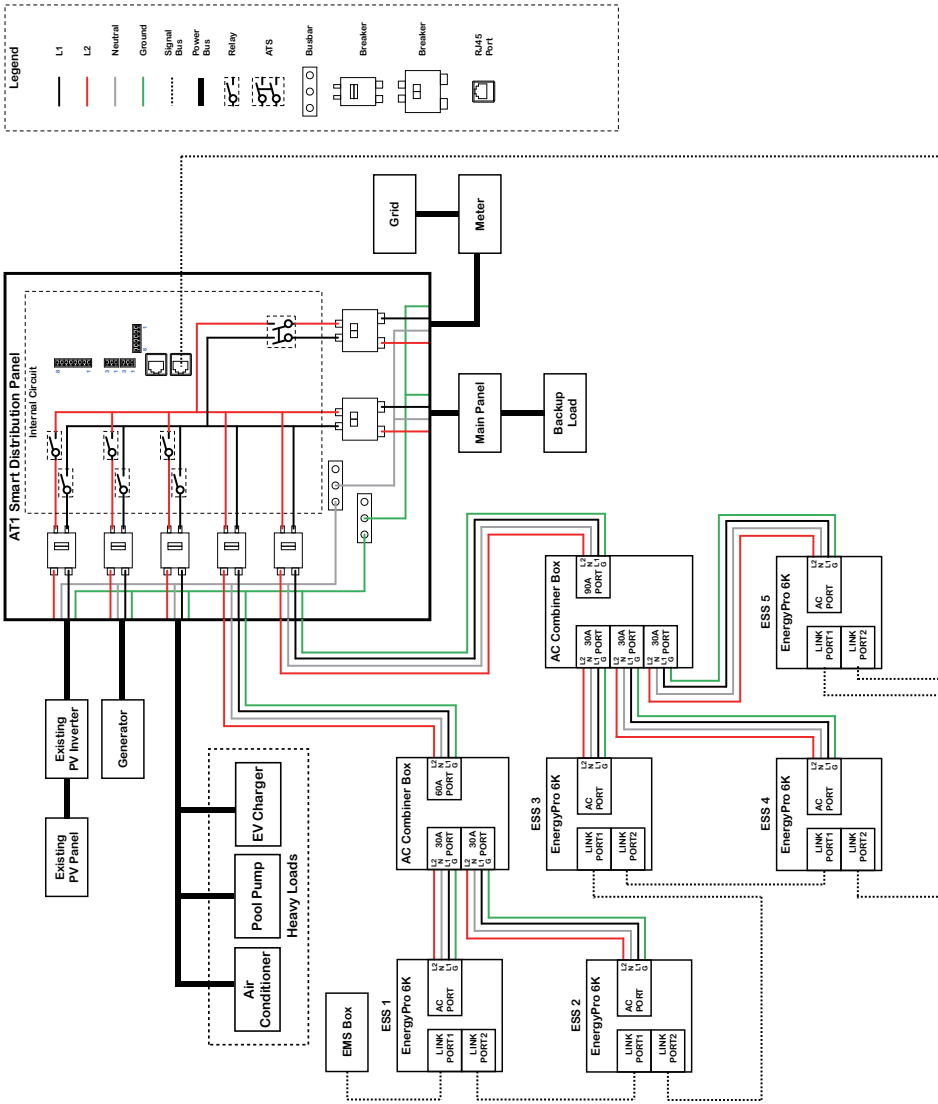

Fig. 7-30 5* EnergyPro 6K

7.7.3.3 Apex 300

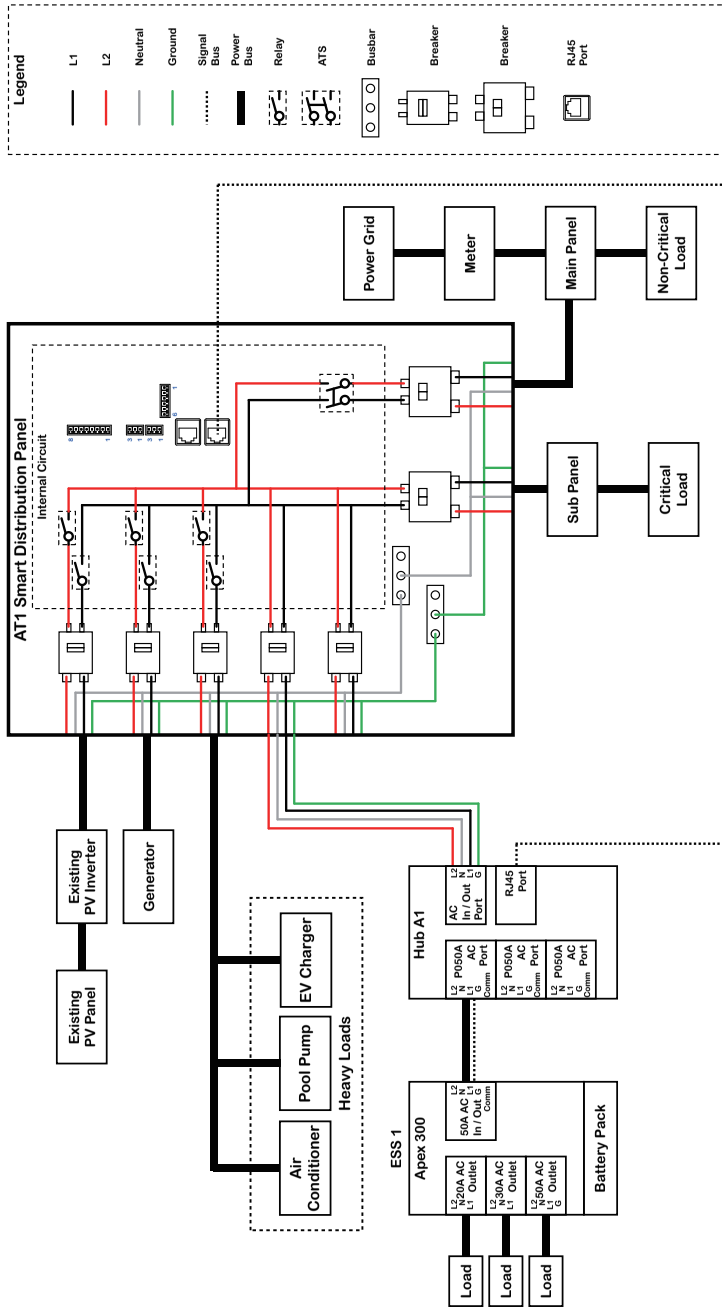

Fig. 7-311* Apex 300

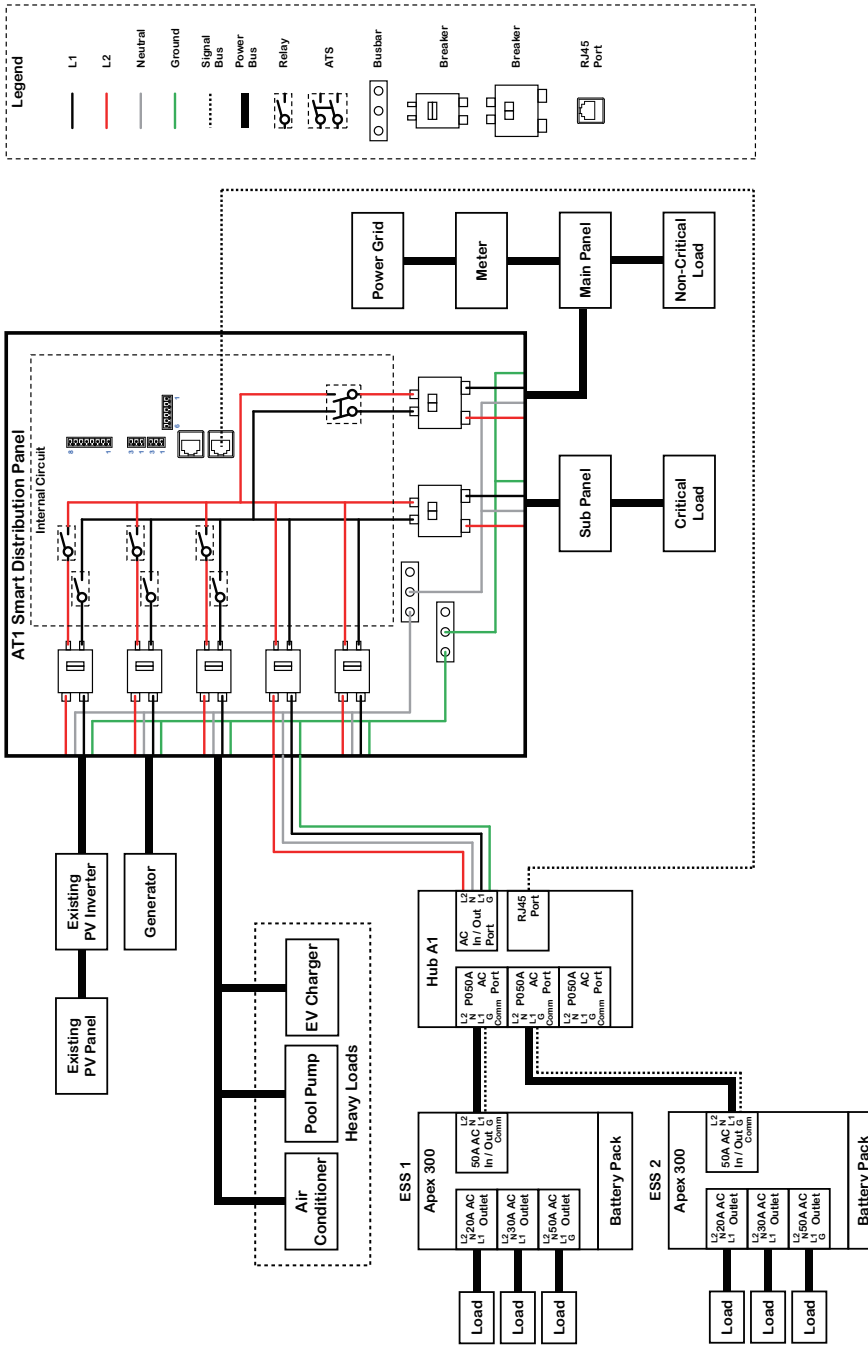

Fig. 7-32 2* Apex 300

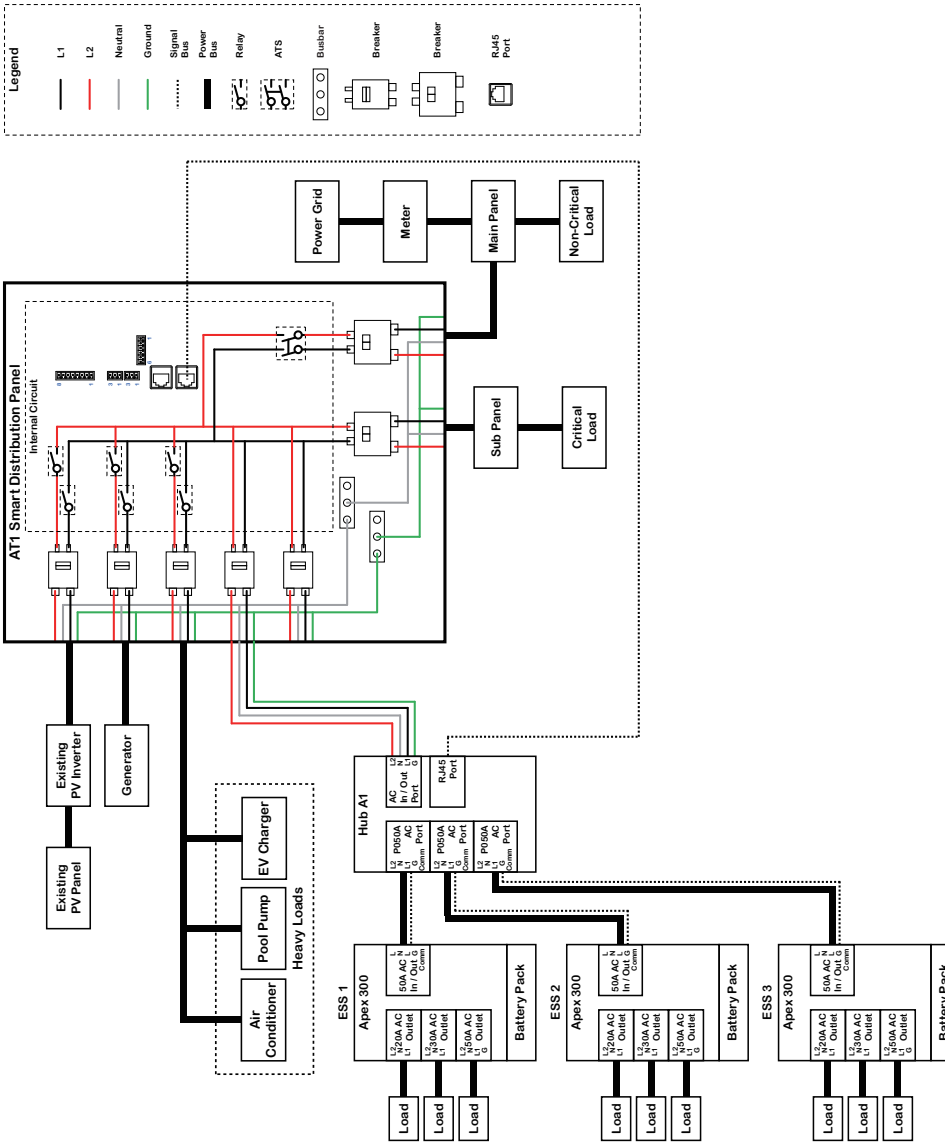

Fig. 7-33 3* Apex 300

Note: Use the dedicated P050A parallel cable to connect Hub A1 and Apex 300.

7.8 Other Components

7.8.1 Rapid Shutdown Switch

The AT1 can connect to a Rapid Shutdown (RSD) switch via the RSD+ / RSD- ports. For details, see Chapter 6.4.3.

- When the RSD switch is OFF, AT1 will automatically shut down all output.
- When switched back to ON, AT1 runs a self-test and then resumes normal operation.

Install the Rapid Shutdown Switch

Step 1: Remove the factory jumper from the RSD+/RSD- ports on the signal panel.

Step 2: Use at least 24 AWG conductors and connect the RSD ports to a compatible RSD switch.

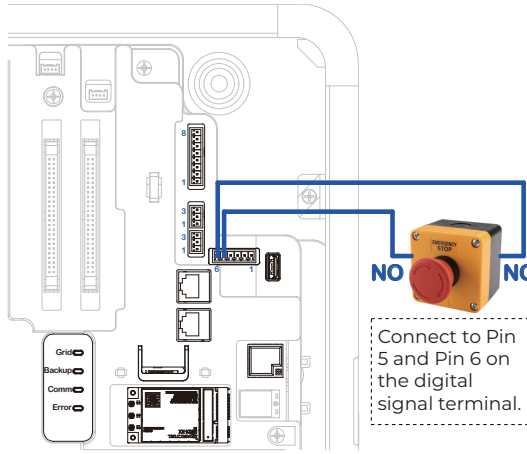

Fig. 7-34

Switch Requirements

- Listed or recognized as an Emergency Stop (button, device, or unit)
- Certified to UL 508 or UL 60947-1 / -5-1 / -5-5
- Rated for 12V or higher
- Outdoor-rated (NEMA 3R or higher)
- Terminals must support 24 AWG wire or larger

Installation Guidelines

- Mount the switch outdoors, in a visible and accessible location—ideally near the grid meter.
- Keep the low-voltage wire run under 150 ft (45 m).
- Install the control circuit using Type TC-ER cable or within an appropriate raceway.

7.8.2 4G Module & External Antenna

Attention: Power off the AT1 following the steps in Chapter 8.4, then remove the front panel.

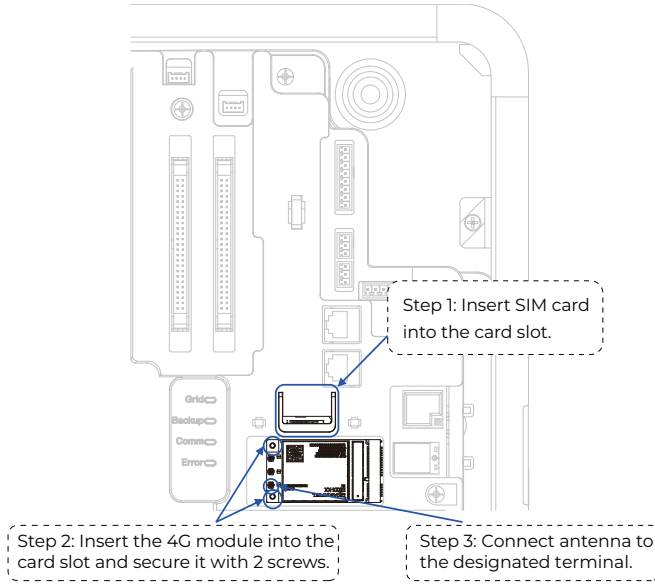

Fig. 7-35

Step 1: Install the SIM card into the SIM slot on the signal panel, as shown in Chapter 6.4.

Step 2: Slide the 4G module into its slot at a slight angle. Once it's in, press it down gently—it should sit flat and line up with the screw holes.

Step 3: Secure the module using the two included screws.

Step 4: Attach the antenna to the green-marked port on the module, as shown below.

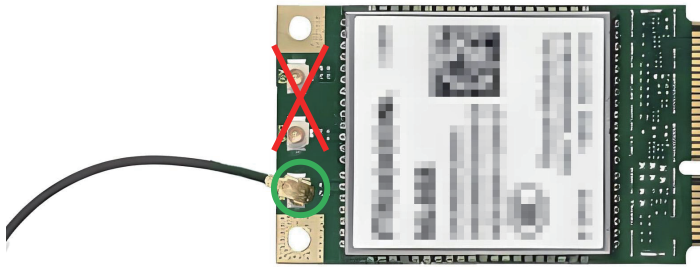

Fig. 7-36

Step 5: Mount the external antenna and tighten it securely to keep out moisture.

Step 6: Connect the external antenna to the other end of the 4G module's antenna cable.

Step 7: Use zip ties to neatly secure the antenna in place.

Step 8: Reinstall the front panel and power on the AT1.

8. System Commissioning

8.1 Preliminary Check

Before powering up the AT1 for the first time, double check:

- All system components are installed properly.
- Verify that the L (live) and N (neutral) wires are securely connected, with correct polarity, and that the voltage is within the acceptable range.
- Make sure the ground wire is properly and securely connected.
- All AC circuit breakers are switched OFF.
- AC circuit breakers used meet manual requirements and local regulations.
- Grid and load cables are securely and correctly wired.
- Safety signs and warning labels are firmly attached and clearly visible.

8.2 Power on

Step 1: For the initial use, ensure the circuit breakers of the grid, backup load, ESS, smart backup load, generator, and AC PV are powered off.

Step 2: Turn the AT1 system switch to ON.

Step 3: Switch the Grid breaker to ON.

Step 4: The “Grid” indicator lights on, indicating the AT1 is powered by the grid.

Step 5: Wait for a while. If the “Error” indicator stays off, the system is ready.

Step 6: Open the app and connect to AT1. If the “Comm” indicator flashes quickly with pauses, the app is connected successfully. If it stays steady, the AT1 is connected to the app cloud.

Step 7: Switch ON all breakers: backup load, ESS, smart backup load, generator, and AC PV.

8.3 Firmware Upgrade

The AT1 can be upgraded via Bluetooth or OTA. For details, please refer to “Firmware Upgrade” in the *BLUETTI App User Manual*.

8.4 Power off

Warning

After powering off the AT1, residual voltage may still be present, which can cause electric shock or burns. Please wait at least 5 minutes and wear protective gloves before handling the panel.

Step 1: If installed, press the Rapid Shutdown Switch.

Step 2: Switch the ESS breaker(s) to OFF.

Step 3: Switch the Grid breaker to OFF.

Step 4: Switch the AC PV (Solar) breaker to OFF.

Step 5: Switch the Generator breaker to OFF.

Step 6: Switch the Smart Load breaker to OFF.

Step 7: Switch the Backup breaker to OFF.

Step 8: Turn off the system switch and wait for all indicators to turn off.

Step 9: Press the ESS power button to shut down the system.

9. Specifications

Item	Rating
AC Output	
Nominal Voltage	120 V/240 V
Grid Frequency	60 Hz
Max. Continuous Current	
AC PV	64 A (80 A Max. OCPD)
Generator	64 A (80 A Max. OCPD)
Smart Load (connected to ESS 3)	64 A (80 A Max. OCPD)
ESS 1	80 A (100 A Max. OCPD)
ESS 2	80 A (100 A Max. OCPD)
Backup Port	160 A (200 A Max. OCPD)
Grid Port	160 A (200 A Max. OCPD)
Busbar	160 A (200 A Max. OCPD)
Max. Input Short-Circuit Current	10 kA
Generator Connection	Normally open dry contact
Generator Startup	Automatic
Smart Load Control	Automatic/Manual
Overvoltage Category	Category III
Communication	Bluetooth/WiFi/Ethernet/RS485/4G (Optional)
Indicators	LED
User Interface	App
Rapid Shutdown Switch	Supported
Warranty	10 years

General	
Dimensions (H × W × D)	35.8 × 23.6 × 6.44 in (910 × 600 × 163.6 mm)
Net Weight	About 56.44 lbs (25.6 kg)
Mounting	Wall-mounted
Protection Rating	NEMA 3R
Operating Temperature	-4°F to 122°F (-20°C to 50°C)
Storage Temperature	-4°F to 158°F (-20°C to 70°C)
Operating Humidity	Up to 95% relative humidity
Operating Altitude	≤ 6,561.68 ft (2,000 m)
Compliance	
Certifications	UL1741, UL67, UL869A, UL916
Emissions	FCC Part 15, ICES-003

10. Troubleshooting

When a fault occurs, the “Error” indicator will flash and details will appear in the app. Please contact BLUETTI support for assistance.

Error Description	Indicator Status
Relay open	Flashes rapidly.
Relay short circuit	
Internal communication error - sampling module	
Input overfrequency/underfrequency protection	
Input overvoltage/undervoltage protection	
Input overcurrent/undercurrent protection	
Internal communication error - IoT module	
Inverter warning/fault	Flashes slowly.

FAQs (Frequently Asked Questions)

Q1: Tips for maintaining the AT1:

A: To keep the AT1 in good condition:

a. Keep it clean and dry.

b. Ensure proper ventilation.

Q2: Does AT1 have safety features?

A: Absolutely. AT1 comes with protections for overcurrent, short circuit, overvoltage, and undervoltage.

Appendix

Update Firmware via BLUETTI App

Keeping firmware updated is IMPORTANT for optimal performance. For detailed instructions, refer to the app user manual in the app. This manual uses the Elite 200 V2 upgrade as an example.

1. Download the BLUETTI app

Scan the QR code or search for “BLUETTI” in the App Store or Google Play to download the app.

2. Log in or sign up

Log in with a BLUETTI account. If there is no account, create one by following the on-screen instructions.

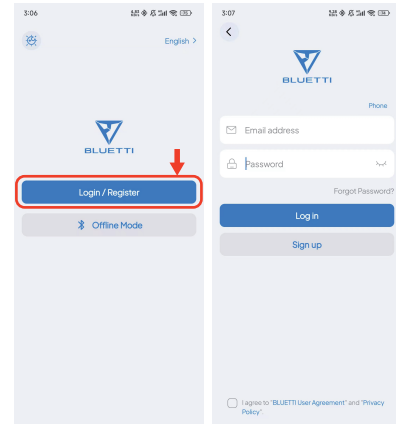

3. Bind the unit

- Tap **Add Device** directly or access **My Devices** > **Add Device** to start the process.
- Select the unit from the available device list, or choose **Add Manually** and enter the unit's serial number (SN).
- Alternatively, tap **Scan** on the **Home** page or in **Add Device** page to bind via QR code.

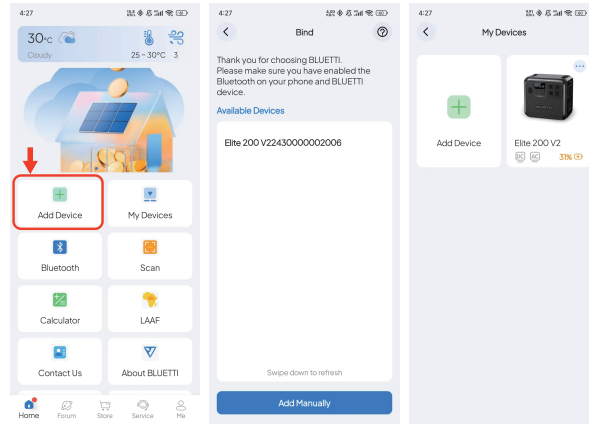

4. Connect via Bluetooth

On the **My Devices** page, tap the unit and select **Bluetooth** as the connection method.

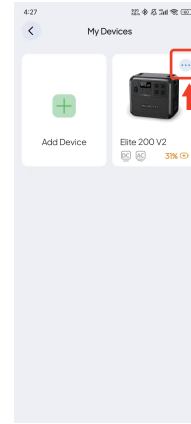

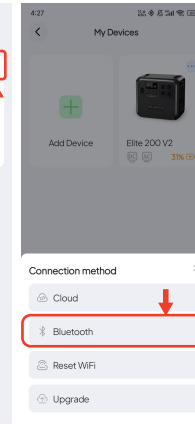

5. Check for Firmware Updates

Tap **Upgrade** to access the **Upgrade** page.
The app will check for the latest firmware version available for the unit.

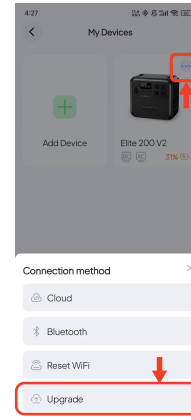

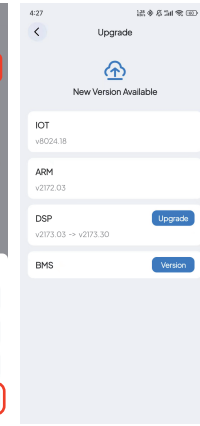

6. Download and Install the Update

If a new firmware update is available, tap **Upgrade** and follow the on-screen instructions.

Notes:

- Ensure the unit remains powered on and connected during the update.
- Keep your phone and the unit close together (recommended range: 16.4ft / 5m).
- Do not exit app until done.

Compliance

• FCC Statement

This device complies with part 15 of the FCC Rules. Operation is subject to the following two conditions:

(1) This device may not cause harmful interference.

(2) This device must accept any interference received, including interference that may cause undesired operation.

This equipment has been tested and found to comply with the limits for a Class B digital device, pursuant to part 15 of the FCC Rules. These limits are designed to provide reasonable protection against harmful interference in a residential installation. This equipment generates, uses and can radiate radio frequency energy and, if not installed and used in accordance with the instructions, may cause harmful interference to radio communications. However, there is no guarantee that interference will not occur in a particular installation. If this equipment does cause harmful interference to radio or television reception, which can be determined by turning the equipment off and on, the user is encouraged to try to correct the interference by one or more of the following measures:

- Reorient or relocate the receiving antenna.
- Increase the separation between the equipment and receiver.
- Connect the equipment into an outlet on a circuit different from that to which the receiver is connected.
- Consult the dealer or an experienced radio / TV technician for help.

FCC Caution: Any changes or modifications not expressly approved by the party responsible for compliance could void the user's authority to operate this equipment.

IMPORTANT NOTE: FCC Radiation Exposure Statement

This equipment complies with FCC radiation exposure limits set forth for an uncontrolled environment. This equipment should be installed and operated with a minimum distance of 20cm between the radiator and your body.

• IC Caution

This device contains licence-exempt transmitter(s) / receiver(s) that comply with Innovation, Science and Economic Development Canada's licence-exempt RSS(s). Operation is subject to the following two conditions:

(1) This device may not cause interference.

(2) This device must accept any interference, including interference that may cause undesired operation of the device.

RF exposure statement: The equipment complies with ISED Radiation exposure limits set forth for uncontrolled environments. This equipment should be installed and operated with a minimum distance of 20cm between the radiator and your body.

L'émetteur/récepteur exempt de licence contenu dans le présent appareil est conforme aux CNR d'Innovation, Sciences et Développement économique Canada applicables aux appareils radio exempts de licence. L'exploitation est autorisée aux deux conditions suivantes:
(1) L' appareil ne doit pas produire de brouillage;
(2) L' appareil doit accepter tout brouillage radioélectrique subi, même si le brouillage est susceptible d' en compromettre le fonctionnement.

Déclaration d'exposition aux RF : L'équipement est conforme aux limites d'exposition aux rayonnements ISED définies pour les environnements non contrôlés. Cet équipement doit être installé et utilisé avec une distance minimale de 20 cm entre le radiateur et votre corps.

CAN ICES (B) / NMB (B)

• Informations sur la sécurité

Avant d'utiliser ce produit, veuillez lire attentivement le manuel et suivre toutes les consignes de sécurité. Prêtez attention aux dangers, avertissements, attentions, remarques et autres étiquettes de sécurité figurant dans le manuel et sur le produit lui-même. Si vous avez des questions ou si vous rencontrez une situation qui n'est pas abordée dans ce manuel, veuillez nous contacter. Une utilisation incorrecte ou non autorisée peut entra?ner des dommages ou des blessures qui ne sont pas couverts par la garantie.

Lignes directrices importantes

Pour une performance et une sécurité optimales, veuillez suivre les lignes directrices suivantes :

- Utilisez et stockez toujours le produit dans les conditions spécifiées dans ce manuel.
- Veiller à ce que le produit soit utilisé conformément à toutes les normes et réglementations pertinentes.
- éviter les modifications non autorisées, le désassemblage ou les changements de logiciel.

Lisez toutes les instructions et tous les avertissements relatifs à ce produit.

BLUETTI n'est pas responsable des situations suivantes ni des conséquences qui en découlent :

- Les dommages causés par des catastrophes naturelles, y compris les tremblements de terre, les incendies, les inondations, les tempêtes ou les coulées de boue.

- Les dommages survenus au cours d'un transport effectué par le client.
- Problèmes causés par un stockage ou une utilisation inappropriés en dehors des conditions spécifiées dans le présent manuel.
- Les dommages causés par la négligence du client, une mauvaise utilisation ou un préjudice intentionnel.
- Les dommages causés par des actions de tiers, y compris une manipulation, une utilisation ou une installation non conforme à ce manuel.
- Dommages ou problèmes causés par des réparations ou des ajustements non autorisés, ou par le retrait des étiquettes du produit.
- Dommages ou risques de sécurité causés par l'utilisation d'appareils non approuvés par BLUETTI pour alimenter ce produit.
- Accidents ou problèmes de sécurité résultant de l'utilisation du produit dans des applications critiques, telles que le nucléaire, l'aviation ou les domaines médicaux, où une grande fiabilité est essentielle pour la sécurité des personnes ou le fonctionnement.

Instructions relatives aux risques d'incendie, d'électrocution ou de blessure des personnes



Danger

Pour assurer un fonctionnement sûr, veuillez suivre les instructions ci-dessous.

- Ne pas nettoyer le produit avec de l'eau.
- Tenir le produit à l'écart des sources de chaleur ou des environnements à haute température.
- N'utilisez jamais le produit à proximité de flammes nues, de gaz explosifs ou dans des environnements contenant de la fumée, des vapeurs ou d'autres conditions dangereuses.
- Ne pas utiliser le produit lorsqu'il est humide. S'assurer que le produit est complètement sec avant de l'utiliser.
- N'ouvrez pas ou ne modifiez pas le produit vous-même. Seul un personnel qualifié doit effectuer des réparations ou remplacer des pièces en utilisant des composants et des cables approuvés par BLUETTI afin d'éviter tout risque d'incendie, d'électrocution ou d'autres blessures.

Directives d'utilisation

- Veillez à faire correspondre les bornes positives et négatives.
- Assurez-vous que toutes les vis sont bien serrées.
- Assurez-vous que le produit est bien installé avant de l'utiliser.

CONSERVER CES INSTRUCTIONS

Need Help? We're here for you!

+1 909-570-0909
Mon–Sat, 06:00–17:00 (PDT)
service@bluettipower.com



@ BLUETTI Official



@ bluetti_inc



@bluetti.inc



@bluetti.inc

Visit Us

BLUETTI Power Inc.
6185 S Valley View Blvd, Ste D, Las Vegas, NV 89118, US

BLUETTI

Certificate

Inspector: _____

QC: _____

Always Share Excellence

P/N: 17.0303.0944-01A1