RECICLA
Al Azul

PAP 22
Raccolta Carta

FR

Cet appareil, ses accessoires et cordons se recyclent

À DÉPOSER EN MAGASIN

OU

À DÉPOSER EN DÉCHÈTERIE

Points de collecte sur www.quefairedemesdechets.fr
Privilégiez la réparation ou le don de votre appareil !

58.03.009.0279

Reolink

Reolink Doorbell Wired

Operational Instructions

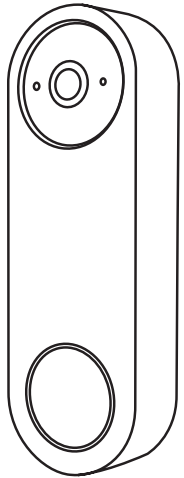

@ReolinkTech https://reolink.com

EN

Contents

01 What's in the Box 2
02 Device Overview 3
03 Setting Up the Device 5
04 Setting Up the Chime 9
05 Installation Tips 13
06 Installation Steps 14
07 Detaching the Doorbell 24
08 Specifications 25
09 Troubleshooting 25
10 Safety Instructions 27
11 Legal Disclaimer 28
12 Compliance 29

01 What's in the Box

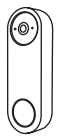
Doorbell

Chime

Mounting Plate

Horizontal Wedge

Mounting Template

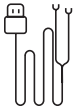
USB-A Y-split Power Cable

Wire Extensions

Jumper Cables

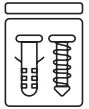
Screw Pack

Operational Instructions

What You Also Need

(Not Included)

#2 Phillips Screwdriver

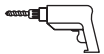

Power Drill

02 Device Overview

❶ Camera Lens
❷ Microphone
❸ IR LED
❹ Button Ring Light
❺ Doorbell Button
❻ LAN/PoE Port
❼ microSD Card Slot
❽ Reset Button
** Press and hold the Reset Button for 5 seconds to restore the device to its factory default settings.*
❾ Screw Terminals
❿ Speaker

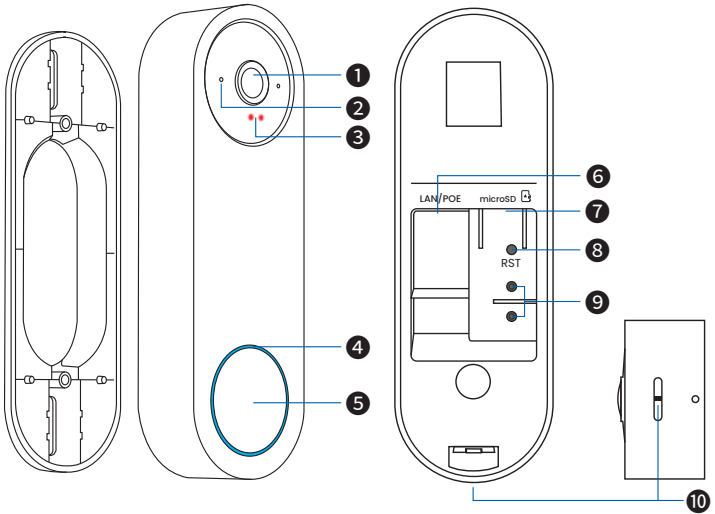

03 Setting Up the Device

Step 1. Download the Reolink App or Client

· On Smartphone

Scan the QR code below to download the Reolink App.

Download on the App Store

GET IT ON Google Play

· On PC

Download the Reolink Client at reolink.com > Support > App & Client.

Step 2. Insert the microSD Card (Optional)

Insert a microSD card into the designated slot on the side of the device.

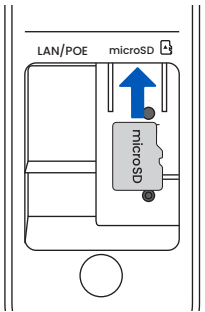

NOTE:
Supports microSD cards up to 512GB (Class 10 or higher speed ratings recommended). Card is sold separately.

Step 3. Power On the Doorbell

For initial setup, connect the included USB-A Y-split power cable to a 5V/2A USB power adapter (not included).

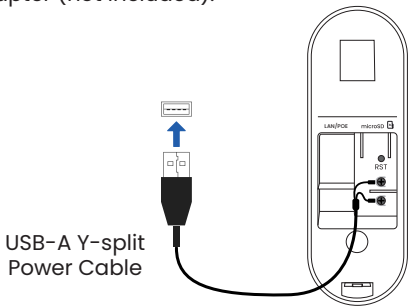

NOTE: Alternative Power Options
You can alternatively power the device using a standalone power adapter (24V/0.5A) or a PoE source (both sold separately).

Step 4. Scan QR Code to Set Up

Tap the ⊕ button in the top corner, scan the doorbell's QR code and follow the on-screen instructions to finish the initial setup.

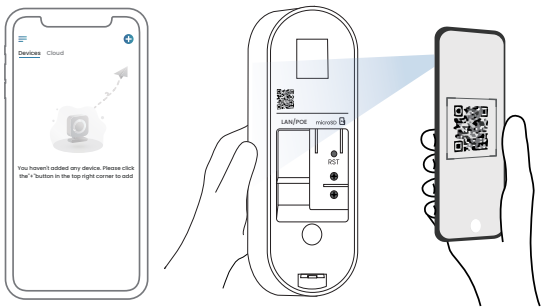

NOTE:
This doorbell uses Bluetooth for the initial network setup. Ensure your phone's Bluetooth is turned on before proceeding.

04 Setting Up the Chime

NOTE:
The included chime is pre-paired with your doorbell out of the box. Manual pairing is required if you are adding multiple chimes to a single doorbell.

Step 1. Plug It In
Plug the Reolink Chime into a standard wall outlet.

Step 2. Test the Connection
Press the doorbell button. The chime should ring immediately.

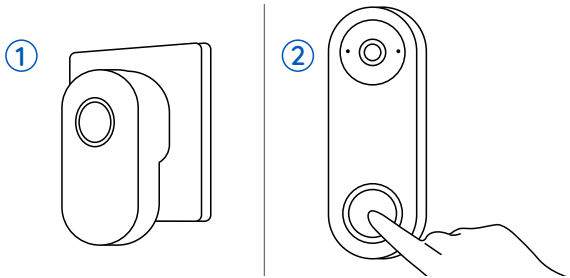

NOTE:
If it doesn't, go to Doorbell Settings to pair it manually, or contact Reolink Support.

Step 3. Customize Your Chime

1. Change Ringtone: Press the Ringtone button on the side to cycle through tones, or select one via the app.

2. Adjust Volume: Press the Volume button to cycle through volume levels (Mute, Low, Moderate, Loud, Very Loud). Or adjust it in the app.

TIPS:
1. The chime will beep twice to signal it has reached the minimum (Low) or maximum (Very Loud) volume.
2. When muted, the status light will flash instead of ringing.

How to Reset the Chime:
Press and hold the Volume Button while plugging the chime into the outlet. Keep holding until you hear 10 slow beeps followed by 4 rapid beeps.

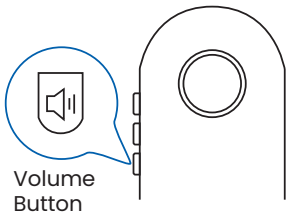

05 Installation Tips

1. Install the doorbell on a flat, stable surface.

2. For optimal viewing, mount it, approximately 48 inches (1.2 m) above the ground.

3. For optimal motion detection, angle the doorbell so visitors move across the field of view rather than directly toward it. Use the included horizontal wedge if needed.

4. If mounting near a side wall, ensure the wall is outside the camera's field of view to avoid night vision glare.

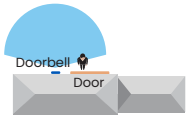

Without a 15° Horizontal Wedge

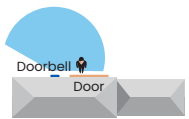

With a 15° Horizontal Wedge

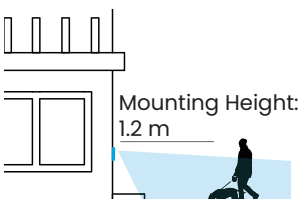

06 Installation Steps

Step 1. Install the Mounting Plate

Option A

Flat Mount (Standard)
Secure the Mounting Plate to the wall with the included long screws.

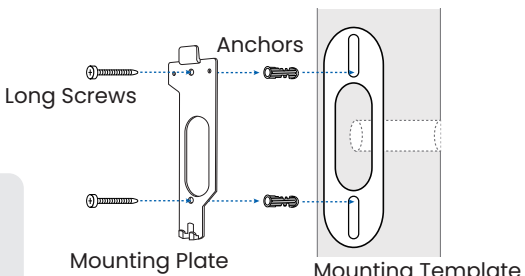

NOTE:
Anchors required for drywall/brick; not required for wood.

Option B

Mount With Horizontal Wedge (Optional)
If you need to adjust the doorbell angle, use the included Horizontal Wedge with the Mounting Plate.

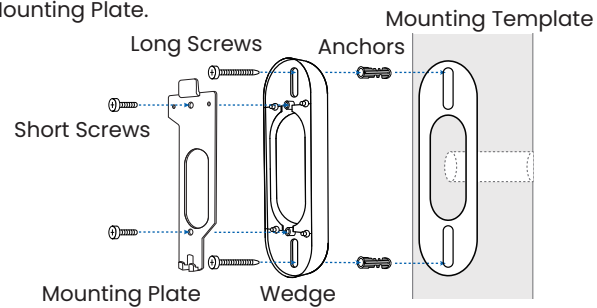

NOTE:
1. Hole positions differ depending on whether the wedge is used.
2. Anchors required for drywall/brick; not required for wood.

Step 2. Power the Doorbell

Option A
Powered by Existing Mechanical Chime System

1. Locate Your Existing Chime
Press your existing doorbell and locate your indoor chime box by sound.

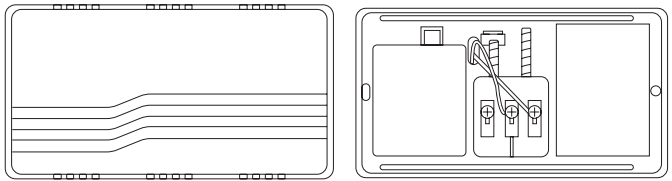

Mechanical Chime

NOTE: Voltage Requirement: 12–24V AC
If the voltage does not meet this requirement, replace or upgrade your transformer.

2. Turn Off the Power
Turn off power at the circuit breaker. Handle wires with care. If unsure, consult a licensed electrician.
Press the old doorbell button to verify that the power is completely off (the chime should not sound).

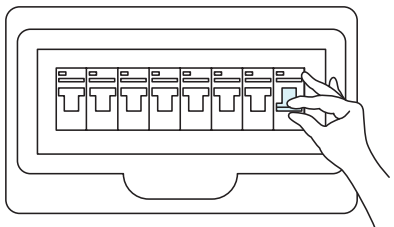

WARNING:
To avoid the risk of electric shock, do not touch any wires until the power is turned off.

3. Remove the Existing Doorbell
Disconnect the wires, remove the old doorbell and all related accessories.

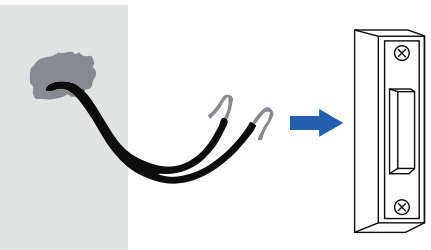

Slightly bend the bare wires so they don't accidentally slip back inside the wall cavity.

4. Connect Doorbell Wires
Connect as shown in the diagram below. Use the jumper cable to bypass your mechanical chime; this ensures sufficient power and prevents humming.

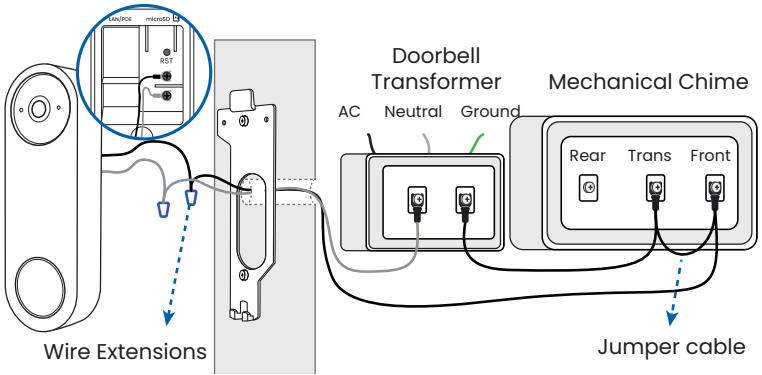

Option B
Powered by PoE Source (Sold Separately)

1. Connect the Ethernet Cable
Run the Ethernet cable through the hole in the wall and the mounting plate, then plug it into the doorbell.

NOTE:
CAT5 or above standard Ethernet cable recommended.

2. Connect to PoE Source
Plug the other end into your PoE Injector, Switch, or Reolink PoE NVR for power and data.

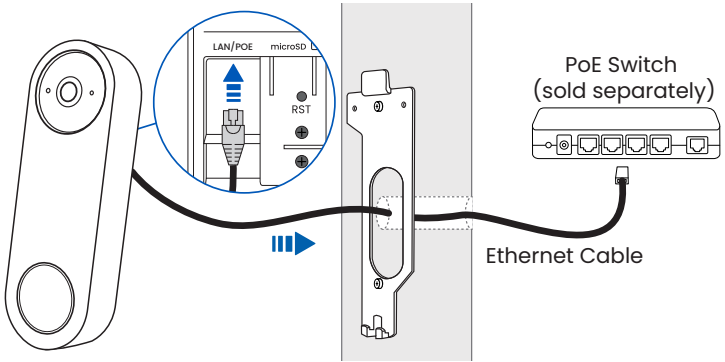

NOTE:
Ensure your powering device is IEEE 802.3af compliant.

Option C
Powered by Power Adapter (Sold Separately)

Securely fasten the wire leads to the terminals on the back of the doorbell, then power it on using the adapter (24V/0.5A).

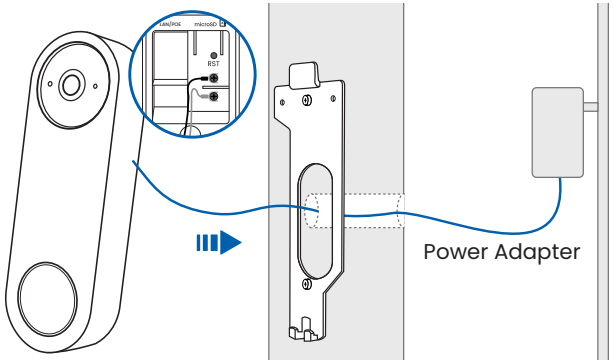

Step 3. Secure the Doorbell

Hook the top of the doorbell onto the mounting plate, then press the bottom until it clicks into place.
Once installed, turn the power back on and verify operation via the app.

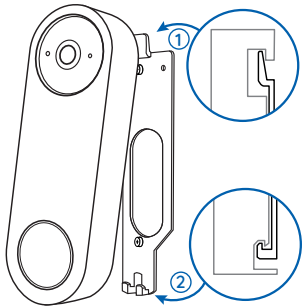

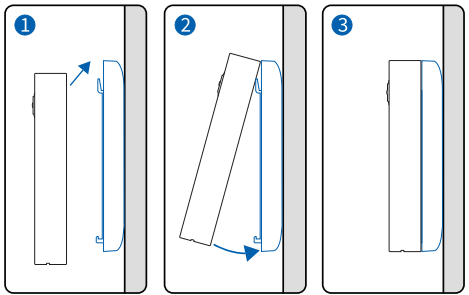

07 Detaching the Doorbell

• Shut off the power for safety.
• Insert the included release pin into the slot at the bottom to release the doorbell from the mounting plate.

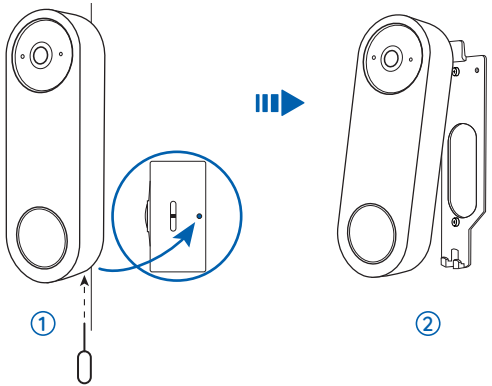

08 Specifications

Field of View: 130° Horizontal, 95° Vertical, 180° Diagonal
Dimensions: 138.4 × 46.0 × 24.9 mm
Weight: 101g
Operating Temperature: -10°C – 50°C (14°F – 122°F)

09 Troubleshooting

Failed to Connect to Wi-Fi During Initial Setup Process

If the camera fails to connect to Wi-Fi, please try the following solutions:

- Ensure that you have entered the correct Wi-Fi password.
- Put the camera closer to your router to ensure a strong Wi-Fi signal.
- Change the encryption method of the Wi-Fi network to WPA2-PSK/WPA-PSK (safer encryption) on your router interface.
- Change your Wi-Fi SSID or password and make sure that SSID is within 31 characters and password is within 64 characters.
- Set your password using only the characters available on the keyboard.

If the problem is not solved, please contact Reolink Support.

Camera Doesn't Work Properly When Added to the Reolink NVR or Home Hub

If your Reolink camera isn't working properly after being added to an NVR or Home Hub, please make sure the firmware on your camera, NVR, and Hub is updated to the latest version. If the issue continues after updating, contact Reolink Support at https://support.reolink.com/.

10 Safety Instructions

Please read the instructions carefully before using the device.

1. Replace only with the same or equivalent type of accessories recommended by Reolink.
2. Do not use the device in an environment that exceeds the recommended temperature range.
3. Do not use the device in an environment that exceeds the recommended humidity range.
4. Do not attempt to disassemble, repair, or alter the device by yourself.
5. Always follow the local safety laws and regulations when using the device.
6. The device contains (or comes with) small components, small plastic elements, and other small parts that may cause choking hazards. Keep the device and its accessories out of reach of children. Consult a physician immediately if small parts are swallowed.
7. The device contains (or comes with) cables or cords that may cause strangulation hazards. Keep the device and its accessories out of reach of children.
8. The product doesn't include assistive features. Customers with disabilities can use devices with assistive features, like computers or smartphones with text-to-speech tools, for accessibility. For individuals with visual or physical impairments, professional help may be needed for installation. Once installed, the product can be controlled entirely via the app.

11 Legal Disclaimer

To the maximum extent permitted by applicable law, this document and the product described, with its hardware, software, firmware, and services, are delivered on an "as-is" and "as-available" basis, with all faults and without warranty of any kind. Reolink disclaims all warranties, express or implied, including but not limited to, warranties of merchantability, satisfactory quality, fitness for a particular purpose, accuracy, and non-infringement of third-party rights. In no event will Reolink, its directors, officers, employees, or agents be liable to you for any special, consequential, incidental or indirect damages, including but not limited to damages for loss of business profits, business interruption, or loss of data or documentation, in connection with the use of this product, even if Reolink has been advised of the possibility of such damages.

To the extent permitted by applicable law, your use of the Reolink products and services is at your sole risk and you assume all risks associated with internet access. Reolink does not take any responsibilities for abnormal operation, privacy leakage or other damages resulting from cyber attacks, hacker attacks, virus inspections, or other internet security risks. However, Reolink will provide timely technical support if required.

The laws and regulations related to this product vary by jurisdiction. Please check all relevant laws and regulations in your jurisdiction before using this product to ensure that your use conforms to the applicable law and regulation. During the use of the product, you must comply with relevant local laws and regulations. Reolink is not responsible for any illegal or improper use and its consequences. Reolink is not liable in the event that this product is used with illegitimate purposes, such as third-party rights infringement, medical treatment, safety equipment, or other situations where the product failure could lead to death or personal injury, or for weapons of mass destruction, chemical and biological weapons, nuclear explosion, and any unsafe nuclear energy uses or anti-humanity purposes. In the event of any conflicts between this manual and the applicable law, the latter prevails.

12 Compliance

SIMPLIFIED EU AND UK DECLARATION OF CONFORMITY

Hereby, REOLINK TECHNOLOGY PTE.LTD. declares that the radio equipment type [refer to the cover of the Operational Instructions] is in compliance with Directive 2014/53/EU.The full text of the EU and UK declaration of conformity is available at the following internet address:
https://reolink.com/certification-compliance/

RF exposure information: The Maximum Permissible Exposure (MPE) level has been calculated based on a distance of 20cm between the device and the human body. To maintain compliance with RF exposure requirement, use product that maintain a 20cm distance between the device and human body.

Hereby, REOLINK TECHNOLOGY PTE.LTD. declares that this device is in compliance with The Product Security and Telecommunications Infrastructure (Security Requirements for Relevant Connectable Products) Regulations 2023. For the Statement of Compliance, visit the Web site:
https://reolink.com/certification-compliance/

(a)the equipment does not have a standby mode or other equivalent state in terms of energy efficiency requirements, power management function or the ability to deactivate wireless network connections mode;
(b)the power consumption of the equipment is likely to be higher than other equipment models meeting these functional requirements.

Wi-Fi Operating Frequency
Operating Frequency :
2412~2472MHz RF Power:≤20dBm(EIRP)

Bluetooth operating Frequency
OPERATING FREQUENCY :
2402~2480MHz RF Power:≤10dBm(EIRP)

Sub 1G Operating Frequency
OPERATING FREQUENCY :
868MHz RF Power:≤10dBm(EIRP)

Correct Disposal of This Product

This symbol indicates that this electrical or electronic device must not be treated as household waste at the end of its life; instead, it requires separate collection. Free collection points for recycling and reuse are available in your local area. Please contact your municipal authority for these locations. Upon request, authorized retailers may accept up to three old devices free of charge at or near the point of sale. You are required to separate old equipment from general municipal waste. Before returning the device, please remove any batteries, accumulators, or lamps that are not permanently built-in and can be removed without damage. If the device contains personal data, you are responsible for deleting it prior to disposal.

Limited Warranty

This product comes with a 2-year limited warranty that is valid only if purchased from Reolink Official Store

FCC Statement

Changes or modifications not expressly approved by the party responsible for compliance could void the user's authority to operate the equipment.

This equipment has been tested and found to comply with the limits for a Class B digital device, pursuant to Part 15 of the FCC Rules. These limits are designed to provide reasonable protection against harmful interference in a residential installation. This equipment generates uses and can radiate radio frequency energy and, if not installed and used in accordance with the instructions, may cause harmful interference to radio communications. However, there is no guarantee that interference will not occur in a particular installation. If this equipment does cause harmful interference to radio or television reception, which can be determined by turning the equipment off and on, the user is encouraged to try to correct the interference by one or more of the following measures:

-- Reorient or relocate the receiving antenna.

-- Increase the separation between the equipment and receiver.

-- Connect the equipment into an outlet on a circuit different from that to which the receiver is connected.

-- Consult the dealer or an experienced radio/TV technician for help

This device complies with part 15 of the FCC rules. Operation is subject to the following two conditions (1)this device may not cause harmful interference, and (2) this device must accept any interference received, including interference that may cause undesired operation.

This equipment complies with FCC radiation exposure limits set forth for an uncontrolled environment. This equipment should be installed and operated with minimum distance 20cm between the radiator & your body.

IC statement

This device contains licence-exempt transmitter(s)/receiver(s) that comply with Innovation, Science and Economic DevelopmentCanada’s licence-exempt RSS(s). Operation is subject to the following two conditions:

(1)This device may not cause interference.

(2)This device must accept any interference, including interference that may cause undesired operation of the device.

The term “IC: “ before the certification/registration number only signifies that the Industry Canada technical specifications were met.

This product meets the applicable Industry Canada technical specifications.

Cet appareil contient des émetteurs / récepteurs exemptés de licence conformes aux RSS (RSS) d'Innovation, Sciences etDéveloppement économique Canada. L'exploitation est autorisée aux deux conditions suivantes : (1) l'appareil ne doit pasproduire de brouillage,et (2) l'utilisateur de l'appareil doit accepter tout brouillage radioélectrique subi, même si le brouillage est susceptible d'en compromettre le fonctionnement.

L'émetteur/récepteur exempt de licence contenu dans le présent appareil est conforme auxCNR d'Innovation, Sciences et Développement économique Canada applicables aux appareils radio exempts de licence.

L'exploitation est autorisée aux deux conditions suivantes :

1)L'appareil ne doit pas produire de brouillage;

2)L'appareil doit accepter tout brouillage radioélectrique subi, même si le brouillage est susceptible d'en compromettre lefonctionnement.

This transmitter must not be co-located or operating in conjunction with any other antenna ortransmitter. This equipment should be installed and operated with a minimum distance of 20centimeters between the radiator and your body.

Cet émetteur ne doit pas être Co-placé ou ne fonctionnant en même temps qu'aucune autre antenne ouémetteur. Cet équipementdevrait être installé et actionné avec une distance minimum de 20 centimètres entre le radiateur et votre corps.