WARNING
BATTERY SAFETY INFORMATION

In exceptional circumstances, batteries may leak fluids that can cause a chemical burn injury or ruin your product. To avoid battery leakage:

- Do not use rechargeable batteries.

- Do not attempt to recharge non-rechargeable batteries.

- Do not mix alkaline, standard (carbon-zinc), and/or rechargeable (nickel-cadmium) batteries.

- Do not mix old and new batteries.

- Only use batteries or the same or equivalent type as recommended.

- Insert batteries with the correct polarity.

- Remove exhausted batteries from the product.

- Do not short-circuit the supply terminals.

- Dispose of batteries safety.

- Do not dispose of batteries in fire. Batteries may explode or leak.
- Sometimes a build-up of static electricity (from carpets, etc.) may cause the figure to stop working. If this happens, re-install batteries to reset the toy.
- In an environment with radio frequency interference, the product may malfunction. If this happens, re-install batteries to reset the toy.

This device complies with Part 15 of the FCC Rules. Operation is subject to the following two conditions: (1) this device may not cause harmful interference and (2) this device must accept any interference received, including interference that may cause undesired operation.

WARNING: Changes or modifications to this unit not expressly approved by the party responsible for compliance could void the user's authority to operate the equipment.

NOTE: This equipment has been tested and found to comply with the limits for a Class B digital device, pursuant to Part 15 of the FCC Rules. These limits are designed to provide reasonable protection against harmful interference in a residential installation. This equipment generates, uses, and can radiate radio frequency energy and if not installed and used in accordance with the instructions, may cause harmful interference to radio communications. However, there is no guarantee that interference will not occur in a particular installation. If this equipment does cause harmful interference to radio or television reception, which can be determined by turning the equipment off and on, the user is encouraged to try and correct the interference by one or more of the following measures:

• Reorient or relocate the receiving antenna.
• Increase the separation between the equipment and receiver.
• Connect the equipment into an outlet on a circuit different from that to which the receiver is connected.
• Consult the dealer or an experienced radio TV technician for help.

Please keep these instructions for future reference as they contain important information pertaining to this item.

Licensed By:

LITE BRITE is a trademark of Hasbro and is used with permission. ©2018 Hasbro. All Rights Reserved.

Manufactured by Basic Fun, Inc.
Boca Raton, FL 33431, USA
MADE IN CHINA

Item# 2215

Lite-Brite®

INSTRUCTIONS & ART GUIDE

Use the bonus art pieces inside, along with the six included templates!

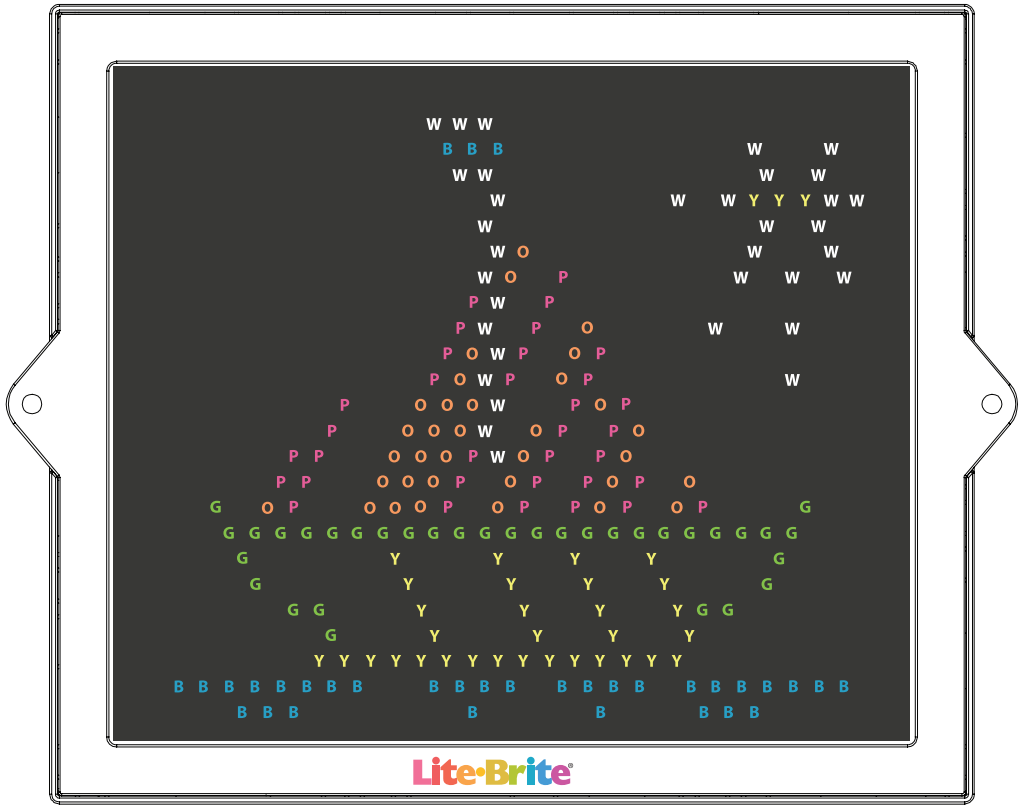

The letters tell you what color peg to insert through the paper and into the holes in the peg screen.

B	Blue	G	Green
O	Orange	Y	Yellow
W	White	P	Pink

TEMPLATE ART GUIDE

Follow these templates to create more fun designs!

Parents: You can also download these online at: www.basicfun.com

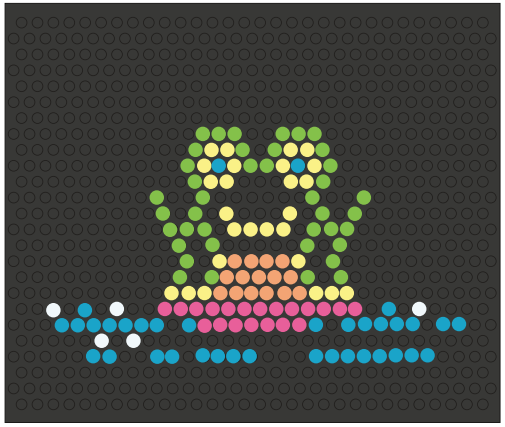

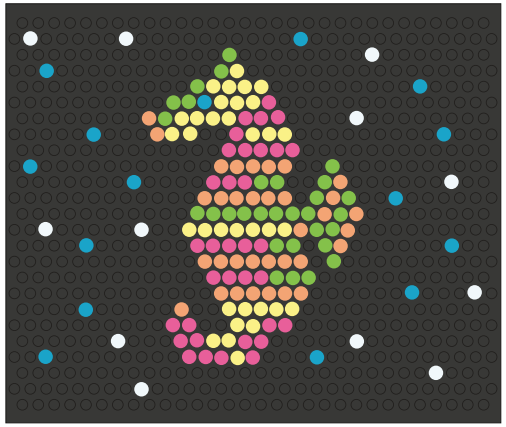

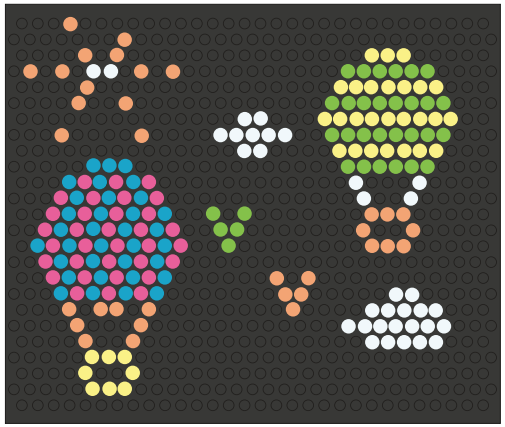

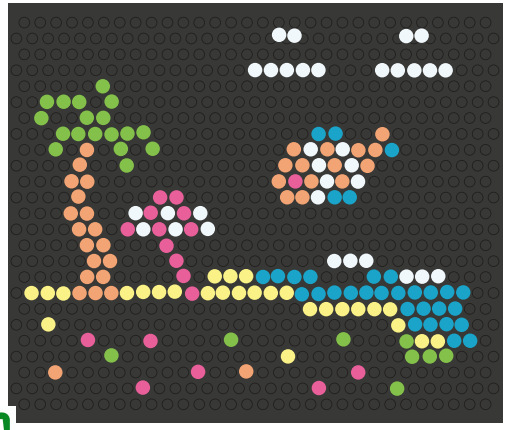

TO INSTALL BATTERIES:

1. Using a Phillips/cross head screwdriver (not included), loosen the screws in battery compartment cover (screws stay attached to cover.) Remove cover.

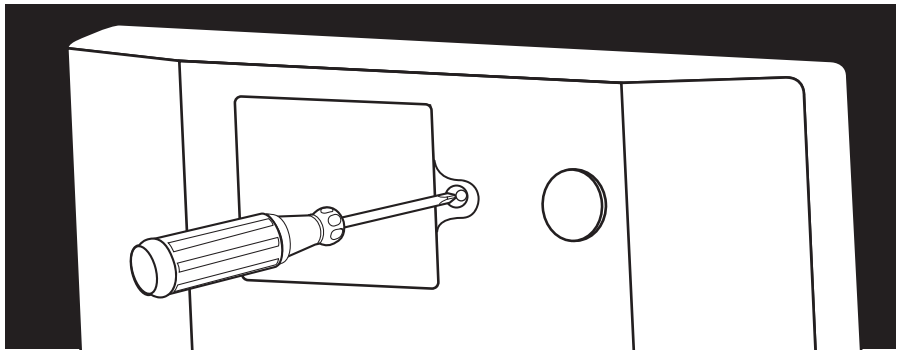
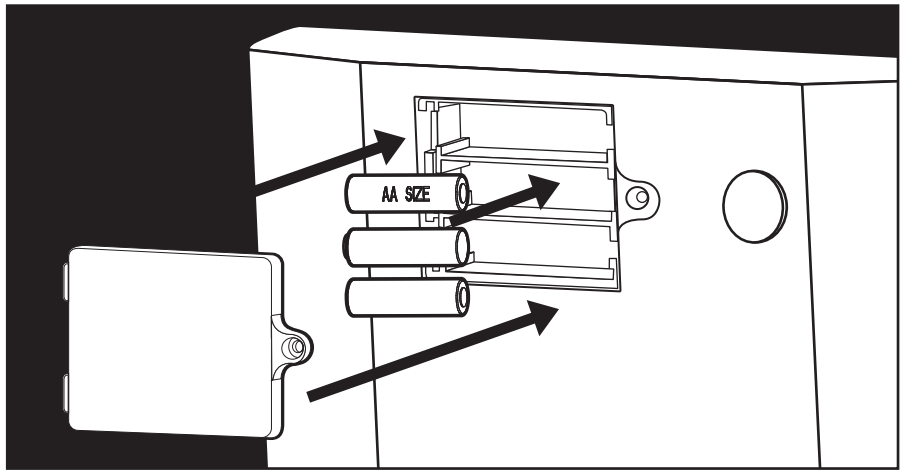
2. Insert 3 x 1.5V “AA” or R6 size batteries. Alkaline batteries recommended. Replace cover and tighten screws.