WALKING PAD TREADMILL

USER MANUAL

M4538J

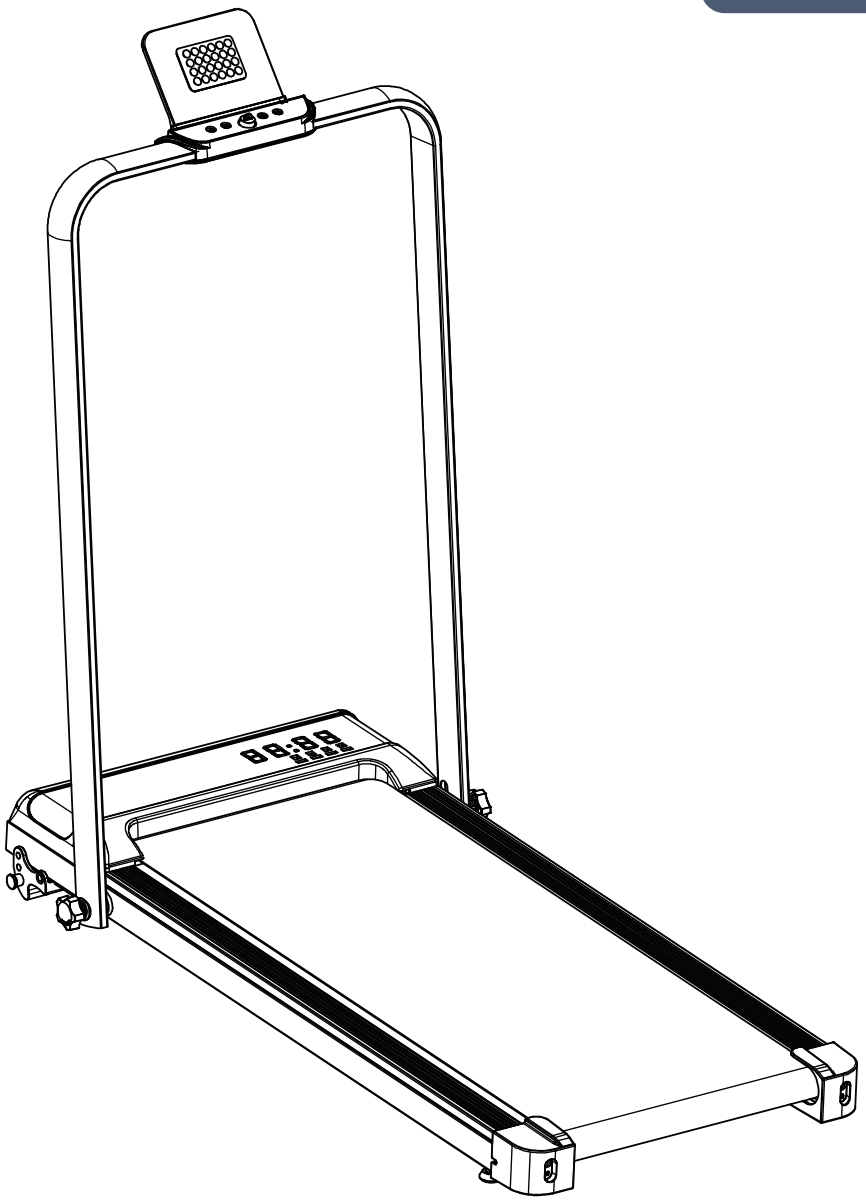

IMPORTANT:

Read all instructions carefully before using this product. Retain this owner's manual for future reference. The specifications of this product may vary from this photo, subject to change without notice.

01.TABLE OF CONTENTS

1.Product Parameter 01

2.Safety Information 02

3.Warm-up 03

4.Products Accessory 04

5.Products Structure 05

6.Function Diagram 06

7.Installation Steps 08

8.Incline Adjust 10

9.Care & Maintenance 12

10.FAQ & Solutions 13

11.Warranty 14

Email: support@ypoo.uk
Hotline: +441797905007

01.PRODUCT PARAMETER

V

Help you enjoy exercising at home!

Specification:

Model: M4538J

Color: Silvery

Horse power: 2.5HP

Speed: 0.5-5.0MPH

Shock absorption: AIR

Max weight: 300lbs

Note: The physical object shall prevail

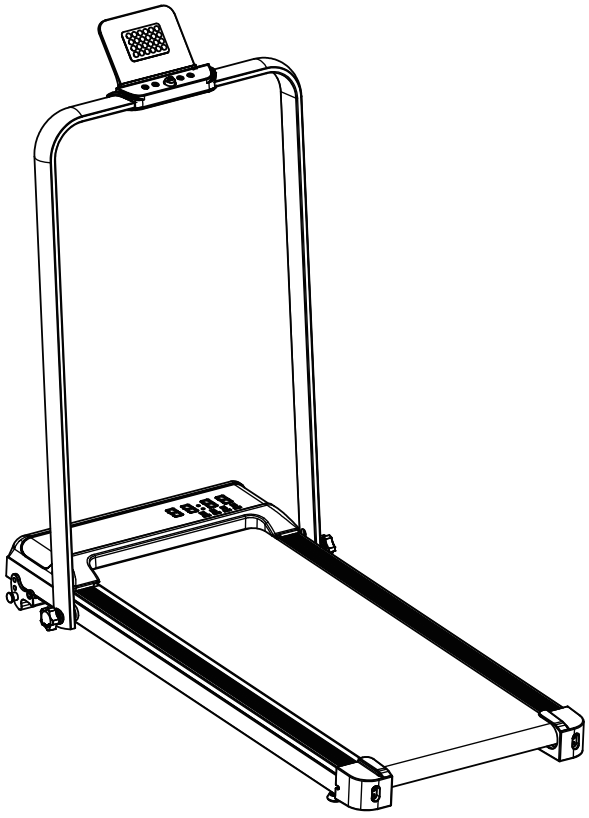

02.SAFETY INFORMATION

Please read all instructions carefully before operating this product.

Basic precautions should always be followed when using the device, including the following safety instructions:

· Please do not use the machine when you are sick, tired or drunk.
· Please wear comfortable clothes and avoid flip-flops or skirts when using this machine.
· Please start from suitable sport as excessive exercise may affect health.
· Load capacity 300LBS, overload may cause damage.
· Please ensure that all parts are not damaged and fixed before use. The device should be placed on a flat surface when used.
· Do not attempt any maintenance or adjustments other than those described in this manual.
· The device is for home use only. Do not use the device in a commercial, rental, or institutional environment.
· Only one person is allowed to use the device.
· Keep children and pets away from the device when using it.
· If you experience any chest pain, nausea, dizziness, or shortness of breath, stop exercising immediately and consult your doctor before continuing.

Warm reminder

·Please operate according to the following instructions, we are not responsible for any consequences caused by improper operation, in order to ensure your safety and avoid accidents, please read the instruction manual carefully before use!

03.WARM-UP

This routine helps improve flexibility and reduce muscle tension.

Remember to perform each stretch gently and avoid bouncing or pushing too hard.

1.Stretch down:

Bend your knees slightly with your body stretch downslowly, let yourback and shoulders relax, and try to extend your hands to touch yourtoes. Hold for 10-15 seconds and take a break for a few seconds.Repeat 3 times.

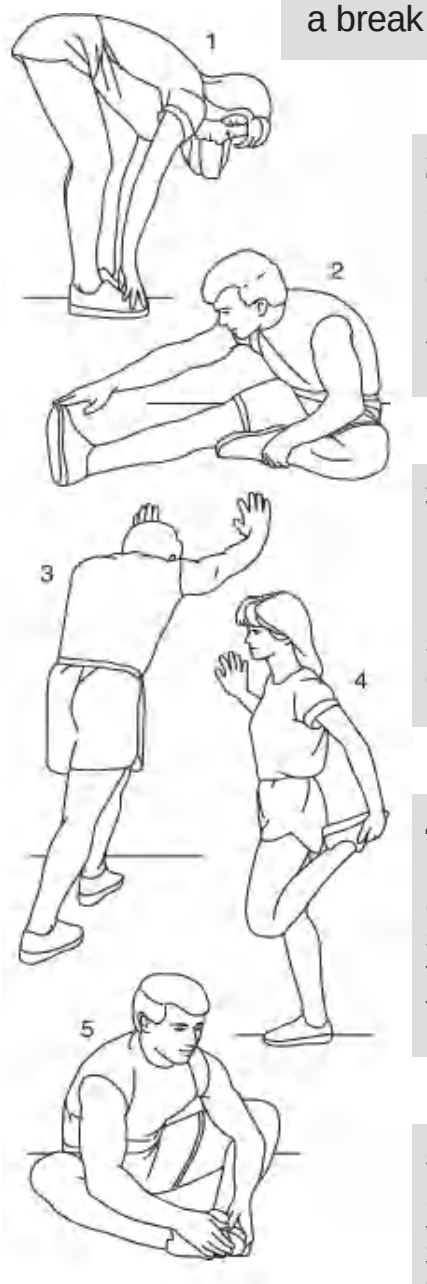

2.Hamstring stretch:

Sit down on a clean cushion, straighten one leg andplace the other leg inward towards the thigh and snug on the inside of the straight-ened leg. In the meantime,try to touch the toes of your straitened leg with the hand at the same side. Hold for 10-15 seconds and take a break for a few seconds.

3.Calf and Achilles Tendon Stretches:

Place both hands against the wall while standing with one foot behind the other, keeping your back leg straight and both heels planted on the ground while leaning against the wall. Hold for 10-15 seconds and take a break for a few seconds. Repeat 3 times for each leg.

4.Quadriceps Stretch:

Hold your body steady with your left hand holding against the w and right hand reaching back to grab your right heel and pull i slowly towards your hips, until you feel the muscle tightness a front side of your thigh. Hold for 10-15 seconds and take a bre for a few seconds.Repeat several

5.Inner thigh Stretch:

Sit on the floor with your two feet holding against each other and your knees pointing to the opposite directions, grab your feet with your hands and pull them toward your groin. Hold for 10-15 seconds and take a break for a few seconds. Repeat 3 times.

04.PRODUCTS ACCESSORIES

Please carefull check whether the contents of the package are complete and intact
If there is any missing and damage, please contact the seller

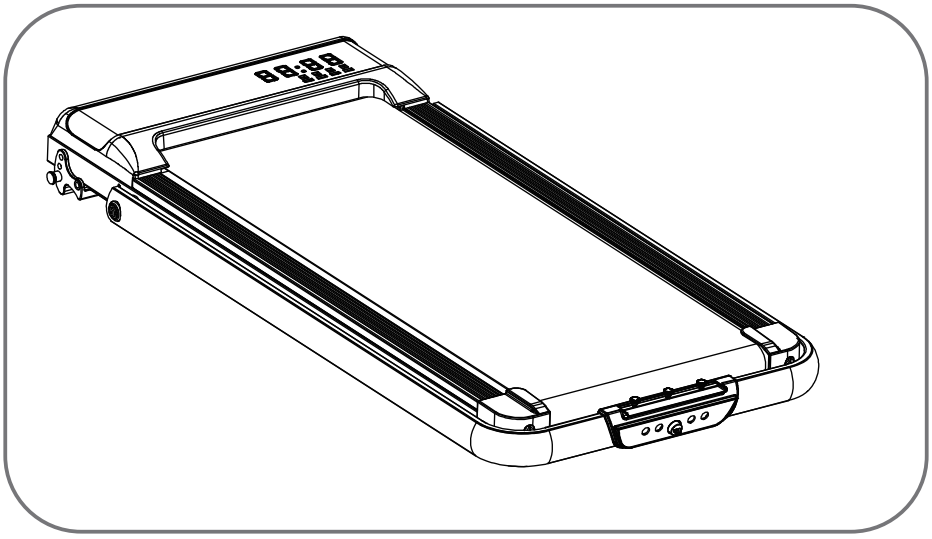

TREADMILL x 1

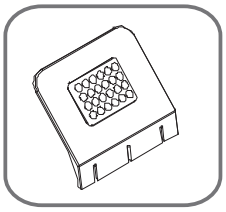

PAD FRAME x 1

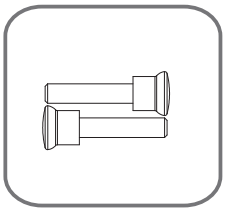

INCLINE BOLT x 2

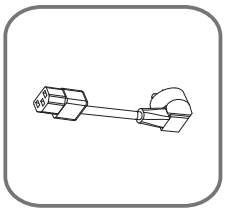

POWER CORD x 1



L STYLE WRENCH x 1

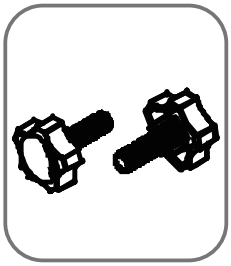

KNOB x 2

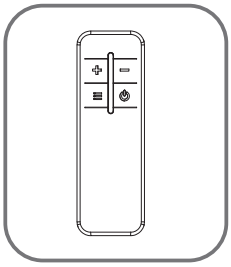

REMOTE CONTROL x 1

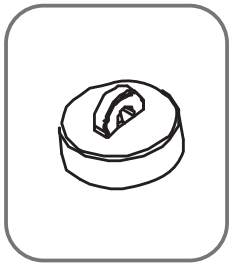

RED SAFETY LOCK x 1

SERIAL NO.	DESCRIPTION	QUANTITY	UNIT
1	TREADMILL	1	PC
2	L STYLE WRENCH	1	PC
3	KNOB	2	PC
4	REMOTE CONTROL	1	PC
5	SAFETY LOCK	1	PC
6	PAD FRAME	1	PC
7	INCLINE BOLT	2	PC
8	POWER CORD	1	PC

05.PRODUCT STRUCTURE

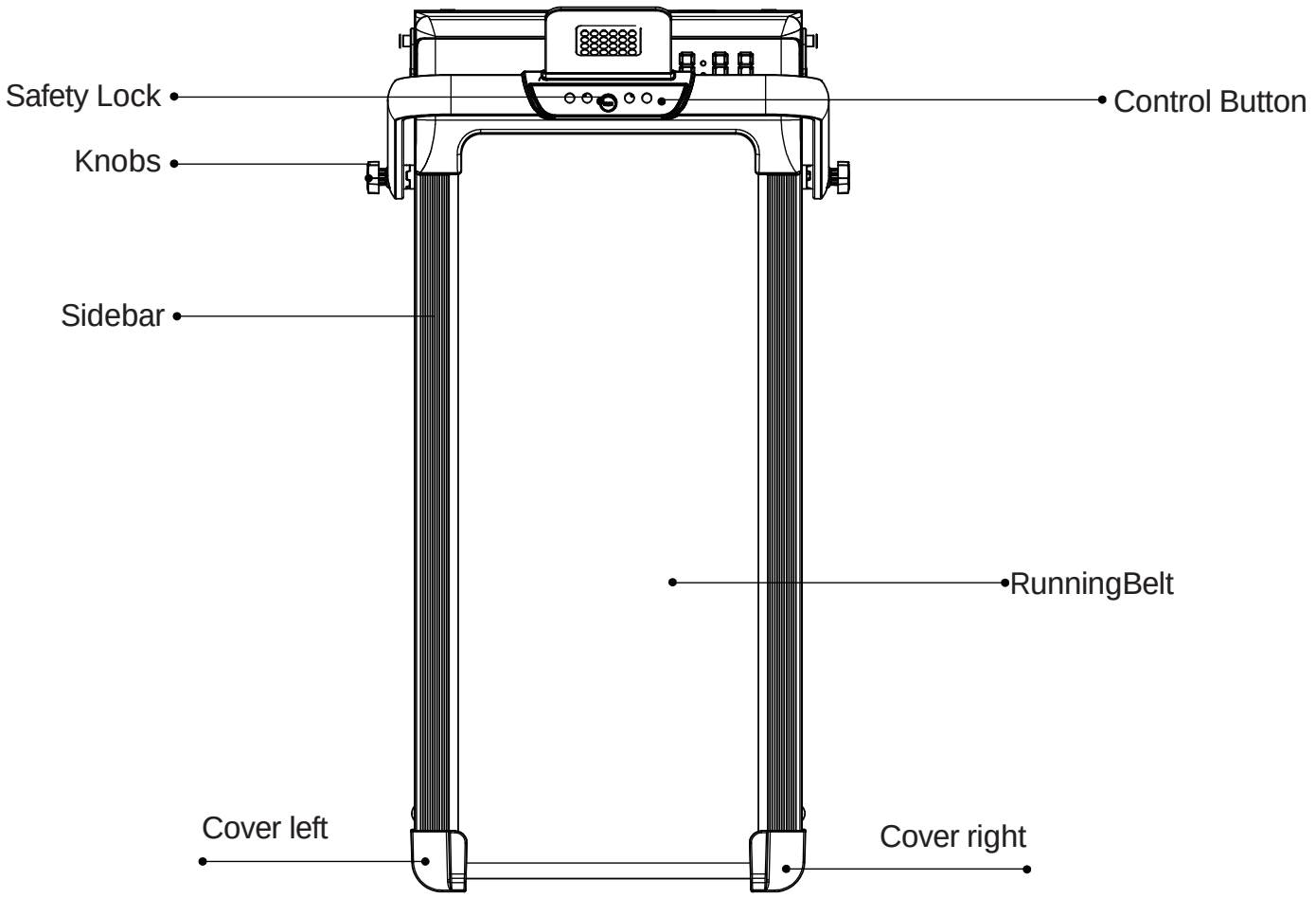

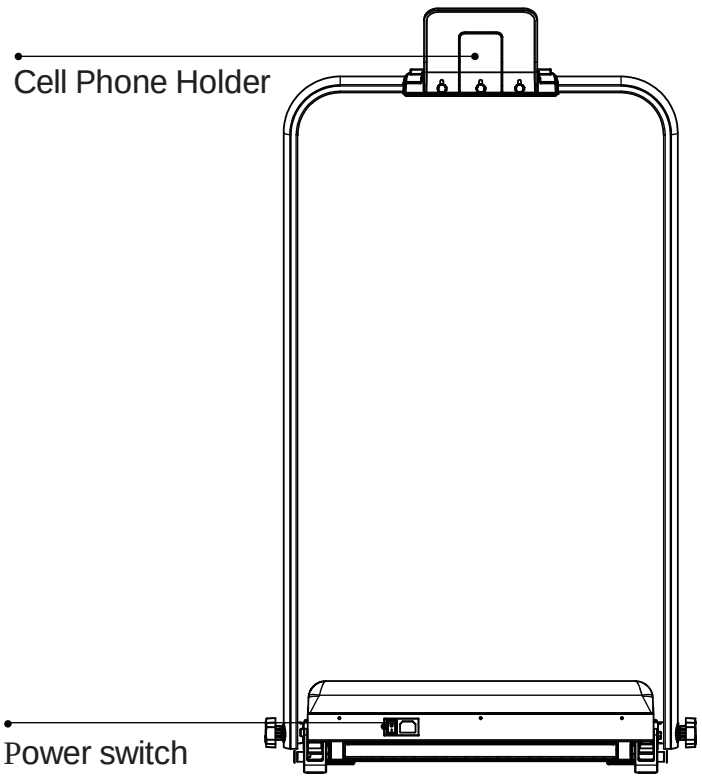

06.FUNCTION DIAGRAM

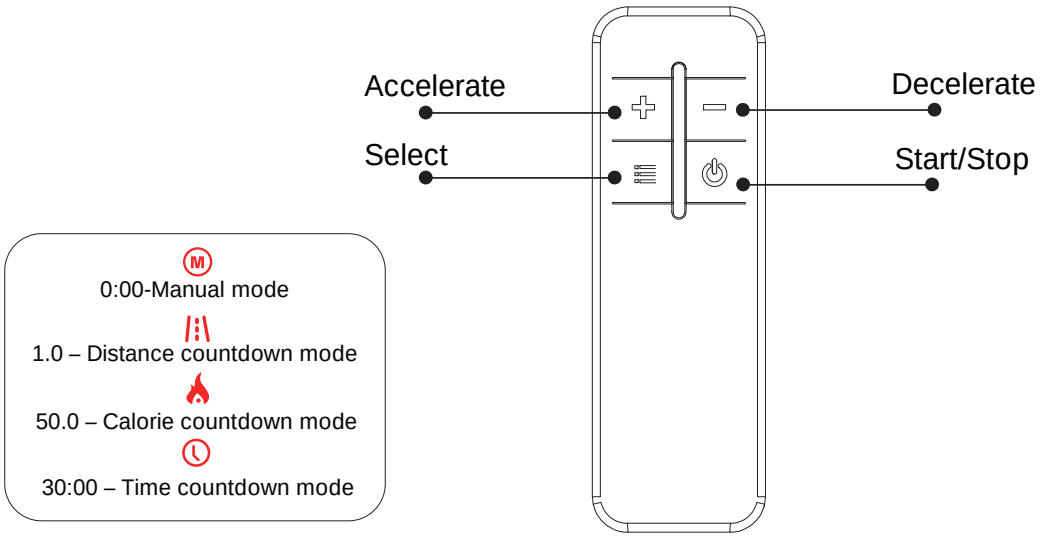

Remote Control Instructions

A.Manual Mode Function

In manual mode, press the "⏻" button to begin. The treadmill will start at 0.5 mph, and the time,distance,and calorie counters will start from 0. Press the "+" or "-" buttons to adjust the speed. After 100 minutes, the treadmill will automatically stop.

B.Countdown Mode Function

Press"☰" and you can use the speed " +" or "-" to set the parameter value, the initial running speed is 0.5 mph. After setting, press the"⏻" button to run which will automatically stop when it reaches the set value.

1.Time Countdown Mode: The window shows 10:00 minutes, set the time (5:00 to 60:00 minutes) with the speed keys.
2.Distance Countdown Mode:The window shows 1.0 mile, set the distance (1.0 to 99.0 miles) with the speed keys.
3.Calorie Countdown Mode: The window shows 50 kcal, set the target (20 to 990 kcal) with the speed keys.

Remote Control Pairing

If you have purchased two or more treadmills, you need to pair the treadmills with a remote control for 1-to-1 matching.

1.To pair: Long press the speed "+" button on the remote. After hearing three"beep" sounds, pairing is complete.
2.To unpair: Long press the speed "-" button. After three "beep" sounds,unpairing is complete.

Battery

2pc AAA battery - 1.5V

06.FUNCTION DIAGRAM

The fuction of the display panel is described

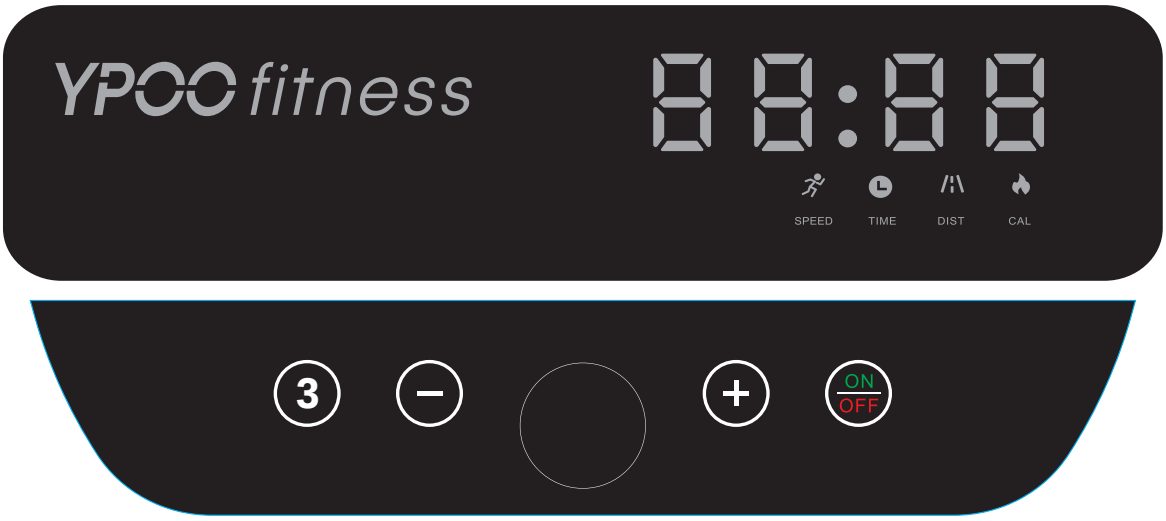

While the machine is running, the display window automatically cycles every 5 seconds, and the indicator light at the bottom changes accordingly. The information shown in each window is as follows:

(1). "Speed" window
The current speed value is displayed in the running state, and the speed is on.The display range is 0.5-5.0 MPH.
Operation de scription: initial running speed is 0.5mph, time, distance window from zero. When the exercise time exceeds 99:59 minutes, the system does not stop.

(2)."Time" window
Display exercise time. The time range is 0:00-99:59 minutes.

(3)."Distance" window
Display the moving distance, the display range is 0.00-99.9 miles, the reverse count is decremented from the set value to zero, when the counter turns to 0, the machine will steadily descend to stop.（Distance and calories switch every 5 seconds.）

(4)."Calories window"
Display the calorie consumption value, the display range is 0.00-999 kcal. The reverse count is decremented from the set value to zero, when the counter turns to 0, the machine will steadily descend to stop.

07.INSTALLATION STEPS

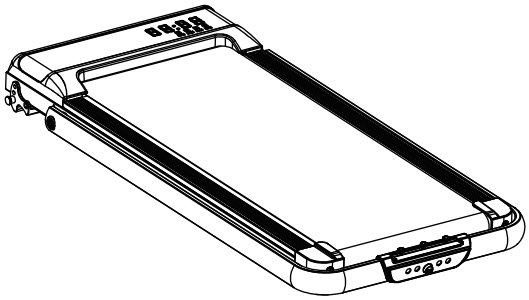

1

Open the package, take out the assembly material in the box andlay the main unit flat on the ground.

2

Method one: Pull the handle bar up, Find the red knobs is placed separately inside the OPP bag, and tighten it.Method two: You can install the konb when the handle bar is down, but you can't tighten it, When the handle bar stands up, the knob needs to be tightened.

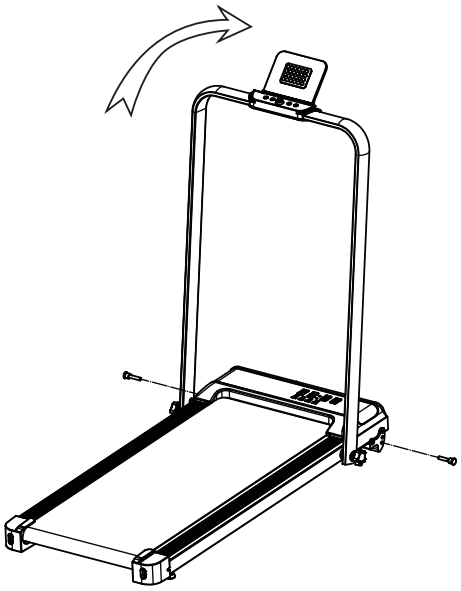

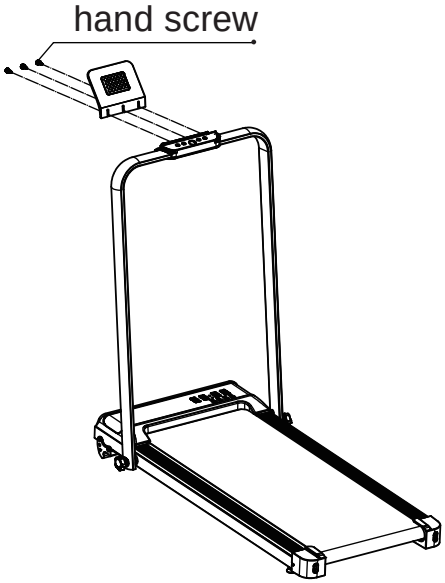

3

Insert the PAD frame.
Tighten the bolt by hand.

07.INSTALLATION STEPS

4

There is a yellow circle signon the console of thetreadmill, where the safetylock is placed, you mustplace the safety lock,otherwise the screen willdisplay "'E07"

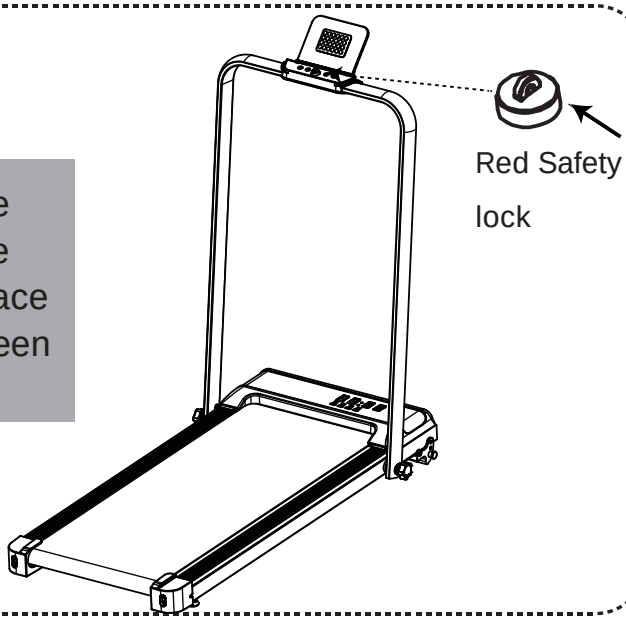

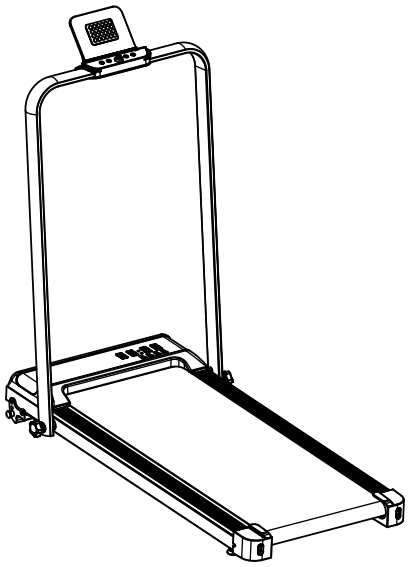

5

Treadmill installation completed the speed is 0.5 ~5.0 mph

08.INCLINE ADJUST

V

Lift the walking machine to a certain Angle, pull out the plug according to the diagram instructions, and then insert into the hole (1.2.3) position according to the appropriate slope.

Note: Make whether the holes on both sides are consistent and fixed.

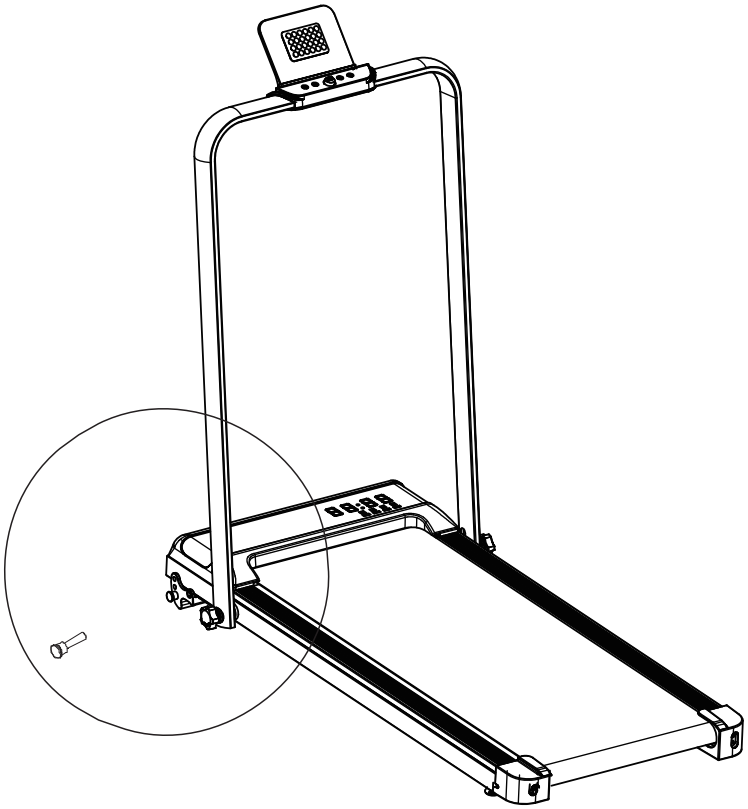

Three level manual adjustment

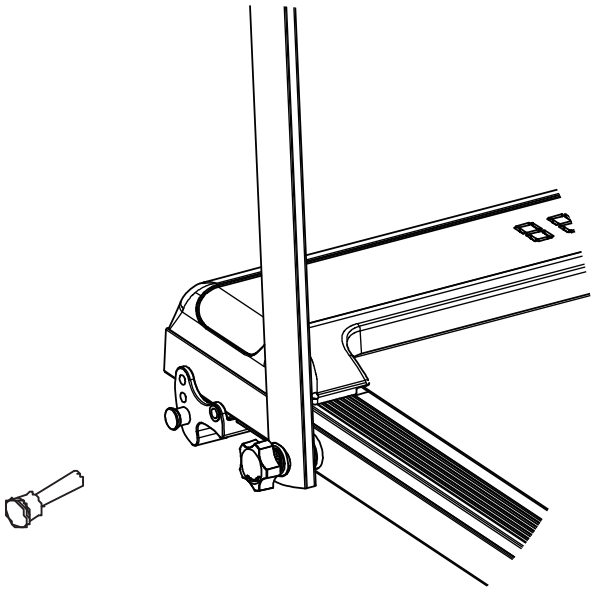

support@ypoo.uk

08.INCLINE ADJUST

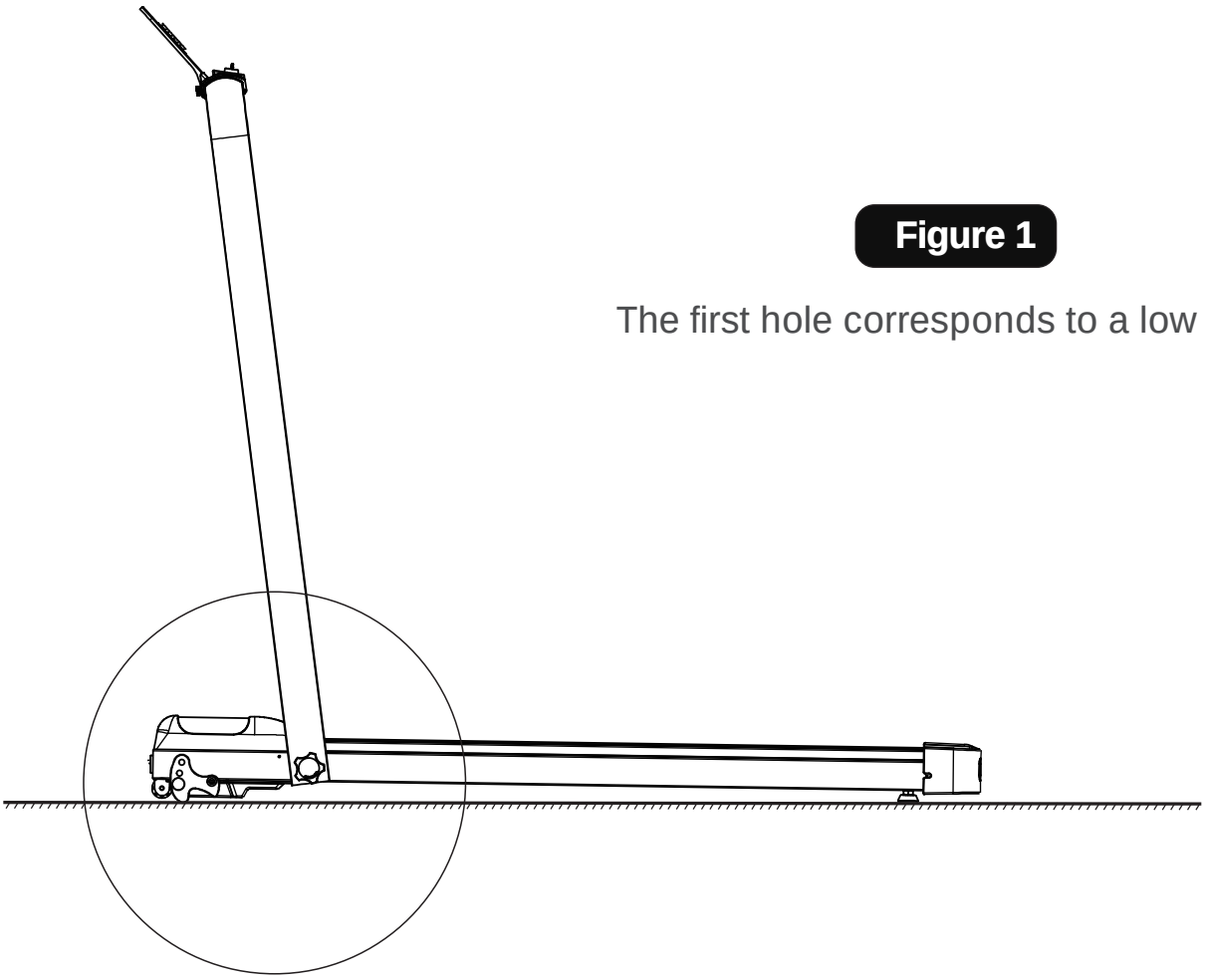

Figure 1

The first hole corresponds to a low incline

Figure 2

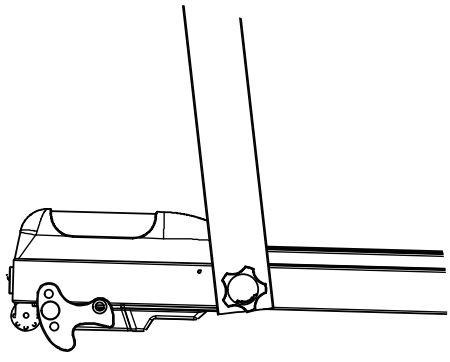

The second hole corresponds to a medium incline

Figure 3

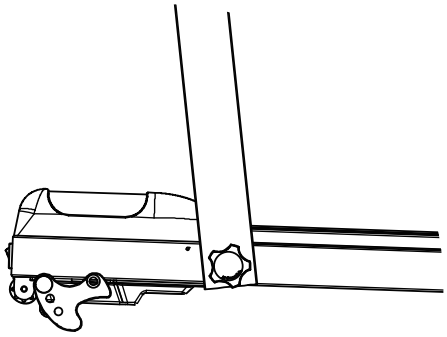

The third hole corresponds to a high incline

09.CARE & MAINTENANCE

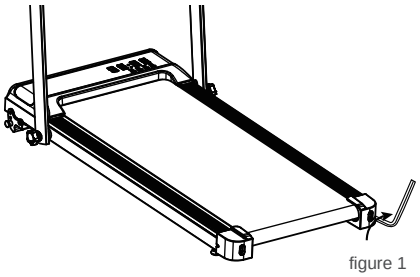

figure 1

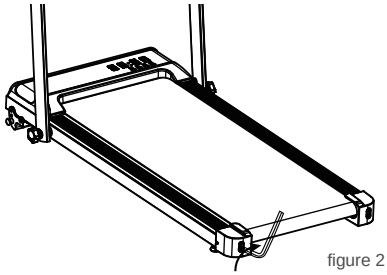

figure 2

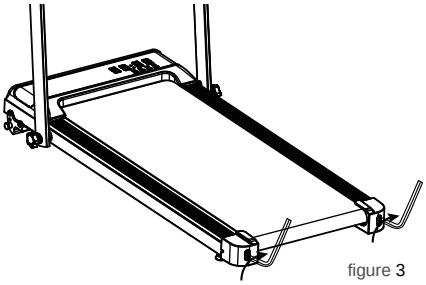

figure 3

A. **Centering walk belt process as follow:**

1. Treadmill without load and set the speed to 3mph.
2. Manual centering process as follow:

1)If the walk belt has shifted to left, use the hex tool to turn the left idler roller screw clockwise 1/4 of a turn(refer to figure 1).

2)If the walk belt has shifted to right, use the hex tool to turn the right idler roller screw clockwise 1/4 of turn(refer to figure 2)

3. Appliance MUST work 1-2 mintutes. Repeat manual centering process untill the walkbelt is centered.

Belt slip correcting process as follow:

1. Power off appliance before operation.
2. Using the hex tool, turn both idler roller screws clockwise 1/2 of turn(refer to figure 3).
3. After corrected, please attempts to walking1-2 minutes under 1.0 mph speed setting. Repeat until the walk belt is properly tightened.

Attentions

1. To prevent any injury, don't place any debris around appliance before maintenance process
2. MUST use associated hex tool.
3. Take care at maintenance process. Do not pinch fingers.

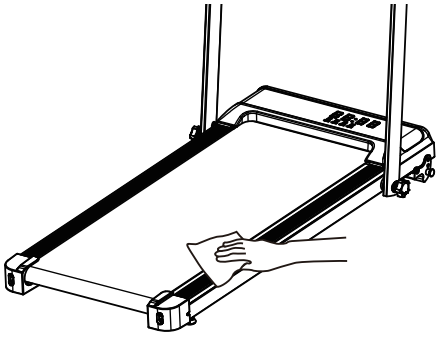

B. Appliance cleaning

1. Power off appliance and unplug power cord before cleaning.
2. Wipe and clean with damp cloth, Do not cleaning with acidic or caustic detergents.
3. Do not clean opposite of walk belt.
4. Its normal few black powders residual under appliance after long working.

10.FAQ & SOLUTIONS

Description of DC system error message alerts

Error Code	Type	Solution
E02 Main motor open circuit	Main motor wire not connected or loose	Reinforce motor connection wires
	Main motor open circuit or damaged	Replace the motor
	Controller open circuit or damaged	Replace the controller
E03 Motor overcurrent protection	Motor exceeds rated working current	Replace the motor
	Motor assembly issue causing high resistance or jamming	Inspect the treadmill structure for any problems
	Lower control current-limiting system malfunction	Replace the lower control
E06 Electronic meter communication error	Main connection between upper and lower controls is loose	Reinforce the connection
	Main connection between upper and lower controls is damaged	Replace the connection wires
	Electronic meter is damaged	Replace the electronic meter
	Controller is damaged	Replace the lower control unit
E0A APP module malfunction	APP module soldering/wiring issue	Check the connection wires
	APP module is damaged	Replace the APP module
E0C Power tube breakdown with explosion-proof protection	Power tube breakdown/controller is damaged	Replace the lower control
E07/-- Common problem solutions	Safe magnet not on the road Electronic meter security lock system failed	you need put safety lock on treadmill



11. WARRANTY

V

MANUFACTURER'S LIMITED WARRANTY

We warrants to the original purchaser that this product is free from defects in material and workmanship when used for the purpose intended, under the conditions that it has been installed and operated in accordance with owner's

COMPONENT LENGTH OF WARRANTY

Structural Frame 1 year For Home Use Only

All Other Components 90 days For Home Use Only

Exclusions from Warranty Coverage:

YPOO FITNESS does not warrant against and is not responsible for,and no implied warranty shall be deemed to cover,any product failure,product malfunction,or damages attributable to:

1.Improper installation and/or failure to abide by our installation guidelines;

2.Use of this product beyond normal home use,or in an application for which it was not designed;

3.Cosmetic items such as scratches,dents or discolorations;

4.Damage caused by normal wear and tear,vandalism, accidental or by animals;

5.Any act of Nature (such as fire, flooding, snow, ice, hurricanes, earthquakes, lightning or other natural disasters),

environm ental condition (such as air pollution,mold,mildew,etc.) or staining from foreign substances (such as dirt,grease,oil,etc.);

11. WARRANTY

YPOO FITNESS, using its sole discretion, will either repair or replace free of charge any part(s) proven to be defective under normal home use. Any repair or replacement shall provide no new warranty coverage, but shall retain only the remaining portion of the original product's warranty. This warranty is offered only to the original purchaser and is not transferable. Proof of original purchase is required.

When ordering replacement parts please have the following information ready:

1.Order Number
2.Description of Parts(Adding photos or videos would be helpful)
3.Part Number
4.Date of Purchase

Sport Makes Me Different

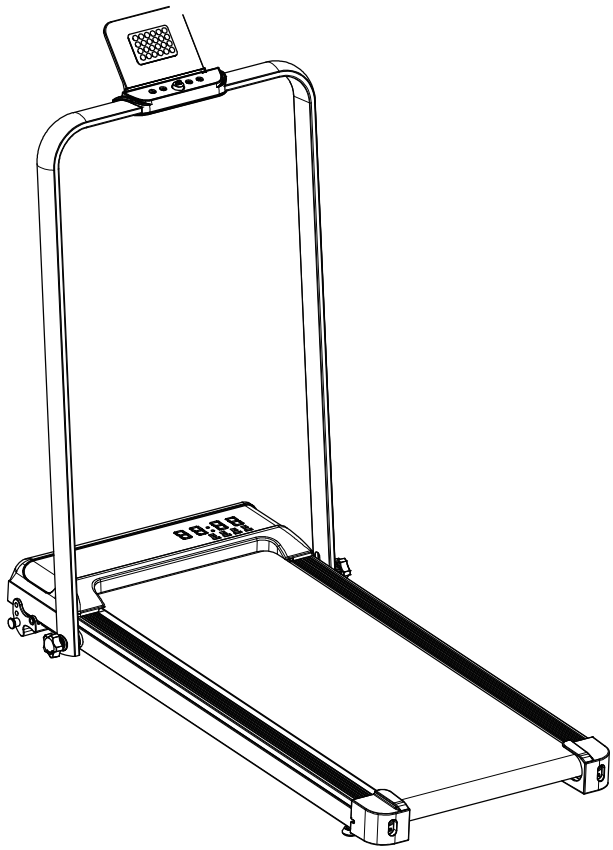

IMPORTANT:

Read all instructions carefully before using this product. Retain this owner's manual for future reference. The specifications of this product may vary from this photo, subject to change without notice.

Email:support@ypoo.uk
Hotline:+441797905007