Parts:

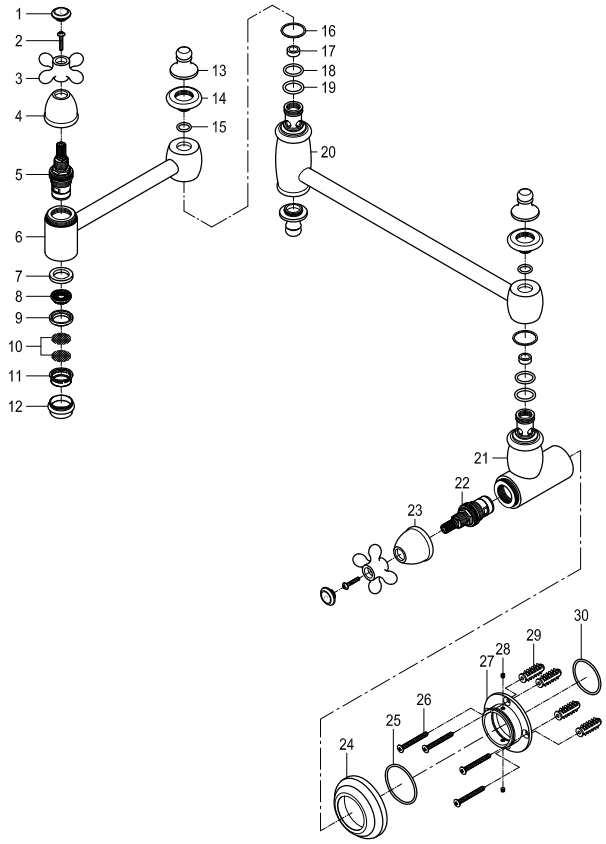

Replacement Parts:



Cartridge:
No.5 - KSRPL5100HC



Diverter Cartridge:
No.22 - KSRPL5000HC

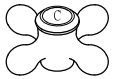

Handle: KSH3951AXC

KINGSTON
KITCHEN & BATH

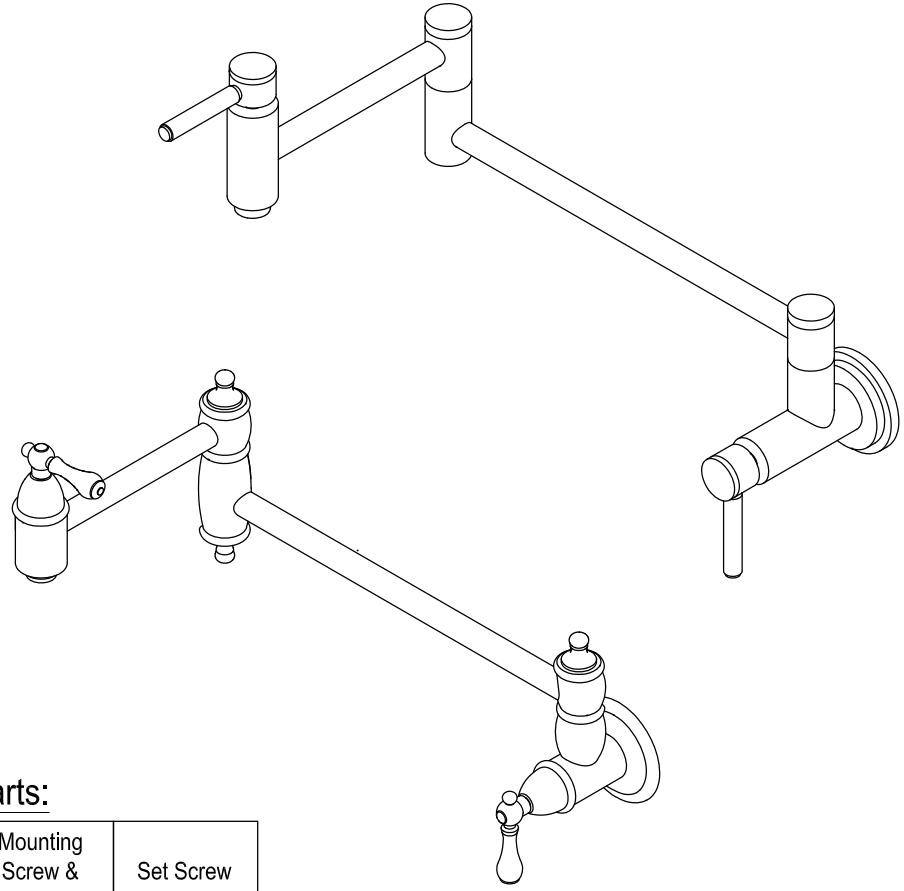

Parts:

Mounting Screw & Anchor	Set Screw
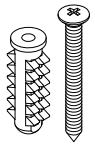	
4 Pcs	2 Pcs

www.kingstonbrass.com
TOLL-FREE CUSTOMER SERVICE: 1-877-2-KBRASS
TECHNICAL SUPPORT E-mail: service@kingstonbrass.com
12775 Reservoir Street, Chino, CA 91710

CARE AND MAINTENANCE OF YOUR FAUCET

Your Kingston Brass faucet has been finished to the most strict standards; however, due to the high content of minerals in the water, your finish may appear dull and tarnished after time. These are some do's and don'ts to maintain the luster on your faucet for many years to come.

DO
1. Use a silicon based caulking when installing.
2. Clean your faucet with only a mild soap and water solution.
3. Dry your faucet after using it.
4. Give it a coat of Carnauba Wax periodically.

DON'T
1. Use plumbers putty when installing the faucet.
2. Use any abrasive cleaning agents.

It may seem like a very simple and short list but it is that simple to maintain your faucet, looking shiny and new.

If your faucet is already looking somewhat dull and tarnished, before replacing it, try cleaning it with a 50/50 solution of vinegar and water, you may need to soak some rags and wrap around those stubborn areas, leave overnight and rinse completely in the morning, apply Carnauba wax once you have removed the mineral deposits.

NOTICE

Failure to follow all directions may cause leaks which may result in water damage

⚠CAUTION

Failure to follow all installation directions may cause product to detach from the wall and cause serious injury

KINGSTON
KITCHEN & BATH

INSTALLATION INSTRUCTIONS
Pot Filler

Need Tools:

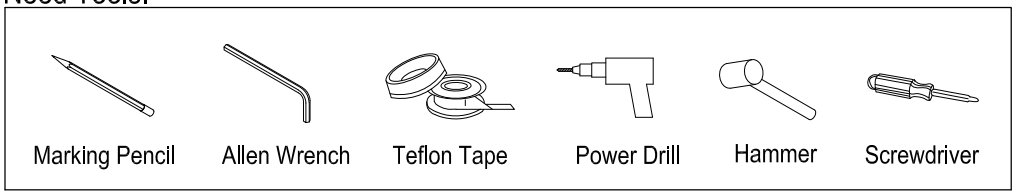

Before Beginning:

1. Install a cold water line to the desired location and flush the water line to clear any debris.
2. Shut off the valve supplying the water to that fixture.

1

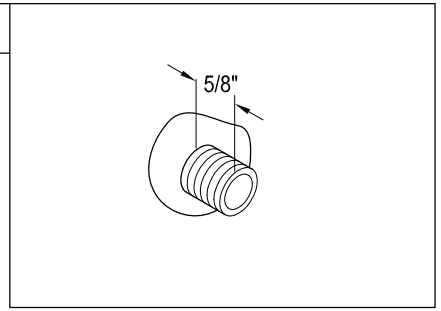

1. Plumb a 1/2"-14 NPT nipple protruding from the finished wall 5/8".

2

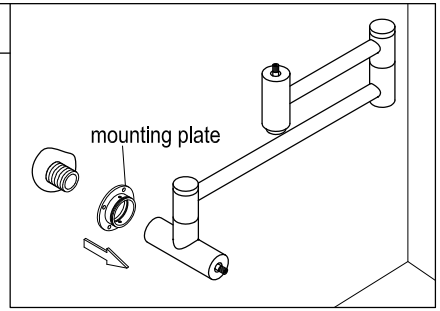

2. Insert the faucet's mounting plate onto the faucet's water inlet, make sure that the set screw hole on the mounting plate lines up with the set screw on the faucet base.

3

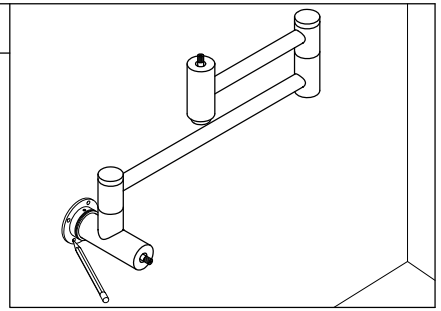

3. Thread the faucet onto the stub out, once the faucet has been fully threaded, make sure faucet is leveled properly, and mark the location of the holes on the wall. Remove the faucet and the mounting plate.

4

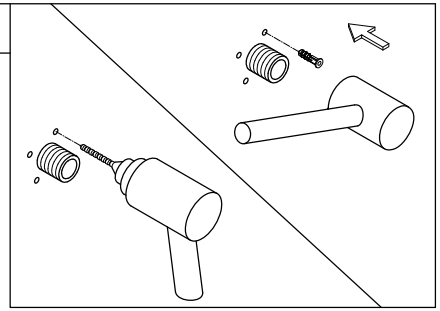

4. Drill 4-1/4" holes at the locations previously marked and using a hammer insert the anchors until they are flush with the wall.

5

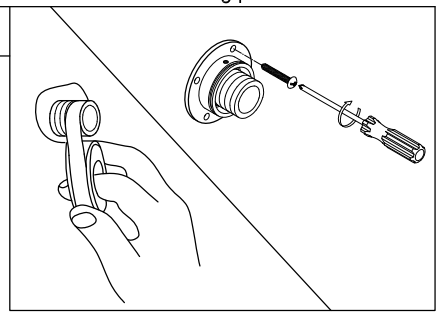

5. Apply Teflon tape on the stub-out's threads and using a Philips head screwdriver secure the mounting plate to the wall with the screws provided.

6

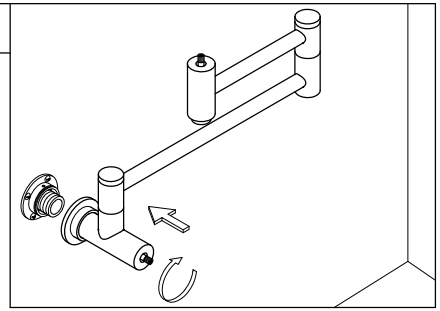

6. Insert the decorative flange onto the valve body and thread onto the stub out, make sure the faucet is leveled properly.

7

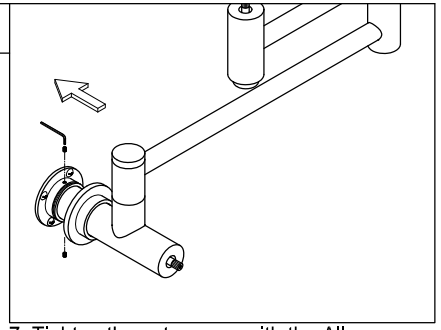

7. Tighten the set screws with the Allen wrench enclosed, slide down the decorative flange to cover the mounting plate.

8

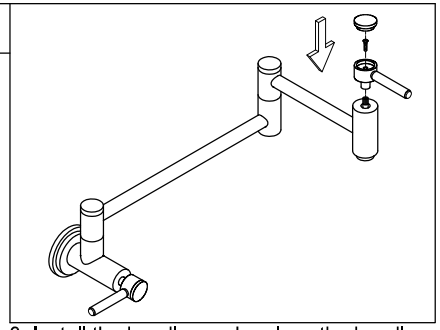

8. Install the handles and replace the handle buttons.

9

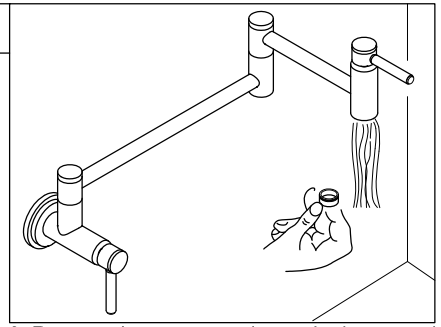

9. Remove the aerator and open both rear and front valve, let water run 30 seconds or more, while water is running check for leaks, shut-off water and replace aerator.

© 2024-02-TD Kingston Brass