Goodman
Air Conditioning & Heating

MBVB

Multi-position, Variable speed ECM-based, Modular Blower ComfortBridge™ Compatible



ComfortBridge™ technology

CoolCloud™

Contents

Air Handler Nomenclature 2
Heater Kit Nomenclature 2
Product Specifications 3
Airflow Data 4
Heat Kit Data 5
Dimensions 6
Wiring Diagram 7
Accessories 8

Product Features

- Variable-speed ECM blower motor
- Integrated communicating ComfortBridge™ Technology
- Commissioning and diagnostics via on board Bluetooth with the CoolCloud™ phone and tablet application
- Advanced configuration of the airflow and tonnage in communicating mode
- Provides constant CFM over a wide range of static pressure conditions independent of duct system
- CFM indicator
- Fault recall of six most recent faults
- Provides adjustable low CFM for efficient fan-only operation
- Improved humidity and comfort control
- Built-in compatibility with multi-stage heat pump and cooling applications
- UL 60335 2-40 Compliant
- AHRI certified; ETL listed

Cabinet Features

- Blower section usable as electric heater
- Horizontal or vertical configuration capabilities
- 21” depth for easier attic access
- Foil-faced insulation covers the internal casing to reduce cabinet condensation
- Galvanized, leather grain-embossed finish
- Cabinet air leakage less than 2% at 1.0 inch H_20 when tested in accordance with ASHRE standard 193
- Cabinet air leakage less than 1.4% at 0.5 inch H_20 when tested in accordance with ASHRE standard 193
- Field Installed 3 kW – 20 kW electric heater kits available

10 YEAR PARTS LIMITED WARRANTY*

ALL ALUMINUM COIL

Intertek

AHRI CERTIFIED

COMPANY WITH QUALITY SYSTEM CERTIFIED BY DNV GL = ISO 9001 =

COMPANY WITH ENVIRONMENTAL SYSTEM CERTIFIED BY DNV GL = ISO 14001 =

BBB ACCREDITED BUSINESS

* Complete warranty details available from your local dealer or at www.goodmanmfg.com. To receive the 10-Year Parts Limited Warranty, online registration must be completed within 60 days of installation. Online registration is not required in California or Québec. The duration of warranty coverage in Texas and Florida differs in some cases..

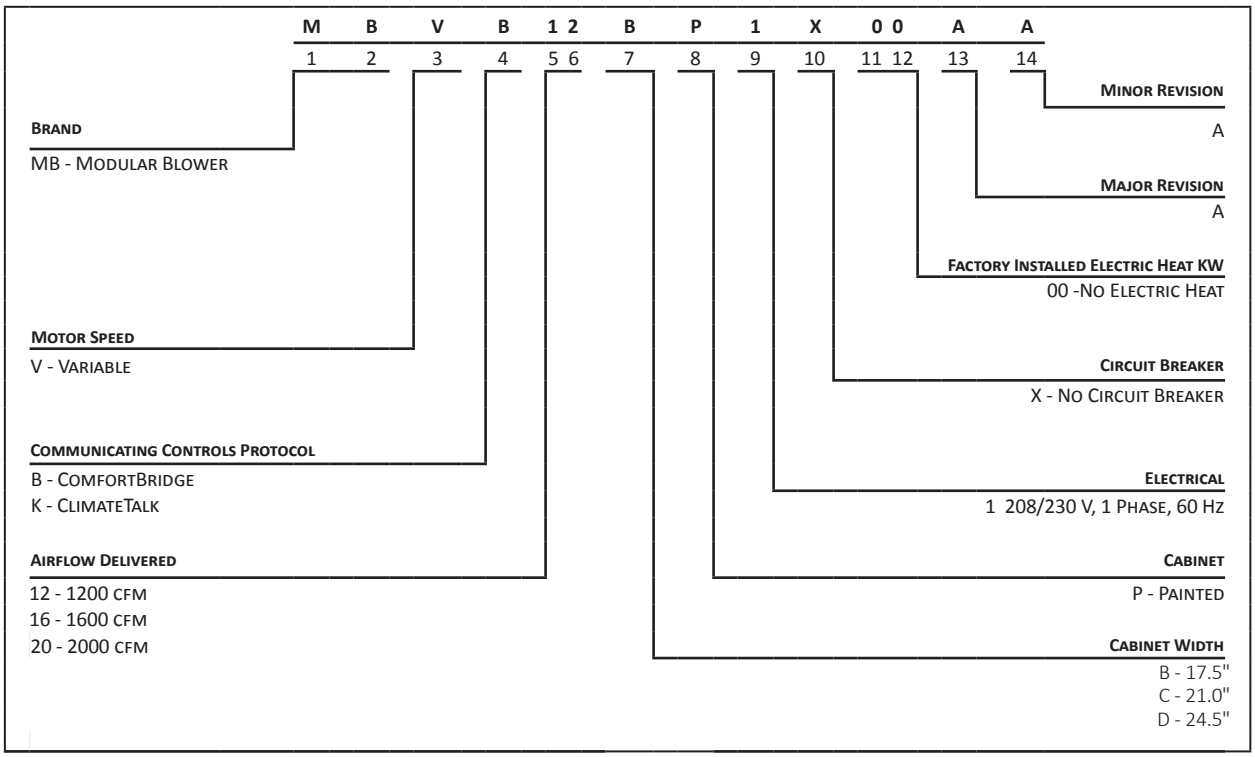
M B V B 1 2 B P 1 X 0 0 A A
1 2 3 4 5 6 7 8 9 10 11 12 13 14
BRAND
MB - MODULAR BLOWER
MOTOR SPEED
V - VARIABLE
COMMUNICATING CONTROLS PROTOCOL
B - COMFORTBRIDGE
K - CLIMATETALK
AIRFLOW DELIVERED
12 - 1200 CFM
16 - 1600 CFM
20 - 2000 CFM
MINOR REVISION
A
MAJOR REVISION
A
FACTORY INSTALLED ELECTRIC HEAT KW
00 -NO ELECTRIC HEAT
CIRCUIT BREAKER
X - NO CIRCUIT BREAKER
ELECTRICAL
1 208/230 V, 1 PHASE, 60 HZ
CABINET
P - PAINTED
CABINET WIDTH
B - 17.5"
C - 21.0"
D - 24.5"

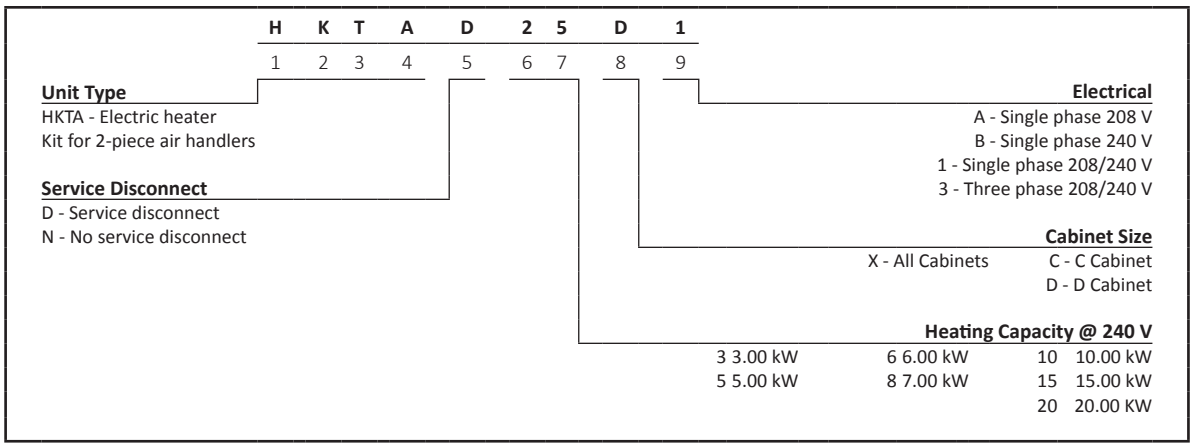
H K T A D 2 5 D 1
1 2 3 4 5 6 7 8 9
Unit Type
HKTA - Electric heater
Kit for 2-piece air handlers
Service Disconnect
D - Service disconnect
N - No service disconnect
Electrical
A - Single phase 208 V
B - Single phase 240 V
1 - Single phase 208/240 V
3 - Three phase 208/240 V
Cabinet Size
X - All Cabinets
C - C Cabinet
D - D Cabinet
Heating Capacity @ 240 V
3 3.00 kW
5 5.00 kW
6 6.00 kW
8 7.00 kW
10 10.00 kW
15 15.00 kW
20 20.00 KW

MODEL	MBVB12BP1X00	MBVB16CP1X00	MBVB20DP1X00
BLOWER			
Diameter	10"	10"	11"
Width	8"	8"	10"
ELECTRICAL DATA			
Voltage (V)	208/230	208/230	208/230
MCA (A)	4.9	6.5	6.5
MOP (A)	15		
Blower Motor Power (HP)	½	¾	¾
Dimensions			
Width	17½"	21"	24½"
Depth	21"	21"	21"
Height	26"	30"	30"
SHIP WEIGHT (LBS.)	67	80	86

- Minimum Circuit Ampacity and Maximum Overcurrent Protection Device (MOD) for blower without supplemental heat installed. Refer to unit nameplate for these specifications with approved accessory heaters installed.
- Condensate management kits are available for units installed in high temperature and high humidity areas. Kit number MBK0002 has been developed to resolve condensate issues in the field and is available from the Service Parts Department. Refer to IO-849 for installation instructions.

MODEL	SPEED TAP	SPEED	0.1	0.2	0.3	0.4	0.5	0.6	0.7	0.8	0.9
MBVB12 BP1X00A*	A	Low	420	415	400	400	395	390	390	390	380
	B	Low	550	545	540	540	535	530	530	525	520
	C	Low	680	675	670	665	660	655	655	650	640
	D	Low	810	805	800	800	800	795	790	785	785
	A	High	615	605	600	600	595	590	590	585	580
	B	High	805	805	800	800	800	795	790	785	780
	C	High	1010	1005	1000	1000	995	995	990	985	975
	D	High	1210	1205	1200	1200	1200	1195	1195	1190	1180
MBVB16 CP1X00A*	A	Low	690	680	670	665	660	655	625	595	575
	B	Low	850	830	800	795	790	785	775	750	725
	C	Low	980	970	940	935	930	910	890	865	860
	D	Low	1110	1085	1070	1055	1045	1025	1000	990	975
	A	High	1045	1015	1000	990	975	950	935	920	900
	B	High	1245	1215	1200	1180	1175	1165	1150	1130	1115
	C	High	1415	1410	1400	1365	1360	1350	1340	1330	1320
	D	High	1605	1600	1600	1540	1530	1520	1510	1500	1490
MBVB20 DP1X00A*	A	Low	835	815	800	800	795	795	790	775	750
	B	Low	1075	1070	1070	1065	1050	1045	1045	1040	1035
	C	Low	1210	1205	1200	1200	1195	1190	1190	1185	1175
	D	Low	1345	1340	1340	1320	1320	1315	1315	1305	1305
	A	High	1210	1205	1200	1195	1150	1150	1145	1135	1115
	B	High	1610	1605	1600	1540	1535	1535	1530	1520	1510
	C	High	1830	1805	1800	1785	1760	1760	1755	1750	1715
	D	High	2020	2010	2000	1995	1995	1970	1970	1965	1955

COOLING AND HEAT PUMP AIRFLOW

S1	S2	SPEED TAP	MBVB12BP1X00 AIRFLOW (SCFM)	MBVB16CP1X00 AIRFLOW (SCFM)	MBVB20DP1X00 AIRFLOW (SCFM)
off	off	A	600	1000	1200
on	off	B	800	1200	1600
off	on	C	1000	1400	1800
on	on	D	1200	1600	2000

COOLING / HP / AUX TRIM			COOLING PROFILE		
S3	S4	Trim Value	S5	S6	
off	off	0	off	off	A
on	off	10%	on	off	B
off	on	-10%	off	on	C
on	on	0	on	on	D

HEAT KIT AIRFLOW

S9	S10	S11	HEATER KW	MBVB12BP1X00 AIRFLOW (SCFM)	MBVB16CP1X00 AIRFLOW (SCFM)	MBVB20DP1X00 AIRFLOW (SCFM)
off	off	on	20	NA	NA	2000
off	on	off	15	1400	1500	1500
off	on	on	10	1000	1000	1200
on	off	off	8	740	1000	1000
on	off	on	6	635	800	800

Models	Circuit 1 (208V/240V)			Circuit 2 (208V/240V)			Single-Point Kit (208V/240V)	
	Heater Amps	MCA[1]	MOP[2]	Heater Amps	MCA[1]	MOP[2]	MCA[1]	MOP[2]
MBVB12BP1X00AB	0/0	4.9/4.9	15/15	---	---	---	---	---
HKTAN031	10.8/12.5	18.4/20.5	20/25	---	---	---	---	---
HKTA*051	18.1/20.8	27.4/30.9	30/35	---	---	---	---	---
HKTAN061	21.7/25.0	32.0/36.1	35/40	---	---	---	---	---
HKTA*081	25.3/29.2	36.5/41.3	40/45	---	---	---	---	---
HKTA*101	36.1/41.7	50.0/57.0	50/60	---	---	---	---	---
HKTAD151	36.1/41.7	50.0/57.0	50/60	18/20.8	22.5/26.0	25/30	72.6/83.0	80/90
MBVB16CP1X00AB	0/0	6.5/6.5	15/15	---	---	---	---	---
HKTAN031	10.8/12.5	20.0/22.1	20/25	---	---	---	---	---
HKTA*051	18.1/20.8	29.1/32.5	30/35	---	---	---	---	---
HKTAN061	21.7/25.0	33.6/37.8	35/40	---	---	---	---	---
HKTA*081	25.3/29.2	38.1/43.0	40/45	---	---	---	---	---
HKTA*101	36.1/41.7	51.6/58.6	60/60	---	---	---	---	---
HKTAD151	36.1/41.7	51.6/58.6	60/60	18/20.8	22.5/26.0	25/30	74.2/84.6	80/90
MBVB20DP1X00AB	0/0	6.5/6.5	15/15	---	---	---	---	---
HKTAN031	10.8/12.5	20.0/22.1	20/25	---	---	---	---	---
HKTA*051	18.1/20.8	29.1/32.5	30/35	---	---	---	---	---
HKTAN061	21.7/25.0	33.6/37.8	35/40	---	---	---	---	---
HKTA*081	25.3/29.2	38.1/43.0	40/45	---	---	---	---	---
HKTA*101	36.1/41.7	51.6/58.6	60/60	---	---	---	---	---
HKTAD151	36.1/41.7	51.6/58.6	60/60	18/20.8	22.5/26.0	25/30	74.2/84.6	80/90
HKTAD201	36.1/41.7	51.6/58.6	60/60	36.1/41.7	45.2/52.1	50/60	96.8/111	100/125

All ampacities noted above include air handler motor amps

Circuit 1: Single-phase for Air Handlers / Circuit 2: Three-phase for HKR3 Heater Kits

[1] Minimum Circuit Ampacity (Heater Amps + Motor Amps) X 1.25

[2] Maximum Overcurrent Protection = 2.25 X Motor Amps + Heater Amps

* D - Service disconnect, N - No service disconnect

--- indicates Not Required

Heating kW Correction Factor

Supply Voltage	240	230	220	210	208
Correction Factor	1.00	0.92	0.84	0.77	0.75

Multiply the 240-volt heating capacity by correction factors.

Side and Front Views

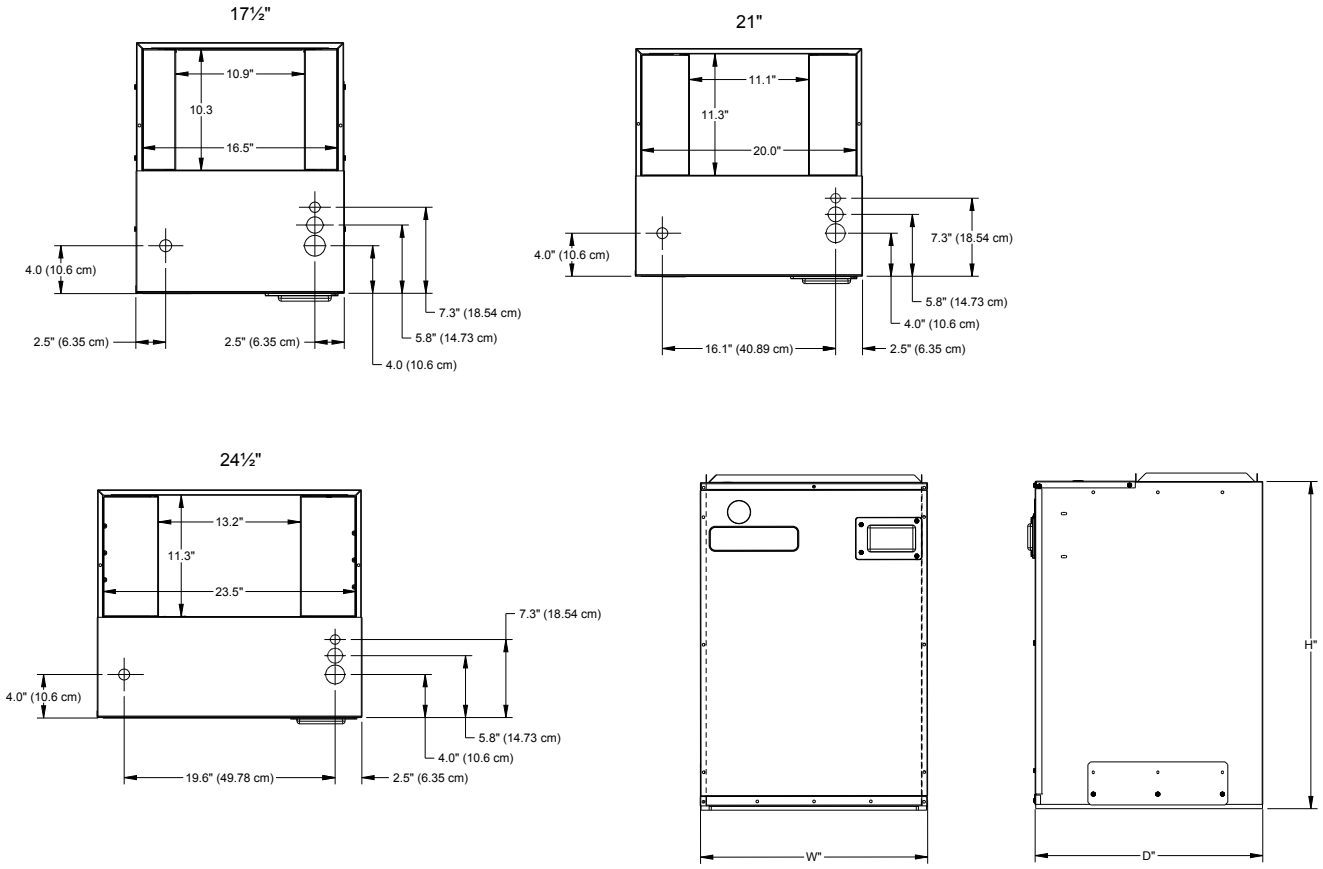

Model	Dimensions		
	Width	Depth	Height
MBVB12BP1X00	17½"	21"	26"
MBVB16CP1X00	21"	21"	30"
MBVB20DP1X00	24½"	21"	30"

Top View

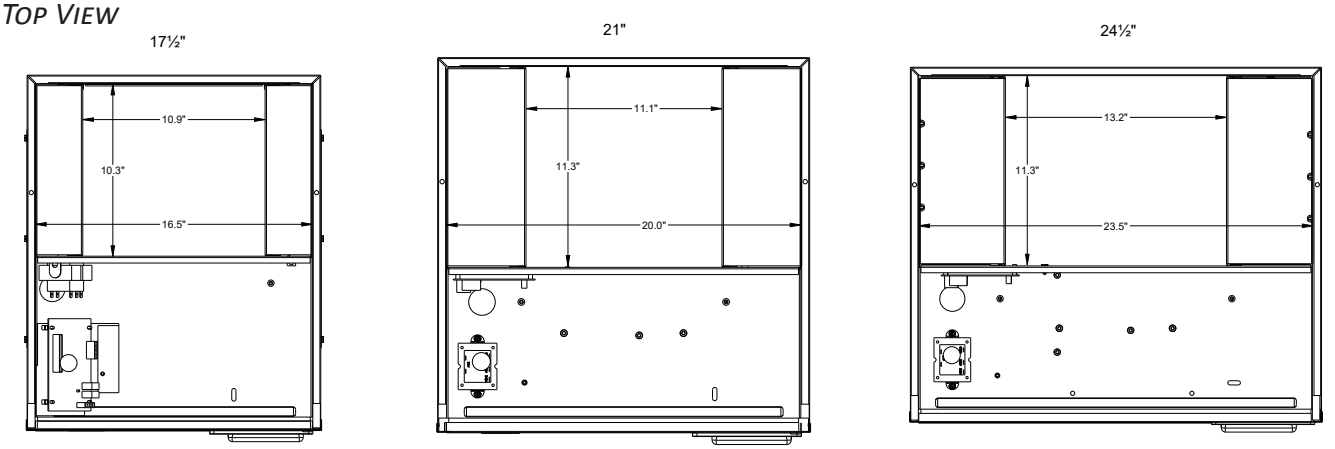

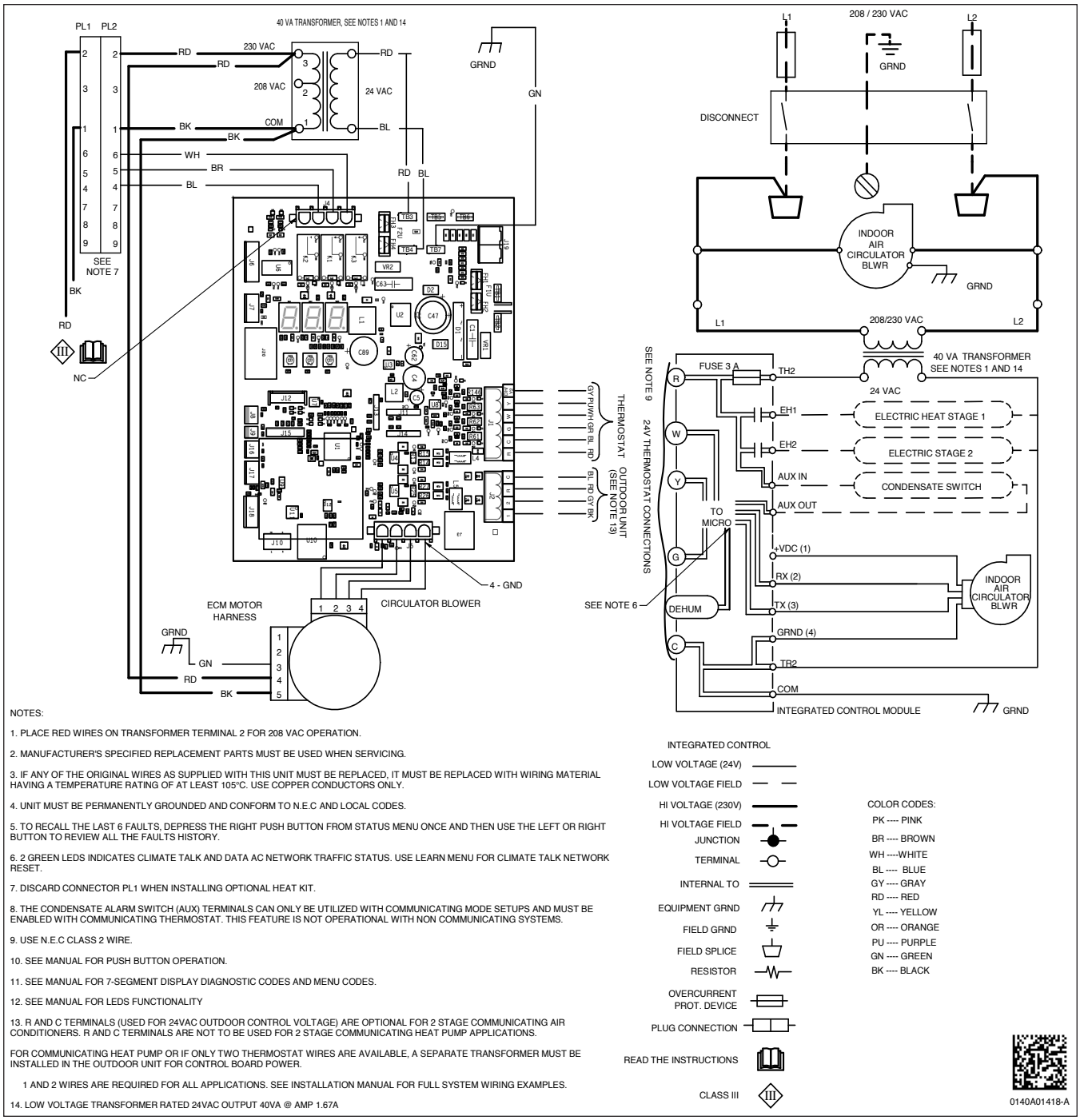

NOTES:

1. PLACE RED WIRES ON TRANSFORMER TERMINAL 2 FOR 208 VAC OPERATION.
2. MANUFACTURER'S SPECIFIED REPLACEMENT PARTS MUST BE USED WHEN SERVICING.
3. IF ANY OF THE ORIGINAL WIRES AS SUPPLIED WITH THIS UNIT MUST BE REPLACED, IT MUST BE REPLACED WITH WIRING MATERIAL HAVING A TEMPERATURE RATING OF AT LEAST 105°C. USE COPPER CONDUCTORS ONLY.
4. UNIT MUST BE PERMANENTLY GROUNDED AND CONFORM TO N.E.C AND LOCAL CODES.
5. TO RECALL THE LAST 6 FAULTS, DEPRESS THE RIGHT PUSH BUTTON FROM STATUS MENU ONCE AND THEN USE THE LEFT OR RIGHT BUTTON TO REVIEW ALL THE FAULTS HISTORY.
6. 2 GREEN LEDS INDICATES CLIMATE TALK AND DATA AC NETWORK TRAFFIC STATUS. USE LEARN MENU FOR CLIMATE TALK NETWORK RESET.
7. DISCARD CONNECTOR PL1 WHEN INSTALLING OPTIONAL HEAT KIT.
8. THE CONDENSATE ALARM SWITCH (AUX) TERMINALS CAN ONLY BE UTILIZED WITH COMMUNICATING MODE SETUPS AND MUST BE ENABLED WITH COMMUNICATING THERMOSTAT. THIS FEATURE IS NOT OPERATIONAL WITH NON COMMUNICATING SYSTEMS.
9. USE N.E.C CLASS 2 WIRE.
10. SEE MANUAL FOR PUSH BUTTON OPERATION.
11. SEE MANUAL FOR 7-SEGMENT DISPLAY DIAGNOSTIC CODES AND MENU CODES.
12. SEE MANUAL FOR LEDS FUNCTIONALITY
13. R AND C TERMINALS (USED FOR 24VAC OUTDOOR CONTROL VOLTAGE) ARE OPTIONAL FOR 2 STAGE COMMUNICATING AIR CONDITIONERS. R AND C TERMINALS ARE NOT TO BE USED FOR 2 STAGE COMMUNICATING HEAT PUMP APPLICATIONS.

FOR COMMUNICATING HEAT PUMP OR IF ONLY TWO THERMOSTAT WIRES ARE AVAILABLE, A SEPARATE TRANSFORMER MUST BE INSTALLED IN THE OUTDOOR UNIT FOR CONTROL BOARD POWER.

1 AND 2 WIRES ARE REQUIRED FOR ALL APPLICATIONS. SEE INSTALLATION MANUAL FOR FULL SYSTEM WIRING EXAMPLES.

14. LOW VOLTAGE TRANSFORMER RATED 24VAC OUTPUT 40VA @ AMP 1.67A

INTEGRATED CONTROL
LOW VOLTAGE (24V)
LOW VOLTAGE FIELD
HI VOLTAGE (230V)
HI VOLTAGE FIELD
JUNCTION
TERMINAL
INTERNAL TO
EQUIPMENT GRND
FIELD GRND
FIELD SPLICE
RESISTOR
OVERCURRENT PROT. DEVICE
PLUG CONNECTION
READ THE INSTRUCTIONS
CLASS III

COLOR CODES:
PK ---- PINK
BR ---- BROWN
WH ----WHITE
BL ---- BLUE
GY ---- GRAY
RD ---- RED
YL ---- YELLOW
OR ---- ORANGE
PU ---- PURPLE
GN ---- GREEN
BK ---- BLACK

0140A01418-A

⚠ WARNING | ***High Voltage:*** Disconnect all power before servicing or installing this unit. Multiple power sources may be present. Failure to do so may cause property damage, personal injury, or death. ⚡

Wiring is subject to change. Always refer to the wiring diagram on the unit for the most up-to-date wiring.

SINGLE POINT KIT

	HKTAD151	HKTAD201
SPW-01	X	X

Can only be installed along with the above heat kits. This kit will fit any MBVK blower as long as a compatible heat kit is installed in the unit.

MBVB BLOWER PERFORMANCE DATA DIPSWITCH SUMMARY

Dipswitch Number	Function	Default Setting
S1 - S2*	Cooling / HP Airflow A/B/C/D	Airflow D
S3 - S4*	Cooling / HP / Aux Trim (-10%, 0, +10%)	No Trim
S5 - S6*	Cooling Profile A,B,C,D	Profile 1
S7*	Dehum (on/off)	Off
S8	Unused	On
S9 - S11	Heater Kit Kw	Off/Off/Off

* Valid only if the system is wired in legacy mode. If system is wired in the 4-wire communicating mode, these functions are selected via the user menu in the CTK01AA T-STAT.

HEAT KIT SELECTION

MODEL	MBVB12BP1X00	MBVB16CP1X00	MBVB20DP1X00
HKTAN031	X	X	X
HKTAN051	X	X	X
HKTAD051	X	X	X
HKTAN061	X	X	X
HKTAN081	X	X	X
HKTAD081	X	X	X
HKTAN101	X	X	X
HKTAD101	X	X	X
HKTAD151	X	X	X
HKTAD201	---	---	X

Refer to the minimum airflow requirements for each of the heat kits.
--- Indicates Not Permitted

Our continuing commitment to quality products may mean a change in specifications without notice.
©2023 DAIKIN COMFORT TECHNOLOGIES MANUFACTURING, L.P. • Houston, Texas • Printed in the USA.