INDUCTION HARDWARE

THE ELECTRIC APPLIANCE COMPANY

User Care Guide

Drop-In Induction Cooktops

Models: ID-PRO-24 | ID-PRO-30 | ID-PRO-36

APPLIANCE SHOWROOM:
WWW.INDUCTIONHARDWARE.COM
12920 OLD VIRGINIA ROAD, SUITE 160 | RENO, NEVADA 89521, USA

CONTACT:
(775) 898-7562 | SUPPORT@INDUCTIONHARDWARE.COM

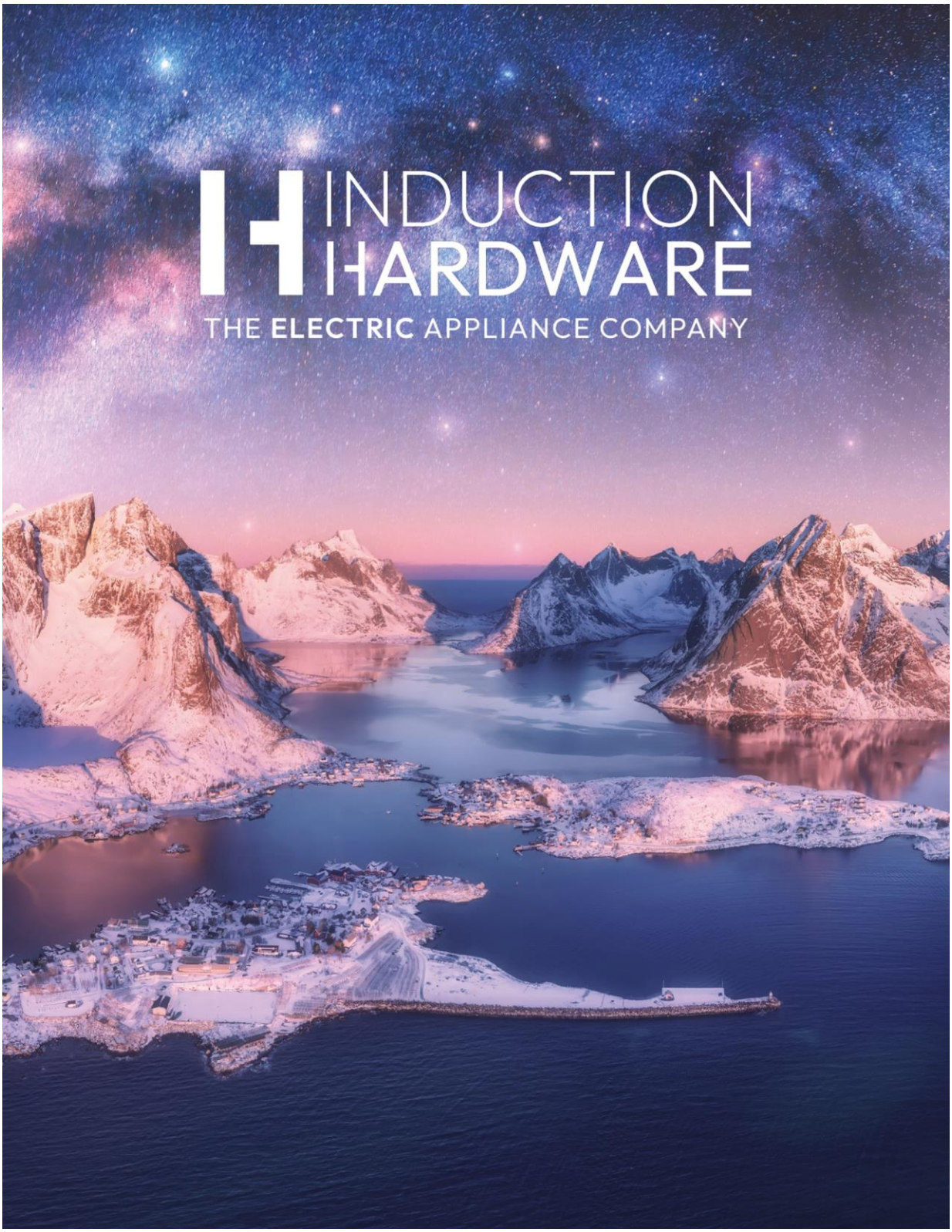
INDUCTION
HARDWARE
THE ELECTRIC APPLIANCE COMPANY

Table of Contents

Quick Start Guide 4 .....

Safety Instructions 5 .....
Control Panel 7 .....
Cooktop Use & Functions 9 .....
Cooking Guidelines 11 .....
Product Dimensions 13 .....

Installation Guide 14 .....

Cabinet Cutouts & Installation 14 .....
Making Electrical Connection 17 .....

Care & Cleaning 19 .....

Troubleshooting & Error Codes 20 .....

Technical Specifications 21 .....

Quick Start Guide

Induction is the new electric.

Induction cooking uses electromagnetic fields to directly heat pots and pans, making it faster, more energy-efficient, and more precise than traditional electric ceramic cooktops. Unlike ceramic cooktops, induction surfaces stay cooler to the touch and allow for instant temperature control.

Before First Use

Read this guide fully, paying special attention to the Safety Instructions. Remove any protective film from the cooktop surface.

Choosing the Right Cookware

Only use cookware with a base suitable for induction. To check compatibility, place a magnet against the bottom of the pan — if it sticks, the pan works with induction. Cast iron, carbon steel, and magnetic stainless steel all work well.

The following materials are NOT suitable for induction cooking:

- Pure stainless steel (non-magnetic)
- Aluminum or copper without a magnetic base
- Glass, wood, porcelain, ceramic, or earthenware

Minimum Cookware Diameters by Zone Size

Zone Diameter	Minimum Cookware Diameter
6.30"	4.72"
7.09"	5.51"
10.5"	9.0"

Always center your pan on the cooking zone. Lift pans rather than sliding them to avoid scratching the glass.

Safety Instructions

This is the safety alert symbol.

DANGER! — You can be killed or seriously injured if you do not immediately follow instructions.

WARNING! — You can be killed or seriously injured if you don't follow instructions.

CAUTION! — Hazards or unsafe practices could result in minor personal injury.

Always read and obey all safety messages.

To reduce the risk of fire, electrical shock, or injury when using this cooktop, follow all basic precautions including the following:

THIS PRODUCT IS INTENDED FOR HOUSEHOLD USE ONLY.

Proper Installation — Be sure your cooktop is properly installed and grounded by a qualified technician.

Servicing — Do not repair or replace any part unless specifically recommended in this manual. All other servicing should be performed by a qualified technician.

Apparel — Loose-fitting or hanging garments should never be worn while using the cooktop.

Flammable Materials — Do not store flammable materials near the cooktop or surface burners.

Utensil Handles — Turn handles inward so they do not extend over adjacent surface units, reducing the risk of burns and spillage.

Grease Fires — Do not use water on grease fires. Smother the fire or use a dry chemical or foam-type extinguisher.

Unattended Cooking — Never leave surface units unattended at high heat settings. Boil over causes smoking and greasy spillovers that may ignite.

Children — Children should not be left alone or unattended where the cooktop is in use. They should never be allowed to sit or stand on any part of the cooktop.

Hot Surfaces — Do not touch surface units or areas near units. Surfaces may be hot even though dark in color. Residual heat in the glass can cause burns.

Broken Cooktop — Do not cook on a broken cooktop. Cleaning solutions and spillovers may penetrate and create a risk of electric shock. Contact Induction Hardware immediately.

Room Heating — Never use the cooktop to warm or heat the room. If no cookware is detected, the cooktop will auto-shut off.

Metallic Objects — Do not place metallic objects (knives, forks, spoons, lids) on the cooktop surface — they can get hot.

Cleaning — Use caution when wiping spills on a hot cooking area to avoid steam burns. Some cleaners produce noxious fumes when applied to hot surfaces.

Steam Cleaning — Do not use a steam cleaner on the cooktop.

Cabinet Storage — Do not store items of interest to children in cabinets above the cooktop. Children climbing on the cooktop could be seriously injured.

Pan Size — Select utensils with flat bottoms large enough to cover the surface unit. Undersized utensils expose the heating element and may ignite clothing.

ELECTRICAL SHOCK HAZARD

Do not cook on a cracked cooktop — switch off at the main breaker box immediately and contact a qualified technician.

Switch the cooktop off at the main breaker box before cleaning or maintenance.

Failure to comply may result in electrical shock or death.

Control Panel

This manual covers the ID-PRO-24, ID-PRO-30, and ID-PRO-36 models. Locations and appearances of features may vary by model.

ID-PRO-24 Control Panel (6 Controls)

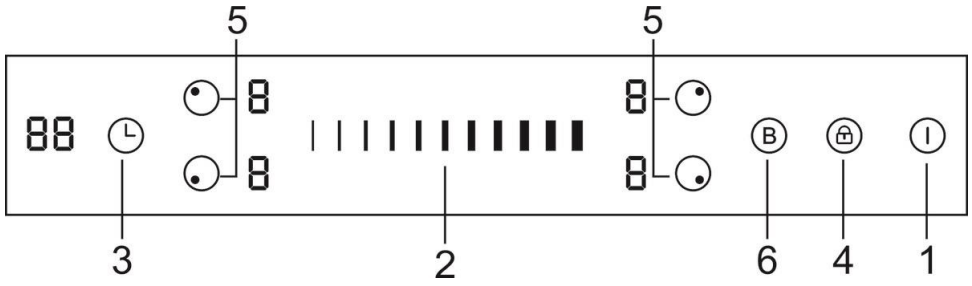

Control	Function
1. ON/OFF Switch	Powers the cooktop on or off.
2. Slider Control	Adjust heat output (levels 1–9) or navigate functions.
3. Timer	Set a countdown timer per zone or as a minute reminder (up to 99 min).
4. Child Lock	Locks all controls to prevent unintended use.
5. Zone Display / Select	Shows power level or status symbol; selects heating zone.
6. Boost Control	Activates maximum power on a supported zone (up to 5 min).

ID-PRO-30 & ID-PRO-36 Control Panel (8 Controls)

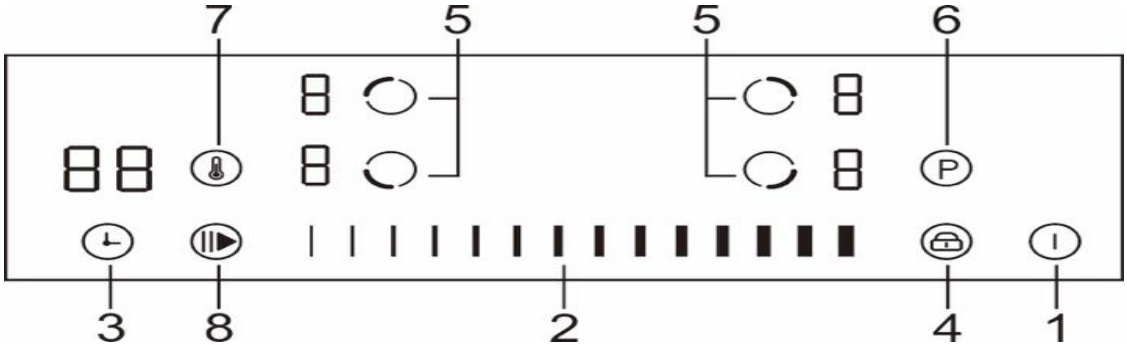

Control	Function
1. ON/OFF Switch	Powers the cooktop on or off.
2. Slider Control	Adjust heat output (levels 1–9) or navigate functions.
3. Timer	Set a countdown timer per zone or as a minute minder (up to 99 min).
4. Child Lock	Locks all controls to prevent unintended use.
5. Zone Display / Select	Shows power level or status symbol; selects heating zone.
6. Boost Control	Activates maximum power on a supported zone (up to 5 min).
7. Keep Warm	Maintains food at a low warm temperature. (ID-PRO-30/36 only)
8. Pause	Pauses all active zones simultaneously; press again to resume. (ID-PRO-30/36 only)

Display Symbols

Symbol	Meaning
—	Zone is activated but not in use (standby).
H	Surface is too hot to touch. Disappears when cooled to a safe temperature.
P	Boost function is active.
L	Child lock is engaged.
A	Auto Rapidheat function is active.
‖	Pause function is active — all zones paused. (ID-PRO-30/36 only)
|	Keep Warm function is active. (ID-PRO-30/36 only)
1–9	Power level indicator.

Cooktop Use & Functions

Starting to Cook

1. Touch the ON/OFF switch to power on. All indicators light up briefly, then the unit enters standby (all zones show "—").
2. Place an induction-compatible pan on the cooking zone. Ensure both the pan base and cooktop surface are clean and dry.
3. Touch the zone selection control for the zone you want — the indicator will flash.
4. Adjust the heat level using the slider control. If no heat setting is selected within 1 minute, the cooktop switches off automatically.
5. You may adjust the heat level at any time during cooking.

Finishing Cooking

1. Touch the zone selection control for the zone you want to turn off.
2. Slide the control to "0" to turn off the zone.
3. Touch the ON/OFF control to power off the entire cooktop.

Note: "H" will display if a zone is still hot after cooking. It disappears when the surface cools to a safe temperature.

Child Lock

To activate: touch and hold the child lock control until the display shows "Lo". All controls except ON/OFF are disabled.

To deactivate: with the cooktop on, touch and hold the child lock control for 3 seconds. The ON/OFF control always remains functional in an emergency.

Boost Function

Activates maximum power on a supported zone. Slide to "P" — display shows "P". Limited to 5 minutes; then the zone automatically drops to power level 9.

To cancel: slide back to "P" to switch to level 9, or slide to "0" to power off the zone.

Keep Warm Function (ID-PRO-30 / ID-PRO-36 only)

Select the desired zone and touch the Keep Warm control. Display shows "|". To cancel, slide the control to a different level or activate another function.

Pause Function (ID-PRO-30 / ID-PRO-36 only)

Touch Pause to pause all active zones (displays show "||"). Touch Pause again to resume. If not resumed within 30 minutes, the cooktop shuts off automatically.

Timer

The timer has two modes:

- Minute reminder: counts down and beeps when done, but does not turn any zone off.
- Cut-Off Timer: turns off one or more selected zones when the countdown reaches zero. Maximum: 99 minutes.

Auto Shut-Down

Power Level	Auto Shutdown Time
1–3	8 hours
4–6	4 hours
7–9	2 hours

Heat Settings Guide

Level	Suitable For
1–2	Delicate warming, melting chocolate or butter, gentle simmering
3–4	Reheating, rapid simmering, cooking rice
5–6	Pancakes, maintaining a steady simmer
7–8	Sauteing, cooking pasta
9 / P	Stir-frying, searing, boiling water, bringing soup to a boil

Cooking Guidelines

Induction cooking responds instantly to power changes, making it well-suited to techniques that require precise heat control. The tips below will help you get the most from your cooktop.

General Tips

- When food comes to a boil, reduce the power setting immediately. Using a lid retains heat and reduces cooking time.
- Minimize the amount of liquid or fat to reduce overall cooking times.
- Start on a high setting and reduce the power once the food has heated through.
- Take care when frying — oil and fat heat up very quickly, particularly when using Boost. At extremely high temperatures oil and fat can ignite spontaneously.

Simmering & Cooking Rice

Simmering occurs below boiling point, at around 85°C (185°F), when bubbles are just rising occasionally to the surface. It is the key to delicious soups and tender stews — flavors develop without overcooking the food. Egg-based and flour-thickened sauces should also be cooked below boiling point.

Some tasks, including cooking rice by the absorption method, may require a setting higher than the lowest setting to ensure the food cooks properly in the time recommended.

Searing Steak

To cook juicy, flavorsome steaks:

1. Stand the meat at room temperature for about 20 minutes before cooking.
2. Heat a heavy-based frying pan on a high setting.
3. Brush both sides of the steak lightly with oil. Add a small drizzle of oil to the hot pan, then lower the steak onto the surface.
4. Turn the steak only once during cooking. Exact times depend on thickness and desired doneness — approximately 2 to 8 minutes per side.
5. Press the steak to gauge doneness: the firmer it feels, the more well-done it is.
6. Rest the steak on a warm plate for a few minutes before serving to allow it to relax and become tender.

Stir-Frying

1. Choose a flat-based wok or a large frying pan compatible with induction.
2. Have all ingredients and equipment ready before starting — stir-frying is fast.

3. If cooking large quantities, work in several smaller batches.
4. Preheat the pan briefly on a high setting, then add two tablespoons of oil.
5. Cook any meats first; set aside and keep warm.
6. Stir-fry the vegetables. When hot but still crisp, reduce the power setting, return the meat to the pan, and add your sauce.
7. Stir gently to heat everything through and serve immediately.

Product Dimensions

Model	Length (L)	Width (W)	Height (H)
ID-PRO-24	23-5/8"	20-1/2"	2-5/16"
ID-PRO-30	30"	21"	2-5/16"
ID-PRO-36	36"	21"	2-5/16"

Built-In (Cutout) Dimensions

Model	Cutout A (Length)	Cutout B (Width)	Depth
ID-PRO-24	22-1/16"	19-5/16"	2-1/8"
ID-PRO-30	28-3/4"	19-5/16"	2-1/8"
ID-PRO-36	33-7/8"	19-5/16"	2-1/8"

Weights and dimensions are approximate. Induction Hardware reserves the right to change specifications without prior notice.

Installation Guide

Installation Made Clear.

Proper installation ensures your Induction Hardware appliance performs exactly as designed. For additional resources and installation videos, visit www.inductionhardware.com.

INSTALLATION WARNING

Minimum 30" clearance between the top of the cooking surface and the bottom of an unprotected wood or metal cabinet.

24" minimum when the cabinet bottom is protected with flame-retardant millboard and appropriate metal sheet.

Install a range hood projecting at least 5" beyond cabinet bottom if overhead storage is required.

Before Installing — Checklist

- Work surface is square, level, and clear of structural members.
- Work surface is heat-resistant (stone, ceramic tile, or impregnated wood). Minimum thickness: 1.18".
- A minimum clearance of 1.97" is preserved around the cutout.
- An approved isolating switch with 0.12" minimum air gap is installed in permanent wiring and accessible.
- If installed above an oven, the oven has a built-in cooling fan.
- If installed above a drawer or cabinet, a thermal protection barrier is installed below the cooktop.

Cabinet Cutout Dimensions

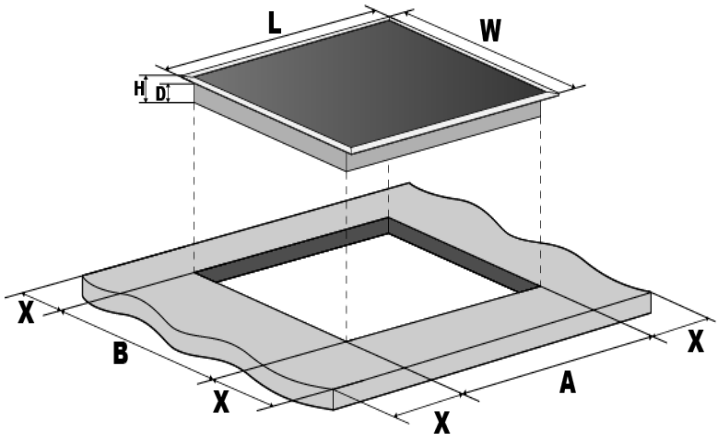

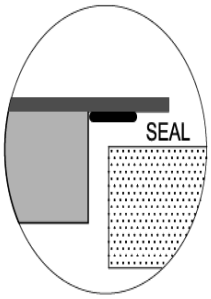

Model	Cutout A (L)	Cutout B (W)	Clearance Aroundt

ID-PRO-24	22-1/16"	19-5/16"	1.97" min
ID-PRO-30	28-3/4"	19-5/16"	1.97" min
ID-PRO-36	33-7/8"	19-5/16"	1.97" min

Clearance Requirements

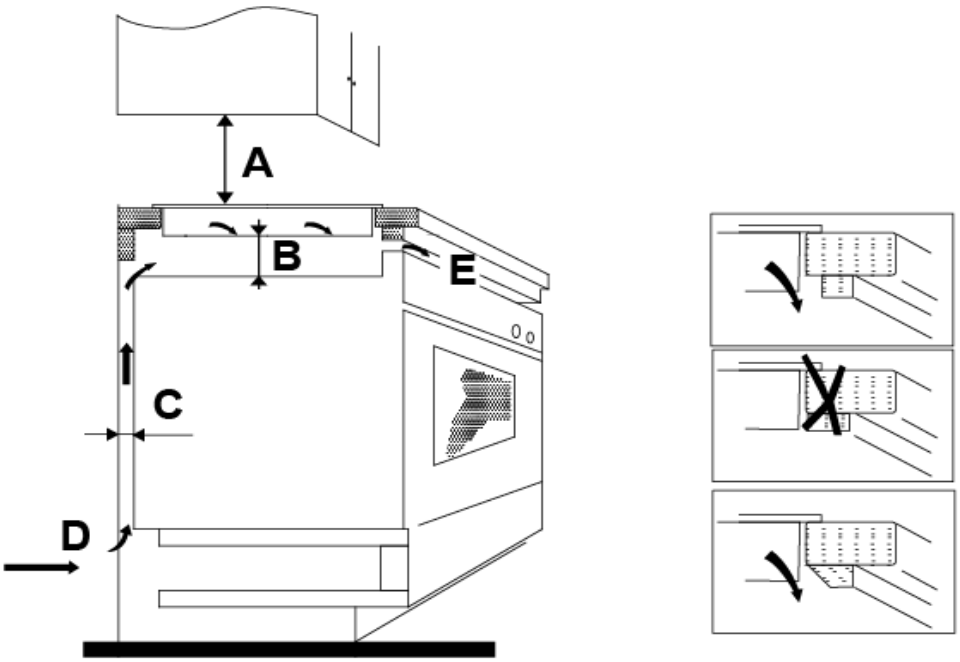

Mounting Brackets

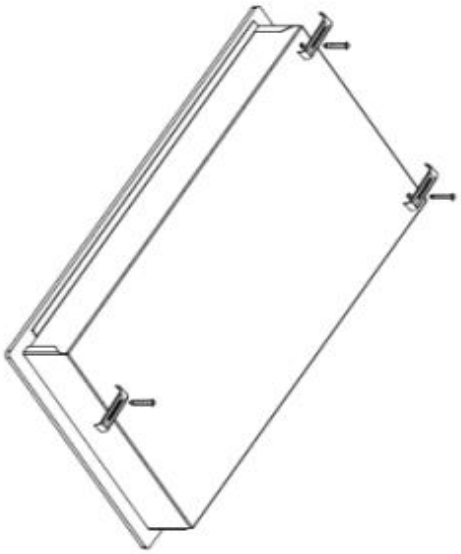

Secure the cooktop by screwing the four mounting brackets to the underside of the unit. Adjust bracket positions to match your work surface thickness.

Installing the Cooktop

1. Cut the work surface to the dimensions in the table above.
2. Place the cooktop on a stable, smooth surface (use the packaging) to prepare mounting brackets. Do not apply force to the controls.
3. Lower the cooktop into the cutout.
4. Secure the cooktop with the four mounting brackets. Adjust to match work surface thickness.
5. Verify adequate airflow — the air inlet and outlet must not be blocked.
6. Connect the electrical supply per the Making Electrical Connection section.

Note: The cooktop must not be mounted above cooling appliances, dishwashers, or rotary dryers.

People will want to mount oven single wall oven. Is this possible what is the minimun distance between top of oven and bottom of drop in?

Making Electrical Connection

WARNING: Electrical Shock Hazard

Disconnect power before servicing.

Use 8 gauge copper wire minimum.

Electrically ground the cooktop.

Failure to follow these instructions can result in death, fire, or electrical shock.

This cooktop is manufactured with a frame-connected green or bare ground wire. Connect the cooktop cable to the junction box through a UL-listed or CSA-approved conduit connector. Connect only to a 3-wire, 240-volt power supply.

4-Wire Cable from Power Supply to 3-Wire Cooktop

Use where local codes do not permit connecting the frame-ground conductor to the neutral (white) junction box wire.

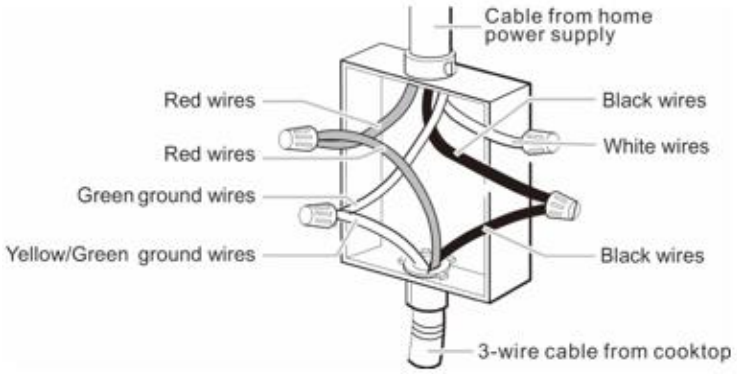

1. Disconnect power.
2. Remove junction box cover, if present.
3. Connect the flexible cable conduit from the cooktop to the junction box using a UL-listed or CSA-approved conduit connector.
4. Tighten screws on the conduit connector.
5. Connect the two black wires together using UL-listed wire connectors.
6. Connect the two red wires together using UL-listed wire connectors.
7. Connect the green or bare ground wire from the cooktop to the green or bare ground wire in the junction box.
8. Cap the white (neutral) wire with a UL-listed wire connector.

   NOTE: DO NOT connect the bare ground wire to the neutral (white) wire in the junction box.
9. Install junction box cover.

10. Reconnect power.

3-Wire Cable from Power Supply to 3-Wire Cooktop (Figure 2)

Use where local codes permit connecting the frame-ground conductor to the neutral (white) junction box wire.

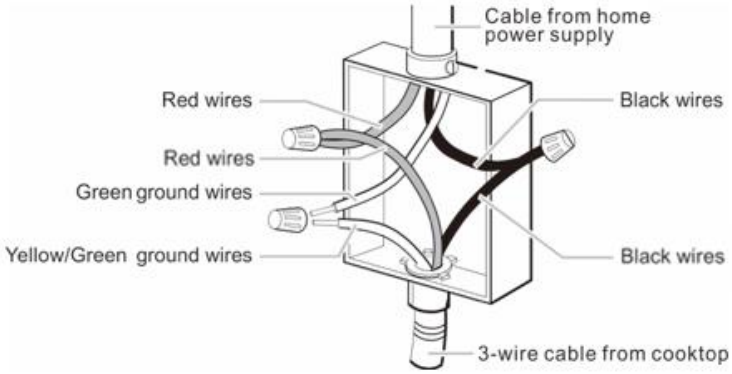

1. Disconnect power.
2. Remove junction box cover, if present.
3. Connect the flexible cable conduit from the cooktop to the junction box.
4. Tighten screws on the conduit connector.
5. Connect the two black wires together.
6. Connect the two red wires together.
7. Connect the green or bare cooktop cable wires to the white (neutral) wire in the junction box.
8. Install junction box cover.
9. Reconnect power.

Complete Installation

1. Verify all parts are installed — if an extra part remains, review steps for a missed step.
2. Collect all tools.
3. Dispose of or recycle all packaging materials.
4. Clean the cooktop with mild liquid household cleaner and warm water. Dry thoroughly with a soft cloth.
5. Reconnect power.

NOTE: If the cooktop does not work after restoring power, check that a circuit breaker has not tripped.

Care & Cleaning

IMPORTANT: Before cleaning, make sure all controls are turned off and the cooktop is completely cool. Always follow label instructions on cleaning products. Start with gentle soap, water, and a soft cloth unless otherwise noted.

Ceramic Glass Surface

IMPORTANT: Do not use steel wool, abrasive powder cleansers, chlorine bleach, rust remover, or ammonia on the glass surface.

Step 1 — Remove residue: Use a cooktop scraper while the surface is still warm (not hot). Hold the scraper at a 45 degree angle and apply firm pressure. Allow the cooktop to cool completely before the next step.

Step 2 — Apply cleaner: Apply a few dime-sized drops of cooktop cleaner. Rub with a nylon cleaning pad. Allow to dry to a white haze.

Step 3 — Polish: Buff with a clean, dry cloth or paper towel.

Boil overs and sugary spills should be removed immediately — if left to cool, they may permanently damage the glass surface. Use a razor blade scraper at a 30 degree angle to move the spill to a cooler area first.

Touch Controls

1. Switch the cooktop off.
2. Soak up any spill.
3. Wipe the control area with a clean, damp sponge or cloth.
4. Wipe completely dry with a paper towel.
5. Switch the cooktop back on.

Note: The cooktop may beep and switch off if liquid contacts the controls. Ensure the area is dry before powering back on.

Troubleshooting & Error Codes

Common Issues

Problem	Possible Cause	Solution
Cooktop will not turn on	No power supply	Check power connection and circuit breaker.
Touch controls unresponsive	Child lock is engaged	Hold child lock key for 3 seconds to unlock.
Controls difficult to operate	Water film over controls or using fingertip	Dry control area; use the ball of your finger.
Glass surface scratching	Rough-edged cookware or abrasive cleaners	Use cookware with flat, smooth bases. See Care & Cleaning.
Crackling or clicking from pan	Layers of different metals in cookware	Normal — not a fault.
Low humming on high heat	Normal induction cooking operation	Normal — decreases when heat setting is reduced.
Fan noise	Cooling fan preventing electronics overheating	Normal. Do not switch power off at wall while fan runs.
Pan does not heat	Pan not induction-compatible or not centred	Use induction-compatible cookware; centre the pan.
Zone shuts off with error code	Technical fault	Note the code, switch off at wall, contact a technician.

Error Codes

Code	Cause	Action
E2/E3	Abnormal supply voltage	Check power supply is normal, then power back on.
E4/E5	Temperature sensor failure	Contact Induction Hardware support.
E7/E8	IGBT temperature sensor failure	Contact Induction Hardware support.
E6/E9	Poor heat radiation / overheating	Allow cooktop to cool, then restart.

Do we have a code for improper pot?

Do not attempt to disassemble the unit yourself. Contact support@inductionhardware.com for service.

Technical Specifications

ID-PRO-24

Specification	Value
Cooking Zones	4 zones
Supply Voltage	240V~ 60Hz
Installed Electric Power	7,200W
Product Dimensions (L x W x H)	23-5/8" x 20-1/2" x 2-5/16"
Built-In Dimensions (A x B)	22-1/16" x 19-5/16"

Zone Power Output — ID-PRO-24

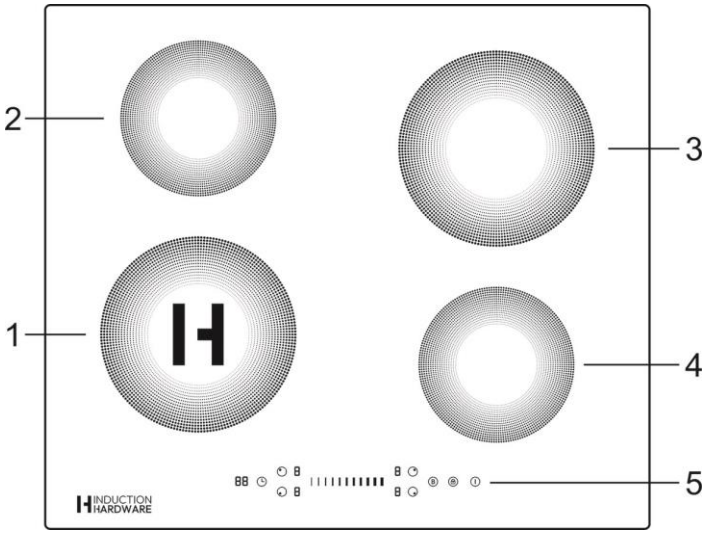

Zone	Standard Power	Boost Power
Zone 1	2,300W	3,000W
Zone 2	1,200W	1,500W
Zone 3	1,800W	2,100W
Zone 4	1,200W	1,500W

ID-PRO-30

Specification	Value
Cooking Zones	4 zones
Supply Voltage	240V~ 60Hz
Installed Electric Power	7,200W
Product Dimensions (L x W x H)	30" x 21" x 2-5/16"
Built-In Dimensions (A x B)	28-3/4" x 19-5/16"

Zone Power Output — ID-PRO-30

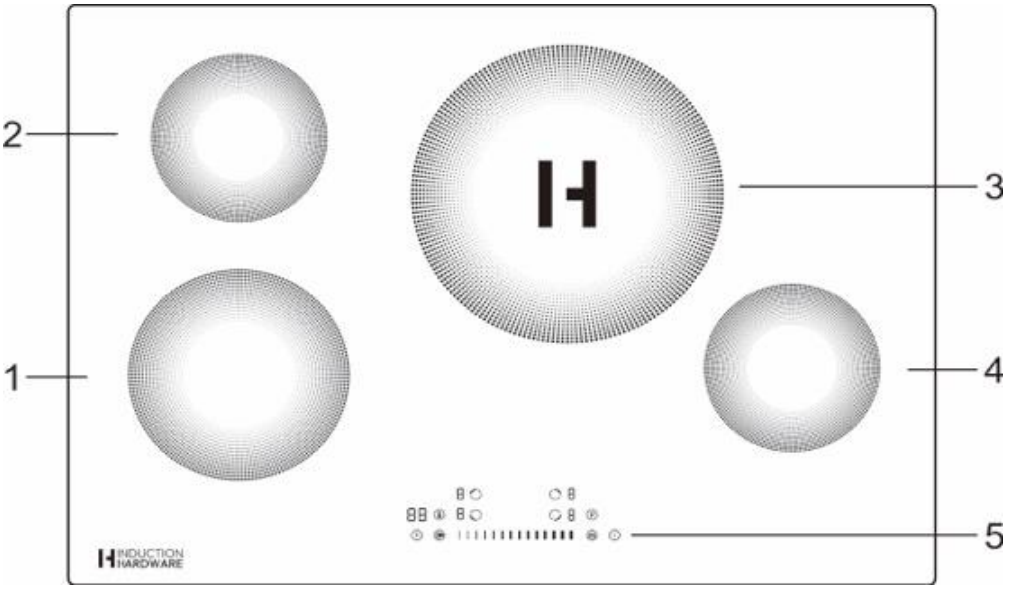

Zone	Standard Power	Boost Power
Zone 1	1,800W	2,100W
Zone 2	1,200W	1,500W
Zone 3	2,300W	3,700W
Zone 4	1,200W	1,500W

ID-PRO-36

Specification	Value
Cooking Zones	5 zones
Supply Voltage	240V~ 60Hz
Installed Electric Power	9,300W
Product Dimensions (L x W x H)	36" x 21" x 2-5/16"
Built-In Dimensions (A x B)	33-7/8" x 19-5/16"

Zone Power Output — ID-PRO-36

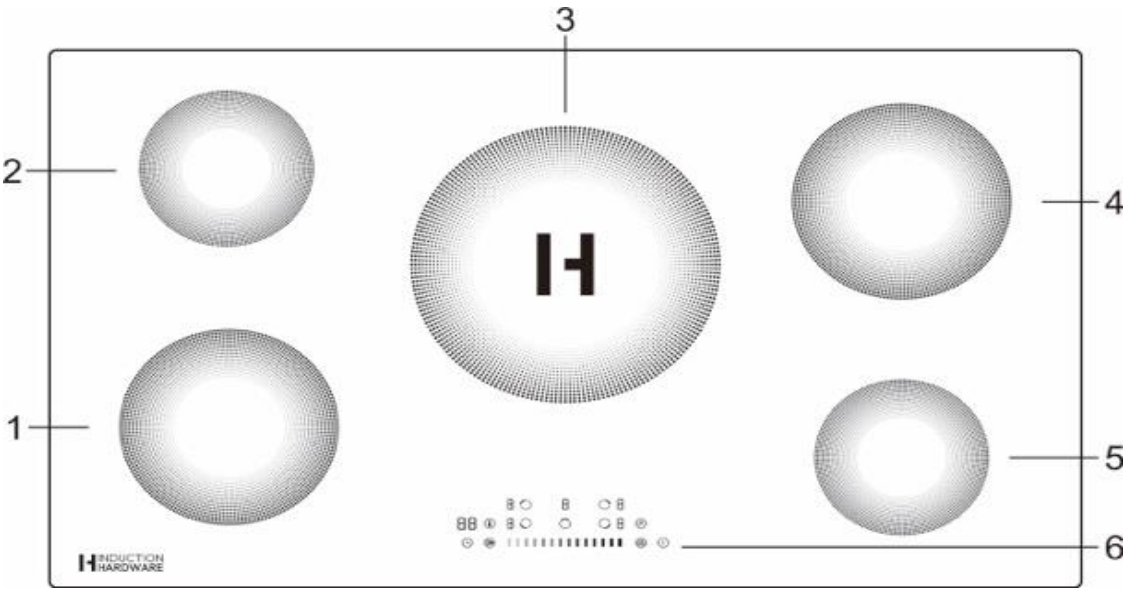

Zone	Standard Power	Boost Power
Zone 1	1,800W	2,100W
Zone 2	1,200W	1,500W
Zone 3	2,300W	3,700W
Zone 4	1,800W	2,100W
Zone 5	1,200W	1,500W

DISPOSAL: Do not dispose of this product as unsorted municipal waste. Take it to a collection point for recycling of electrical and electronic goods.


Thank you for being part of the Induction Hardware community.
If you ever need support, our team is always here to help.
www.INDUCTIONHARDWARE.com