EPSON
EXCEED YOUR VISION

ST-4000 User's Guide

Contents

ST-4000 User's Guide **13**
Product Basics **14**
Using the Control Panel 14
Control Panel Buttons and Lights 15
Status Icon Information 15
Entering Characters on the LCD Screen 17
Selecting the Date and Time 17
Changing LCD Screen Language 19
Adjusting Control Panel Sounds 20
Adjusting the Screen Brightness 21
Turning Off the Operation Time Out Setting 22
Product Parts Locations 23
Product Parts - Front 24
Product Parts - Inside 26
Product Parts - Back 28
Using Power Saving Settings 28
Changing the Sleep Timer Settings 28
Changing the Power Off Timer Settings 30
Epson Connect Solutions for Smartphones, Tablets, and More 31
Setting Up Epson Connect Services 31
Using Epson Email Print 33
Using the Epson iPrint Mobile App 33
Using Epson Remote Print 34
Using Epson Scan to Cloud 34
Using AirPrint 35
Using Google Cloud Print 36
Android Printing Using the Epson Print Enabler 37
Using Fire OS Printing 37
Using Windows 10 Mobile Printing 38
Using Epson Print and Scan App with Windows Tablets 38

Wi-Fi or Wired Networking **40**
Network Security Recommendations 40
Wi-Fi Infrastructure Mode Setup 41
Selecting Wireless Network Settings from the Control Panel 42
Wi-Fi Direct Mode Setup 44
Enabling Wi-Fi Direct Mode 44
Wi-Fi Protected Setup (WPS) 46
Using WPS to Connect to a Network 46
Printing a Network Status Sheet 47
Printing a Network Connection Report 48
Network Connection Report Codes and Messages 50
Changing or Updating Network Connections 55
Accessing the Web Config Utility 55
Changing a USB Connection to a Wi-Fi Connection 56
Changing a Wi-Fi Connection to a Wired Network Connection 56
Connecting to a New Wi-Fi Router 57
Disabling Wi-Fi Features 57
Loading Paper **59**
Loading Paper in the Cassette 59
Paper Loading Capacity 64
Double-sided Printing Capacity 65
Compatible Epson Papers 66
Borderless Paper Type Compatibility 67
Paper or Media Type Settings - Printing Software 68
Selecting the Paper Settings - Control Panel 69
Paper Type Settings - Control Panel 69
Selecting the Default Paper Source Settings 70
Paper Source Settings Options 71
Selecting the Universal Print Settings 72
Universal Print Settings Options 73
Placing Originals on the Product **74**
Placing Originals on the Scanner Glass 74
Placing Originals in the Automatic Document Feeder 75

ADF Original Document Specifications 78
Copying 79
Copying Documents or Photos 79
Copying Options 80
Printing from a Computer 82
Printing with Windows 82
Selecting Basic Print Settings - Windows 83
Print Quality Options - Windows 85
Multi-Page Printing Options - Windows 85
Selecting Double-sided Printing Settings - Windows 86
Double-sided Printing Options - Windows 88
Print Density Adjustments - Windows 89
Selecting Additional Layout and Print Options - Windows 90
Custom Color Correction Options - Windows 92
Image Options and Additional Settings - Windows 93
Header/Footer Settings - Windows 94
Selecting a Printing Preset - Windows 95
Selecting Extended Settings - Windows 96
Extended Settings - Windows 97
Printing Your Document - Windows 98
Locking Printer Settings - Windows 99
Locked Setting Options 101
Selecting Default Print Settings - Windows 102
Changing the Language of the Printer Software Screens 103
Changing Automatic Update Options 104
Printing with the Built-in Epson Driver - Windows 10 S 105
Selecting Print Settings - Windows 10 S 105
Printing on a Mac 109
Selecting Basic Print Settings - Mac 110
Print Quality Options - Mac 113
Print Options - Mac 113
Selecting Page Setup Settings - Mac 114
Selecting Print Layout Options - Mac 115

Selecting Double-sided Printing Settings - Mac ... 116
Double-sided Printing Options and Adjustments - Mac ... 117
Managing Color - Mac ... 118
Color Matching and Color Options - Mac ... 119
Selecting Printing Preferences - Mac ... 120
Printing Preferences - Mac ... 121
Printing Your Document or Photo - Mac ... 121
Checking Print Status - Mac ... 123
Printing From a Chromebook ... 123
Cancelling Printing Using the Product ... 124
Scanning ... 125
Starting a Scan ... 125
Starting a Scan Using the Product Control Panel ... 125
Scanning to a Connected Computer ... 126
Control Panel Scanning Options ... 129
Changing Default Scan Job Settings ... 130
Setting Up a WSD Port (Windows 7/Windows Vista) ... 131
Starting a Scan Using the Epson Scan 2 Icon ... 131
Starting a Scan from a Scanning Program ... 133
Starting a Scan from a Smart Device ... 135
Scanning in Epson Scan 2 ... 136
Additional Scanning Settings - Main Settings Tab ... 139
Additional Scanning Settings - Advanced Settings Tab ... 139
Saving Scanned Documents as a Searchable PDF Using Epson Scan 2 ... 140
Image Format Options ... 141
Scan Resolution Guidelines ... 142
Faxing ... 144
Connecting a Telephone or Answering Machine ... 144
Setting Up Fax Features ... 147
Setting Up Basic Fax Features ... 147
Using the Fax Setup Wizard ... 147
Selecting the Line Type ... 149
Setting the Number of Rings to Answer ... 150

Selecting Advanced Fax Settings 152
Print Settings - Fax 153
Basic Settings - Fax 154
Security Settings - Fax 156
Setting Up the Fax Utility - Windows 157
Setting Up Fax Features Using the Fax Utility - Mac 159
Setting Up Contacts and Contact Groups 160
Setting Up Contacts Using the Product Control Panel 161
Creating a Contact 161
Editing or Deleting a Contact 163
Creating a Contact Group 164
Editing or Deleting a Contact Group 166
Importing Contacts Using the Fax Utility - Windows 167
Setting Up Speed/Group Dial Lists Using the Fax Utility - Mac 170
Sending Faxes 172
Sending Faxes from the Product Control Panel 172
Sending a Fax Using the Keypad, Contact List, or History 173
Fax Sending Options 174
Sending a Fax at a Specified Time 176
Sending Faxes Using the Fax Utility - Windows 177
Sending Faxes Using the Fax Utility - Mac 180
Dialing Fax Numbers from a Connected Telephone 183
Receiving Faxes 184
Fax Reception 184
Receiving Faxes Automatically 185
Receiving Faxes Manually 185
Receiving a Fax by Polling 186
Viewing a Fax on the LCD Screen (Using the Inbox) 186
Selecting Received Fax Options Using the Fax Utility - Windows 188
Checking Fax Status 191
Printing Fax Reports 192
Fax Report Options 192

Refilling Ink **194**
Ink Safety Precautions 194
Check Ink Levels 196
Checking Ink Levels on Your Product 196
Checking Ink Levels - Windows 197
Checking Ink Levels - Mac 198
Disabling Special Offers with Windows 200
Purchase Epson Ink and Maintenance Box 201
Ink Bottle and Maintenance Box Part Numbers 201
Refilling the Ink Tanks 201
Maintenance Box Replacement 206
Adjusting Print Quality **208**
Print Head Maintenance 208
Print Head Nozzle Check 208
Checking the Nozzles Using the Product Control Panel 209
Checking the Nozzles Using a Computer Utility 211
Print Head Cleaning 212
Cleaning the Print Head Using the Product Control Panel 213
Cleaning the Print Head Using a Computer Utility 215
Power Cleaning 217
Power Cleaning Using the Product Control Panel 217
Power Cleaning Using a Computer Utility 218
Print Head Alignment 220
Aligning the Print Head Using the Product Control Panel 220
Cleaning the Paper Guide 222
Cleaning the Print Head Path 223
Checking the Number of Sheets 225
Checking the Sheet Counter - Windows 225
Checking the Sheet Counter - Mac 226
Cleaning and Transporting Your Product **228**
Cleaning Your Product 228
Cleaning the Paper Rollers 230
Transporting Your Product 233

Solving Problems **237**
Checking for Software Updates 237
Product Status Messages 238
Message Appears Prompting You to Reset Ink Levels 240
Running a Product Check 241
Resetting Control Panel Defaults 243
Solving Setup Problems 243
Noise After Filling the Ink 244
Software Installation Problems 244
Control Panel Setup Problems 245
Solving Network Problems 245
Product Cannot Connect to a Wireless Router or Access Point 245
Network Software Cannot Find Product on a Network 247
Product Does Not Appear in Mac Printer Window 248
Wireless Network Connection is Unstable on a Mac 249
Cannot Print Over a Network 249
Cannot Scan Over a Network 250
Solving Copying Problems 251
Product Makes Noise, But Nothing Copies 251
Product Makes Noise When It Sits for a While 252
Solving Paper Problems 252
Paper Feeding Problems 252
Paper Jams Inside the Product 253
Paper Ejection Problems 253
Solving Problems Printing from a Computer 253
Nothing Prints 254
Product Icon Does Not Appear in Windows Taskbar 254
Printing is Slow 255
Solving Page Layout and Content Problems 256
Inverted Image 257
Too Many Copies Print 257
Blank Pages Print 257
Incorrect Margins on Printout 258

Border Appears on Borderless Prints ... 258
Incorrect Characters Print ... 259
Incorrect Image Size or Position ... 260
Slanted Printout ... 260
Solving Print Quality Problems ... 261
White or Dark Lines in Printout ... 261
Blurry or Smeared Printout ... 262
Faint Printout or Printout Has Gaps ... 264
Grainy Printout ... 265
Incorrect Colors ... 266
Solving Scanning Problems ... 267
Scanning Software Does Not Operate Correctly ... 267
Cannot Start Epson Scan 2 ... 268
Solving Scanned Image Quality Problems ... 268
Image Consists of a Few Dots Only ... 269
Line of Dots Appears in All Scanned Images ... 269
Straight Lines in an Image Appear Crooked ... 269
Image is Distorted or Blurry ... 269
Image Colors are Patchy at the Edges ... 270
Image is Too Dark ... 270
Back of Original Image Appears in Scanned Image ... 270
Ripple Patterns Appear in an Image ... 271
Scanned Image Colors Do Not Match Original Colors ... 271
Scanned Image Edges are Cropped ... 272
Solving Faxing Problems ... 272
Cannot Send or Receive Faxes ... 272
Cannot Receive Faxes with a Telephone Connected to Your Product ... 274
Fax Memory Full Error Appears ... 274
Sent Fax Quality is Poor ... 275
Sent Fax is Received in an Incorrect Size ... 275
Received Fax Quality is Poor ... 276
Received Fax is Not Printed ... 276
Uninstall Your Product Software ... 276

Uninstalling Product Software - Windows ... 276
Uninstalling Product Software - Mac ... 278
Where to Get Help ... 278
Technical Specifications ... 280
Windows System Requirements ... 280
Mac System Requirements ... 281
Paper Specifications ... 281
Printable Area Specifications ... 283
Scanning Specifications ... 284
Automatic Document Feeder (ADF) Specifications ... 285
Fax Specifications ... 285
Ink Specifications ... 286
Dimension Specifications ... 287
Electrical Specifications ... 287
Environmental Specifications ... 288
Interface Specifications ... 288
Network Interface Specifications ... 288
Safety and Approvals Specifications ... 289
Notices ... 291
Important Safety Instructions ... 291
General Product Safety Instructions ... 291
Wireless Connection Safety Instructions ... 293
LCD Screen Safety Instructions ... 293
Telephone Equipment Safety Instructions ... 294
FCC Compliance Statement ... 294
Binding Arbitration and Class Waiver ... 297
Trademarks ... 300
Copyright Notice ... 300
libTIFF Software Acknowledgment ... 301
A Note Concerning Responsible Use of Copyrighted Materials ... 302
Default Delay Times for Power Management for Epson Products ... 302
Copyright Attribution ... 302

ST-4000 User's Guide

Welcome to the ST-4000 *User's Guide*.

For a printable PDF copy of this guide, click here.

Product Basics

See these sections to learn about the basic features of your product.

Using the Control Panel
Product Parts Locations
Using Power Saving Settings
Epson Connect Solutions for Smartphones, Tablets, and More
Using AirPrint
Using Google Cloud Print
Android Printing Using the Epson Print Enabler
Using Fire OS Printing
Using Windows 10 Mobile Printing
Using Epson Print and Scan App with Windows Tablets

Using the Control Panel

See these sections to learn about the control panel and select control panel settings.

Control Panel Buttons and Lights
Entering Characters on the LCD Screen
Selecting the Date and Time
Changing LCD Screen Language
Adjusting Control Panel Sounds
Adjusting the Screen Brightness
Turning Off the Operation Time Out Setting

Parent topic: Product Basics

Control Panel Buttons and Lights

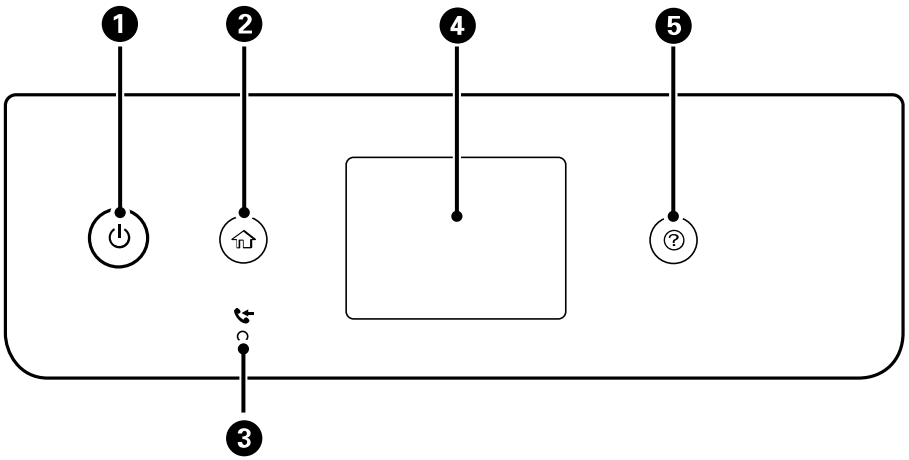

1 power button and light
2 home button
3 received fax light
4 LCD screen
5 help button

Status Icon Information

Parent topic: Using the Control Panel

Status Icon Information

Your product displays status icons on the LCD screen for certain product status conditions. Select the icon to view or change the current network settings.

Icons	Description
	Displays additional information or instructions, such as loading paper or placing a document.
	Displays the Supply Status screen.

Icons	Description
	Quiet Mode is enabled. Noise is reduced during printing, but the print speed may be reduced. Press this icon to change the settings.
	Quiet Mode is disabled. Press this icon to change the settings.
	Displays the Fax Data Information screen.
	There is a problem with the indicated setting. Press the icon to resolve the problem.
	No Ethernet connection.
	An Ethernet connection is established.
	No Wi-Fi connection.
	A Wi-Fi network error has occurred or the product is searching for a connection.
	A Wi-Fi connection is established. The number of bars indicates the connection's signal strength.
	No Wi-Fi Direct connection.
	A Wi-Fi Direct connection is established.

Parent topic: Control Panel Buttons and Lights

Entering Characters on the LCD Screen

Follow these guidelines to enter characters for passwords and other settings.

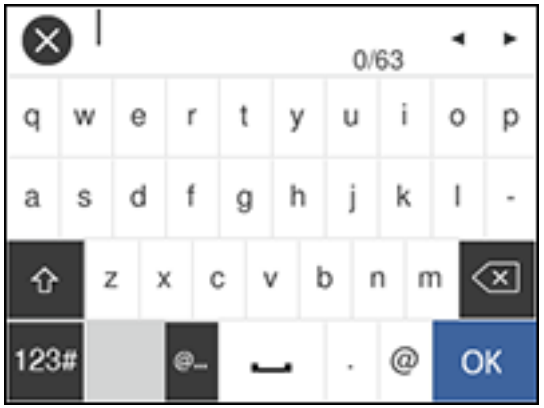

- To move the cursor, select the left or right arrows.
- To change the case of letters, select ⇧.
- To delete the previous character, select ⌫.
- To enter numbers or symbols, select **123#**.
- To enter a commonly used domain name, select **@...**.
- To enter a space, select ␣.

Parent topic: Using the Control Panel

Selecting the Date and Time

Before faxing, select the current date, time, and daylight saving phase in your area, and choose your preferred date and time format.

1. Press the ⌂ home button, if necessary.
2. Select **Settings**.

3. Select **General Settings**.

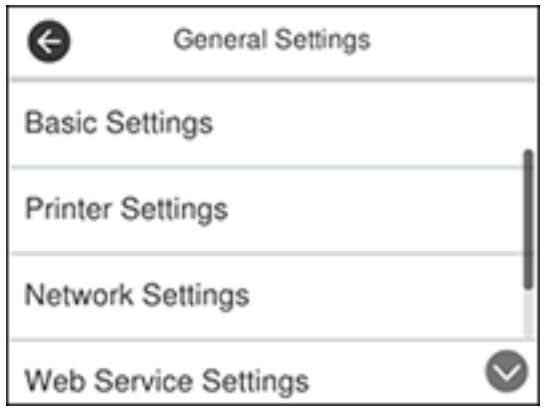

4. Select **Basic Settings**.

5. Select **Date/Time Settings**.

You see a screen like this:

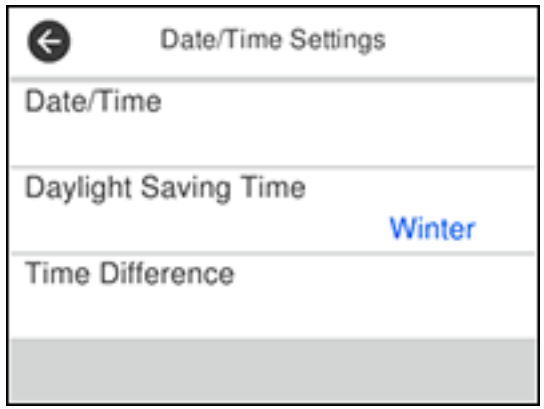

6. Select **Daylight Saving Time**.
7. Select the setting that applies to your area:
   - **Winter**: it is winter or your region does not use Daylight Saving Time (DST)
   - **Summer**: it is spring or summer and your region uses Daylight Saving Time (DST)

   Note: If your region uses Daylight Saving Time (DST), you must change this setting to match the season. When you change from **Winter** to **Summer**, your product automatically sets its clock ahead one hour. When you change from **Summer** to **Winter**, it sets its clock back one hour.

8. Select **Date/Time**.
9. Select the date format you want to use.
10. Use the displayed keypad to enter the current date.
11. Select the time format you want to use.
12. Use the displayed keypad to enter the current time.

Parent topic: Using the Control Panel

Changing LCD Screen Language

You can change the language used on the LCD screen.

1. Press the ⌂ home button, if necessary.

2. Select **Settings**.
3. Select **General Settings**.

   You see a screen like this:

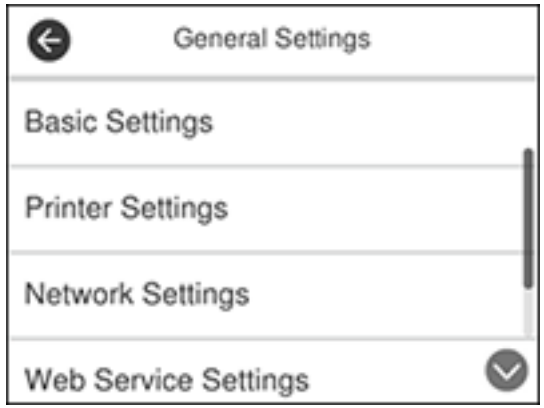

4. Select **Basic Settings**.
5. Scroll down and select **Language**.
6. Select a language.

Parent topic: Using the Control Panel

Adjusting Control Panel Sounds

You can adjust the sound level heard when you press buttons on the control panel.

1. Press the ⌂ home button, if necessary.
2. Select **Settings**.
3. Select **General Settings**.

You see a screen like this:

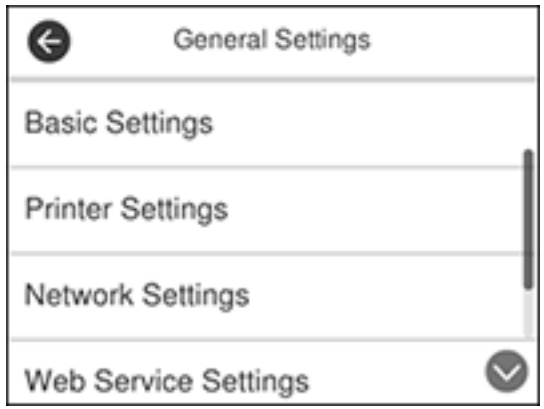

4. Select **Basic Settings**.
5. Select **Sound**.
6. Select **Normal Mode** or **Quiet Mode**.

   Note: Press the icon on the home screen to switch between **Normal Mode** and **Quiet Mode**.

7. Select **Button Press**.
8. Press the **+** or **–** buttons to adjust the volume.
9. Select **OK** to exit.

Parent topic: Using the Control Panel

Adjusting the Screen Brightness

You can adjust the brightness of the LCD screen.

1. Press the home button, if necessary.
2. Select **Settings**.
3. Select **General Settings**.

You see a screen like this:

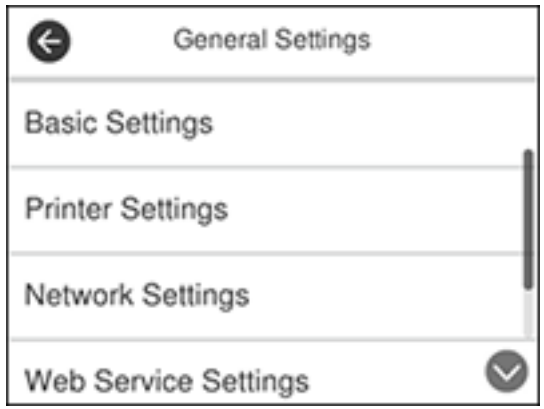

4. Select **Basic Settings**.
5. Select **LCD Brightness**.
6. Press the **–** or **+** icons to decrease or increase the brightness.
7. Select **OK** to exit.

Parent topic: Using the Control Panel

Turning Off the Operation Time Out Setting

The Operation Time Out setting causes the LCD screen to return to the Home screen after a few minutes of inactivity. This feature is enabled by default, but you can turn it off.

1. Press the ⌂ home button, if necessary.
2. Select **Settings**.
3. Select **General Settings**.

You see a screen like this:

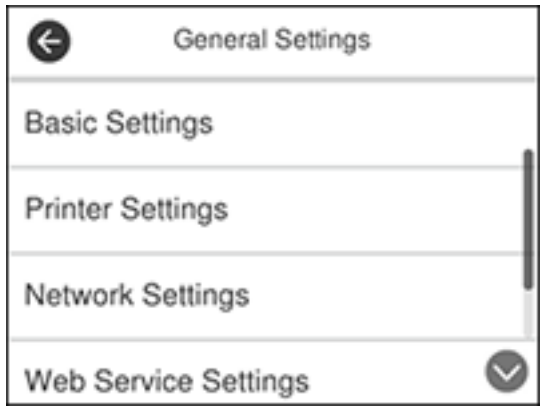

4. Select **Basic Settings**.
5. Scroll down and set **Operation Time Out** to **Off**.

Parent topic: Using the Control Panel

Product Parts Locations

See these sections to identify the parts on your product.

Product Parts - Front
Product Parts - Inside
Product Parts - Back

Parent topic: Product Basics

Product Parts - Front

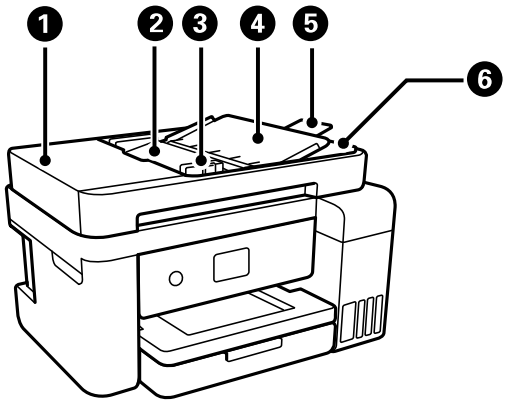

1 Automatic Document Feeder (ADF) cover
2 ADF input tray
3 ADF edge guides
4 ADF document support
5 ADF output tray extension

6 ADF output tray

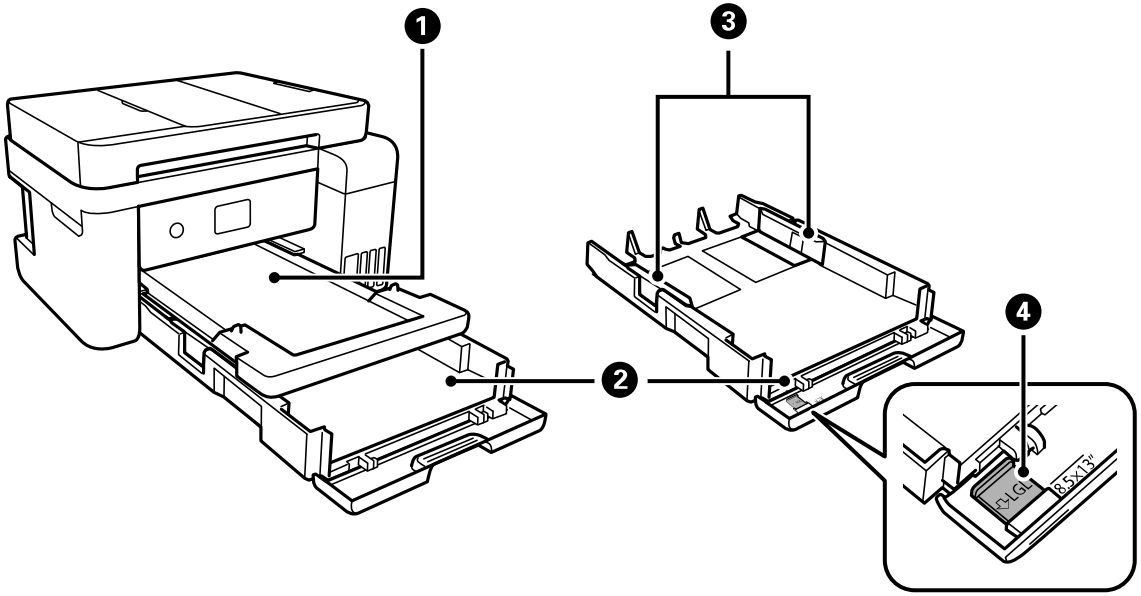

1 Output tray
2 Paper cassette
3 Paper cassette edge guides
4 Legal-size paper guide

Parent topic: Product Parts Locations

Product Parts - Inside

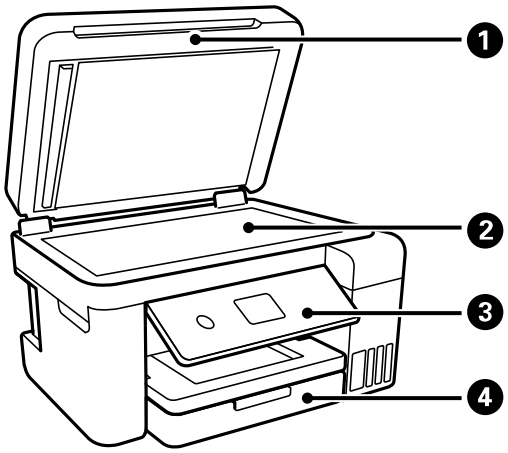

1 Document cover

2 Scanner glass

3 Control panel

4 Front cover

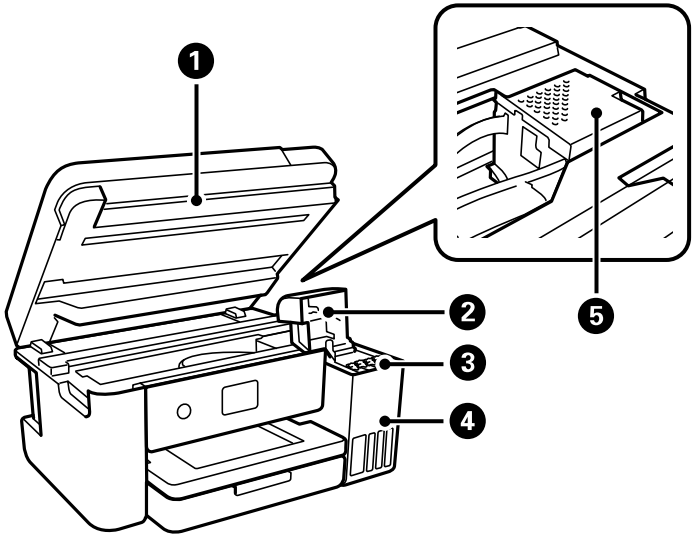

1 Scanner unit
2 Ink tank cover
3 Ink tanks
4 Ink tank unit
5 Print head

Parent topic: Product Parts Locations

Product Parts - Back

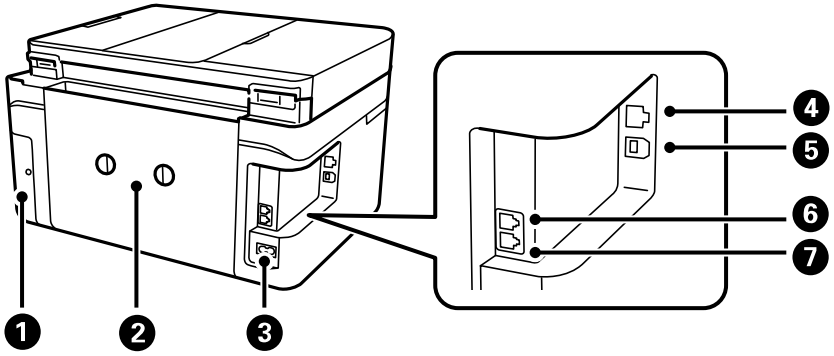

1 Maintenance box cover
2 Rear cover (duplexer)
3 AC inlet
4 **LAN** port
5 **USB** port
6 **EXT** port
7 **LINE** port

Parent topic: Product Parts Locations

Using Power Saving Settings

Your product enters sleep mode automatically and turns off the LCD screen if it is not used for a period of time. You can make the time period shorter and select other options to save energy and resources.

Changing the Sleep Timer Settings
Changing the Power Off Timer Settings

Parent topic: Product Basics

Changing the Sleep Timer Settings

You can adjust the time period before your product enters sleep mode and turns off the LCD screen.

1. Press the home button, if necessary.
2. Select **Settings**.
3. Select **General Settings**.

   You see a screen like this:

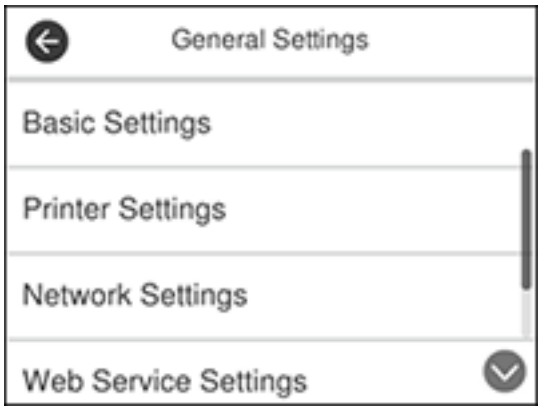

4. Select **Basic Settings**.
5. Select **Sleep Timer**.

   You see a screen like this:

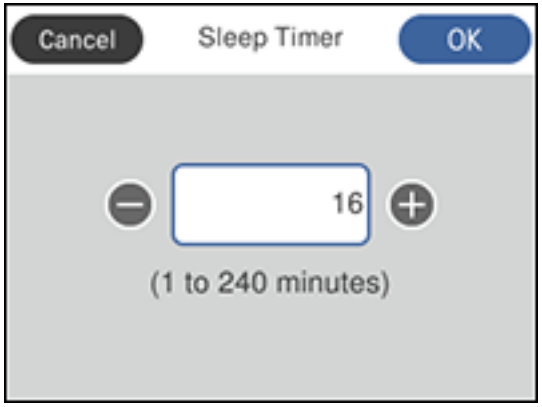

6. Do one of the following:
   - Press the **–** or **+** icon to decrease or increase the number of minutes.
   - Press the number of minutes on the LCD screen, select the number of minutes from the on-screen keypad, and select **OK**.
7. Select **OK**.

Parent topic: Using Power Saving Settings

Changing the Power Off Timer Settings

You can have the product turn off automatically if it is not used for a specified period of time.

1. Press the ⌂ home button, if necessary.
2. Select **Settings**.
3. Select **General Settings**.

   You see a screen like this:

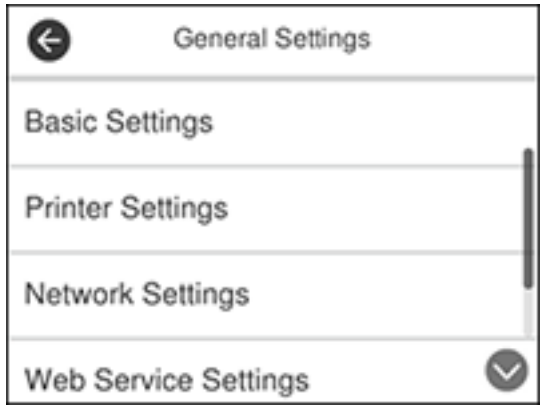

4. Select **Basic Settings**.
5. Select **Power Off Timer**, and select a time period between **30minutes** and **12h** (12 hours).

Parent topic: Using Power Saving Settings

Epson Connect Solutions for Smartphones, Tablets, and More

Use your smartphone, tablet, or computer to print and scan documents, photos, emails, and web pages from your home, office, or even across the globe.

Note: If you are using your Epson product with the Windows 10 S operating system, you cannot use the software described in this section. You also cannot download and install any Epson product software from the Epson website for use with Windows 10 S; you must obtain software only from the Windows Store.

Print from anywhere with these Epson Connect solutions:

- Epson Email Print
- Epson iPrint Mobile App
- Epson Remote Print

Scan and send a file as an email or upload it to an online service directly from your Epson product with Epson Scan to Cloud or the Epson iPrint Mobile App.

Setting Up Epson Connect Services
Using Epson Email Print
Using the Epson iPrint Mobile App
Using Epson Remote Print
Using Epson Scan to Cloud

Parent topic: Product Basics

Related tasks
Using AirPrint
Using Google Cloud Print
Android Printing Using the Epson Print Enabler
Using Fire OS Printing
Using Windows 10 Mobile Printing
Using Epson Print and Scan App with Windows Tablets

Setting Up Epson Connect Services

If you did not activate your product's email address for use with Epson Connect when you set up your product, you can activate it using the product control panel.

1. Press the ⌂ home button, if necessary.

2. Select **Settings**.
3. Select **General Settings**.

   You see a screen like this:

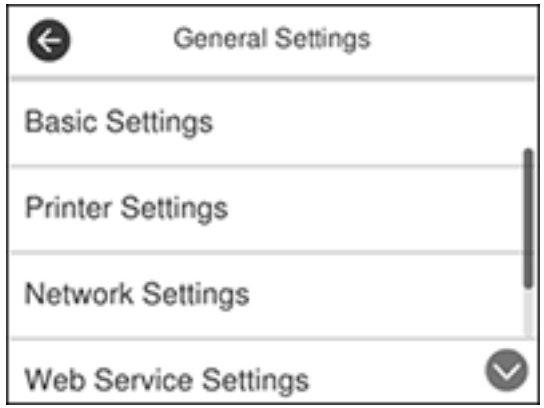

4. Select **Web Service Settings**.
5. Select **Epson Connect Services**.

   You see a screen like this:

6. Select **Register**.

7. Follow the instructions on the screen to activate your product's email address.

Parent topic: Epson Connect Solutions for Smartphones, Tablets, and More

Related topics

Wi-Fi or Wired Networking

Using Epson Email Print

With Epson Email Print, you can print from any device that can send email, such as your smartphone, tablet, or laptop. Just activate your product's unique email address. When you want to print, attach a PDF, Microsoft Office document, or photo to an email and send it to your product. Both the email and the attachments will print automatically.

1. Connect your product to your network. See the link below.
2. If you did not already set up Email Print when you installed your product software, see the link below to use your product control panel to activate your unique email address. Or visit epson.com/connect (U.S), epson.ca/connect (Canada), or epsonconnect.com (Caribbean) to learn more about Email Print, create your Epson Connect account, and register your product to the Epson Connect service.
3. Now you are ready to send and print emails to your product's Email Print address.

Note: Go to epsonconnect.com and log into your Epson Connect account to personalize your product's email, adjust print settings, and set up other Epson Connect services.

Parent topic: Epson Connect Solutions for Smartphones, Tablets, and More

Related topics

Wi-Fi or Wired Networking

Using the Epson iPrint Mobile App

Use this free Apple and Android app to print and scan with networked Epson products. Epson iPrint lets you print PDFs, Microsoft Office documents, photos, and web pages over a wireless network. You can scan and save a file on your device, send it as an email, or upload it to an online service such as Box, Dropbox, Evernote, or Google Drive.

1. Connect your product to your wireless network. See the link below.
2. Visit epson.com/connect (U.S), epson.ca/connect (Canada), or epson.com.jm/connect (Caribbean) to learn more about Epson iPrint and check the compatibility of your mobile device.
3. Download Epson iPrint from the Apple App Store or Google Play.
4. Connect your mobile device to the same wireless network as your product.

5. Open Epson iPrint and select your Epson product.

Now you are ready to print or scan with your mobile device and your Epson product.

Parent topic: Epson Connect Solutions for Smartphones, Tablets, and More

Related topics

Wi-Fi or Wired Networking

Using Epson Remote Print

With Epson Remote Print software, you can print from your laptop or desktop computer to an Epson Email-enabled product anywhere in the world.

1. Connect your Epson product to your wireless network. See the link below.
2. If you did not already set up an Epson Connect account when you installed your product software, visit epsonconnect.com to create your account and register your product to the Epson Connect service.

   Note: Make a note of your product's email address.

3. Visit epsonconnect.com to learn more about Remote Print and how to download the Remote Print Driver software.
4. Download and install the Remote Print software.
5. Enter the email address and optional access key of your Epson product during Remote Print setup.
6. Now you are ready to print remotely. Select the print command in your laptop or desktop computer application and choose the Remote Print option for your Epson product.

Parent topic: Epson Connect Solutions for Smartphones, Tablets, and More

Related topics

Wi-Fi or Wired Networking

Using Epson Scan to Cloud

The Epson Scan to Cloud service allows you to scan and send a file as an email or upload it to an online service directly from your Epson product. Register an email address or online services such as Box, DropBox, Evernote, or Google Drive with your Epson Connect account.

1. Connect your Epson product to your network. See the link below.

2. If you did not already set up an Epson Connect account when you installed your product software, visit epsonconnect.com to create your account and register your product to the Epson Connect service.

   Note: Make a note of your product's email address and password.

3. Visit epsonconnect.com to sign into your account with the email address and password you selected.
4. Select your product, select **Scan to Cloud**, and select **Destination List**.
5. Click **Add**, then follow the instructions on the screen to create your destination list.
6. Now you are ready to use Scan to Cloud. Select the setting for scanning to Scan to Cloud on your Epson product control panel.

Parent topic: Epson Connect Solutions for Smartphones, Tablets, and More

Related tasks

Starting a Scan Using the Product Control Panel

Related topics

Wi-Fi or Wired Networking

Using AirPrint

AirPrint enables instant wireless printing from iPhone, iPad, and iPod touch with the latest version of iOS, and Mac with the latest version of OS X or macOS.

Note: If you disabled paper configuration messages on your product control panel, you cannot use AirPrint. See the link below to enable the messages, if necessary.

1. Load paper in your product.
2. Set up your product for wireless printing. See the link below.
3. Connect your Apple device to the same wireless network that your product is using.
4. Print from your device to your product.

Note: For details, see the AirPrint page on the Apple website.

Parent topic: Product Basics

Related references

Paper Source Settings Options

Related topics

Wi-Fi or Wired Networking

Using Google Cloud Print

With a Google Account, you can print from your Apple or Android device to your Epson product. You can also print from Chromebooks and the Google Chrome browser without drivers or cables.

1. Connect your Epson product to your wireless network. See the link below.
2. Note your product's IP address by checking your network status. See the link below.
3. Connect your computer or your Apple or Android device to the same wireless network as your Epson product.
4. Enter your product's IP address into the address bar of a web browser.
5. Select the **Google Cloud Print Services** option.

   Note: If you don't see the **Google Cloud Print Services** option, turn your product off and back on. If the option still doesn't appear, select the **Firmware Update** option and follow the on-screen instructions to update your product.

6. Click **Register**.
7. Select the checkbox to agree to the Usage Advisory and click **Next**.
8. Click **OK** to launch the sign-in page.

   A separate browser window opens.
9. Enter your Google Account username and password and click **Sign in**, or, if you don't have an account, click **Sign up for a new Google Account** and follow the on-screen instructions.
10. Click **Finish printer registration** to complete setup and print a test page.

Your product is now linked to your Google Account and can be accessed from any Chromebook, computer, Apple or Android device with Internet access. Visit Epson Support for Google Cloud Print (U.S) or Epson Support for Google Cloud Print (Canada) for more information on using Google Cloud Print, or the Google Cloud Print website for a list of supported apps.

Parent topic: Product Basics

Related tasks

Printing a Network Status Sheet

Related topics

Wi-Fi or Wired Networking

Android Printing Using the Epson Print Enabler

You can wirelessly print your documents, emails, photos, and web pages right from your Android phone or tablet (Android v4.4 or later). With a few taps, your Android device will discover your nearby Epson product and print.

1. Connect your Epson product to your wireless network. See the link below.
2. On your Android device, download the Epson Print Enabler plug-in from Google Play.
3. Go to **Settings** on your Android device, select **Printing**, and enable the Epson plug-in.
4. Connect your Android device to the same wireless network as your product.
5. Now you are ready to print. From an Android application such as Chrome or Gmail, tap the menu icon and print whatever is on the screen.

   Note: If you do not see your product, tap **All Printers** and select your product.

Parent topic: Product Basics

Related topics

Wi-Fi or Wired Networking

Using Fire OS Printing

You can wirelessly print from Amazon Fire tablets and phones to your nearby networked Epson product. There is no software to download, no drivers to install, and no cables to connect. With just a few taps in Email, Calendar, Contacts, and WPS Office, you can send whatever is on the screen to an Epson product.

1. Connect your Epson product to your wireless network. See the link below.
2. Connect your Amazon device to the same wireless network as your product.

3. Now you are ready to print. From your Amazon application, tap the print option and select your product to print whatever is on the screen.

   Note: If you see a message telling you that a plug-in is required, tap **OK** and tap **Download**. If your Amazon Fire product uses Fire OS 5 and above, your device automatically uses the built-in Mopria Print Service app to print.

Visit epson.com/connect (U.S), epson.ca/connect (Canada), or epson.com.jm/connect (Caribbean) to learn more about Fire OS Printing (one of many Epson Connect Partner Solutions) and check the compatibility of your mobile device.

Parent topic: Product Basics

Related topics

Wi-Fi or Wired Networking

Using Windows 10 Mobile Printing

You can wirelessly print from Windows 10 Mobile tablets and phones to your nearby networked Epson product. There is no software to download, no drivers to install, and no cables to connect. Look for the print option in your Windows 10 application to send whatever is on the screen to an Epson product.

1. Connect your Epson product to your wireless network. See the link below.
2. Connect your Windows 10 Mobile device to the same wireless network as your product.
3. Now you are ready to print. From your Windows 10 application, tap the print option and select your product to print whatever is on the screen.

Visit epson.com/connect (U.S), epson.ca/connect (Canada), or epson.com.jm/connect (Caribbean) to learn more about Windows 10 Mobile Printing (one of many Epson Connect Partner Solutions) and check the compatibility of your mobile device.

Parent topic: Product Basics

Related topics

Wi-Fi or Wired Networking

Using Epson Print and Scan App with Windows Tablets

You can use this free app to print photos and scan from your Windows (Windows 8 or higher) Surface RT or Pro tablet with networked Epson products. Epson Print and Scan App allows you to scan and capture images right to your tablet or to Microsoft OneDrive.

Note: The Epson Print and Scan App does not support Windows 10 Mobile printing.

1. Connect your Epson product to your wireless network. See the link below.
2. Download Epson Print and Scan App from the Microsoft Windows Store.
3. Connect your Windows tablet to the same wireless network as your product.
4. Open Epson Print and Scan App and select your Epson product.

   Now you are ready to print photos or scan.

Visit epson.com/connect (U.S), epson.ca/connect (Canada), or epson.com.jm/connect (Caribbean) to learn more about Epson Print and Scan App.

Parent topic: Product Basics

Related topics

Wi-Fi or Wired Networking

Wi-Fi or Wired Networking

See these sections to use your product on a Wi-Fi or wired network.

Network Security Recommendations
Wi-Fi Infrastructure Mode Setup
Wi-Fi Direct Mode Setup
Wi-Fi Protected Setup (WPS)
Printing a Network Status Sheet
Printing a Network Connection Report
Changing or Updating Network Connections

Network Security Recommendations

To help deter unauthorized access to your product over a network, you should protect your network environment using appropriate security measures.

Security measures such as these can help deter threats such as loss of user data, use of telephone and fax lines, and other intrusions:

- **Enable security on your wireless LAN**

  Enable the appropriate security on the wireless LAN you plan to use with your product. Network security such as a network password can deter interception of traffic over the wireless LAN. Your router may already have a default password enabled by your Internet service provider (ISP). See your ISP and router documentation for instructions on how to change the default password and better secure your network.

- **Connect your product only to a network protected by a firewall**

  Connecting your product directly to the Internet may leave it vulnerable to security threats. Instead, connect it to a router or other network connection protected by a firewall. Your router may already have a firewall set up by your Internet service provider; check with your ISP for confirmation. For best results, set up and use a private IP address for your network connection.

- **Change the default administrator password on your product**

  If your product has an option to set an administrator password, change the default administrator password to deter access by unauthorized users to personal data stored on your product, such as IDs, passwords, and contact lists.

Parent topic: Wi-Fi or Wired Networking

Wi-Fi Infrastructure Mode Setup

You can set up your product to communicate with your computer using a wireless router or access point. The wireless router or access point can be connected to your computer over a wireless or wired network.

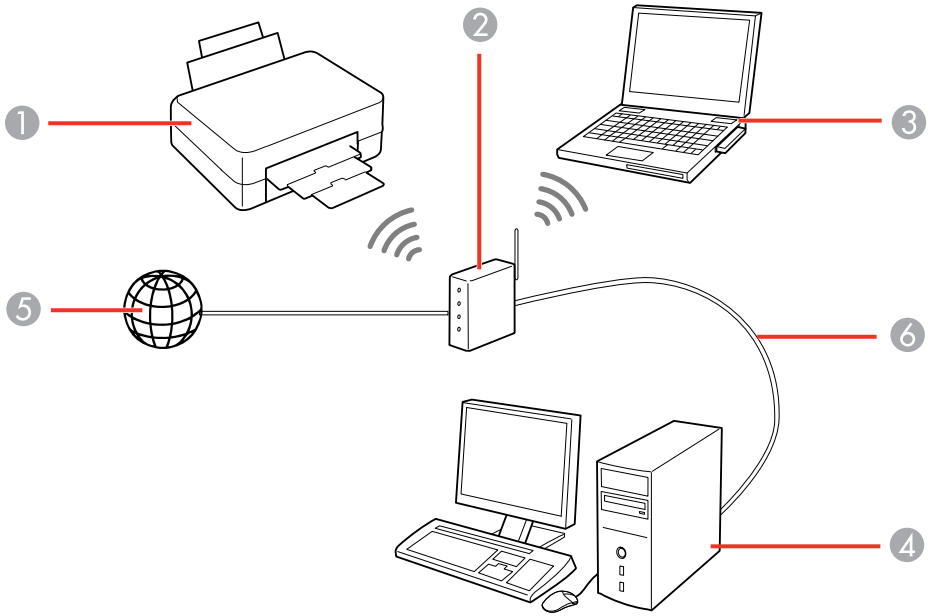

1 Epson product
2 Wireless router or access point
3 Computer with a wireless interface
4 Computer
5 Internet
6 Ethernet cable (used only for wired connection to the wireless router or access point)

Selecting Wireless Network Settings from the Control Panel

Parent topic: Wi-Fi or Wired Networking

Selecting Wireless Network Settings from the Control Panel

You can select or change wireless network settings using your product control panel.

To install your product on a wireless network, follow the instructions on the *Start Here* sheet and install the necessary software by downloading it from the Epson website. The installer program guides you through network setup.

Note: Breakdown or repair of this product may cause loss of fax and network data and settings. Epson is not responsible for backing up or recovering data and settings during or after the warranty period. We recommend that you make your own backup or print out your fax and network data and settings.

1. Press the ⌂ home button, if necessary.
2. Press the icon.

   You see a screen like this:

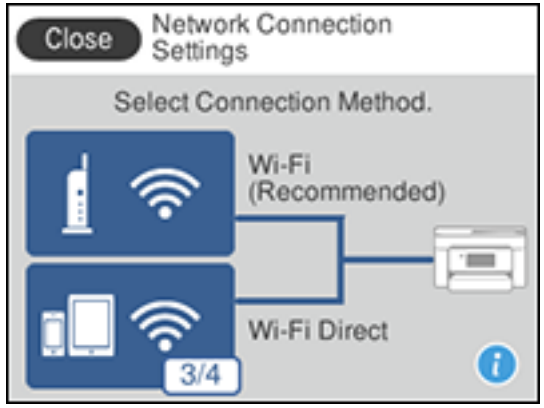

3. Select **Wi-Fi (Recommended)**.
4. Select **Start Setup** or **Change Settings**.
5. Select **Wi-Fi Setup Wizard**.
6. Select the name of your wireless network or select **Enter Manually** to enter the name manually. Use the displayed keypad to enter your network name.

7. Select the **Enter Password** field and enter your wireless password using the displayed keypad.

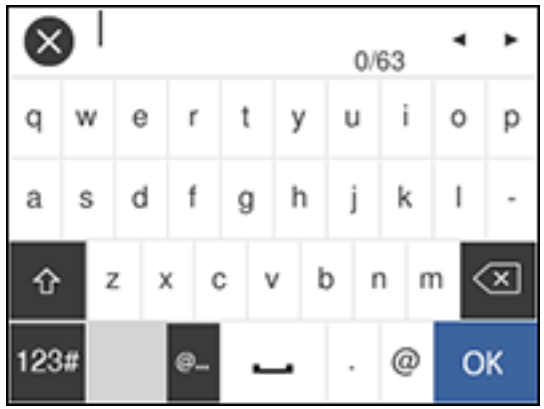

Note: The network name and password are case sensitive. Be sure to correctly enter uppercase and lowercase letters, and numeric or special characters.

- To move the cursor, select the left or right arrows.
- To change the case of letters, select ⇧.
- To delete the previous character, select ⌫.
- To enter numbers and symbols, select **123#**.
- To enter a space, select ␣.

8. Select **OK** when you finish entering your password.
9. Confirm the displayed network settings and select **Start Setup** to save them.
10. If you want to print a network setup report, select **Print Check Report**. (Otherwise, select **OK**.)
11. Press the ⌂ home button to exit.

    You see the icon on the LCD screen and should be able to connect to your product directly from your computer or device, and then print. If you are printing from a computer, make sure you installed the network software as described on the *Start Here* sheet.

Note: If you don't see the icon, you may have selected the wrong network name or entered the password incorrectly. Repeat these steps to try again.

Parent topic: Wi-Fi Infrastructure Mode Setup

Related tasks

Printing a Network Status Sheet

Wi-Fi Direct Mode Setup

You can set up your product to communicate directly with your computer or another device without requiring a wireless router or access point. In Wi-Fi Direct Mode, the product itself acts as a network access point for up to 4 devices.

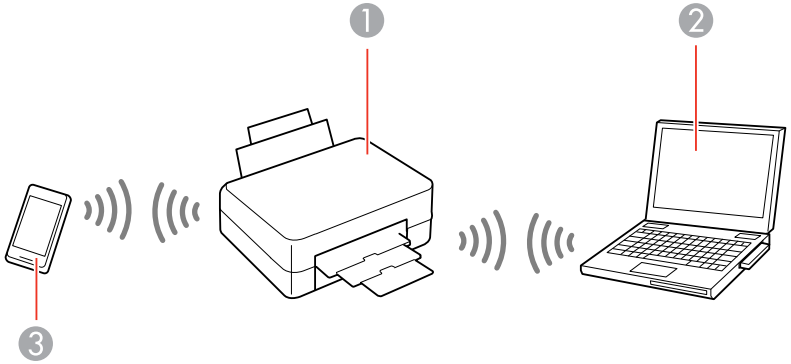

1 Epson product

2 Computer with a wireless interface

3 Other wireless device

Enabling Wi-Fi Direct Mode

Parent topic: Wi-Fi or Wired Networking

Enabling Wi-Fi Direct Mode

You can enable Wi-Fi Direct mode to allow direct communication between your product and computer or other devices without a wireless router or access point.

1. Press the home button, if necessary.
2. Press the icon.

   You see a screen like this:

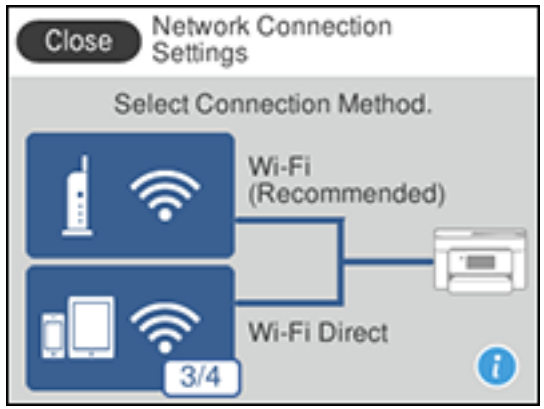

3. Select **Wi-Fi Direct**.
4. Scroll down and select **Start Setup**.
5. Select **Start Setup** again.

   You see a screen like this:

6. Use your computer or wireless device to select the Wi-Fi network name (SSID) displayed on the LCD screen, then enter the password shown.
7. Press the home button to exit.

   You see the icon on the LCD screen and should be able to connect to your product directly from your computer or device, and then print. If you are printing from a computer, make sure you installed the network software as described on the *Start Here* sheet.

   Note: If you don't see the icon on the LCD screen, you may have selected the wrong network name or entered the password incorrectly. Repeat these steps to try again.

Parent topic: Wi-Fi Direct Mode Setup

Wi-Fi Protected Setup (WPS)

If your network uses a WPS-enabled wireless router or access point, you can quickly connect your product to the network using Wi-Fi Protected Setup (WPS).

Note: To check if your router is WPS-enabled, look for a button labeled **WPS** on your router or access point. If there is no hardware button, there may be a virtual WPS button in the software for the device. Check your network product documentation for details.

Using WPS to Connect to a Network

Parent topic: Wi-Fi or Wired Networking

Using WPS to Connect to a Network

If you have a WPS-enabled wireless router or access point, you can use Wi-Fi Protected Setup (WPS) to connect your product to the network.

1. Press the home button, if necessary.
2. Press the icon.

You see a screen like this:

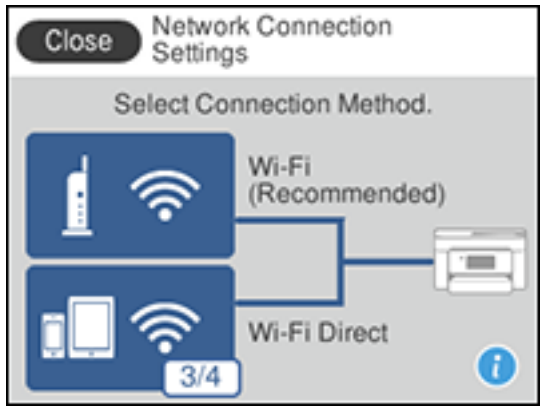

3. Select **Wi-Fi (Recommended)**.
4. Select **Start Setup** or **Change Settings**.
5. Select **Push Button Setup (WPS)**.
6. Follow the instructions on the LCD screen to complete WPS setup.
7. Press the home button to exit.

   You see the icon on the LCD screen and should be able to connect to your product directly from your computer or device, and then print. If you are printing from a computer, make sure you installed the network software as described on the *Start Here* sheet.

   Note: If you don't see the icon, repeat these steps to try again.

Parent topic: Wi-Fi Protected Setup (WPS)

Printing a Network Status Sheet

You can print a network status sheet for detailed information about your product's network status.

1. Press the home button, if necessary.
2. Select **Settings**.
3. Select **General Settings**.

You see a screen like this:

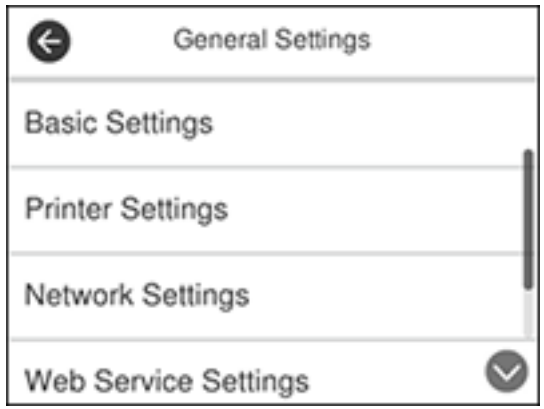

4. Select **Network Settings**.
5. Select **Network Status**.
6. Select **Print Status Sheet**.
7. Select **Print**.

Examine the settings shown on the network status sheet to diagnose any problems you have.

Parent topic: Wi-Fi or Wired Networking

Related tasks

Accessing the Web Config Utility

Printing a Network Connection Report

You can print a network connection report to view solutions to any problems you may have using your product on a network.

1. Press the ⌂ home button, if necessary.
2. Select **Settings**.
3. Select **General Settings**.

You see a screen like this:

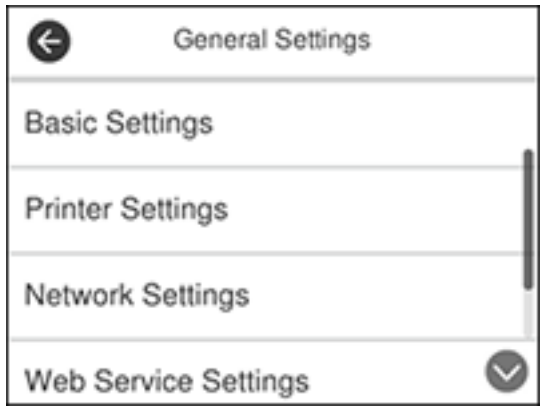

4. Select **Network Settings**.
5. Select **Connection Check**.
6. Select **Print Check Report**.
7. Select **Print**.

Examine the error codes and solutions shown on the network connection report.

Network Connection Report Codes and Messages

Parent topic: Wi-Fi or Wired Networking

Network Connection Report Codes and Messages

Check the error codes and messages on the network connection report to solve problems you may encounter with network connections. The tables here list solutions to problems based on the error codes and messages that may appear on the top of the report.

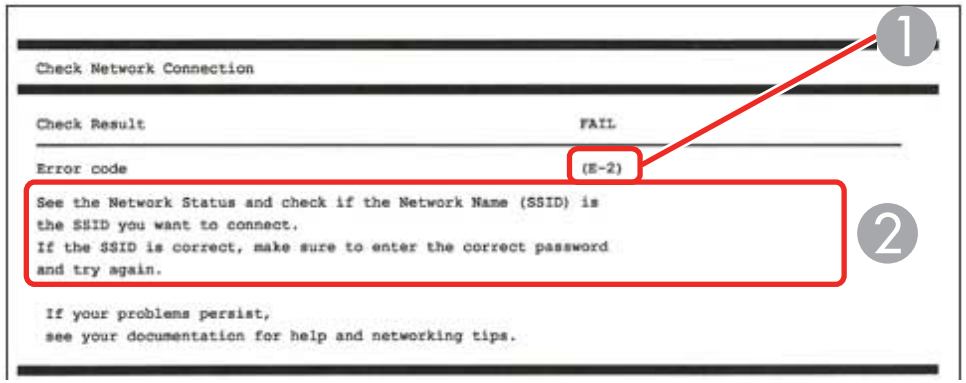

1 Error code

2 Message

Note: Error codes and messages listed here may not all apply to your product.

Error Codes and Messages

Error code and message	Solution
E1 Confirm that the network cable is connected and network devices such as hub, router, or access point are turned on.	Make sure your router, access point, and/or hub are turned on, and the network cable is securely connected to your device and to your product.

Error code and message	Solution
E2, E3, or E7 No wireless network names (SSID) found. Confirm that the router/access point is turned on and the wireless network (SSID) is set up correctly. Contact your network administrator for assistance. No wireless network names (SSID) found. Confirm that the wireless network name (SSID) of the PC you wish to connect is set up correctly. Contact your network administrator for assistance. Entered security key/password does not match the one set for your router/access point. Confirm security key/password. Contact your network administrator for assistance.	Check the following: • Make sure your router or access point is turned on, and is correctly connected to your computer or network device. • Turn off the router or access point, wait about 10 seconds, and turn it on again. • Move your product closer to your router or access point, and remove any obstacles between them. Also move your product away from devices such as wireless phones or microwaves. • Confirm that the SSID shown on the network connection report matches the label on your router or access point. Also make sure your SSID uses only ASCII characters and symbols, or your product cannot display the SSID correctly. • If you are trying to connect using the WPS push button method, make sure your router or access point supports it. • If you are using a network password, check the label on your router or access point to confirm that you are using the correct password, or check with your network administrator or router/access point documentation. • If you are connecting to a smart device that generates an SSID, check the device documentation for the SSID and password you should use. • If your wireless connection suddenly disconnects, and another smart device was added to the network using a WPS push button method or your network was set up using a non-WPS push button method, try downloading and installing your product software again.

Error code and message	Solution
E5 Security mode (e.g. WEP, WPA) does not match the current setting of the printer. Confirm security mode. Contact your network administrator for assistance.	If the security on your router or access point is not one of the following types, change the type of security on your router or access point and reset your product's network settings. • WEP-64 bit (40 bit) • WEP-128 bit (104 bit) • WPA PSK (TKIP/AES); also known as WPA Personal • WPA2 PSK (TKIP/AES); also known as WPA2 Personal • WPA (TKIP/AES) • WPA2 (TKIP/AES) Also make sure you are connecting to the 2.4GHz band on your network and using the password for that band.
E6 MAC address of your printer may be filtered. Check whether your router/access point has restrictions such as MAC address filtering. See the documentation of the router/access point or contact your network administrator for assistance.	If your router or access point has MAC address filtering enabled, register your product's MAC address so it is not filtered. Locate the MAC address on the network connection report and check your router or access point documentation for instructions. If your router or access point is using shared authentication with WEP security, confirm that you are using the correct authentication key and index. If your router or access point limits the number of connected devices, raise the connection limit. See your router or access point documentation for instructions.
E8 Incorrect IP address is assigned to the printer. Confirm IP address setup of the network device (hub, router, or access point). Contact your network administrator for assistance.	If your product's **Obtain IP Address** setting is set to **Auto**, enable DHCP on your router or access point. If it is set to **Manual**, the IP address may be out of range or on a different network segment; set a valid IP address using your product control panel or the Web Config utility. You can also try turning off your product and the router or access point, waiting about 10 seconds, and turning them on again.

Error code and message	Solution
E9 Confirm the connection and network setup of the PC or other device. Connection using the EpsonNet Setup is available. Contact your network administrator for assistance.	Make sure your computer or network device are turned on. Also make sure that you can access the internet and other devices on the same network from the devices you are trying to connect to your product. If you still cannot connect to your product, turn off your router or access point, wait about 10 seconds, and turn it on again. Download and install your product software again to reset your network settings.
E10 Confirm IP address, subnet mask, and default gateway setup. Connection using the EpsonNet Setup is available. Contact your network administrator for assistance.	Make sure other devices on the network are turned on and do the following: • If your product's **Obtain IP Address** setting is set to **Manual**, check the IP address, subnet mask, and default gateway addresses on the network connection report to see if they are correct. If not, correct the settings. • If DHCP is enabled, set your product's **Obtain IP Address** setting to **Auto**. If you want to use the DHCP-assigned address as a static address, set the **Obtain IP Address** setting to **Manual**, enter the product's IP address as listed on the network connection report, and set the subnet mask to 255.255.255.0. If you still cannot connect to your product, turn off your router or access point, wait about 10 seconds, and turn it on again.
E11 Setup is incomplete. Confirm default gateway setup. Connection using the EpsonNet Setup is available. Contact your network administrator for assistance.	If you set your product's **TCP/IP Setup** setting to **Manual**, check that the default gateway address listed on the network connection report is correct. Also turn on the device that is set as the default gateway.

Error code and message	Solution
E12 Confirm the following -Entered security key/password is correct -Index of the security key/password is set to the first number -IP address, subnet mask, or default gateway setup is correct Contact your network administrator for assistance.	Make sure other devices on the network are turned on and do the following: • Make sure the IP address, subnet mask, and default gateway addresses are correct, if you are entering them manually. • Confirm that the subnet mask and default gateway addresses for other devices are the same. • Make sure the IP address does not conflict with other devices. If you still cannot connect to your product, do the following: • Turn off your router or access point, wait about 10 seconds, and turn it on again. • Download and install your product software again to reset your network settings. • If your router or access point uses WEP security with several registered passwords, make sure that the first registered password is set on your product.
E13 Confirm the following -Entered security key/password is correct -Index of the security key/password is set to the first number -Connection and network setup of the PC or other device is correct Contact your network administrator for assistance.	Make sure your router, access point, and/or hub are turned on. Also make sure the TCP/IP setup on your router, access point, and/or hub is not set manually; this may cause your product's network settings to differ from the manually setup devices. If you still cannot connect to your product, do the following: • Turn off your router or access point, wait about 10 seconds, and turn it on again. • Download and install your product software again to reset your network settings. • If your router or access point uses WEP security with several registered passwords, make sure that the first registered password is set on your product.

Network Environment Messages

Message	Solution
The same SSID may be set on several access points.	Check the settings on your router and other access points to make sure each one uses a different SSID.
The Wi-Fi environment needs to be improved. Turn the wireless router off and then turn it on. If the connection does not improve, see the documentation for the wireless router.	Move your product closer to your router or access point, and remove any obstacles between them. Then turn off your router or access point, wait about 10 seconds, and turn it back on again. If you still cannot connect to your product, check the documentation that came with your router or access point for solutions.
*No more devices can be connected. Disconnect one of the connected devices if you want to add another one.	You can connect up to four computers or other devices to your product using a Wi-Fi Direct (Simple AP) connection. If you want to add another device, disconnect an existing connected device first.

Parent topic: Printing a Network Connection Report

Changing or Updating Network Connections

See these sections to change or update how your product connects to a network.

Accessing the Web Config Utility
Changing a USB Connection to a Wi-Fi Connection
Changing a Wi-Fi Connection to a Wired Network Connection
Connecting to a New Wi-Fi Router
Disabling Wi-Fi Features

Parent topic: Wi-Fi or Wired Networking

Related tasks
Selecting Wireless Network Settings from the Control Panel

Accessing the Web Config Utility

You can select your product's network settings and confirm its operating status using a web browser. You do this by accessing your product's built-in Web Config utility from a computer or other device that is connected to the same network as your product.

1. Print a network status sheet.

2. Locate the IP address for your product that is listed on the network status sheet.
3. On a computer or other device connected to the same network as your product, open a web browser.
4. Enter your product's IP address into the address bar.

   You see the available Web Config utility options.

Parent topic: Changing or Updating Network Connections

Related tasks

Printing a Network Status Sheet

Changing a USB Connection to a Wi-Fi Connection

If you have already connected your product to your computer using a USB connection, you can change to a Wi-Fi connection.

1. Disconnect the USB cable from your product.
2. Uninstall your product software.
3. Download and install your product software from the Epson website using the instructions on the *Start Here* sheet.

Parent topic: Changing or Updating Network Connections

Changing a Wi-Fi Connection to a Wired Network Connection

If you have already connected your product to your computer wirelessly, you can change to a wired network connection if necessary.

1. Disable your product's Wi-Fi features.
2. Connect one end of an Ethernet network cable to the product's **LAN** port.
3. Connect the other end to any available LAN port on your router or access point.
4. Uninstall your product software.
5. Download and install your product software from the Epson website.
6. Follow the on-screen instructions to install the software.
7. When you see the Select Your Connection screen, select **Wired network connection**.
8. If you see a Select Setup Option screen, select **Set up printer for the first time**.
9. Continue following the rest of the on-screen instructions.

Parent topic: Changing or Updating Network Connections

Related tasks

Disabling Wi-Fi Features

Connecting to a New Wi-Fi Router

If you change the wireless router you have been using on your network, you need to update your product's Wi-Fi connection to the new router.

Note: If you switch to a 5 GHz wireless router, set the router to operate in dual band (2.4 GHz and 5 GHz) mode. See your router documentation for instructions.

1. Do one of the following:
   - **Windows**: Uninstall your product software.
   - **Mac**: Go to the next step.
2. Download and install your product software from the Epson website using the instructions on the *Start Here* sheet.

Parent topic: Changing or Updating Network Connections

Disabling Wi-Fi Features

You may need to disable your product's Wi-Fi features if you change your network connection type or need to solve a problem with your network connection.

Note: Before disabling Wi-Fi features, make a note of your product's SSID (network name) and password, and any network settings selected for the Epson Connect services you may use.

1. Press the home button, if necessary.
2. Press the icon.

You see a screen like this:

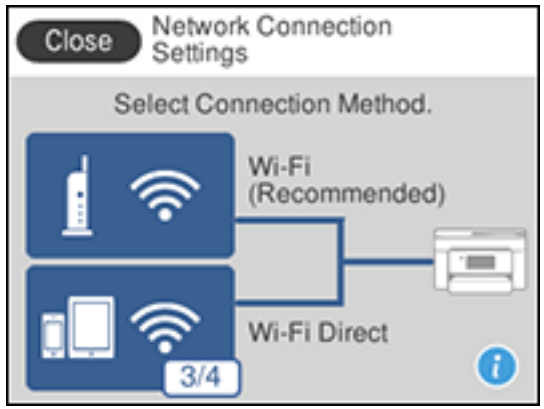

3. Select **Wi-Fi (Recommended)**.
4. Select **Change Settings**.
5. Select **Others**.
6. Select **Disable Wi-Fi**.
7. Select **Start Setup** to disable Wi-Fi.

Parent topic: Changing or Updating Network Connections

Loading Paper

Before you print, load paper for the type of printing you will do.

Loading Paper in the Cassette
Paper Loading Capacity
Double-sided Printing Capacity
Compatible Epson Papers
Borderless Paper Type Compatibility
Paper or Media Type Settings - Printing Software
Selecting the Paper Settings - Control Panel
Selecting the Default Paper Source Settings
Selecting the Universal Print Settings

Loading Paper in the Cassette

You can load paper up to this size in the paper cassette: Legal (8.5 × 14 inches [216 × 356 mm]).

Note: Before loading paper, make sure your product is not currently printing, scanning, or copying.

1. Open the front cover.

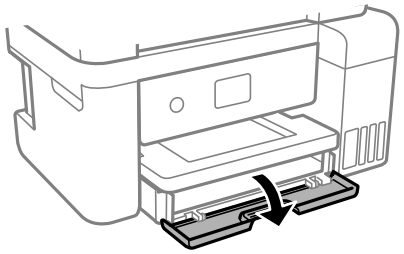

2. Pull out the paper cassette until it stops.

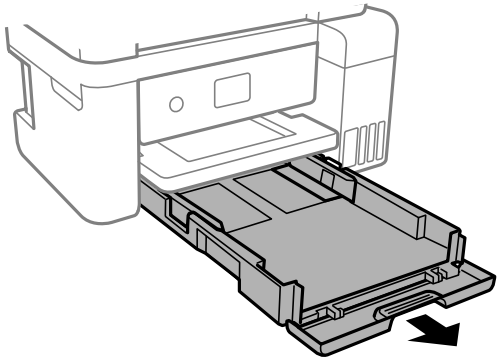

3. Slide the edge guides outward.

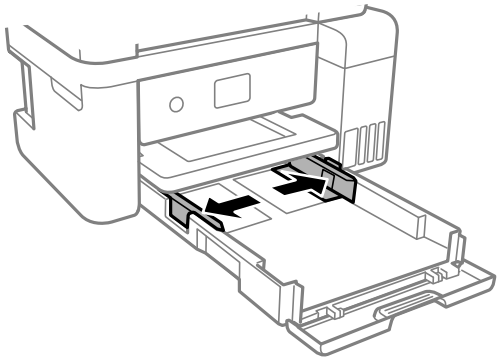

4. Do one of the following:
   - Insert paper into the cassette with the glossy or printable side facedown and slide it in until it stops.

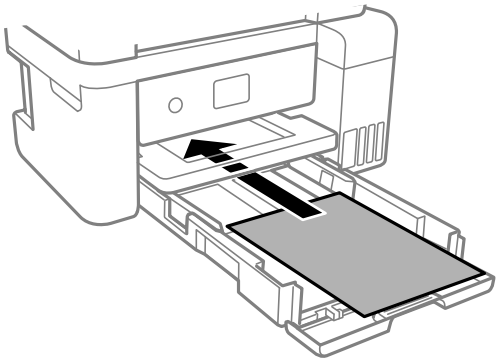

Note: Make sure the paper is loaded against the rear of the cassette.

   - For legal-size paper, extend the legal paper guide and load paper using the guide line as shown.

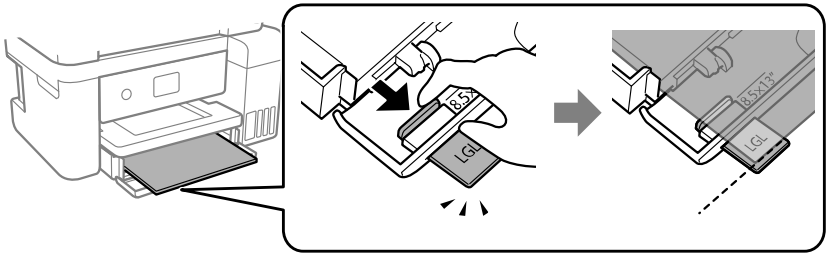

- Insert up to 10 envelopes with the printable side facedown and flap edge left, as shown.

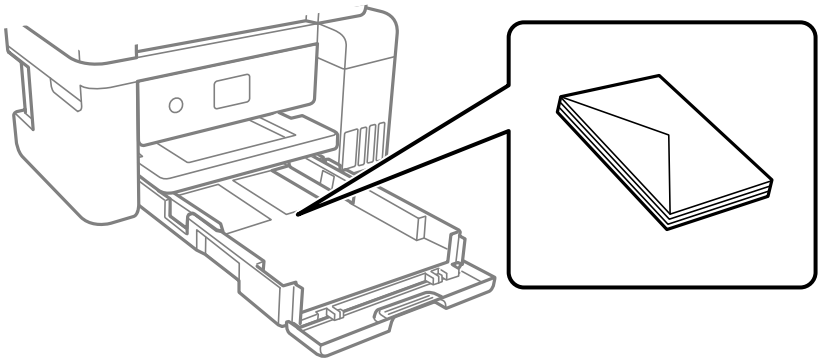

- Load a sheet of loose-leaf or other paper with holes as shown.

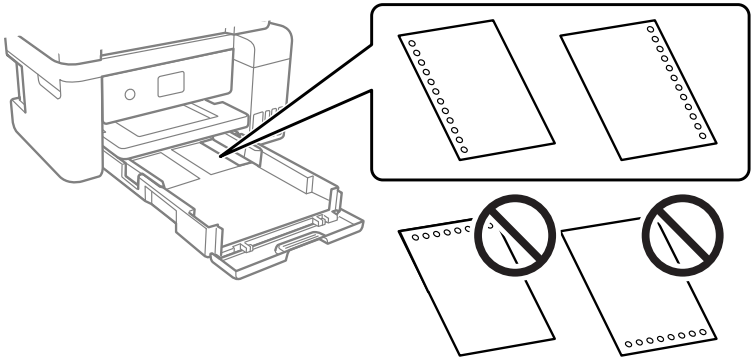

Note: Do not select automatic 2-sided printing for this type of paper and do not print over the holes.

5. Slide the edge guides against the paper, but not too tightly.

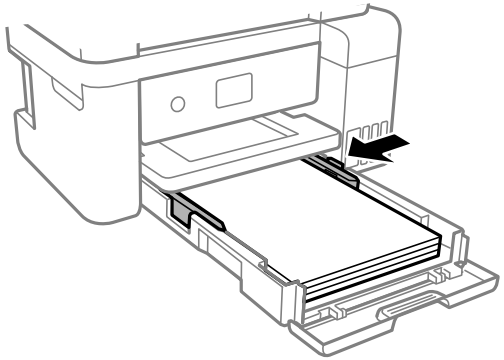

Note: Make sure the paper fits under the tabs on the edge guides.

6. Slide the cassette back into the product until it stops and close the front cover.
7. Select the size and type of the paper you loaded on the product LCD screen and select **OK**.

   Note: If you are printing on letterhead, make sure you select **Letterhead** as the paper type. Make sure you select the correct paper size setting.

8. Extend the output tray.

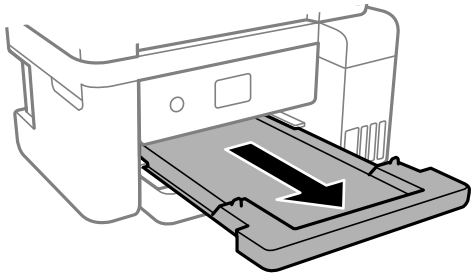

Note: Do not remove or insert the paper cassette during printing.

Always follow these paper loading guidelines:

- Load only the recommended number of sheets.
- Load paper short edge first and printable side facedown.
- Make sure the paper is under the tabs on the edge guides and not sticking out from the rear end of the cassette.
- If you have trouble loading a stack of envelopes, press each envelope flat before loading it or load one envelope at a time.
- If print quality declines when printing multiple envelopes, try loading one envelope at a time.
- Load letterhead or pre-printed paper top edge first.
- Check the paper package for any additional loading instructions.

Parent topic: Loading Paper

Related references

Paper Loading Capacity

Paper Loading Capacity

See the table here for the loading capacity of the paper cassettes.

Paper type	Loading capacity
Plain paper Copy paper Letterhead paper	Letter (8.5 × 11 inches [216 × 279 mm]) or A4 (8.3 × 11.7 inches [210 × 297 mm]) size or smaller: 250 sheets
	Legal (8.5 × 14 inches [216 × 356 mm]) or 8.5 × 13 inches [216 × 330 mm] size: 1 sheet
Epson Bright White Paper	200 sheets
Epson Presentation Paper Matte	100 sheets

Paper type	Loading capacity
Epson Premium Presentation Paper Matte Epson Photo Paper Glossy Epson Premium Photo Paper Glossy Epson Ultra Premium Photo Paper Glossy Epson Premium Photo Paper Semi-gloss	20 sheets If paper feeds incorrectly, or printing is uneven or smeared, load 1 sheet at a time.
Epson Premium Presentation Paper Matte Double-sided	1 sheet
Envelopes	10 envelopes

Parent topic: Loading Paper

Double-sided Printing Capacity

You can print double-sided using Auto or Manual mode on the paper types and sizes listed here.

Paper type	Size	Double-sided printing capacity	
		Auto	Manual
Plain paper Copier paper	Letter (8.5 × 11 inches [216 × 279 mm]) or A4 (8.3 × 11.7 inches [210 × 297 mm]) or smaller	200 sheets	30 sheets
	Legal (8.5 × 14 inches [216 × 356 mm])	—	1 sheet
Epson Bright White Paper	Letter (8.5 × 11 inches [216 × 279 mm])	200 sheets	30 sheets
Epson Premium Presentation Paper Matte Double-sided	Letter (8.5 × 11 inches [216 × 279 mm])	—	1 sheet

You cannot print double-sided on the following paper types:

- Epson Presentation Paper Matte
- Epson Photo Paper Glossy

- Epson Premium Photo Paper Glossy
- Epson Premium Photo Paper Semi-gloss
- Epson Ultra Premium Photo Paper Glossy
- Epson Premium Presentation Paper Matte
- Letterhead paper
- Envelopes

Parent topic: Loading Paper

Compatible Epson Papers

You can purchase genuine Epson ink, maintenance boxes, and paper at epson.com (U.S. sales), epson.ca (Canadian sales), or epson.com.jm (Caribbean sales). You can also purchase supplies from an Epson authorized reseller. To find the nearest one, call 800-GO-EPSON (800-463-7766) in the U.S. or 800-807-7766 in Canada.

Paper Type	Size	Part number	Sheet count
Epson Bright White Paper	Letter (8.5 × 11 inches [216 × 279 mm])	S041586	500
Epson Presentation Paper Matte	Letter (8.5 × 11 inches [216 × 279 mm])	S041062	100
	Legal (8.5 × 14 inches [216 × 356 mm])	S041067	100
Epson Premium Presentation Paper Matte	8 × 10 inches (203 × 254 mm)	S041467	50
	Letter (8.5 × 11 inches [216 × 279 mm])	S041257 S042180	50 100
Epson Premium Presentation Paper Matte Double-sided	Letter (8.5 × 11 inches [216 × 279 mm])	S041586	50
Epson Photo Paper Glossy	4 × 6 inches (102 × 152 mm)	S041809 S042038	50 100
	Letter (8.5 × 11 inches [216 × 279 mm])	S041141 S041649 S041271	20 50 100

Paper Type	Size	Part number	Sheet count
Epson Premium Photo Paper Glossy	4 × 6 inches (102 × 152 mm)	S041808 S041727	40 100
	16:9 wide (4 × 7.1 inches [102 × 181 mm])	S042109	20
	5 × 7 inches (127 × 178 mm)	S041464	20
	8 × 10 inches (203 × 254 mm)	S041465	20
	Letter (8.5 × 11 inches [216 × 279 mm])	S042183 S041667	25 50
Epson Ultra Premium Photo Paper Glossy	4 × 6 inches (102 × 152 mm)	S042181 S042174	60 100
	5 × 7 inches (127 × 178 mm)	S041945	20
	8 × 10 inches (203 × 254 mm)	S041946	20
	Letter (8.5 × 11 inches [216 × 279 mm])	S042182 S042175	25 50
Epson Premium Photo Paper Semi-gloss	4 × 6 inches (102 × 152 mm)	S041982	40
	Letter (8.5 × 11 inches [216 × 279 mm])	S041331	20

Parent topic: Loading Paper

Borderless Paper Type Compatibility

You can print borderless photos on compatible paper types in compatible sizes:

Borderless Paper Types

- Epson Bright White Paper
- Epson Photo Paper Glossy
- Epson Premium Photo Paper Glossy
- Epson Ultra Premium Photo Paper Glossy
- Epson Premium Photo Paper Semi-gloss

- Epson Premium Presentation Paper Matte
- Epson Premium Presentation Paper Matte Double-sided

Borderless Paper Sizes

- 4 × 6 inches (102 × 152 mm)
- 5 × 7 inches (127 × 178 mm)
- 16:9 wide (4 × 7.1 inches [102 × 181 mm])
- A4 (8.3 × 11.7 inches [210 × 297 mm])
- Letter (8.5 × 11 inches [216 × 279 mm])

Parent topic: Loading Paper

Paper or Media Type Settings - Printing Software

For this paper	Select this paper Type or Media Type setting
Plain paper Epson Bright White Paper	Plain Paper / Bright White Paper
Letterhead paper	Letterhead
Envelopes	Envelope
Epson Ultra Premium Photo Paper Glossy	Ultra Premium Photo Paper Glossy
Epson Premium Photo Paper Glossy	Premium Photo Paper Glossy
Epson Photo Paper Glossy	Photo Paper Glossy
Epson Premium Photo Paper Semi-gloss	Premium Photo Paper Semi-Gloss
Epson Presentation Paper Matte Epson Premium Presentation Paper Matte Epson Premium Presentation Paper Matte Double-sided	Premium Presentation Paper Matte

Note: The settings listed here are available only when printing from your computer; they do not apply to your product's control panel settings.

Parent topic: Loading Paper

Selecting the Paper Settings - Control Panel

You can change the default paper size and paper type for each source using the control panel on the product.

1. Press the home button, if necessary.
2. Select **Settings** > **General Settings** > **Printer Settings** > **Paper Source Settings** > **Paper Setting**.

   You see a screen like this:

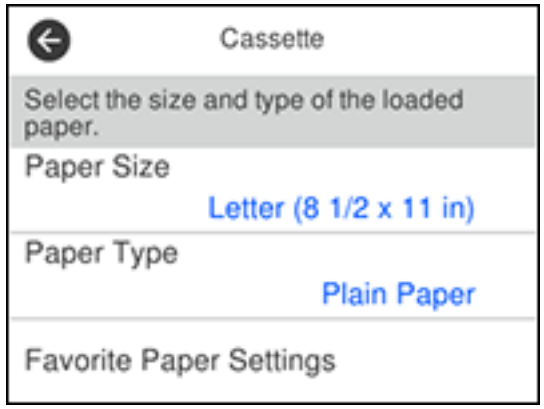

3. Select **Paper Size**.
4. Select the paper size you loaded.
5. Select **Paper Type**.
6. Select the paper type you loaded.
7. Select **Favorite Paper Settings** to choose from a list of commonly used paper settings.
8. Select to exit.

Paper Type Settings - Control Panel

Parent topic: Loading Paper

Paper Type Settings - Control Panel

Select a **Paper Type** setting that matches the paper you loaded.

Paper type loaded	Paper Type setting
Plain paper Epson Bright White Paper	Plain Paper
Letterhead paper	Letterhead
Envelopes	Envelope
Epson Ultra Premium Photo Paper Glossy	Ultra Glossy
Epson Premium Photo Paper Glossy	Prem. Glossy
Epson Photo Paper Glossy	Glossy
Epson Premium Photo Paper Semi-gloss	Prem. Semi-Gloss
Epson Presentation Paper Matte Epson Premium Presentation Paper Matte Epson Premium Presentation Paper Matte Double-sided	Prem. Matte

Parent topic: Selecting the Paper Settings - Control Panel

Selecting the Default Paper Source Settings

You can change default paper source settings using the control panel on the product.

1. Press the ⌂ home button, if necessary.
2. Select **Settings** > **General Settings** > **Printer Settings**.

You see a screen like this:

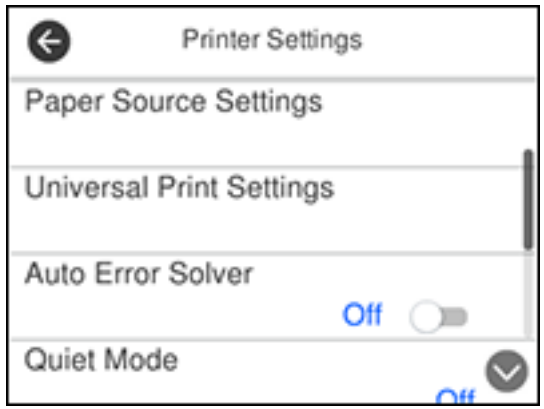

3. Select one of these **Auto Error Resolver** options:
   - Turn on this setting to display a warning and print single-sided when a 2-sided printing error occurs, or to print only what the printer could process when a memory full error occurs.
   - Turn off this setting to display an error message and stop printing if an error occurs.
4. Select the **Paper Source Settings** options you want to use.
5. When you are finished, press the ⌂ home button to exit.

Paper Source Settings Options

Parent topic: Loading Paper

Paper Source Settings Options

Select the paper source options you want to use for your print jobs.

Paper Source Settings option	Available settings	Description
Paper Setting	Various	Select the paper size and type for each paper source
A4/Letter Auto Switching	**On**	Select **On** to switch the selected paper size to match the loaded paper (Letter or A4) if the wrong size is selected
	Off	

Paper Source Settings option	Available settings	Description
Error Notice	**Paper Size Notice**	Select **On** for either of these settings to display an error message when the selected paper type or size does not match the loaded paper
	Paper Type Notice	
Paper Setup Auto Display	**On**	Select **On** to automatically display a menu that lets you select the paper size and type when you load paper in the product **Note:** If this setting is disabled, you cannot print using AirPrint.
	Off	

Parent topic: Selecting the Default Paper Source Settings

Selecting the Universal Print Settings

You can change the default universal print settings using the control panel on the product.

1. Press the home button, if necessary.
2. Select **Settings** > **General Settings** > **Printer Settings** > **Universal Print Settings**.

   You see this screen:

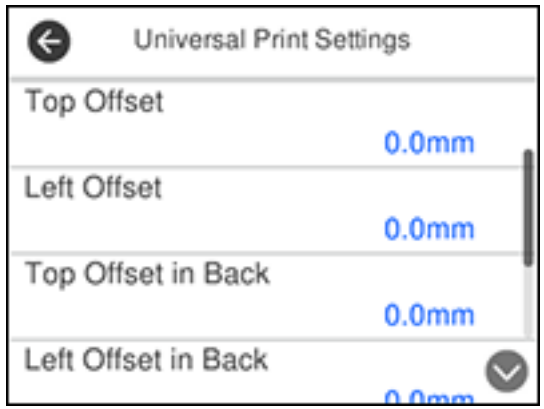

3. Adjust the settings as necessary.
4. When you are finished, press the home button to exit.

Universal Print Settings Options

Parent topic: Loading Paper

Universal Print Settings Options

Select the universal print setting options you want to use for your print jobs.

Universal Print Settings option	Available settings	Description
Top Offset	—	Adjust the top or left margin
Left Offset		
Top Offset in Back	—	Adjust the top or left margin of the back page when printing double-sided.
Left Offset in Back		
Check Paper Width	**On**	Select **On** to check the paper width before printing. This prevents printing beyond the edges of the paper when the paper size settings are incorrect, but may reduce the printing speed.
	Off	
Skip Blank Page	**On**	Select **On** to skip printing of blank pages automatically
	Off	

Parent topic: Selecting the Universal Print Settings

Placing Originals on the Product

Follow the instructions here to place your original documents or photos on the product.

Caution: Do not place anything on top of your product or use its cover as a writing surface to avoid damaging it.

Placing Originals on the Scanner Glass
Placing Originals in the Automatic Document Feeder
ADF Original Document Specifications

Placing Originals on the Scanner Glass

You can place originals up to this size on the scanner glass: Letter (8.5 × 11 inches [216 × 279 mm]) or A4 (8.3 × 11.7 inches [210 × 297 mm]).

Note: When originals are placed in the ADF and on the scanner glass, priority is given to the originals in the ADF.

1. Open the document cover.

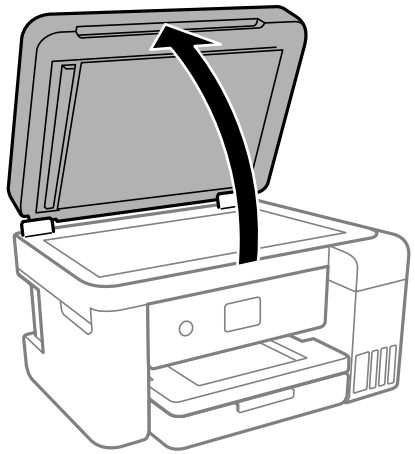

2. Place your original facedown on the scanner glass with the top facing into the corner. Slide the original to the edges of the indicated corner.

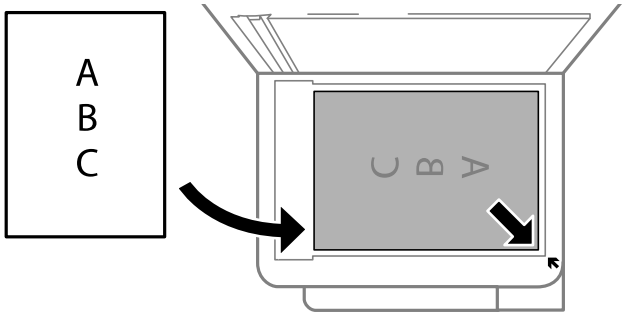

Note: The edges of your original may be cropped by 0.06 inch (1.5 mm) from the edge of the scanner glass. Manually position your original away from the edges to prevent cropping.

3. Close the document cover gently to keep your original in place.

Caution: Do not push down on the document cover or scanner glass or you may damage the product.

Parent topic: Placing Originals on the Product

Related topics

Copying

Scanning

Faxing

Placing Originals in the Automatic Document Feeder

You can place single- or multi-page original documents in the Automatic Document Feeder (ADF). Make sure the originals meet the Automatic Document Feeder specifications before loading them.

Caution: Make sure your originals are not creased or folded, and do not contain holes, staples, tape, or other materials that could obstruct the feeder.

Caution: Do not place photographs or valuable artwork in the ADF. Place fragile or valuable originals on the scanner glass to avoid wrinkling or damaging them.

1. Open the ADF document support and slide out the ADF output tray extension.

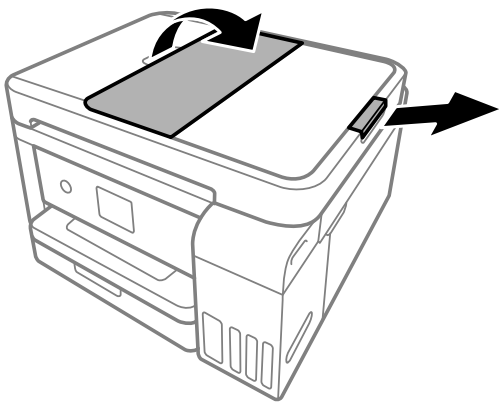

2. Slide the ADF edge guide outward.

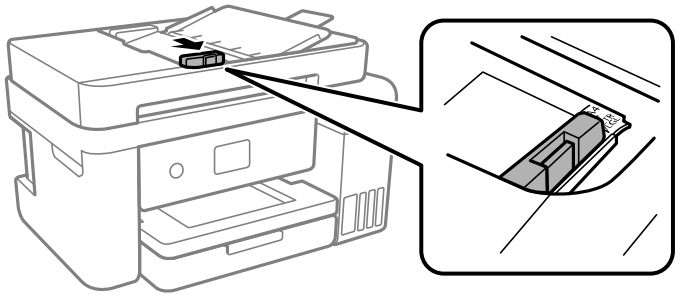

3. Fan your stack of originals and tap them gently on a flat surface to even the edges.

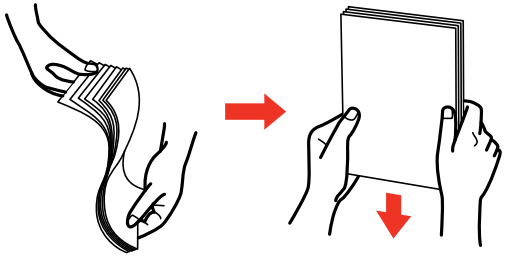

4. Insert the originals into the ADF faceup and top-edge first.

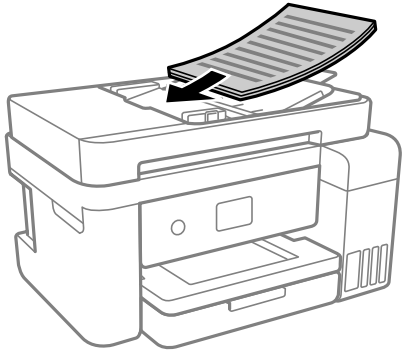

The **ADF** icon on the Copy, Scan, and Fax screens lights up.

5. Slide the ADF edge guide against the originals, but not too tightly.

Note: If you are copying two originals onto one sheet, make sure the originals are loaded as shown:

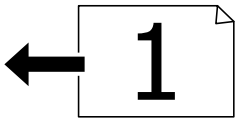

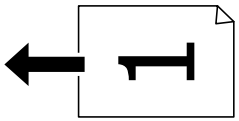

Parent topic: Placing Originals on the Product

Related topics

Copying

Scanning

Faxing

ADF Original Document Specifications

You can load original documents that meet these specifications in the ADF.

Paper type	Paper size	Paper weight	Loading capacity
Plain paper	Letter (8.5 × 11 inches [216 × 279 mm])	17 to 24 lb (64 to 95 g/m²)	Approximately 30 sheets
	A4 (8.3 × 11.7 inches [210 × 297 mm])		
	Legal (8.5 × 14 inches [216 × 356 mm])		10 sheets
	8.5 × 13 inches (216 × 330 mm) size		

Caution: Do not load the following types of originals in the ADF, or they may be damaged or may damage the scanner. Use the scanner glass for these types of originals:

- Photos
- Thermal paper
- Fabric or other non-paper originals
- Originals with uneven surfaces, such as embossed documents
- Originals containing staples or paper clips
- Originals with carbon paper backing
- Originals with wet ink
- Originals that are bound
- Originals with labels, stickers, or sticky notes
- Ripped, curled, folded, deteriorated, or wrinkled originals
- Originals with holes
- Transparencies
- Carbon-less paper
- Originals that are cut in an irregular shape or with corners that are not right angles

Parent topic: Placing Originals on the Product

Copying

See the information here to copy documents or photos using your product.

Note: Copies may not be exactly the same size as your originals.

Copying Documents or Photos
Copying Options

Copying Documents or Photos

You can copy documents or photos onto various sizes and types of paper, including Epson special papers.

1. Place your original document or photo on the scanner glass, or place multi-page documents in the ADF.
2. Load the paper you want to print on.
3. Press the ⌂ home button, if necessary.
4. Select **Copy**.

   You see a screen like this:

5. To print more than one copy, select **Copies** and use the displayed keypad to enter the number of copies.

6. Change any of the displayed settings as necessary.
7. Select **Advanced Settings** to view and change additional copy settings, if necessary.
8. When you are ready to copy, select the **Copy** icon.

   Note: To cancel printing, select **Cancel**.

Parent topic: Copying

Related references

Paper Loading Capacity
Double-sided Printing Capacity
Compatible Epson Papers

Related tasks

Loading Paper in the Cassette

Related topics

Placing Originals on the Product

Copying Options

Select the copying options you want to use for your copies.

Note: Not all options or settings may be available, depending on other copying settings.

Copy

Copying option	Available settings	Description
B&W	—	Copies the document in black and white
Color	—	Copies the document in color
2-Sided	**1>1-Sided**	Select to make 2-sided copies. When you select **1>2-Sided**, also select the orientation and binding edge for your originals or copies.
	1>2-Sided	
Density selector	Varying levels	Adjusts the lightness or darkness of copies

Advanced Settings

Copying option	Available settings	Description
Paper Setting	Various settings	Selects the paper size and paper type
Reduce/Enlarge	**100%/Actual Size**	Copies the original at its full size
	Auto Fit Page	Automatically sizes the image to fit the paper size you selected
	45%->195% and other conversions	Automatically converts from one size to another
Original Size	Various sizes	Select the document size of your original
Multi-Page	**Single Page**	Copies each page of the original onto an individual sheet
	2-up	Copies two pages onto one sheet. Scroll down and select the document orientation and layout order settings as necessary.
Quality	**Standard**	Adjusts the quality of your copies
	Best	
Original Orientation	**Up Direction**	Specifies the orientation of your originals
	Left Direction	
Remove Shadow	**Off**	Select **On** to erase the shadows that appear in the center of a document when copying a book or that appear around a document when copying thick paper
	On	
Remove Punch Holes	**Off**	Select **On** to erase the binding holes on a document
	On	
ID Card Copy	**Off**	Select **On** to copy both sides of an ID card onto one side of a sheet of paper
	On	
Borderless Copy	**Off**	Adjusts the amount to expand the original photo when printing borderless photos
	On	
	Standard	
	Medium	
	Minimum	

Parent topic: Copying

Printing from a Computer

Before printing from your computer, make sure you have set up your product and installed its software as described on the *Start Here* sheet.

Note: If you have an Internet connection, it is a good idea to check for updates to your product software on Epson's support website. If you see a Software Update screen, select **Enable automatic checking** and click **OK**. The update scans your system to see if you have the latest product software. Follow the on-screen instructions.

Printing with Windows
Printing with the Built-in Epson Driver - Windows 10 S
Printing on a Mac
Printing From a Chromebook
Cancelling Printing Using the Product

Printing with Windows

You can print with your product using any Windows application, as described in these sections.

Note: If you are using your Epson product with the Windows 10 S operating system, you cannot use the software described in this section. You also cannot download and install any Epson product software from the Epson website for use with Windows 10 S; you must obtain software only from the Windows Store.

Selecting Basic Print Settings - Windows
Selecting Double-sided Printing Settings - Windows
Selecting Additional Layout and Print Options - Windows
Selecting a Printing Preset - Windows
Selecting Extended Settings - Windows
Printing Your Document - Windows
Locking Printer Settings - Windows
Selecting Default Print Settings - Windows
Changing Automatic Update Options

Parent topic: Printing from a Computer

Selecting Basic Print Settings - Windows

Select the basic settings for the document or photo you want to print.

1. Open a photo or document for printing.
2. Select the print command in your application.

   Note: You may need to select a print icon on your screen, the **Print** option in the **File** menu, or another command. See your application's help utility for details.

3. If necessary, select your product name as the printer you want to use.

   Note: You may also need to select **Properties** or **Preferences** to view your print settings.

   You see the **Main** tab of your printer settings window:

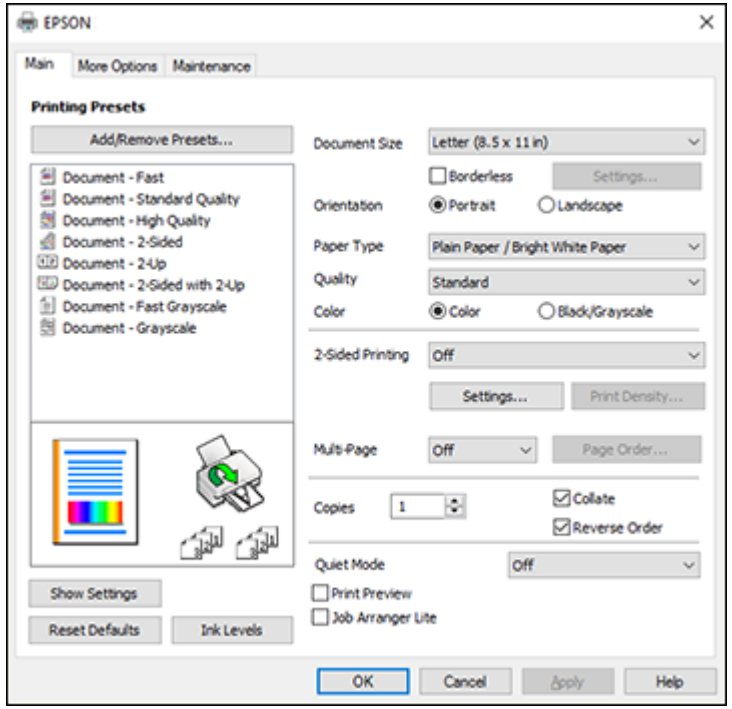

4. Select the size of the paper you loaded as the **Document Size** setting.

   Note: You can also select the **User-Defined** setting to create a custom paper size, but you cannot use the **Borderless** setting and the Quality setting will be set to **Standard**.

5. If you are printing a borderless photo, select **Borderless**. You can click **Settings** to access additional options for borderless printing.

   Note: You must select a compatible borderless paper type and size to print without borders. Check the borderless paper compatibility list for details.

6. Select the orientation of your document.

   Note: If you are printing an envelope, select **Landscape**.

7. Select the type of paper you loaded as the **Paper Type** setting.

   Note: The setting may not exactly match the name of your paper. Check the paper type settings list for details.

8. Select the **Quality** setting that matches the print quality you want to use.
9. Select a Color option:
   - To print a color document or photo, select the **Color** setting.
   - To print text and graphics in black or shades of gray, select the **Black/Grayscale** setting.
10. To print on both sides of the paper, select the **2-Sided Printing** setting and select the options you want.
11. To print multiple pages on one sheet of paper, or print one image on multiple sheets of paper, select one of the settings in the **Multi-Page** menu and select the printing options you want.
12. To print multiple copies and arrange their print order, select the **Copies** options.
13. To preview your job before printing, select **Print Preview**.
14. To save your print job as a project that can be modified and combined with other print jobs, select **Job Arranger Lite**.

15. To reduce noise during printing when you select **Plain Paper/Bright White Paper**, select **On** in the Quiet Mode menu.

    Note: Enabling **Quiet Mode** may reduce printing speed.

Print Quality Options - Windows

Multi-Page Printing Options - Windows

Parent topic: Printing with Windows

Related references

Paper or Media Type Settings - Printing Software

Related tasks

Selecting Double-sided Printing Settings - Windows

Print Quality Options - Windows

You can select any of the available Quality options to fine-tune the quality of your print. Some settings may be unavailable, depending on the paper type and border setting you have chosen.

Draft
For draft printing on plain paper.

Standard
For everyday text and image printing.

Standard - Vivid
For text and graphics with good quality and print speed.

High
For photos and graphics with high print quality.

More Settings
Opens a window that lets you choose among levels of speed and quality.

Parent topic: Selecting Basic Print Settings - Windows

Multi-Page Printing Options - Windows

You can select any of the available options in the Multi-Page menu to set up your multi-page print job.

2-Up and 4-Up
Prints 2 or 4 pages on one sheet of paper. Click the **Page Order** button to select page layout and border options.

2×1 Poster, 2×2 Poster, 3×3 Poster, 4×4 Poster
Prints one image on multiple sheets of paper to create a larger poster. Click the **Settings** button to select image layout and guideline options.

Parent topic: Selecting Basic Print Settings - Windows

Selecting Double-sided Printing Settings - Windows

You can print on both sides of the paper by selecting one of the **2-Sided Printing** options on the **Main** tab.

Note: Some options may be pre-selected or unavailable, depending on other settings you have chosen or if you are accessing the product over a network.

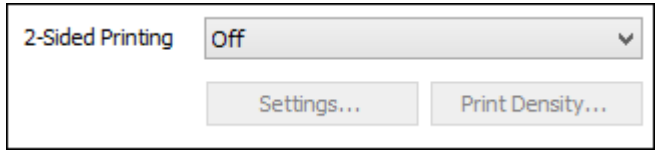

1. Select one of the following options for **2-Sided Printing**:
   - **Auto (Long-edge binding)** to print your double-sided print job by automatically flipping the paper on the long edge.
   - **Auto (Short-edge binding)** to print your double-sided print job by automatically flipping the paper on the short edge.
   - **Manual (Long-edge binding)** to print your double-sided print job by printing one side and prompting you to flip the paper over on the long edge to print the other side (recommended for paper types that do not support automatic duplexing).
   - **Manual (Short-edge binding)** to print your double-sided print job by printing one side and prompting you to flip the paper over on the short edge to print the other side (recommended for paper types that do not support automatic duplexing).
2. Click the **Settings** button.

You see this window:

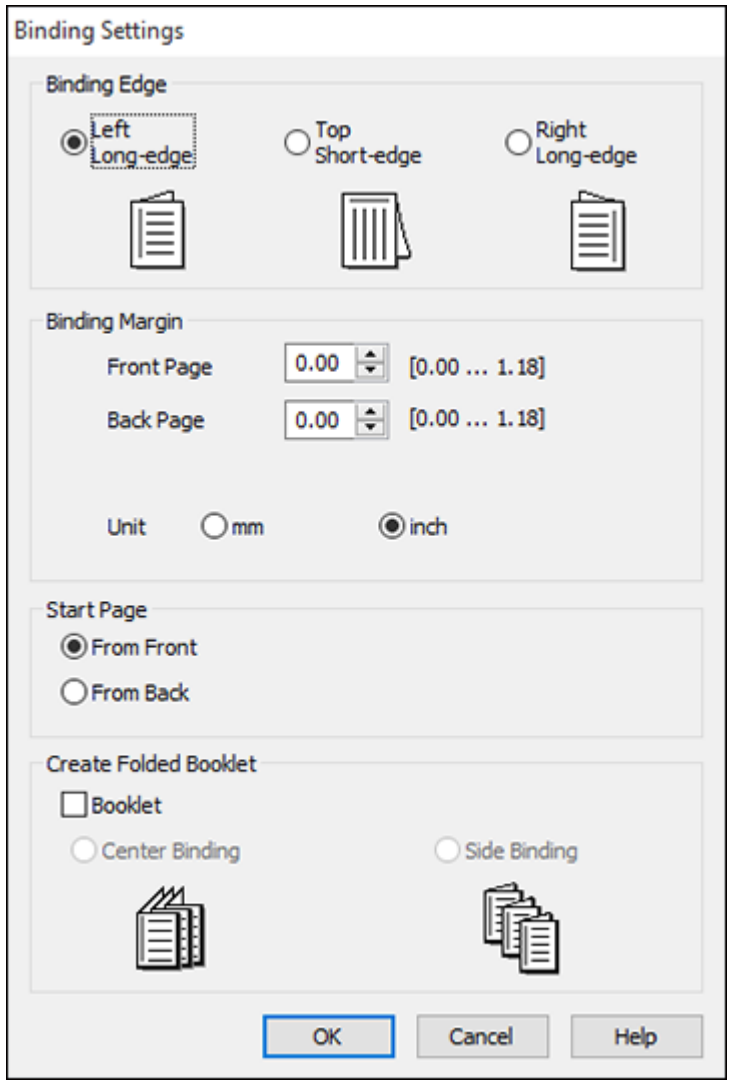

3. Select the double-sided printing options you want to use.
4. Click **OK** to return to the **Main** tab.

5. Click the **Print Density** button.

   You see this window:

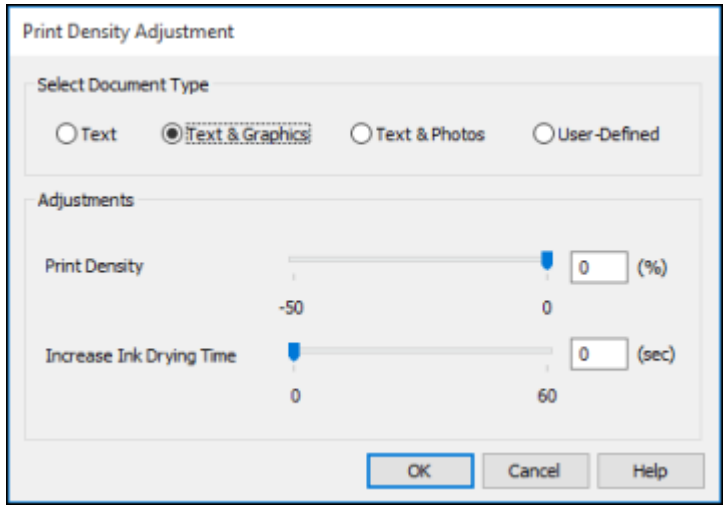

6. Select the type of document you are printing as the Document Type setting. The software automatically sets the **Adjustments** options for that document type.
7. If necessary, select the **Adjustments** options you want to use.
8. Click **OK** to return to the **Main** tab.
9. Print a test copy of your double-sided document to test the selected settings.
10. Follow any instructions displayed on the screen during printing.

Double-sided Printing Options - Windows
Print Density Adjustments - Windows

Parent topic: Printing with Windows

Related tasks

Selecting Basic Print Settings - Windows

Double-sided Printing Options - Windows

You can select any of the available options on the Binding Settings window to set up your double-sided print job.

Binding Edge Options
Select a setting that orients double-sided print binding in the desired direction.

Binding Margin Options
Select options that define a wider margin to allow for binding.

Start Page
Selects whether printing starts on the front or back page.

Create Folded Booklet Options
Select the **Booklet** checkbox and a binding option to print double-sided pages as a booklet.

Parent topic: Selecting Double-sided Printing Settings - Windows

Print Density Adjustments - Windows

You can select any of the available options on the Print Density Adjustment window to adjust the print quality of your double-sided print job.

Print Density
Sets the level of ink coverage for double-sided printing.

Increase Ink Drying Time
Sets the amount of time required for drying ink after printing on one side of the paper before printing the other side in double-sided printing to prevent ink smearing.

Parent topic: Selecting Double-sided Printing Settings - Windows

Selecting Additional Layout and Print Options - Windows

You can select a variety of additional layout and printing options for your document or photo on the **More Options** tab.

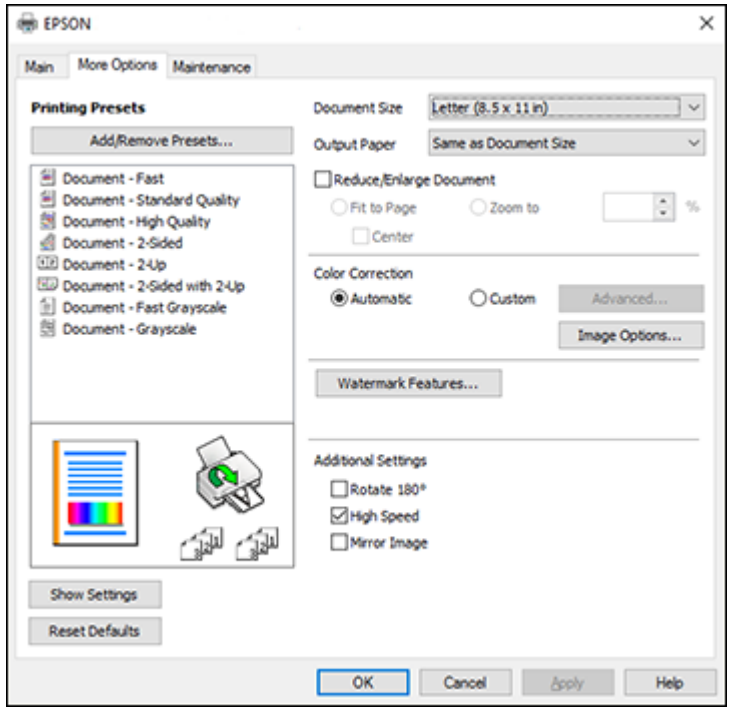

1. To change the size of your printed document or photo, select the **Reduce/Enlarge Document** checkbox and select one of these sizing options:
   - Select the **Fit to Page** option to size your image to fit the paper you loaded. Select the size of your document or photo as the **Document Size** setting, and the size of your paper as the **Output Paper** setting. If you want to center your image on the paper, select the **Center** option.
   - Select the **Zoom to** option to reduce or enlarge your document or photo by a specific percentage. Select the percentage in the **%** menu.
2. Select one of the following Color Correction options:
   - Select **Automatic** to automatically adjust the sharpness, brightness, contrast, and color saturation for your image.

- Select **Custom** and click the **Advanced** button to manually adjust the color correction settings or turn off color management in your printer software.
- Select **Image Options** to access additional settings for improving printed images.

  Note: You can also select **Color Universal Print** settings.

3. To add the following features, click the **Watermark Features** button:
   - **Anti-Copy Pattern**: adds a watermark that only appears when your printout is copied
   - **Watermark**: adds a visible watermark to your printout
   - **Header/Footer**: adds information such as the date and time to the top or bottom of your printout

     Note: Click the **Settings** button to customize the text and location of the header or footer.

4. Select any of the Additional Settings options to customize your print.

Custom Color Correction Options - Windows
Image Options and Additional Settings - Windows
Header/Footer Settings - Windows

Parent topic: Printing with Windows

Custom Color Correction Options - Windows

You can select any of the available options in the Color Correction window to customize the image colors for your print job.

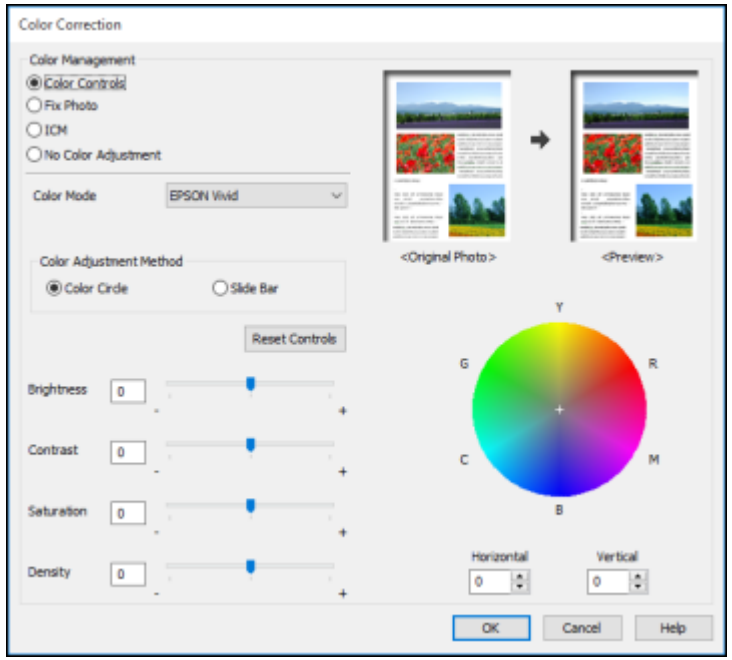

Color Controls

Lets you select a **Color Mode** setting, individual settings for **Brightness**, **Contrast**, **Saturation**, and **Density**, and individual color tones. Depending on the selected color mode, you can also adjust the midtone density using the **Gamma** setting.

Fix Photo

Improves the color, contrast, and sharpness of flawed photos.

Note: Fix Photo uses a sophisticated face recognition technology to optimize photos that include faces. For this to work, both eyes and the nose must be visible in the subject's face. If your photo includes a face with an intentional color cast, such as a statue, you may want to turn off **Fix Photo** to retain the special color effects.

ICM
Lets you manage color using installed color printing profiles.

No Color Adjustment
Turns off color management in your printer software so you can manage color using only your application software.

Parent topic: Selecting Additional Layout and Print Options - Windows

Image Options and Additional Settings - Windows

You can select any of the Image Options and Additional Settings to customize your print. Some options may be pre-selected or unavailable, depending on other settings you have chosen.

Image Options

Emphasize Text
Adjusts the weight of printed text to increase readability.

Emphasize Thin Lines
Adjusts the weight of printed lines to increase visibility.

Edge Smoothing
Smooths jagged edges in low-resolution images such as screen captures or images from the Web.

Fix Red-Eye
Reduces or removes red-eye in photos.

Print Text in Black
Prints colored text in black.

For Color Text
Prints colored text on a background pattern or underlined.

For Color Graphs and Images
Prints colored graphics and images with overlay patterns.

For Color Text, Graphs, and Images
Prints colored text, graphics, and images with overlay patterns.

Enhancement Options
Specifies Color Universal Print enhancement settings for text, graphics, and images.

Additional Settings Options

Rotate 180º
Prints the image rotated 180º from its original orientation.

High Speed
Speeds up printing but may reduce print quality.

Mirror Image
Flips the printed image left to right.

Parent topic: Selecting Additional Layout and Print Options - Windows

Header/Footer Settings - Windows

You can select any of the Header/Footer Settings options to add headers or footers when you print. The items are available to print at the top or bottom of your pages, in either the left, right, or center of the page.

Note: These settings are not saved with your document.

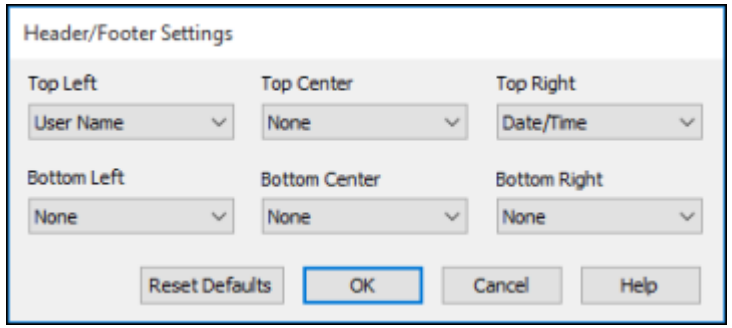

You can select to print the following information:

- User Name
- Computer Name
- Date
- Date/Time
- Document Name
- Collate Number (copy number)

Note: The user name, computer name, date, and time come from the Windows Control Panel on your computer.

Parent topic: Selecting Additional Layout and Print Options - Windows

Selecting a Printing Preset - Windows

For quick access to common groups of print settings, you can select a printing preset on the **Main** or **More Options** tab.

Note: You can create your own preset by clicking the **Add/Remove Presets** button.

1. Click the **Main** or **More Options** tab.

   You see the available **Printing Presets** on the left:

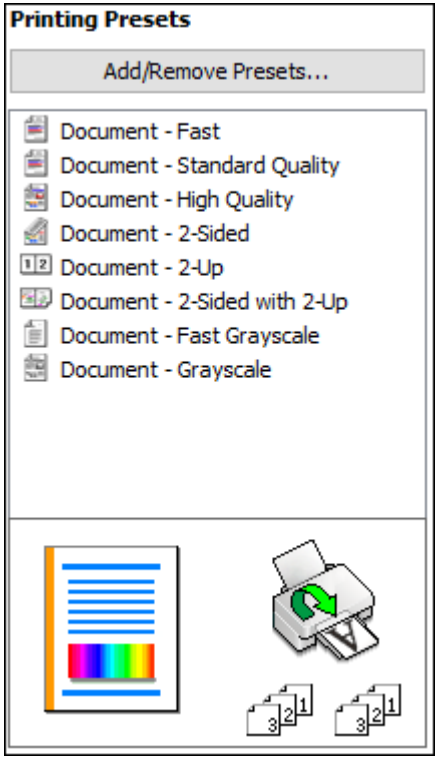

2. Place your cursor over one of the **Printing Presets** to view its list of settings.

3. Click on a preset to change its settings, or use any of the available options on the screen to control your printing presets.
4. To choose a preset for printing, select it.
5. Click **OK**.

Parent topic: Printing with Windows

Selecting Extended Settings - Windows

You can select additional settings that apply to all the print jobs you send to your product.

1. Access the Windows Desktop and right-click the icon for your product in the right side of the Windows taskbar, or click the up arrow and right-click .
2. Select **Printer Settings**.
3. Click the **Maintenance** tab.

   You see the maintenance options:

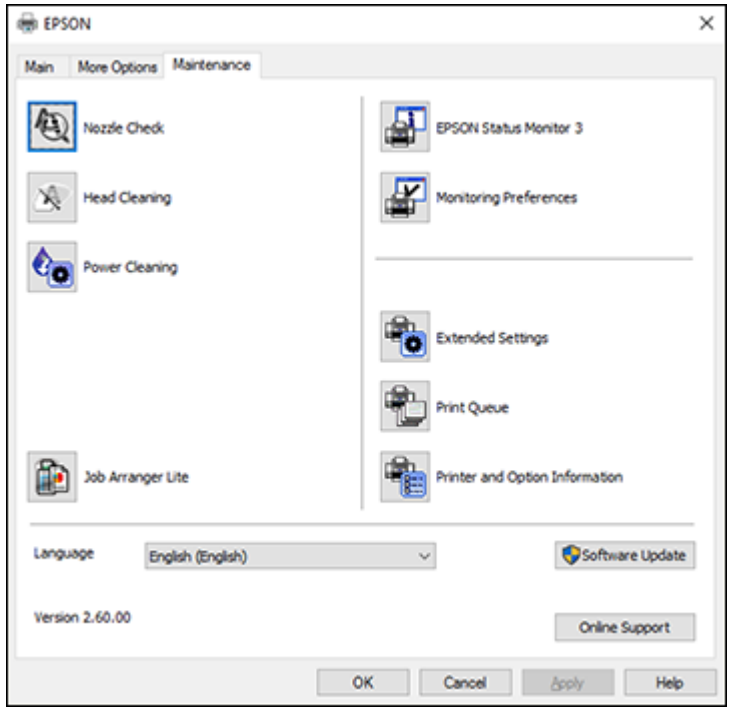

4. Click the **Extended Settings** button.

   You see this window:

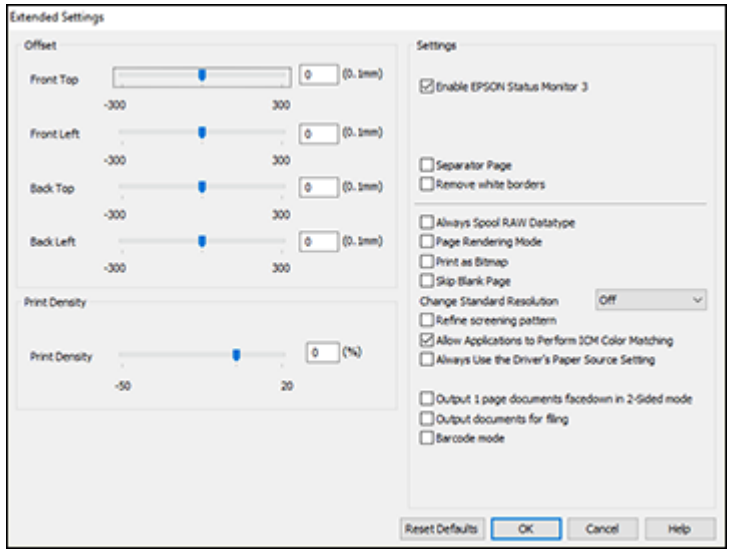

5. Select any of the extended settings to customize your print.
6. Click **OK** to close the Extended Settings window.
7. Click **OK** to close the printer software window.

Extended Settings - Windows

Parent topic: Printing with Windows

Extended Settings - Windows

You can select from these settings on the Extended Settings window.

Enable EPSON Status Monitor 3
Enables product monitoring for ink and paper supplies and other issues.

Separator Page
Before each document, prints a separator page containing the title, user, date, and time.

Remove white borders
Removes white margins that may appear when you print borderless photos.

Always Spool RAW Datatype
Increases print speed and may solve other printing problems.

Page Rendering Mode
Increases print speed when printing is extremely slow or the print head stops during printing.

Print as Bitmap
Increases print speed when printing is extremely slow or the print head stops during printing, and other settings do not help.

Skip Blank Page
Ensures that your product does not print pages that contain no text or images.

Change Standard Resolution
Reduces the resolution of print data to correct printing problems.

Refine screening pattern
Prints graphics with a finer screening pattern.

Allow Applications to Perform ICM Color Matching
Allows applications to perform ICM color matching.

Always Use the Driver's Paper Source Setting
Prints using the paper source setting in the printer driver, rather than the setting in your application.

Output 1 page documents facedown in 2-Sided mode
Outputs single-sided pages in a 2-sided print job facedown instead of faceup.

Output documents for filing
Outputs all landscape, portrait, 1-sided, and 2-sided documents in the same orientation for easier filing.

Barcode mode
Reduces bleeding when printing barcodes on plain paper, letterhead paper, recycled paper, preprinted paper, envelopes, and thick paper.

Parent topic: Selecting Extended Settings - Windows

Printing Your Document - Windows

Once you have selected your print settings, you are ready to save your settings and print.

1. Click **OK** to save your settings.

You see your application's Print window, such as this one:

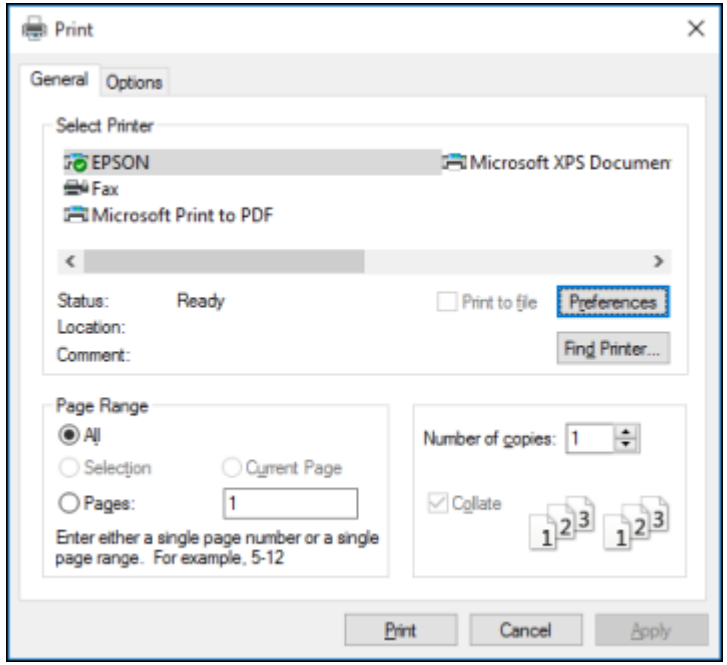

2. Click **OK** or **Print** to start printing.

Parent topic: Printing with Windows

Locking Printer Settings - Windows

Windows administrators can lock access to some printer settings to prevent unauthorized changes.

1. Do one of the following:
   - **Windows 10:** Click and select (Settings) > **Devices** > **Printers & scanners**. Select your product name and select **Manage** > **Printer properties**.
   - **Windows 8.x:** Navigate to the **Apps** screen and select **Control Panel** > **Hardware and Sound** > **Devices and Printers**. Right-click your product and select **Printer properties**.
   - **Windows 7:** Click and select **Devices and Printers**. Right-click your product and select **Printer properties**.

- **Windows Vista:** Click and select **Control Panel**. Click **Printer** under **Hardware and Sound**, then right-click your product and select **Properties**.

2. Click the **Optional Settings** tab.

   Note: You can prevent access to the **Optional Settings** tab by changing the user or group permissions in the **Security** tab.

3. Click **Driver Settings**.

   You see this window:

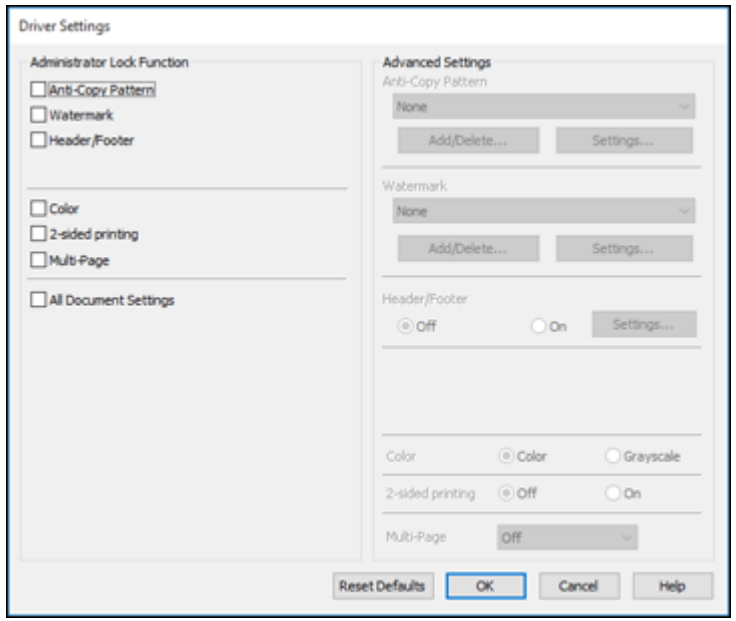

4. Select the checkbox for each setting you want to lock. To lock all print settings, select **All Document Settings**.
5. Under **Advanced Settings**, select the setting option you want to use for each locked setting.
6. Click **OK**.

Locked Setting Options

Parent topic: Printing with Windows

Locked Setting Options

Select the options you want to use for any locked print settings.

Setting	Options	Description
Anti-Copy Pattern	Various data items	Lets you select the data to use for the pattern or prohibit anti-copy patterns
	Add/Delete	Lets you add or delete a customized anti-copy pattern
	Settings	Lets you select the arrangement, size, and other settings for the custom anti-copy pattern
Watermark	Various text watermarks	Lets you select the text for the watermark or prohibit watermarks
	Add/Delete	Lets you add or delete a customized text or image-based watermark
	Settings	Lets you select the size, position, and other watermark settings
Header/Footer	**Off**	Prohibits headers or footers
	On	Allows headers and footers
	Settings	Lets you select the text and position for printing headers and footers
Color	**Color**	Allows color printing
	Grayscale	Allows printing in black or shades of gray only
2-sided printing	**Off**	Allows printing on one side of the paper only
	On	Allows printing on both sides of the paper
Multi-Page	**Off**	Prohibits multi-page settings
	2-Up	Allows printing of 2 pages on one sheet of paper
	4-Up	Allows printing of 4 pages on one sheet of paper

Parent topic: Locking Printer Settings - Windows

Selecting Default Print Settings - Windows

When you change your print settings in a program, the changes apply only while you are printing in that program session. If you want to change the print settings you use in all your Windows programs, you can select new default print settings.

1. Access the Windows Desktop and right-click the icon for your product in the right side of the Windows taskbar, or click the up arrow and right-click .
2. Select **Printer Settings**.

   You see the printer settings window:

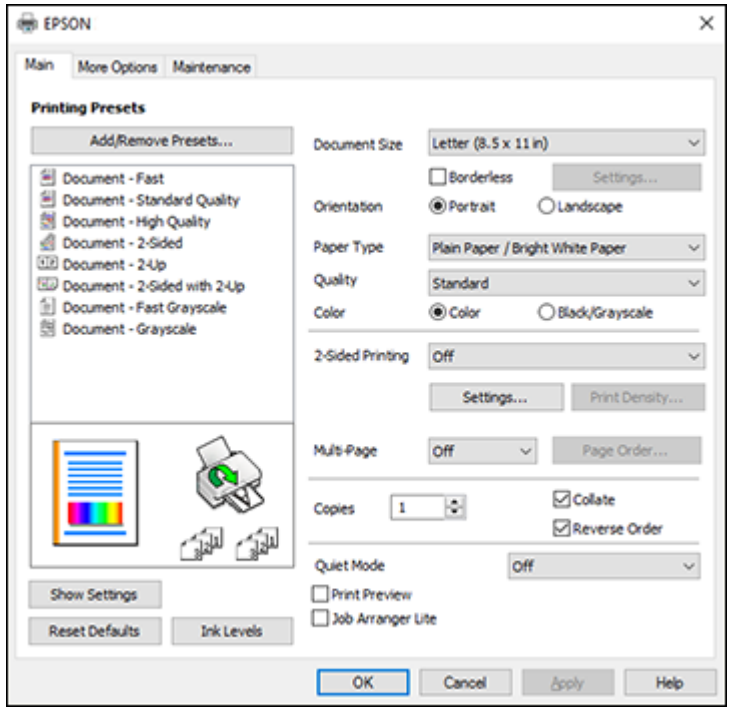

3. Select the print settings you want to use as defaults in all your Windows programs.
4. Click **OK**.

These settings are now the defaults selected for printing. You can still change them as needed for printing in any program session.

Changing the Language of the Printer Software Screens

Parent topic: Printing with Windows

Changing the Language of the Printer Software Screens

You can change the language used on the Windows printer software screens.

1. Access the Windows Desktop and right-click the icon for your product in the right side of the Windows taskbar, or click the up arrow and right-click .
2. Select **Printer Settings**.

   You see the printer settings window.
3. Click the **Maintenance** tab.

   You see the maintenance options:

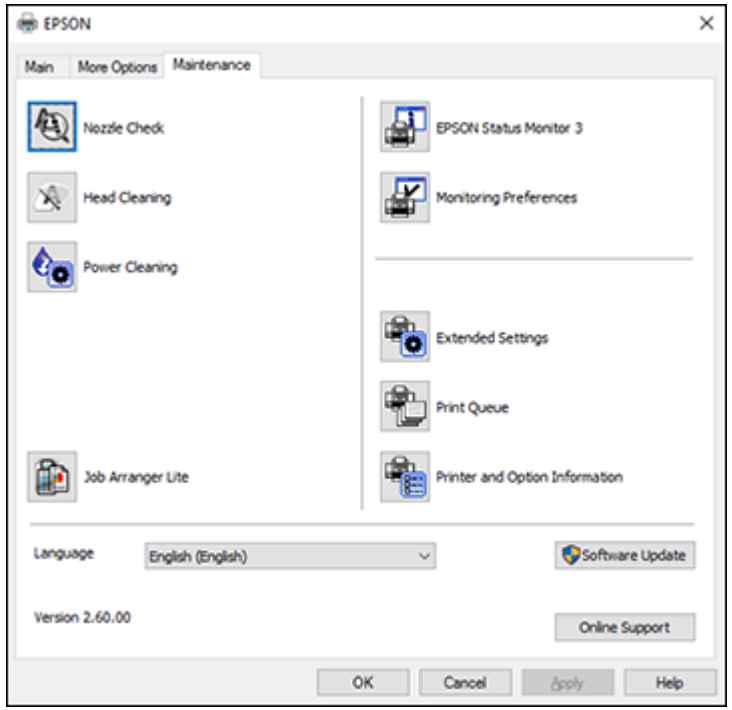

4. Select the language you want to use as the **Language** setting.

5. Click **OK** to close the printer software window.

The printer software screens appear in the language you selected the next time you access them.

Parent topic: Selecting Default Print Settings - Windows

Changing Automatic Update Options

Your printer software for Windows automatically checks for updates to the product software. You can change how often the software checks for updates or disable this feature.

1. Access the Windows Desktop and right-click the icon for your product in the right side of the Windows taskbar, or click the up arrow and right-click .
2. Select **Software Update Settings**.

   You see this window:

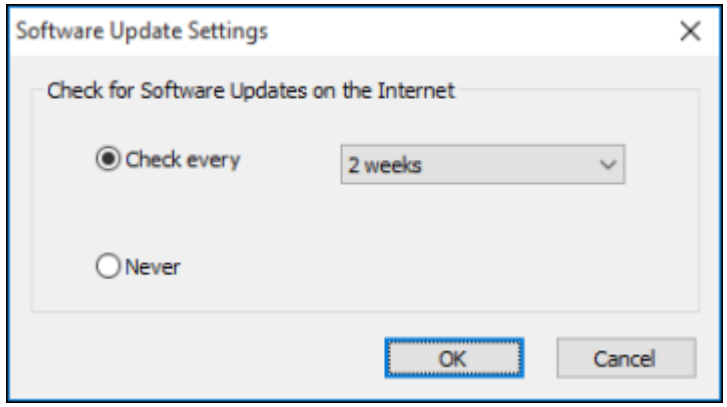

3. Do one of the following:
   - To change how often the software checks for updates, select a setting in the **Check every** menu.
   - To disable the automatic update feature, select the **Never** option.
4. Click **OK** to exit.

Note: If you choose to disable the automatic update feature, you can check for updates manually.

Parent topic: Printing with Windows

Printing with the Built-in Epson Driver - Windows 10 S

You can print with the built-in Epson printer driver using any printing program on Windows 10 S, as described in these sections.

Note: The built-in Epson driver in Windows 10 S does not include all the available print settings for your product. To print with additional settings, download and install the Epson Print and Scan utility from the Windows Store. You cannot download and install any Epson product software from the Epson website for use with Windows 10 S; you must obtain software only from the Windows Store.

Selecting Print Settings - Windows 10 S

Parent topic: Printing from a Computer

Selecting Print Settings - Windows 10 S

Select the settings for your print job in your Windows 10 S application.

1. Open a photo or document for printing.
2. Select the print command in your application.

   Note: You may need to select a print icon on your screen, the **Print** option in the **File** menu, or another command. See your application's help utility for details.

3. If necessary, select your product name as the printer you want to use.

   Note: You may also need to select **Properties** or **Preferences** to view your print settings.

You see a window like this:

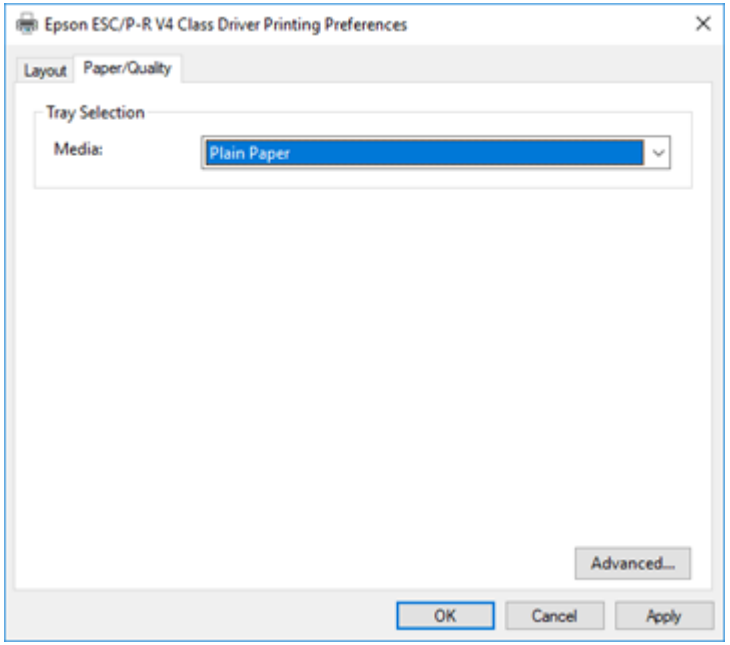

4. Select the type of paper you loaded as the **Media** setting.

   Note: The setting may not exactly match the name of your paper. Check the paper type settings list for details.

5. Click the **Advanced** button.

You see a window like this:

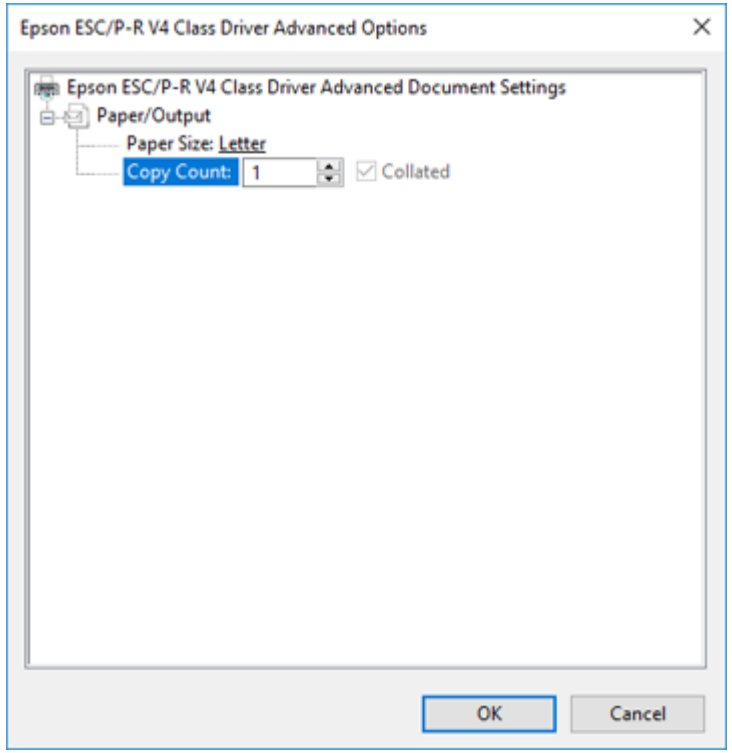

6. Select the size of the paper you loaded as the **Paper Size** setting.
7. To print multiple copies, select or enter the number as the **Copy Count** setting.
8. To print multiple copies of multi-page documents in sets, select the **Collated** checkbox.
9. Click **OK**.

   You return to the printing preferences window.

10. Select the **Layout** tab.

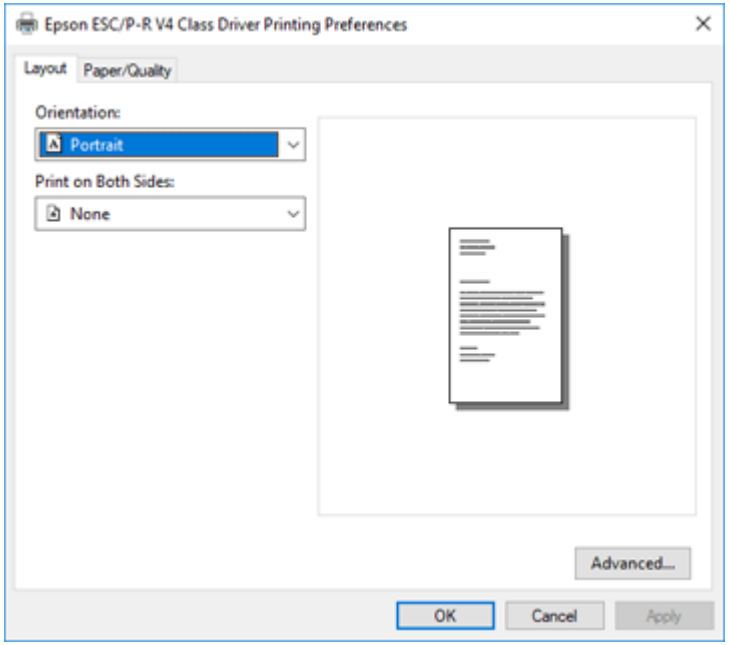

11. Select the orientation of your document as the **Orientation** setting.

12. To print double-sided, select one of the **Print on Both Sides** options, depending on how you want to orient the page layout. The icon next to each option shows the layout.

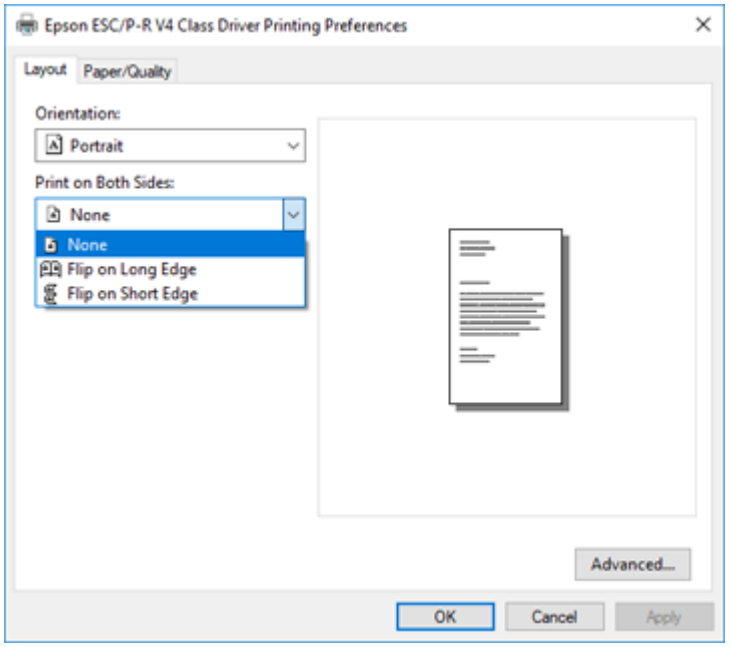

13. Click **OK** to save your settings.

    You see your application's **Print** window.

14. Click **OK** or **Print** to start printing.

Parent topic: Printing with the Built-in Epson Driver - Windows 10 S

Printing on a Mac

You can print with your product using any Mac printing program, as described in these sections.

Note: If you have an Internet connection, it is a good idea to check for updates to your product software on Epson's support website.

Selecting Basic Print Settings - Mac

Selecting Page Setup Settings - Mac

Selecting Print Layout Options - Mac
Selecting Double-sided Printing Settings - Mac
Managing Color - Mac
Selecting Printing Preferences - Mac
Printing Your Document or Photo - Mac

Parent topic: Printing from a Computer

Selecting Basic Print Settings - Mac

Select the basic settings for the document or photo you want to print.

1. Open a photo or document for printing.
2. Select the print command in your application.

   Note: You may need to select a print icon on your screen, the **Print** option in the File menu, or another command. See your application's help utility for details.

3. Select your product as the **Printer** setting.

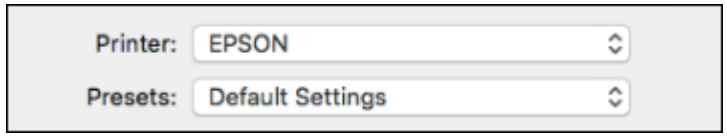

4. If necessary, click the arrow next to the Printer setting or the **Show Details** button to expand the print window.

You see the expanded printer settings window for your product:

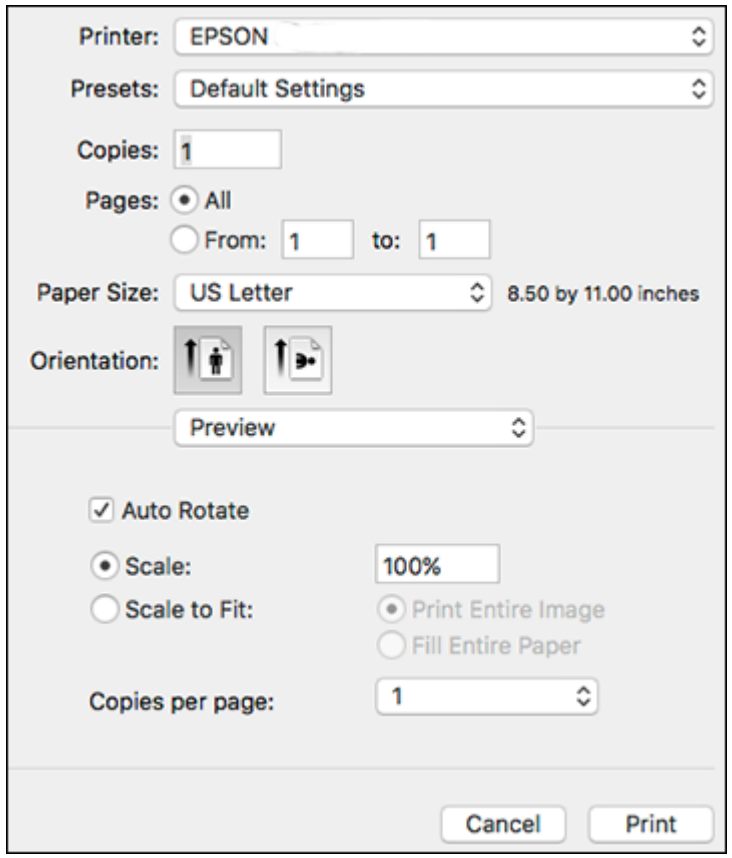

Note: The print window may look different, depending on the Mac OS version and the application you are using.

5. Select the **Copies** and **Pages** settings as necessary.

   Note: If you do not see these settings in the print window, check for them in your application before printing.

6. Select the page setup options: **Paper Size** and **Orientation**.

   Note: If you do not see these settings in the print window, check for them in your application before printing. They may be accessible by selecting **Page Setup** from the File menu.

7. Select any application-specific settings that appear on the screen, such as those shown in the image above for the Preview application.
8. Select **Print Settings** or **Printer Features** from the pop-up menu.

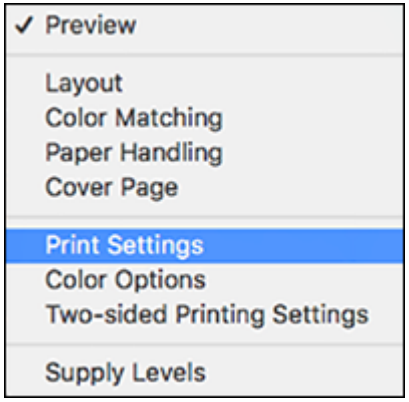

You see these settings:

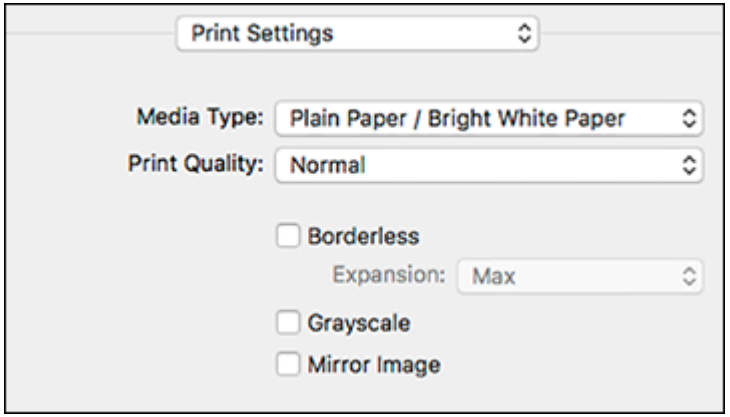

9. Select the type of paper you loaded as the **Media Type** setting.

   Note: The setting may not exactly match the name of your paper. Check the paper type settings list for details.

10. Select the **Print Quality** setting you want to use.
11. Select the **Borderless** checkbox if you want to print a borderless photo. If the option is grayed out, change the **Media Type** setting to a paper type that supports borderless printing.
12. Select any of the available print options.

Print Quality Options - Mac
Print Options - Mac

Parent topic: Printing on a Mac

Related tasks

Selecting Page Setup Settings - Mac
Printing Your Document or Photo - Mac

Print Quality Options - Mac

You can select any of the available Print Quality options to fine-tune the quality of your print. Some settings may be unavailable, depending on the paper type setting you have chosen.

Draft
For draft printing on plain paper.

Normal
For everyday text and image printing.

Normal - Vivid
For everyday text and image printing with good quality and print speed.

Quality
For text and graphics with increased quality and print speed.

Best Quality
For the best print quality, but the slowest print speed.

Parent topic: Selecting Basic Print Settings - Mac

Print Options - Mac

You can select any of the print options to customize your print. Some options may be unavailable, depending on other settings you have chosen.

Expansion
If you selected a borderless paper size setting, this option adjusts the image expansion settings to control printing at the edges of borderless prints.

Grayscale
Prints text and graphics in black or shades of gray.

Mirror Image
Lets you flip the printed image horizontally.

Note: If you select the **Min** option for the Expansion setting, you may see white borders on your printed photo.

Parent topic: Selecting Basic Print Settings - Mac

Selecting Page Setup Settings - Mac

Depending on your application, you may be able to select the paper size and orientation settings from the print window.

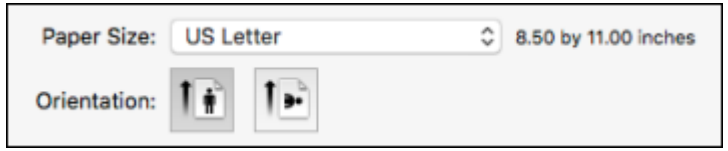

Note: If you do not see these settings in the print window, check for them in your application before printing. They may be accessible by selecting **Page Setup** from the File menu.

1. Select the size of the paper you loaded as the **Paper Size** setting. If you are printing a borderless photo, select the **Borderless** checkbox or a paper size with a **Borderless** option. You can also select a custom setting to create a custom paper size, but the Quality setting will be limited to **Normal**.

   Note: You must select a compatible borderless paper type and size to print without borders. Check the borderless paper compatibility list for details.

2. Select the orientation of your document or photo as shown in the print window.

   Note: If you are printing an envelope, select the icon.

Note: You can reduce or enlarge the size of the printed image by selecting **Paper Handling** from the pop-up menu and selecting a scaling option.

Parent topic: Printing on a Mac

Selecting Print Layout Options - Mac

You can select a variety of layout options for your document or photo by selecting **Layout** from the pop-up menu on the print window.

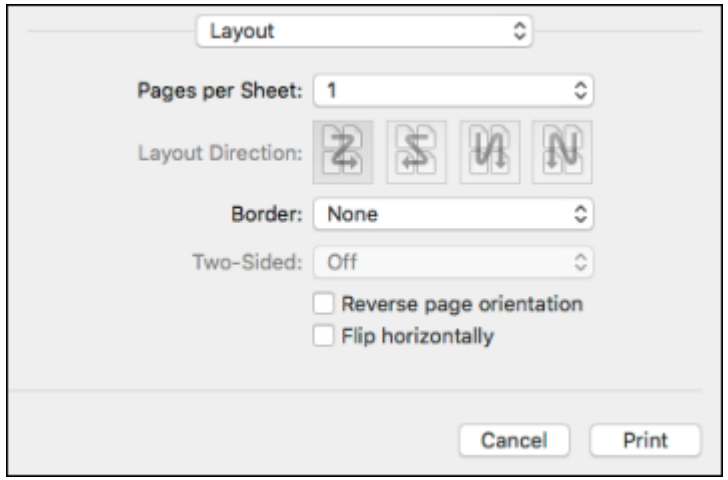

- To print multiple pages on one sheet of paper, select the number of pages in the **Pages per Sheet** pop-up menu. To arrange the print order of the pages, select a **Layout Direction** setting.
- To print borders around each page on the sheet, select a line setting from the **Border** pop-up menu.
- To print on both sides of each page, select a setting from the **Two-Sided** pop-up menu.
- To invert or flip the printed image, select the **Reverse page orientation** or **Flip horizontally** settings.

Parent topic: Printing on a Mac

Selecting Double-sided Printing Settings - Mac

You can print on both sides of the paper by selecting **Two-sided Printing Settings** from the pop-up menu on the print window.

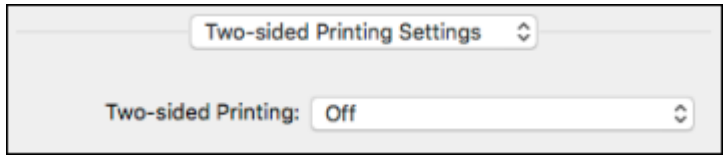

Note: Some options may be pre-selected or unavailable, depending on other settings you have chosen or if you are accessing the product over a network. This screen may be different, depending on the Mac OS version you are using.

1. Select one of the **Two-sided Printing** options.

2. Select the type of document you are printing as the **Document Type** setting. The software automatically sets the Adjustments options for that document type.

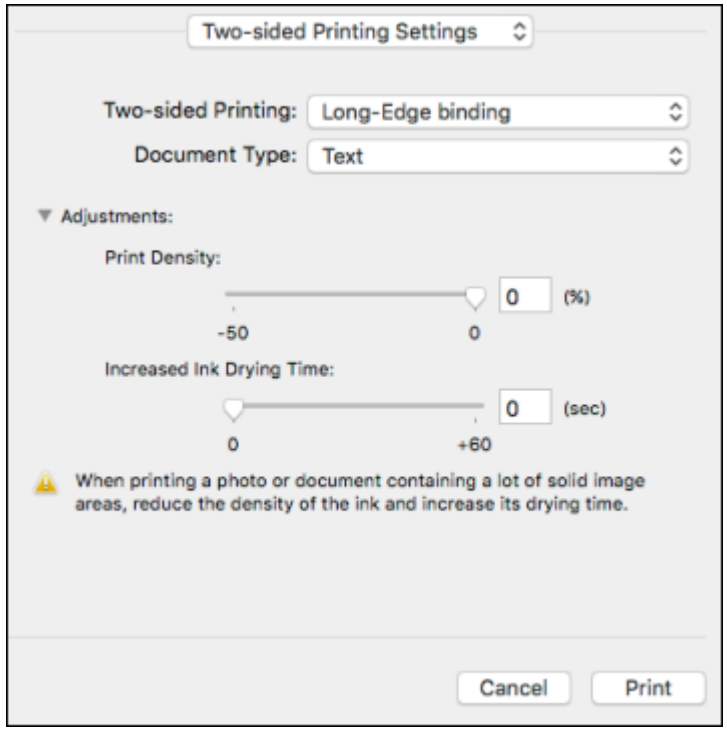

3. If necessary, customize the Adjustments settings as instructed on the screen.
4. Print a test copy of your double-sided document to test the selected settings.
5. Follow any instructions displayed on the screen during printing.

Double-sided Printing Options and Adjustments - Mac

Parent topic: Printing on a Mac

Double-sided Printing Options and Adjustments - Mac

You can select any of the available options in the **Two-sided Printing Settings** pop-up menu to set up your double-sided print job.

Long-Edge binding

Orients double-sided printed pages to be bound on the long edge of the paper.

Short-Edge binding
Orients double-sided printed pages to be bound on the short edge of the paper.

Print Density
Sets the level of ink coverage for double-sided printing.

Increased Ink Drying Time
Sets the amount of time required for drying ink after printing on one side of the paper before printing the other side in double-sided printing.

Parent topic: Selecting Double-sided Printing Settings - Mac

Managing Color - Mac

You can adjust the Color Matching and Color Options settings to fine-tune the colors in your printout, or turn off color management in your printer software.

1. Select **Color Matching** from the pop-up menu in the print window.

2. Select one of the available options.
3. Select **Color Options** from the pop-up menu in the print window.

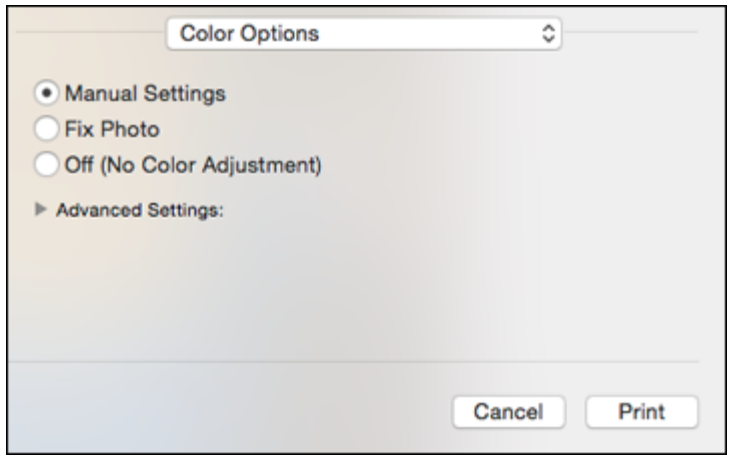

Note: The available settings on the Color Options menu depend on the option you selected on the Color Matching menu.

4. Select one of the available options.

Color Matching and Color Options - Mac

Parent topic: Printing on a Mac

Color Matching and Color Options - Mac

You can select from these settings on the **Color Matching** and **Color Options** menus.

Color Matching Settings

EPSON Color Controls
Lets you manage color using controls in your printer software or turn off color management.

ColorSync
Prints using standard color profiles for your product and paper to help match image colors. You can customize the conversion method and filter settings on the ColorSync pop-up menu in the print window.

Color Options Settings

Manual Settings
Lets you select manual color adjustments. Click the arrow next to **Advanced Settings** and select settings for **Brightness**, **Contrast**, **Saturation**, and individual color tones. You can also select a color **Mode** setting for printing photos and graphics and the **Fix Red-Eye** setting to reduce or remove red-eye in photos. Depending on the selected color mode, you can also adjust the midtone density using the **Gamma** setting.

Fix Photo
Improves the color, contrast, and sharpness of flawed photos. Click the arrow next to **Advanced Settings** and select the **Fix Red-Eye** setting to reduce or remove red-eye in photos.

Note: Fix Photo uses a sophisticated face recognition technology to optimize photos that include faces. For this to work, both eyes and the nose must be visible in the subject's face. If your photo includes a face with an intentional color cast, such as a statue, you may want to turn off **Fix Photo** to retain the special color effects.

Off (No Color Adjustment)
Turns off color management in your printer software so you can manage color using only your application software.

Note: An ICC profile is required if color management is turned off.

Parent topic: Managing Color - Mac

Selecting Printing Preferences - Mac

You can select printing preferences that apply to all the print jobs you send to your product.

1. In the Apple menu or the Dock, select **System Preferences**.
2. Select **Print & Fax**, **Print & Scan**, or **Printers & Scanners**, select your product, and select **Options & Supplies**.
3. Select **Driver** or **Options**.

   You see a screen like this:

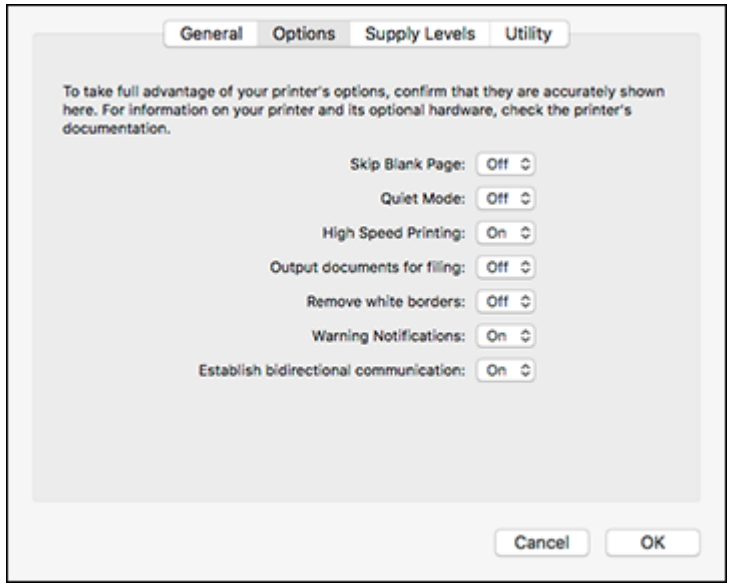

4. Select any of the available printing preferences.
5. Click **OK**.

Printing Preferences - Mac

Parent topic: Printing on a Mac

Printing Preferences - Mac

You can select from these settings on the **Options** or **Driver** tab.

Skip Blank Page
Ensures that your product does not print pages that contain no text or images.

Quiet Mode
Lessens noise during printing but may decrease print speed.

High Speed Printing
Speeds up printing but may reduce print quality.

Output documents for filing
Outputs all landscape, portrait, 1-sided, and 2-sided documents in the same orientation for easier filing.

Remove white borders
Removes white margins that may appear when you print borderless photos.

Warning Notifications
Lets you choose whether or not to receive warning notifications from the printer software for various operating conditions.

Establish bidirectional communication
Allows the product to communicate with the computer. Do not change the default setting unless you experience issues when using a shared printing pool.

Parent topic: Selecting Printing Preferences - Mac

Printing Your Document or Photo - Mac

Once you have selected your print settings, you are ready to print.

Click **Print** at the bottom of the print window.

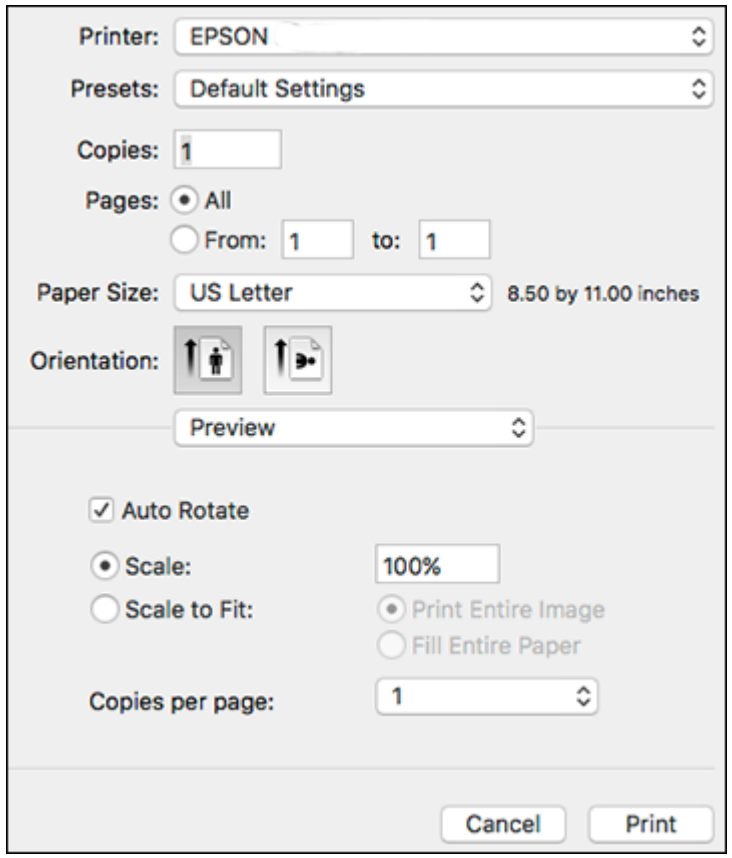

Checking Print Status - Mac

Parent topic: Printing on a Mac

Related tasks

Selecting Basic Print Settings - Mac
Selecting Page Setup Settings - Mac
Selecting Print Layout Options - Mac
Selecting Double-sided Printing Settings - Mac
Managing Color - Mac

Selecting Printing Preferences - Mac

Checking Print Status - Mac

During printing, you can view the progress of your print job, control printing, and check ink status.

1. Click the printer icon when it appears in the Dock.

   You see the print status window:

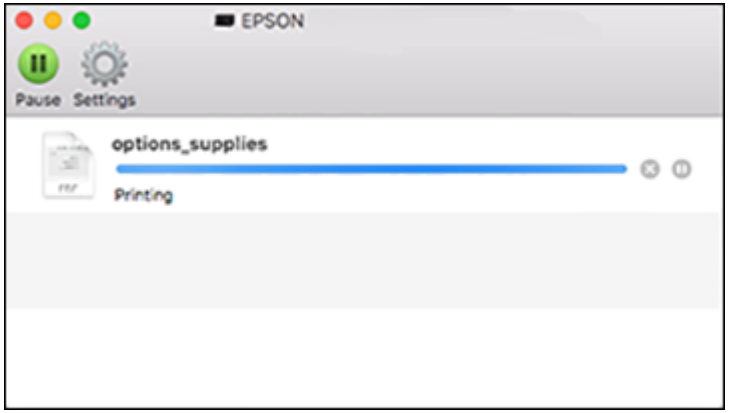

2. Select the following options as necessary for your Mac OS version:
   - To cancel printing, click the print job and click or **Delete**.
   - To pause a print job, click the print job and click or **Hold**. To resume a print job, click the paused print job and click or **Resume**.
   - To pause printing for all queued print jobs, click **Pause** or **Pause Printer**.
   - To display other printer information, click **Settings** or **Supply Levels**.

Parent topic: Printing Your Document or Photo - Mac

Printing From a Chromebook

With a Google Account, you can print from a Chromebook without drivers or cables.

1. Connect your Epson product to your wireless network. See the link below.

2. Turn on your Chromebook and connect it to the same wireless network as your product.

   Note: See your Chromebook's documentation for details on connecting to a network.

3. Do one of the following:
   - Click **Add to Cloud Print** in the notification that appears in the corner of your Chromebook screen.

     Note: If you do not see a notification, check to see if a number appears in the status area at the lower-right corner of the screen. Click this number to open the notifications menu, then click **Add to Cloud Print**.

   - Open a web browser and enter **chrome://devices** in the address bar. Skip to step 4.
   - If you see a registration confirmation screen instead, click **Register**.
4. Click **Add Device**.
5. Click the **Register** button that appears next to your product.
6. Click **Register** on the confirmation screen. Your product's LCD screen displays a confirmation message.
7. Select **OK** or press the **OK** button on your product to confirm the Google Cloud Print connection and print a test page.
8. To print to the connected product, select the print command in your Chrome app.

Your product is now linked to your Google Account and can be accessed from any Chromebook where you are logged in, as long as you have Internet access. Visit Epson Support for Google Cloud Print (U.S) or Epson Support for Google Cloud Print (Canada) for more information on using Google Cloud Print, or the Google Cloud Print website for a list of supported apps.

Parent topic: Printing from a Computer

Cancelling Printing Using the Product

If you need to cancel printing, select **Cancel**, then select **Cancel** again to confirm.

Parent topic: Printing from a Computer

Scanning

You can scan your originals and save them as digital files.

Starting a Scan
Scanning in Epson Scan 2

Starting a Scan

After placing your originals on your product for scanning, start scanning using one of these methods.

Starting a Scan Using the Product Control Panel
Starting a Scan Using the Epson Scan 2 Icon
Starting a Scan from a Scanning Program
Starting a Scan from a Smart Device

Parent topic: Scanning

Related topics

Placing Originals on the Product

Starting a Scan Using the Product Control Panel

You can scan an image to a variety of destinations uing your product's control panel.

1. Make sure you installed the product software and connected the product to your computer or network.

   Note: Restart your computer after installing the product software to enable scanning from the control panel.

2. Place your original on the product for scanning.
3. Press the ⌂ home button, if necessary.
4. Select **Scan**.

You see a screen like this:

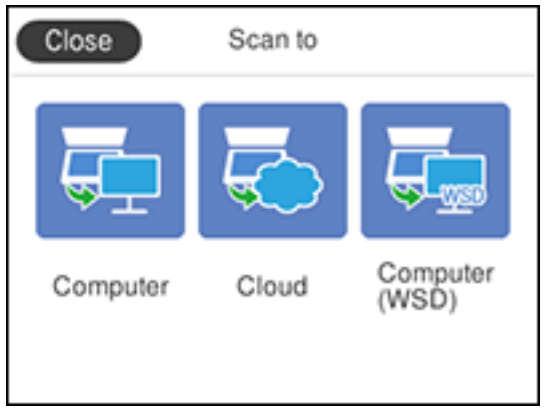

5. Select one of the following **Scan to** options:
   - **Computer** lets you scan to a connected computer using your saved scan settings.
   - **Cloud** sends your scanned files to a destination that you have registered with Epson Connect.
   - **Computer (WSD)** lets you manage network scanning in Windows 10, Windows 8.x, Windows 7, or Windows Vista (English only). To use this feature, you must first set up a WSD (Web Services for Devices) port on your Windows 7 or Windows Vista computer (the port is set up automatically on Windows 10 and Windows 8.x).
6. Follow the instructions in the links below to complete your scan.

Scanning to a Connected Computer
Control Panel Scanning Options
Changing Default Scan Job Settings
Setting Up a WSD Port (Windows 7/Windows Vista)

Parent topic: Starting a Scan

Related tasks

Using Epson Scan to Cloud

Scanning to a Connected Computer

You can scan an original and save it to a connected computer using your product's control panel. The computer must be connected using a USB cable or connected to the same network as your product.

You can save the scanned file as a JPEG or PDF file, or attach it to an email. You can also set up custom scan settings using Event Manager and automatically scan using those settings on your product control panel.

Note: Be sure you have installed Epson Scan 2 and Event Manager on your computer before scanning to your computer.

1. Place your original on the product for scanning.
2. Press the ⌂ home button, if necessary.
3. Select **Scan**.

   You see a screen like this:

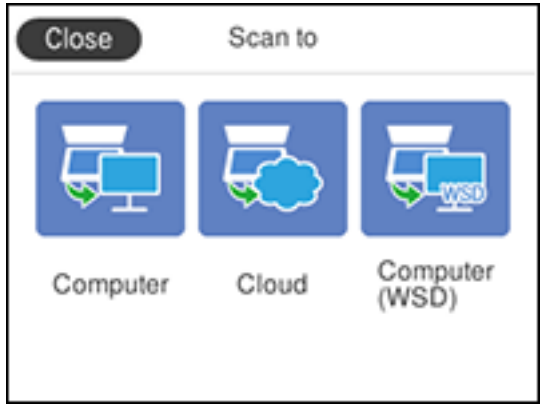

4. Select **Computer**.

You see a screen like this:

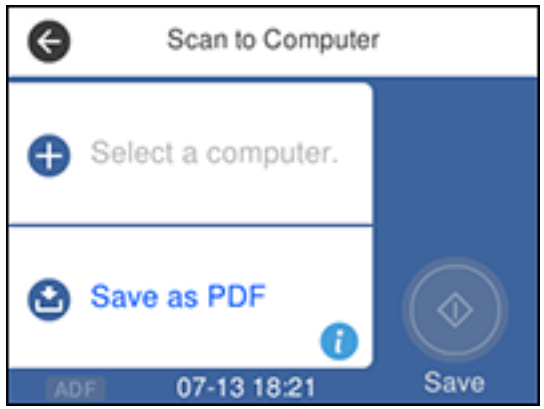

5. Select **OK** to close the information screen, if necessary.
6. Select **Select a computer** and choose one of the following options:
   - If your computer is connected to your product over a network, select a connected computer from the displayed list. (If the computer is not listed, select **Search Again**.)
   - If you computer is connected to your product using a USB cable, select **USB Connection**.
7. Select **Save as PDF** and choose one of the following options:
   - **Save as JPEG** to save the scanned scanned image as a JPEG file.
   - **Save as PDF** to save the scanned document or image as a PDF file.
   - **Attach to email** to open the default email software on your computer and save the scanned document or images as an email attachment.
   - **Follow custom setting** to save the scanned document or image using custom settings you have selected using the Event Manager custom scan settings option.

   Note: You can customize the settings for each of these options using Event Manager.

8. Select **Save** to start scanning.

Parent topic: Starting a Scan Using the Product Control Panel

Related tasks

Changing Default Scan Job Settings

Control Panel Scanning Options

Select the options you want to use for scanning.

Note: Not all options or settings may be available, depending on the **Scan to** option selected.

Scan to setting	Available options	Description
Color mode	**Color**	Select whether to scan images in color or black and white
	B&W	
File format	**JPEG**	Select for photos
	PDF	Select for documents
Scan Area	**Letter**	Select the page size for documents, then select the orientation of the original
	A4	
	A6	
	Legal	
	Half Letter	
	Envelope #10	
	5 × 7	
	4 × 6	
	8 × 10	
	8.5 × 13	
	Executive	
	Auto Cropping	Select for photos with dark edges
	Max Area	Select for most photos
Original Type	**Text**	Specifies the type of original you are scanning
	Text & Image	
	Photo	
Density	**–4** to **+4**	Adjusts the lightness or darkness of scanned images.

Scan to setting	Available options	Description
Remove Shadow	**On**	Erases the shadows that appear in the center of a document when copying a book or the shadows that appear around a document when copying thick paper
	Off	
Remove Punch Holes	**On**	Erases the binding holes on a document
	Off	

Parent topic: Starting a Scan Using the Product Control Panel

Changing Default Scan Job Settings

You can view or change the default scan job settings your product uses when you scan to your computer. You do this using the Event Manager program.

1. Do one of the following to open Event Manager:
   - **Windows 10:** Click and select **EPSON Software** > **Event Manager**.
   - **Windows 8.x**: Navigate to the **Apps** screen and select **Event Manager**.
   - **Windows (other versions)**: Click or **Start** > **All Programs** or **Programs** > **EPSON Software** > **Event Manager**.
   - **Mac**: Open the **Applications** folder, click **Epson Software**, and select **Event Manager**.
2. Open the **Scanner** (Windows) or **Select Scanner** (Mac) drop-down list and select your product, if necessary.
3. Click **Make Job Settings**.
4. Open the **Edit Job Settings** drop-down list and select the scan job settings you want to view or change.
5. Change the settings as necessary.

   Note: If you create a new job, you can only assign it to the **Custom Action** setting. You can change the settings of the other assigned jobs, but you cannot rename them or select a different job.

6. Click **OK**.
7. Click **Close** to close the Event Manager window.

Parent topic: Starting a Scan Using the Product Control Panel

Setting Up a WSD Port (Windows 7/Windows Vista)

You can scan to a networked Windows computer using WSD (Web Services for Devices). You must first set up a WSD port on your Windows 7 or Windows Vista system (the port is set up automatically on Windows 10 and Windows 8.x).

Before you set up a WSD port, make sure you installed your product software, and connected your product and computer to the same network.

1. Turn on your product.
2. Print a network status sheet so you can identify the network name and model name for your product on the network.
3. Click or **Start** and select **Computer**.
4. On the left side of the window, select **Network**.
5. Locate your product on the Network screen, right-click it, and select **Install**.
6. When you see the User Account Control screen, click **Continue**.

   Note: If you see an Uninstall screen, click **Uninstall** and repeat these steps as necessary.

7. When you see the message **Your device is ready to use** in the Windows taskbar, click the message.
8. On the Driver Software Installation screen, make sure your product is listed as **Ready to use**. Then click **Close**.
9. Do one of the following:
   - **Windows 7**: Click and select **Devices and Printers**.
   - **Windows Vista**: Click **Start** and select **Control Panel** > **Hardware and Sound** > **Printers**.
10. Make sure that an icon appears for your product's name on the network.

When you use WSD, select your product name to scan over the network.

Parent topic: Starting a Scan Using the Product Control Panel

Starting a Scan Using the Epson Scan 2 Icon

You can start the Epson Scan 2 program to select scan settings, scan, and save the scanned image to a file.

Note: If you are using your Epson product with the Windows 10 S operating system, you cannot use the software described in this section. You also cannot download and install any Epson product software from the Epson website for use with Windows 10 S; you must obtain software only from the Windows Store.

- **Windows 10:** Click and select **EPSON** > **Epson Scan 2**.
- **Windows 8.x**: Navigate to the **Apps** screen and select **Epson Scan 2**.
- **Windows (other versions)**: Click or **Start**, and select **All Programs** or **Programs**. Select **EPSON** > **Epson Scan 2** > **Epson Scan 2**.
- **Mac:** Open the **Applications** folder, open the **Epson Software** folder, and select **Epson Scan 2**.

You see an Epson Scan 2 window like this:

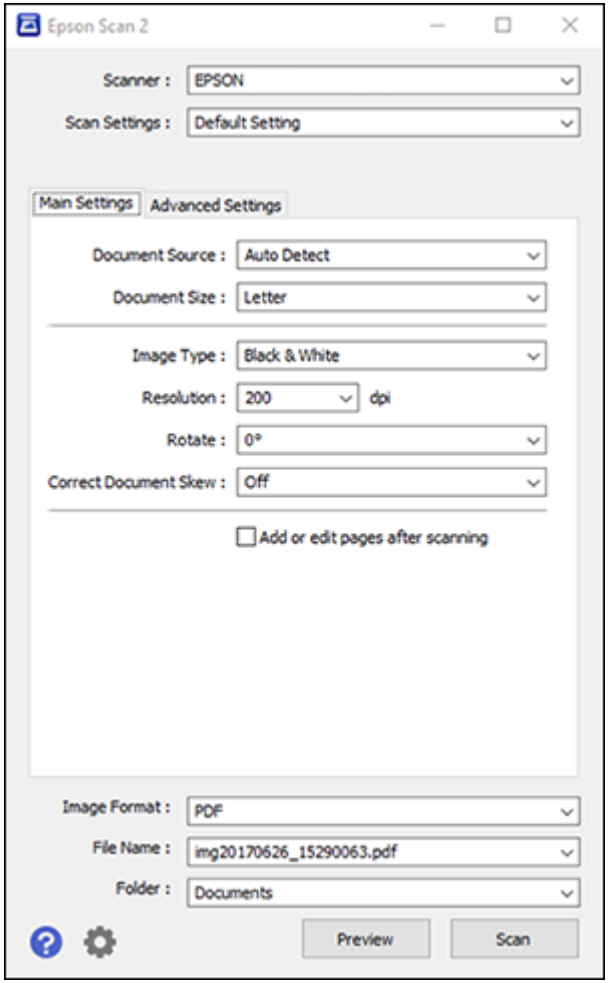

Parent topic: Starting a Scan

Starting a Scan from a Scanning Program

You can start Epson Scan 2 from a TWAIN-compliant scanning program to select scan settings, scan, and open the scanned image in the program.

Note: If you are using your Epson product with the Windows 10 S operating system, you cannot use the software described in this section. You also cannot download and install any Epson product software from the Epson website for use with Windows 10 S; you must obtain software only from the Windows Store.

1. Open your scanning program and select its scanning option. (See your scanning program help for instructions.)
2. Select your product.

   Note: In certain programs, you may need to select your product as the "source" first. If you see a **Select Source** option, choose it and select your product. With Windows, do not select a **WIA** option for your product; not all scan functions will be available.

You see an Epson Scan 2 window like this:

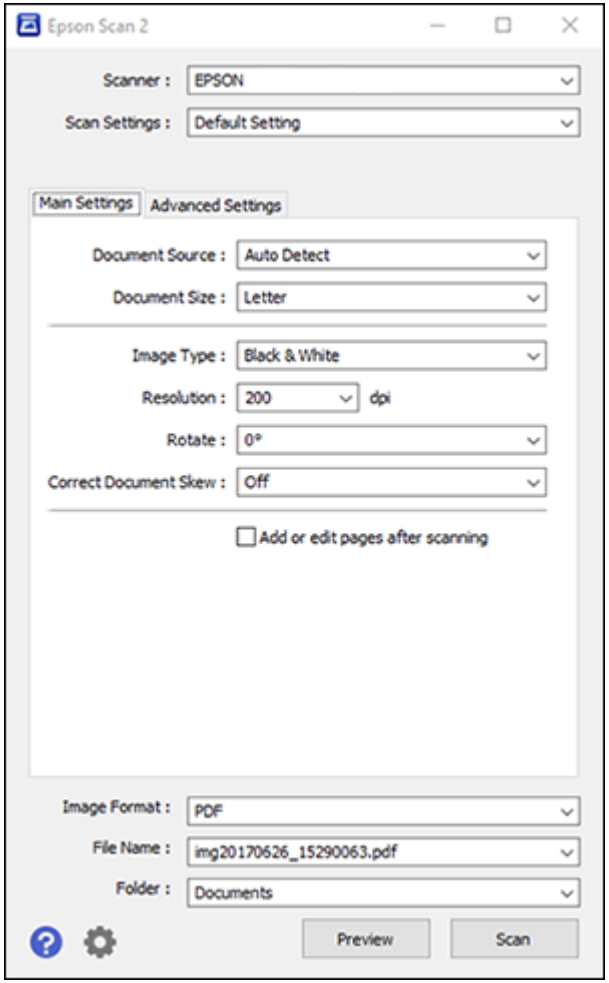

Parent topic: Starting a Scan

Starting a Scan from a Smart Device

You can start a scan from a smart device using the Epson iPrint app. You can save the scanned document to your device or a cloud service, e-mail it, or print it.

Note: If you are using your Epson product with the Windows 10 S operating system, you cannot use the software described in this section. You also cannot download and install any Epson product software from the Epson website for use with Windows 10 S; you must obtain software only from the Windows Store.

Note: Your device must be connected to the same wireless network as your Epson product.

1. Download the Epson iPrint app from your device's app store or from Epson's website.
2. Place your original on the product for scanning.
3. Open the Epson iPrint app and select your product.
4. Select the scan settings and scan your original.
5. Save your scanned image to a file or cloud location.

Parent topic: Starting a Scan

Scanning in Epson Scan 2

Epson Scan 2 automatically scans your document and saves the scanned file in PDF format in your operating system's Documents or My Documents folder, or opens it in your scanning program. You can select settings, preview, and change the scanned file settings as necessary.

Note: If you are using your Epson product with the Windows 10 S operating system, you cannot use the software described in this section. You also cannot download and install any Epson product software from the Epson website for use with Windows 10 S; you must obtain software only from the Windows Store.

1. Start Epson Scan 2.

You see this window:

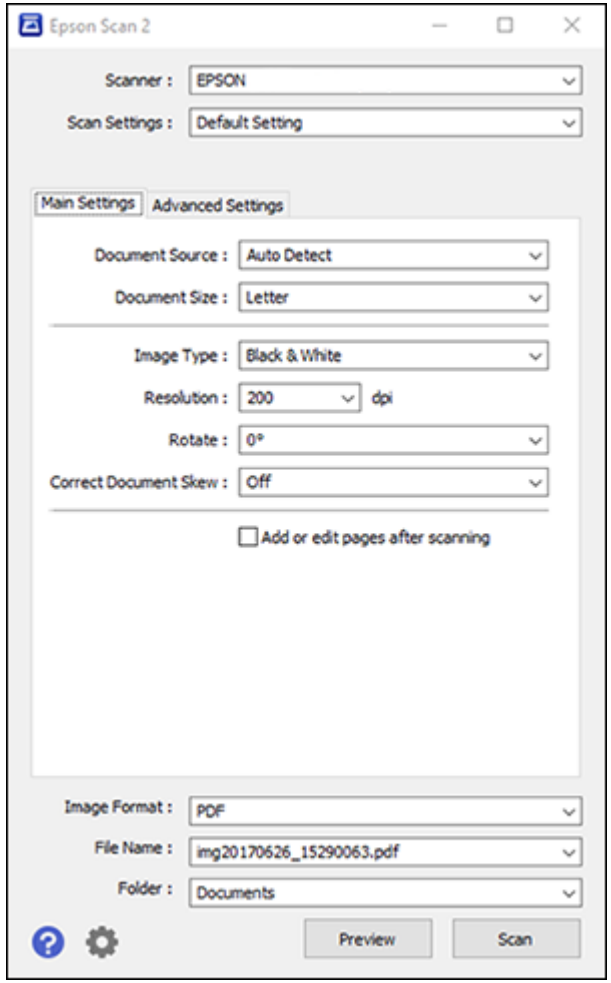

2. Select the **Document Source** setting that matches where you placed your original, or select **Auto Detect** to have Epson Scan 2 automatically detect the source.
3. Select the **Document Size** setting that matches the size of your original. You can select **Customize** to enter a custom size, if necessary.
4. Select the image type of your original and how you want it scanned as the **Image Type** setting.

5. Select the **Resolution** setting you want to use for your scan.
6. Select the **Rotate** setting to rotate the scanned image.
7. Select the **Correct Document Skew** setting to correct skewed originals, image contents, or both.
8. Click the **Preview** button.

   Epson Scan 2 previews your original and displays the results in the Epson Scan 2 window.

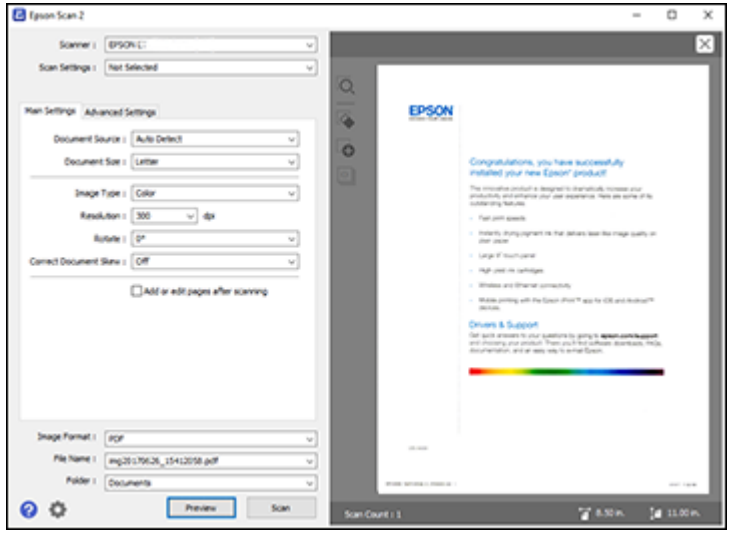

9. Reinsert your original into the ADF, if necessary.
10. Select any of the additional settings that you want to use on the Main Settings tab.
11. Click the **Advanced Settings** tab and select any settings that you want to use.
12. Select the format in which you want to save your scanned file as the **Image Format** setting. If necessary, select **Options** and select any desired format options.
13. Enter the file name for your scanned file in the **File Name** field. If necessary, select **Settings** to modify the file name settings.
14. Select the location in which you want to save your scanned file as the **Folder** setting. If necessary, select **Select** to create a new folder.
15. Click **Scan**.

    The product scans your original and saves the scanned file in the location you specified.

Additional Scanning Settings - Main Settings Tab
Additional Scanning Settings - Advanced Settings Tab
Saving Scanned Documents as a Searchable PDF Using Epson Scan 2
Image Format Options
Scan Resolution Guidelines

Parent topic: Scanning

Additional Scanning Settings - Main Settings Tab

You can select these additional scanning settings on the Epson Scan 2 Main Settings tab. Not all adjustment settings may be available, depending on other settings you have chosen.

Correct Document Skew
Corrects skewed originals, image contents, or both.

Add or edit pages after scanning
Lets you add, remove, or edit the pages in a scan, including rotating pages and changing the page order.

Note: To save multiple pages in a single file, you must select a file format that supports multiple pages such as **PDF** or **Multi-TIFF**. If you select another file format, each scanned image or page is saved as a separate file.

Parent topic: Scanning in Epson Scan 2

Additional Scanning Settings - Advanced Settings Tab

You can select these additional scanning settings on the Epson Scan 2 Advanced Settings tab. Not all adjustment settings may be available, depending on other settings you have chosen.

Remove Background
Removes the background of the originals.

Text Enhancement
Sharpens the appearance of letters in text documents.

Auto Area Segmentation
Makes black and white images clearer and text recognition more accurate by separating the text from the graphics.

Threshold
Adjusts the level at which black areas in text and line art are delineated, improving text recognition in OCR (Optical Character Recognition) programs.

Color Enhance
Enhances the shades of the color you select in the scanned image. This setting is available only if you select **Grayscale** or **Black & White** as the Image Type setting.

Brightness
Adjusts the overall lightness and darkness of the scanned image.

Contrast
Adjusts the difference between the light and dark areas of the overall scanned image.

Gamma
Adjusts the midtone density of the scanned image.

Unsharp Mask
Makes the edges of certain image areas clearer. Turn off this option to leave softer edges.

Descreening
Removes the ripple pattern that might appear in subtly shaded image areas, such as skin tones. This option improves results when scanning magazines or newspapers. (The results of descreening do not appear in the preview image, only in your scanned image.)

Edge Fill
Corrects shadowing around the edges of the image by filling the shadows with black or white.

Dual Image Output
Scans the original image twice using different output settings (Windows only).

Parent topic: Scanning in Epson Scan 2

Saving Scanned Documents as a Searchable PDF Using Epson Scan 2

You can scan a document and save the text in a searchable PDF. In a searchable PDF, text is recognized using Optical Character Recognition (OCR) and then embedded in the scanned original.

1. Load your original in the product for scanning.
2. Start Epson Scan 2.
3. Select your scan settings.
4. Click **Preview** and adjust the area you want to scan, if necessary.
5. If you are using the ADF, reload the ejected original.
6. Select **Searchable PDF** as the Image Format setting.
7. Select **Options** from the Image Format list.

You see this window:

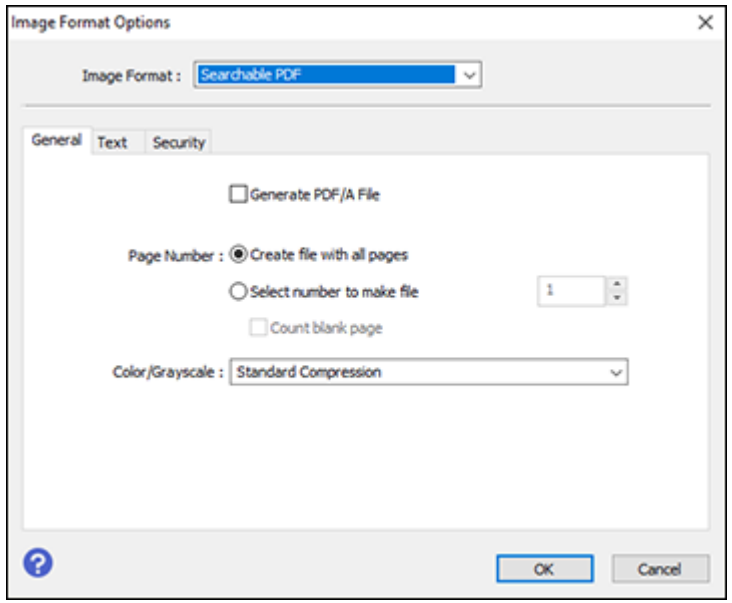

8. Select any of the options on the **General** tab.
9. Select the **Text** tab.
10. Make sure the language used in the document text is selected as the **Text Language** setting.
11. Select the **Security** tab if you want to add a password to the PDF or protect printing or editing properties.
12. Click **OK**.
13. Confirm the **File Name** setting and select a **Folder** setting for your document.
14. Click **Scan**.

    The scanned image is saved as a searchable PDF.

Parent topic: Scanning in Epson Scan 2

Image Format Options

You can select different image formats and related options. For details on available options, click the **?** icon on the Epson Scan 2 Image Format Options window. Not all image formats have options.

Bitmap (*.bmp)
A standard image file format for most Windows programs.

JPEG (*.jpg)
An image format that lets you highly compress image data. However, the higher the compression, the lower the image quality. (The TIFF format is recommended when you need to modify or retouch your scanned image.)

PNG (*.png)
An image format that does not lose quality during editing.

TIFF (*.tif)
A file format created for exchanging data between many programs, such as graphic and DTP software.

Multi-TIFF (*.tif)
A TIFF file format when multiple pages are saved to the same file, allowing you to edit the images using a compatible program.

PDF (*.pdf)
A document format that is readable by Windows and Mac systems using Adobe Reader, Acrobat, or other programs. You can save multi-page documents in one PDF file.

Searchable PDF (*.pdf)
A document format that is readable by Windows and Mac systems using Adobe Reader, Acrobat, or other programs. You can save multi-page documents in one PDF file. Recognized text in the scanned document can be searched.

Parent topic: Scanning in Epson Scan 2

Scan Resolution Guidelines

The **Resolution** setting, measured in dpi (dots per inch), controls the amount of detail captured in your scans. Increasing the resolution raises the amount of detail captured but comes with the following disadvantages:

- Larger file sizes
- It takes longer to scan your originals, send/receive your scans by email or fax, and to print your scans
- The image may become too large to fit on your display or print on paper

If you plan to enlarge a scanned image so you can print it at a larger size, you may need to increase the resolution from the default resolution set by Epson Scan 2. Follow these guidelines to determine the resolution setting you need:

- You will scan the image at its original size but enlarge it later in an image-editing program.

Increase the Epson Scan 2 Resolution setting in your scan. Increase the resolution by the same amount you will increase the image size to retain a high image quality. For example, if the resolution is 300 dpi (dots per inch) and you will double the image size later, change the Resolution setting to 600 dpi.

- You will scan the image at 100% or smaller size.

  Select the Epson Scan 2 Resolution setting based on how you will use the scanned image:

  - Email/view on a computer screen/post on the web: 96 to 200 dpi
  - Print/fax/convert to editable text (OCR)/create searchable PDF: 200 to 300 dpi

Parent topic: Scanning in Epson Scan 2

Faxing

See these sections to fax using your product.

Note: This product allows you to store names, telephone numbers, and fax data in its memory even when the power is turned off. Make sure you restore all of the default settings if you give away or dispose of the product. This will erase all of your network settings and fax data.

Connecting a Telephone or Answering Machine
Setting Up Fax Features
Setting Up Contacts and Contact Groups
Sending Faxes
Receiving Faxes
Checking Fax Status
Printing Fax Reports

Connecting a Telephone or Answering Machine

You must connect your product to a telephone wall jack to send or receive faxes. If you want to use the same telephone line to receive calls, you can connect a telephone or answering machine to your product using an additional phone cable.

Note: If you do not connect a telephone to your product, make sure Receive Mode is set to **Auto**. Otherwise, you cannot receive faxes.

1. Connect a phone cable to your telephone wall jack and to the **LINE** port on your product.

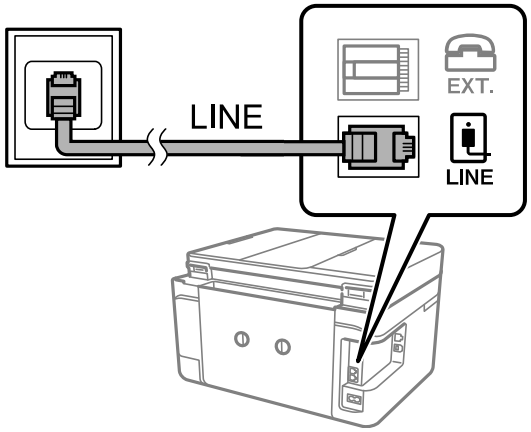

Note: If you have a DSL or ISDN connection, you must connect the appropriate DSL filter, or ISDN terminal adapter or router to the wall jack to be able to use the line for faxing or voice calls using your product. Contact your DSL or ISDN provider for the necessary equipment.

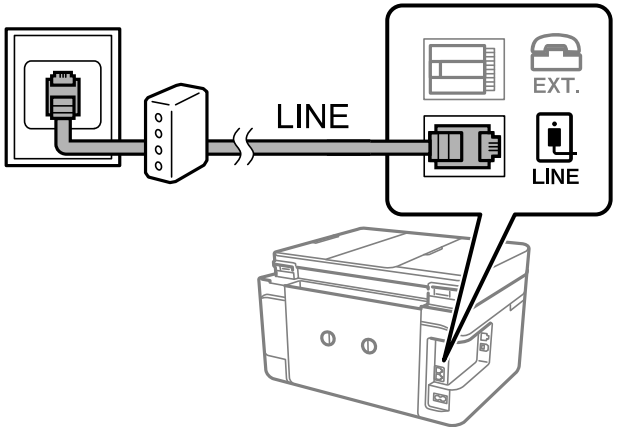

2. If you are connecting a telephone or answering machine to your product using a second phone cable, remove the cap from the **EXT** port on your product.

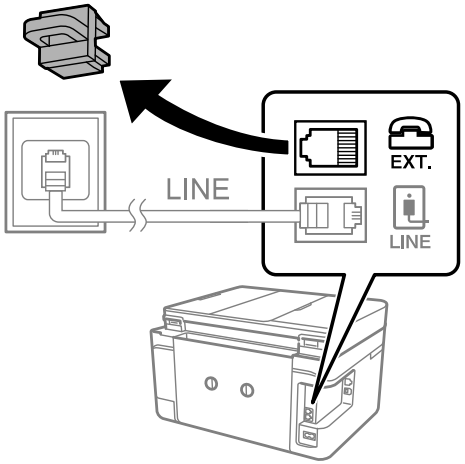

3. Connect a second phone cable to your telephone or answering machine and to the **EXT** port on your product.

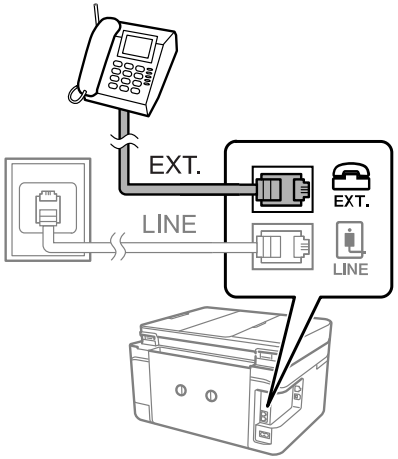

Note: If you connect an answering machine and Receive Mode is set to **Auto**, set the number of rings before your product answers a call to a number that is higher than your answering machine's setting for the number of rings.

Any phone or answering machine must be connected to the **EXT** port for your product to detect an incoming fax call when the phone is picked up. Epson cannot guarantee compatibility with VoIP, cable phone systems, or fiberoptic digital services such as FIOS.

Parent topic: Faxing

Setting Up Fax Features

Before faxing with your product, set up your fax header and select the fax features you want to use.

Note: If you leave your product unplugged for a long period of time, you may need to reset the date and time settings for faxes.

Setting Up Basic Fax Features
Selecting Advanced Fax Settings
Setting Up the Fax Utility - Windows
Setting Up Fax Features Using the Fax Utility - Mac

Parent topic: Faxing

Related tasks

Receiving Faxes Automatically

Setting Up Basic Fax Features

See these sections to select the basic settings you need to use the product's fax features.

Using the Fax Setup Wizard
Selecting the Line Type
Setting the Number of Rings to Answer

Parent topic: Setting Up Fax Features

Using the Fax Setup Wizard

You can setup the product's basic fax settings using the Fax Setting Wizard. This wizard is automatically displayed when the product is turned on for the first time. You can also change these settings individually from the Fax Settings menu.

1. Press the ⌂ home button, if necessary.

2. Select **Settings**.
3. Select **General Settings**.

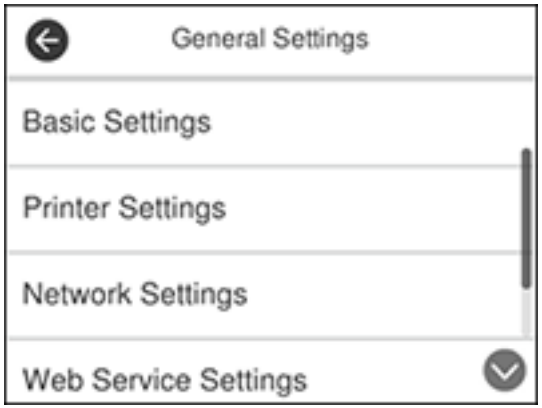

4. Scroll down and select **Fax Settings**.
5. Scroll down and select **Fax Setting Wizard**.

   The Fax Setting Wizard screen appears.
6. Select **Proceed**.
7. On the Fax Header screen, use the displayed keypad to enter the sender name for your fax source, such as your name or a business name. You can enter up to 40 characters.
8. On the Your Phone Number screen, use the displayed keypad to enter your fax number, up to 20 characters.

   Note: The name and phone number in the fax header identifies the source of the faxes you send.

9. On the Distinctive Ring Setting screen, do one of the following:
   - If you have subscribed to a distinctive ring service from your telephone company, select **Settings**. Select the ring pattern to be used for incoming faxes or select **All**.
   - If you do not have a distinctive ring service, select **Skip**.

   Note: Distinctive ring services allows you to have several phone numbers on one phone line. Each number is assigned a different ring pattern. You can use one number for voice calls and another for

fax calls. Select the ring pattern assigned to fax calls in the Distinctive Ring Setting. If you select a ring pattern other than **All**, Receive Mode is automatically set to **Auto**.

10. On the Proceed screen, confirm the displayed settings and select **Proceed**, or press the back arrow to change the settings.
11. On the Run Check Fax Connection screen, select **Start Checking** and follow the on-screen instructions to check the fax connection and print a report of the check result. If there are any errors reported, try the solutions on the report and run the check again.

If the Select Line Type screen appears, select the correct line type.

If the Select Dial Tone Detection screen appears, select **Disable**. However, disabling the dial tone detection function may drop the first digit of a fax number and send the fax to the wrong number.

Parent topic: Setting Up Basic Fax Features

Selecting the Line Type

If you connect the product to a PBX phone system or terminal adapter, you must change the product's line type. PBX (Private Branch Exchange) is used in office environments where an external access code such as “9” must be dialed to call an outside line. The default Line Type setting is PSTN (Public Switched Telephone Network), which is a standard home phone line.

1. Press the ⌂ home button, if necessary.
2. Select **Settings**.
3. Select **General Settings**.

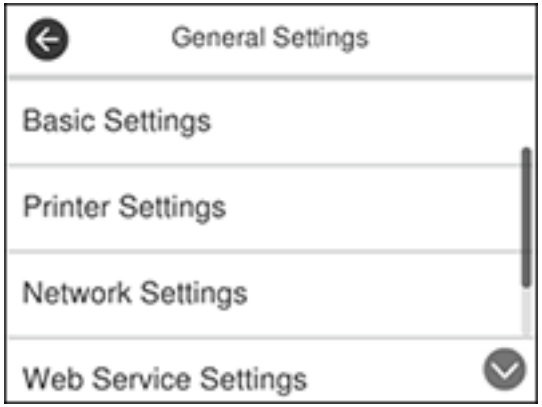

4. Scroll down and select **Fax Settings**.

5. Select **Basic Settings**.
6. Select **Line Type**.
7. Select **PBX**.

   You see a screen like this:

8. Set the switch to **Use** to activate the setting.
9. Select **Access Code**.
10. Use the displayed keypad to enter the access code, such as 9, and select **OK**.

Parent topic: Setting Up Basic Fax Features

Setting the Number of Rings to Answer

If you connect an external answering machine and select to receive faxes automatically, make sure the Rings to Answer setting is correct. The number of rings should be higher than the number of rings your answering machine is set to for answering a call.

1. Press the ⌂ home button, if necessary.
2. Select **Settings**.

3. Select **General Settings**.

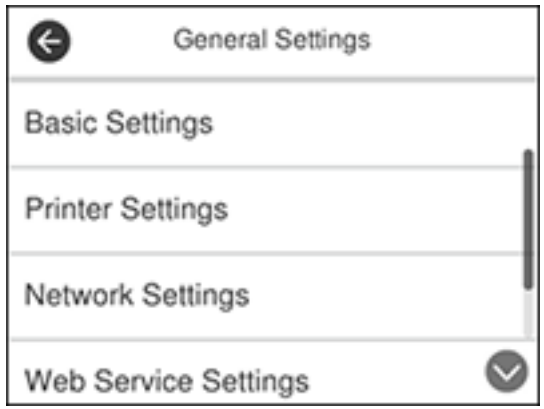

4. Scroll down and select **Fax Settings**.
5. Select **Basic Settings**.
6. Select **Rings to Answer**.

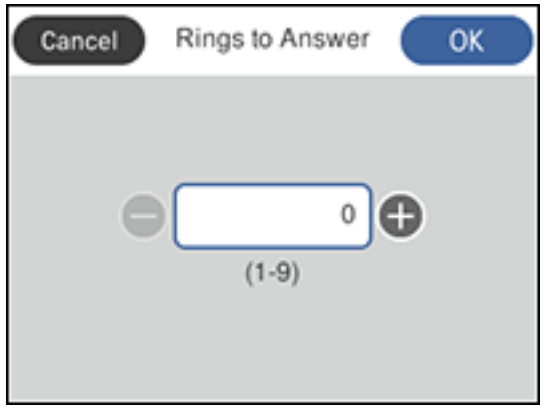

7. Select the number of rings and select **OK**. Make sure to select a number higher than the number of rings your answering machine is set to for answering a call.

Note: An answering machine picks up every call faster than the product, but the product can detect fax tones and start receiving faxes. If you answer the phone and hear a fax tone, check that the product has started receiving the fax, then hang up the phone.

Parent topic: Setting Up Basic Fax Features

Selecting Advanced Fax Settings

You can select a variety of advanced fax settings.

1. Press the home button, if necessary.
2. Select **Settings**.
3. Select **General Settings**.

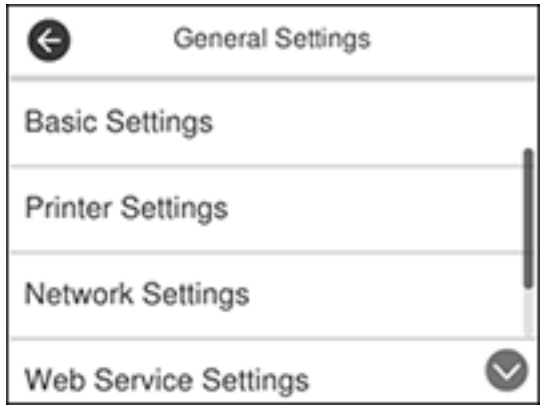

4. Scroll down and select **Fax Settings**.

You see a screen like this:

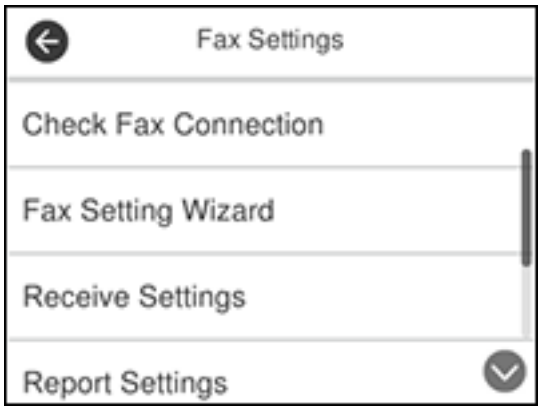

5. Select the group of settings you want to change.

Print Settings - Fax
Basic Settings - Fax
Security Settings - Fax

Parent topic: Setting Up Fax Features

Print Settings - Fax

Set the print options you want to use for incoming faxes in the **Receive Settings** > **Print Settings** menu.

Setting	Options	Description
Auto Reduction	**On**	Select to reduce the size of large received faxes to fit on the paper size in the selected paper source.
	Off	Select to print large incoming faxes at their original size on multiple sheets, if necessary.
Split Page Settings	**Delete Print Data After Split**	Select how to split large incoming faxes across multiple sheets.
	Overlap When Split	

Setting	Options	Description
Auto Rotation	**On**	If you have loaded A5-size paper, select **On** to rotate landscape-oriented incoming faxes so that they print correctly on the paper.
	Off	
Add Reception Information	**On**	Select **On** to include the date, time, the sender's information, and a page number in the header of your incoming faxes.
	Off	
2-Sided	**On**	Select **On** to print incoming faxes double sided. You can also select the **Binding Margin**.
	Off	
Print Start Timing	**All Pages Received**	Select to print incoming faxes after the product receives all of the pages of the document.
	First Page Received	Select to print incoming faxes as soon as the product receives the first page of the document.
Collation Stack	**On**	Select **On** to print incoming faxes so that the pages are stacked in the correct page order. (When the product is low on memory, this option may not be available.)
	Off	
Print Suspend Time	**Off**	Select **On** to set a time period to stop automatic printing of faxes or reports and save received faxes in the product's memory. (Make sure there is enough free memory before using this function.)
	On	
	Time to Stop	
	Time to Restart	
Quiet Mode	**On**	Select **On** to reduce noise during printing. (Printing speed may be reduced.)
	Off	

Parent topic: Selecting Advanced Fax Settings

Basic Settings - Fax

Set the basic options you want to use for incoming and outgoing faxes.

Setting	Options	Description
Fax Speed	**Fast(33,600bps)**	Sets the speed at which you send and receive faxes.
	Medium(14,400bps)	
	Slow(9,600bps)	
ECM	**On**	Turns on Error Correction Mode (ECM) to automatically correct errors in sent or received fax data.
	Off	Turns off Error Correction Mode (ECM); color faxes cannot be sent or received.
Dial Tone Detection	**On**	Automatically dials the number you enter for faxing when the product detects a dial tone.
	Off	Turns off automatic dial tone detection, which may be necessary if the product is connected to a PBX (Private Branch Exchange) or a TA (Terminal Adapter). However, turning this setting off may cause the product to drop the first digit of a fax number.
Line Type	**PSTN**	Selects a standard phone line (Public Switched Telephone Network).
	PBX	Selects Private Branch Exchange, the type of phone line used in office environments where an access code such as 9 must be used to call an outside line.
Header	**Fax Header**	Select to enter the header information and your phone number for inclusion on outgoing faxes.
	Your Phone Number	
Receive Mode	**Manual**	Lets you confirm whether an incoming fax should be printed; a telephone must be connected to the product
	Auto	Automatically receives and prints faxes.

Setting	Options	Description
Distinctive Ring	**All**	If you are using a Distinctive Ring Service on your phone line, your telephone company can assign two or more phone numbers to the same line and assign different ring patterns to each. If you use this service, select the number of rings for your fax number so your product can receive faxes on the correct number of rings. Select **All** for phones lines that do not use this service.
	Single	
	Double	
	Triple	
	Double&Triple	
Rings to Answer	1 to 9	Sets the number of rings before your product receives a fax. If Receive Mode is set to **Auto** and an answering machine is connected to the product, make sure this setting is set higher than the number of rings your answering machine is set to answer a call.
Remote Receive	**Off**	Lets you start receiving faxes using your phone instead of operating the product (if Receive Mode is set to **Auto**). When you select **On**, you must also set a **Start Code**. If you are using a cordless handset with its base connected to the product, you can start receiving the fax by entering the code using the handset.
	On	
	Start Code	
Rejection Fax	Various	Lets you automatically reject faxes received from blocked numbers, unrecognized contacts, or with blank headers.

Parent topic: Selecting Advanced Fax Settings

Security Settings - Fax

Set the security options you want to use for fax data.

Setting	Options	Description
Direct Dialing Restrictions	**Off**	Does not restrict dialed fax numbers.
	On	Allows faxing only to numbers stored in the contacts list or history.
	Enter Twice	Requires you to enter fax numbers twice to prevent errors.

Setting	Options	Description
Confirm Address List	**Off**	Selects whether or not to display a recipient confirmation screen before a fax is sent.
	On	
Backup Data Auto Clear	**Off**	Automatically erases sent or received fax data from your product's memory.
	On	
Clear Backup Data	—	Deletes all sent or received fax data remaining in your product's memory; run this function if you are giving away or disposing of your product.

Parent topic: Selecting Advanced Fax Settings

Setting Up the Fax Utility - Windows

You can set up the FAX Utility for Windows for use with your product.

Note: Before using the FAX Utility for Windows, make sure you have set up the fax features on your product using the product control panel. Also first confirm that you can send and receive faxes using the control panel.

1. Do one of the following:
   - **Windows 10:** Click and select **EPSON Software**.
   - **Windows 8.x**: Navigate to the **Apps** screen.
   - **Windows (other versions)**: Click or **Start** > **Programs** or **All Programs** > **EPSON Software**.
2. Select **FAX Utility**.

The first time you use the FAX Utility, you see this introduction window:

3. Read about the FAX Utility and click **Close** at the bottom of the window.

You see this window:

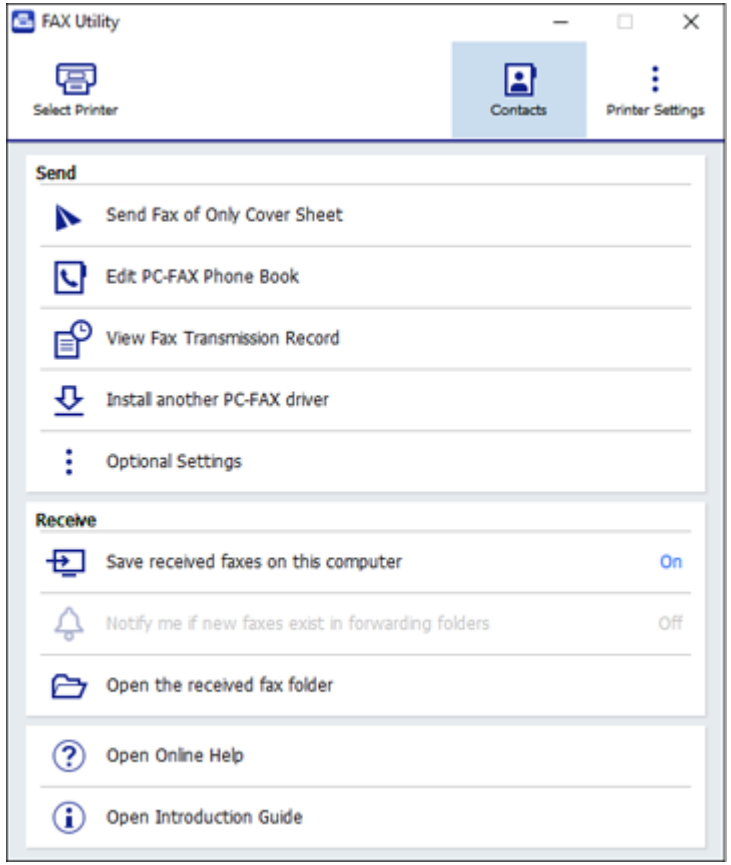

4. Click **Select Printer** and follow the on-screen instructions to transfer your product's fax settings to the FAX Utility.

   Note: For detailed information, click **Help** or **Open Online Help**.

Parent topic: Setting Up Fax Features

Setting Up Fax Features Using the Fax Utility - Mac

You can set up your fax header and select your fax settings using the FAX Utility for Mac.

1. In the Apple menu or the Dock, select **System Preferences**. Select **Print & Fax**, **Print & Scan**, or **Printers & Scanners**, select the **FAX** option for your product, and select **Options & Supplies**. Select **Utility** and select **Open Printer Utility**.
2. Double-click **FAX Utility**, if necessary.

   You see this window:

3. Select your **FAX** product in the Printer list.
4. Select **Fax Settings**.
5. Follow the prompts that appear on the screen to enter your fax header information and select your fax settings.

   Note: For detailed information, select the FAX Utility **?** icon.

Parent topic: Setting Up Fax Features

Setting Up Contacts and Contact Groups

You can set up a list of contacts and their fax numbers so you can quickly select them for faxing. You can also set up contact groups to send a fax message to multiple contacts.

Setting Up Contacts Using the Product Control Panel
Importing Contacts Using the Fax Utility - Windows
Setting Up Speed/Group Dial Lists Using the Fax Utility - Mac

Parent topic: Faxing

Setting Up Contacts Using the Product Control Panel

You can set up your contacts and contact groups using the control panel on your product.

Creating a Contact
Editing or Deleting a Contact
Creating a Contact Group
Editing or Deleting a Contact Group

Parent topic: Setting Up Contacts and Contact Groups

Creating a Contact

You can create a list of contacts to save frequently used fax numbers.

Note: You can create up to 99 contacts and contact groups combined.

1. Press the home button, if necessary.
2. Select **Fax**.

   You see a screen like this:

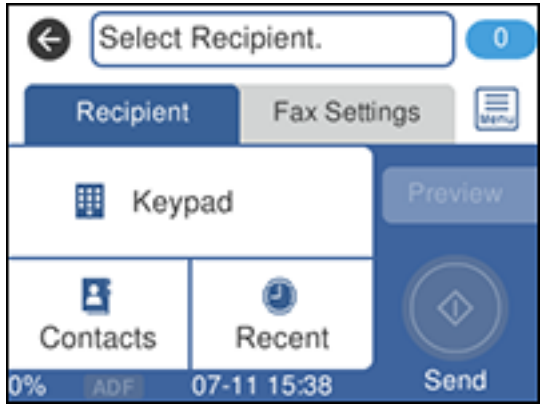

3. Select **Contacts**.

You see a screen like this:

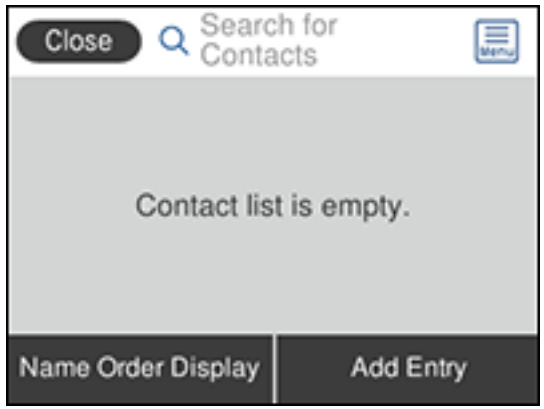

4. Select **Add Entry**.
5. Select **Add Contact**.

   You see a screen like this:

6. Select the **Registry Number** field and use the displayed keypad to change the registration number assigned to the new contact. (Changing this field is optional.)
7. Select the **Name** field, use the displayed keypad to enter the contact name (up to 30 characters), and press **OK**.

8. Select the **Index Word** field, use the displayed keypad to enter a word to use when searching for an entry (up to 30 characters), and press **OK**. (This field is optional.)
9. Select the **Fax Number** field, and use the displayed keypad to enter the fax number. You can enter up to 64 characters.

   Note: If necessary, enter an outside line access code (such as **9**) at the beginning of the fax number. If the access code has been set up in the **Line Type** setting, enter the **#** pound sign instead of the code.

10. Select **OK** > **Close**.

Parent topic: Setting Up Contacts Using the Product Control Panel

Editing or Deleting a Contact

You can edit or delete any of the contacts on your list.

1. Press the home button, if necessary.
2. Select **Fax**.

   You see a screen like this:

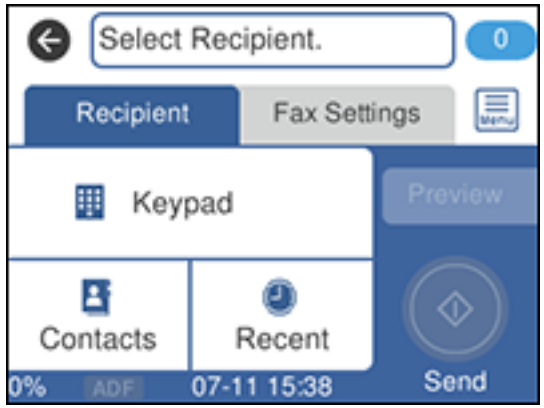

3. Select **Contacts**.
4. Select the icon next to the contact you want to edit or delete.

You see a screen like this:

5. Do one of the following:
   - To delete the contact, select **Delete** and select **Yes** on the confirmation screen.
   - To edit the contact, select **Edit**, select the item you want to change, enter the correct information, and select **OK**. When you are finished editing, select **OK**, and select **Close**.

Parent topic: Setting Up Contacts Using the Product Control Panel

Creating a Contact Group

You can create a group of contacts so that you can easily send faxes to multiple recipients.

Note: You can create up to 100 contacts and contact groups combined. You must create a contact before creating a contact group.

1. Press the ⌂ home button, if necessary.
2. Select **Fax**.

You see a screen like this:

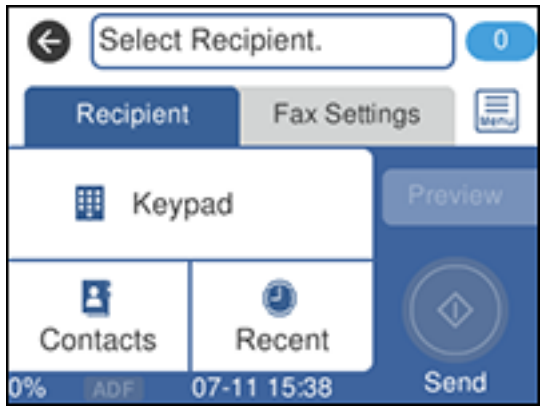

3. Select **Contacts**.
4. Select **Add Entry**.
5. Select **Add Group**.

   You see a screen like this:

6. Select the **Registry Number** field and use the on-screen keyboard if you want to change the registration number assigned to the new group. (Changing this field is optional.)

7. Select the **Group Name** field, use the displayed keyboard to enter the group name (up to 30 characters), and press **OK**.
8. Select the **Index Word** field, use the displayed keyboard to enter a word to use when searching for a group (up to 30 characters), and press **OK**. (This field is optional.)
9. Select **Contact(s) Added to the Group**.

   You see your contacts list.
10. Select the contacts you want to include in your group.

    Note: To display the contacts in alphabetical order, select **Name Order Display**.

    A check mark appears next to each selected contact.
11. Select **OK**.

Parent topic: Setting Up Contacts Using the Product Control Panel

Editing or Deleting a Contact Group

You can edit an existing contact group to add or delete entries. You can also delete the entire contact group.

1. Press the home button, if necessary.
2. Select **Fax**.

   You see a screen like this:

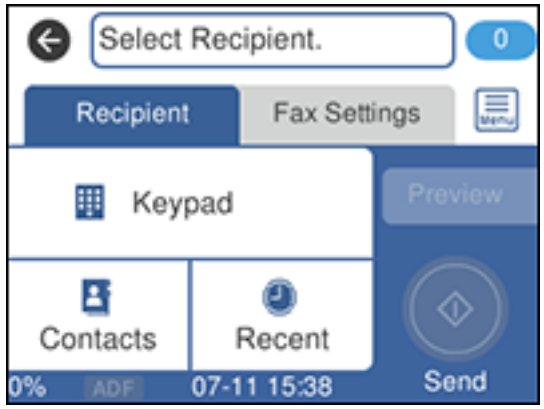

3. Select **Contacts**.

4. Select the icon next to the group you want to edit or delete.

   You see a screen like this:

   Note: If you want to delete the entire group, select **Delete**.

5. To edit the group, select **Edit**.
6. Select **Contact(s) Added to the Group**.

   You see a list of the contacts in your group.
7. To add or delete a contact, select the contact.
8. When you are finished, select **Close**, select **OK**, and select **Close** again.

Parent topic: Setting Up Contacts Using the Product Control Panel

Importing Contacts Using the Fax Utility - Windows

You can edit contacts stored in your product and import contacts from your Windows Address Book to the PC-FAX Phone Book in the FAX Utility for Windows.

1. Do one of the following:
   - **Windows 10:** Click and select **EPSON Software**.
   - **Windows 8.x**: Navigate to the **Apps** screen.

- **Windows (other versions)**: Click or **Start** > **Programs** or **All Programs** > **EPSON Software**.

2. Select **FAX Utility**.

   The first time you use the FAX Utility, you see this introduction window:

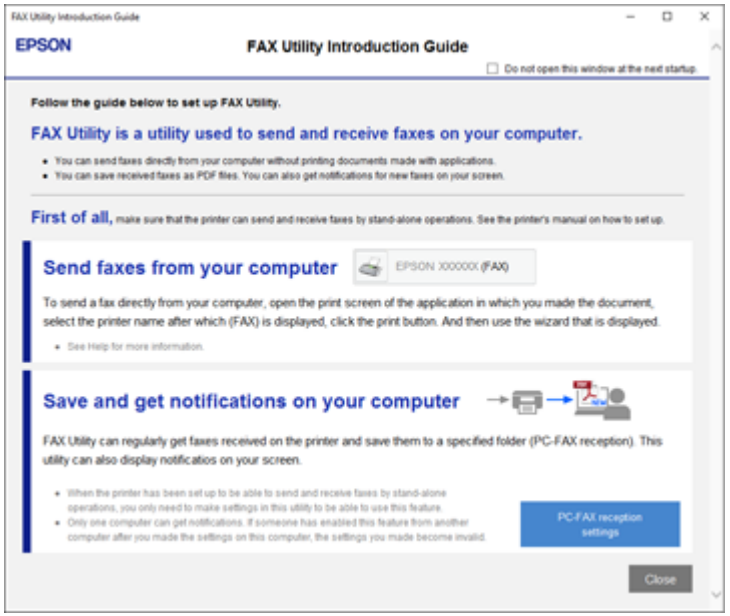

3. Read about the FAX Utility and click **Close** at the bottom of the window.

You see this window:

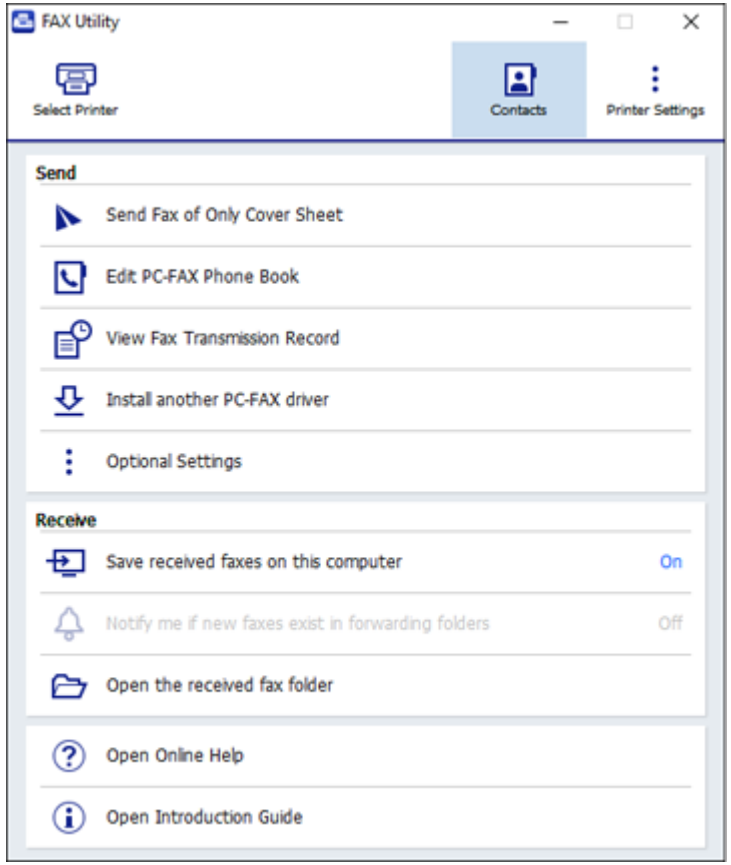

4. To edit the contacts list on your product, click **Contacts**.
5. Do one of the following:
   - To edit a contact, select it in the list and click the icon.
   - To delete a contact, select it in the list and click the icon.
6. To import fax numbers from your Windows Address Book into the FAX Utility PC-FAX Phone Book, select **Edit PC-FAX Phone Book**.

You see this window:

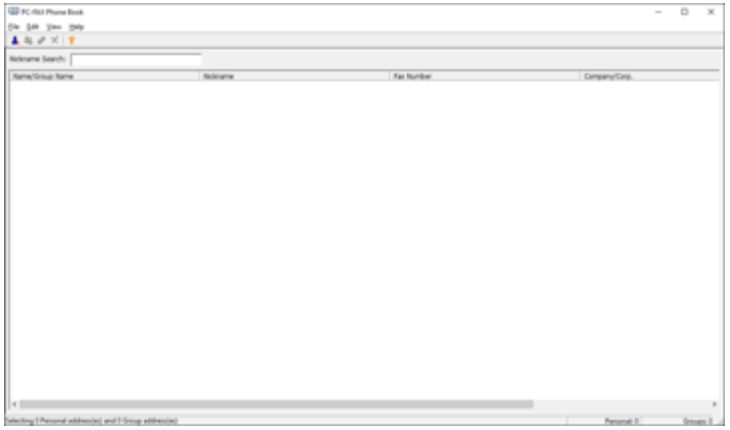

7. Select **File** > **Import From Windows Address Book**.
8. Select the contacts you want to import and click **OK**.

   Note: For detailed information, select **Help** or **Open Online Help**.

Parent topic: Setting Up Contacts and Contact Groups

Related topics

Setting Up Contacts Using the Product Control Panel

Setting Up Speed/Group Dial Lists Using the Fax Utility - Mac

You can set up your speed dial and group dial lists using the FAX Utility. The utility also lets you import fax numbers from the MacAddress Book and back up fax numbers to your product's memory.

Note: You can create up to 60 speed dial and group dial entries combined.

1. In the Apple menu or the Dock, select **System Preferences**. Select **Print & Fax**, **Print & Scan**, or **Printers & Scanners**, select the **FAX** option for your product, and select **Options & Supplies**. Select **Utility** and select **Open Printer Utility**.
2. Double-click **FAX Utility**, if necessary.

You see this window:

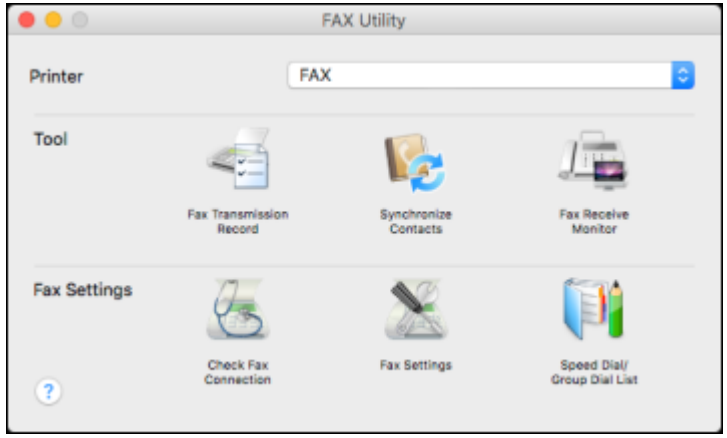

3. Select your **FAX** product in the Printer list.
4. Select **Speed Dial/Group Dial List**.

   You see this window:

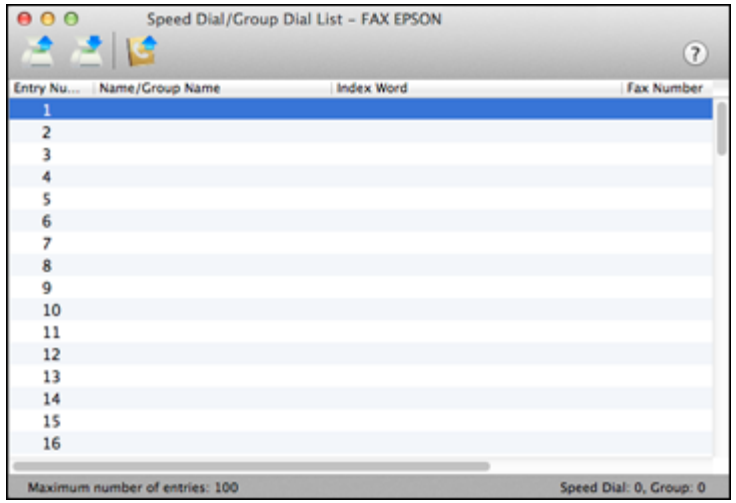

5. To add an entry, double-click an empty entry.

   Note: To edit an entry, select it and change the information. To delete an entry, select it and press the **Delete** key on your keyboard.

6. Do one of the following:
   - To create a speed dial entry, select **Speed Dial**, enter a name and fax number, and click **OK**.
   - To create a group dial entry, select **Group Dial**, enter a name, select your desired fax numbers, and click **OK**.
7. Repeat the previous steps as necessary to add all your speed dial or group dial entries.
8. To import entries from your MacAddress book, click the icon.
9. When you are finished, click the icon to save the entries to your product's memory.

Parent topic: Setting Up Contacts and Contact Groups

Related topics

Setting Up Contacts Using the Product Control Panel

Sending Faxes

See these sections to send faxes using your product.

Sending Faxes from the Product Control Panel
Sending Faxes Using the Fax Utility - Windows
Sending Faxes Using the Fax Utility - Mac
Dialing Fax Numbers from a Connected Telephone

Parent topic: Faxing

Sending Faxes from the Product Control Panel

See these sections to send faxes using the product's control panel.

Sending a Fax Using the Keypad, Contact List, or History
Fax Sending Options
Sending a Fax at a Specified Time

Parent topic: Sending Faxes

Related tasks

Selecting the Line Type

Related topics

Setting Up Contacts Using the Product Control Panel

Placing Originals on the Product

Sending a Fax Using the Keypad, Contact List, or History

You can send a fax from your product control panel by entering the fax number, or selecting the number from either the contact list or fax history.

Note: You can send a black-and-white fax to up to 100 contacts or 99 groups at a time, or send a color fax to one recipient at a time. If your recipient's fax machine does not print in color, your fax is automatically sent in black-and-white.

1. Place your original on the product for faxing.
2. Press the ⌂ home button, if necessary.
3. Select **Fax**.

   You see a screen like this:

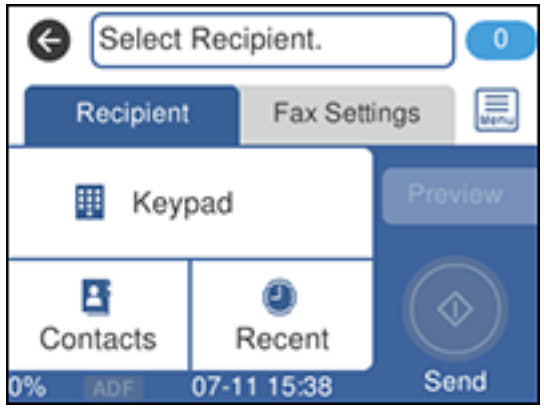

4. Do one of the following to select fax recipients:
   - **Manually enter a fax number**: Select **Keypad**, enter a fax number using the displayed keypad, and press **OK** when done. To add another fax number, repeat this step; the number of multiple recipients appears in the upper right corner of the LCD screen.

Note: If direct dialing has been restricted, you can only select the number from the contact list or fax history. If necessary, enter an outside line access code (such as 9) at the beginning of the fax number. If the access code has been set up in the **Line Type** setting, enter the **#** pound sign instead of the code. If your fax number requires a brief pause, select **–** to insert a pause symbol (–).

- **Select from the contact list**: Select **Contacts** to display the contact list. Select one or more contacts (select the contact again to deselect it), and select **Close**.
- **Select from the sent fax history**: Select **Recent** to display the sent fax history. Select a recipient from the list.

Note: To delete selected recipients, press the number of multiple recipients displayed in the upper right corner of the LCD screen. Select each recipient you want to delete and select **Remove**.

5. If you need to change any fax settings, select **Fax Settings** and select your settings.
6. If you want to preview your fax in black-and-white on the LCD screen, select **Preview**. (If the preview looks incorrect, select **Cancel**, reposition the document or change the fax settings, and repeat this step.) You cannot send the fax in color after previewing it.

   Note: If you do not touch the preview screen for 20 seconds, your product sends the fax automatically. You cannot preview images when the **Direct Send** setting is turned on.

7. Select **Send**.

   Note: To cancel faxing, select the icon.

   Your product scans your original and prompts you to place additional pages, if necessary.

After scanning your originals, your product dials the number and sends the fax.

Parent topic: Sending Faxes from the Product Control Panel

Fax Sending Options

While sending a fax, you can select **Fax Settings** and select these options.

Setting	Options	Description
Original Size (Glass)	**Half Letter**	Sets the size for a document placed on the scanner glass
	A5	
	Letter	
	A4	
Color Mode	**B&W**	Select whether to scan images in color or black and white
	Color	
Resolution	**Standard**	Adjusts the scan resolution and print quality of outgoing faxes
	Fine	
	Photo	
Density	Varying levels available	Lets you select from various density levels
Remove Background	**Auto**	Automatically removes any background color on scanned images
	Varying levels available	Lets you select from various levels of background color adjustment
ADF Continuous Scan	**Off**	Select **On** to have the product to ask if you want to scan another page after a document in the ADF has finished scanning
	On	
Direct Send	**Off**	Select **On** to send black-and-white faxes to a single recipient as soon as the connection is made, without saving the scanned image to memory. You cannot use this setting when sending a color fax or sending a fax to multiple recipients.
	On	
Send Fax Later	**Off**	Select **On** to send the current fax at a selected time
	On	
Add Sender Information	**Off**	Lets you include a header, your phone number, or a destination list in the selected location on your outgoing faxes
	Outside of Image	
	Inside of Image	

Setting	Options	Description
Transmission Report	**Print on Error**	Lets you select when to print transmission reports
	Print	
	Do Not Print	

Parent topic: Sending Faxes from the Product Control Panel

Sending a Fax at a Specified Time

You can send a fax at a time of your choice. You can only schedule one fax at a time.

Note: Make sure the product's date and time settings are correct. You can only send faxes in black-and-white when you use this option.

1. Place your original on the product for faxing.
2. Press the ⌂ home button, if necessary.
3. Select **Fax**.

   You see a screen like this:

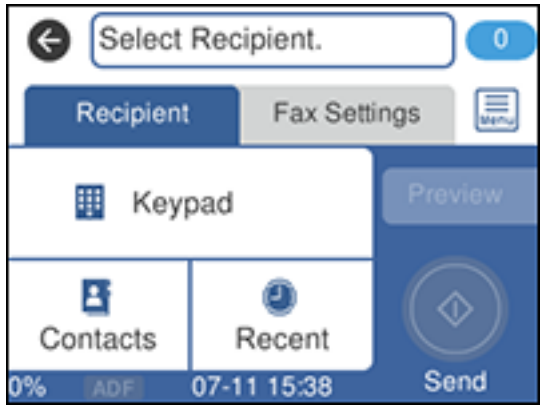

4. Enter a fax number or select a number from the Contacts or Recent list.
5. Select **Fax Settings**.
6. Select **Send Fax Later**.

7. Select **On**.
8. Select **Time**, use the displayed keypad on the LCD screen to enter your desired time, and select **OK**, then select **OK** again.
9. Select the **Recipient** tab and select **Send**.

   Note: To cancel faxing, select the icon.

After scanning your originals, your product dials the number and sends the fax at the specified time.

Note: If the product is turned off at the specified time, the fax is sent when it is powered on.

Parent topic: Sending Faxes from the Product Control Panel

Related topics

Setting Up Contacts and Contact Groups

Placing Originals on the Product

Sending Faxes Using the Fax Utility - Windows

You can send a fax from a printing program in Windows. You can fax up to 100 pages at a time, including a cover sheet.

1. Open the file you want to fax and select the print command.

You see a window like this:

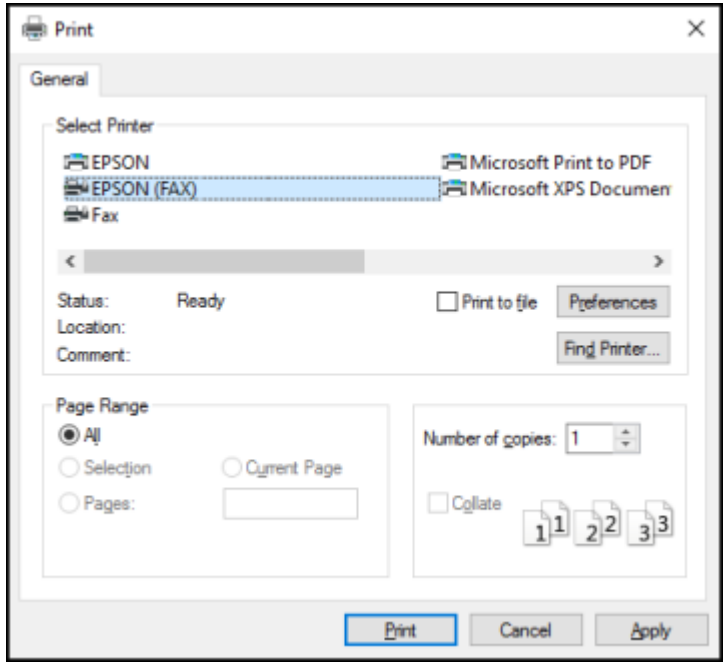

2. Select your product with the **FAX** option as the printer.
3. To change the Paper Size, Orientation, Color, Image Quality, or Character Density settings, click the **Preferences** or **Properties** button.

   Note: If you see a **Setup**, **Printer**, or **Options** button, click it. Then click **Preferences** or **Properties** on the next screen. For more information about selecting fax print settings, click **Help**.

4. Select the Page Range as necessary. (Leave the Number of copies set to **1**.)
5. Click **Print** or **OK**.

If you're faxing for the first time, you see a window like this one:

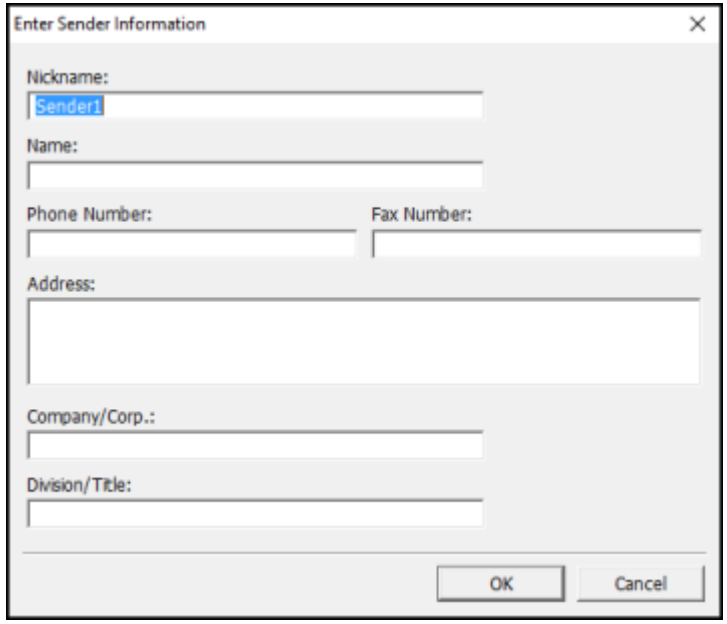

6. Enter your sender information so that recipients can identify the origin of the fax. Then click **OK** to save the sender information.

You see a window like this:

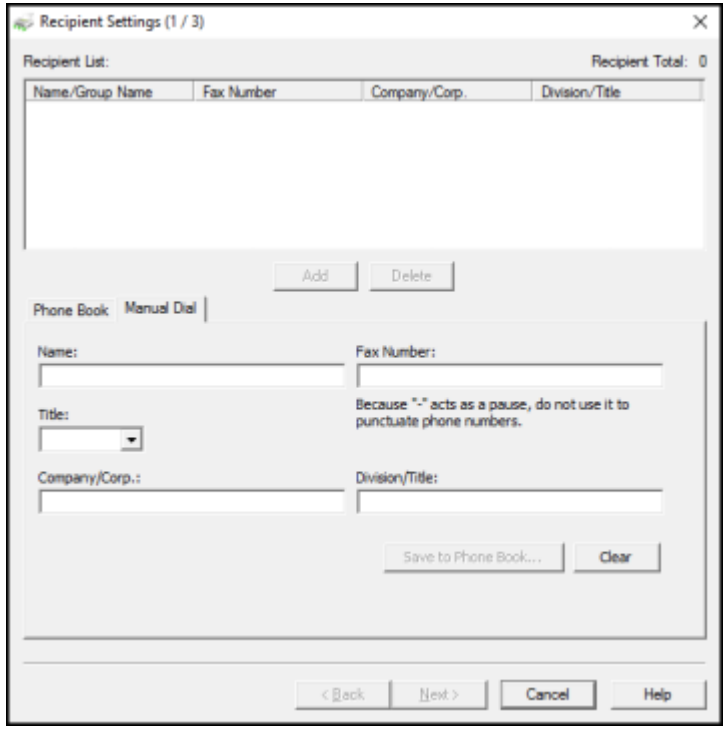

7. Enter the recipient's name and fax number or select a recipient from the phonebook, then click **Next**.

   Note: For detailed instructions on using the Epson FAX Utility, click **Help**.

8. Select a cover sheet and enter a subject and message, then click **Next**.
9. Click **Send** to transmit your fax.

Parent topic: Sending Faxes

Sending Faxes Using the Fax Utility - Mac

You can send a fax from a Mac printing program using the FAX Utility. You can fax up to 100 pages at a time, including a cover sheet.

1. Open the file you want to fax.

2. Select the print command in your application.

   Note: You may need to select a print icon on your screen, the **Print** option in the **File** menu, or another command. See your application's help utility for details.

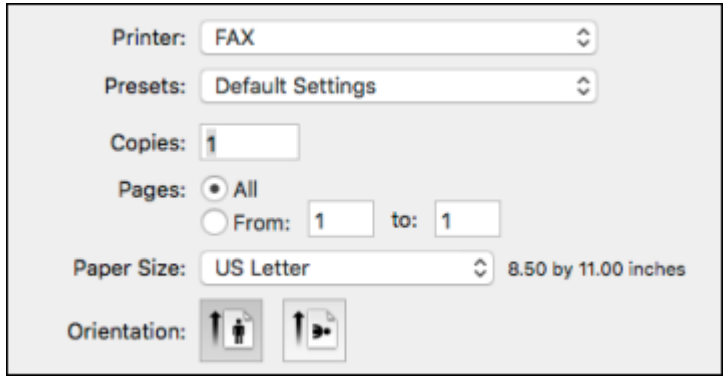

3. Select your product **FAX** option as the **Printer** setting.
4. If necessary, click the arrow next to the Printer setting or the **Show Details** button to expand the print window.
5. Select the number of pages you are faxing as the **Pages** setting.

   Note: Leave the **Copies** setting set to **1**.

6. Select **Recipient Settings** from the pop-up menu.

You see this window:

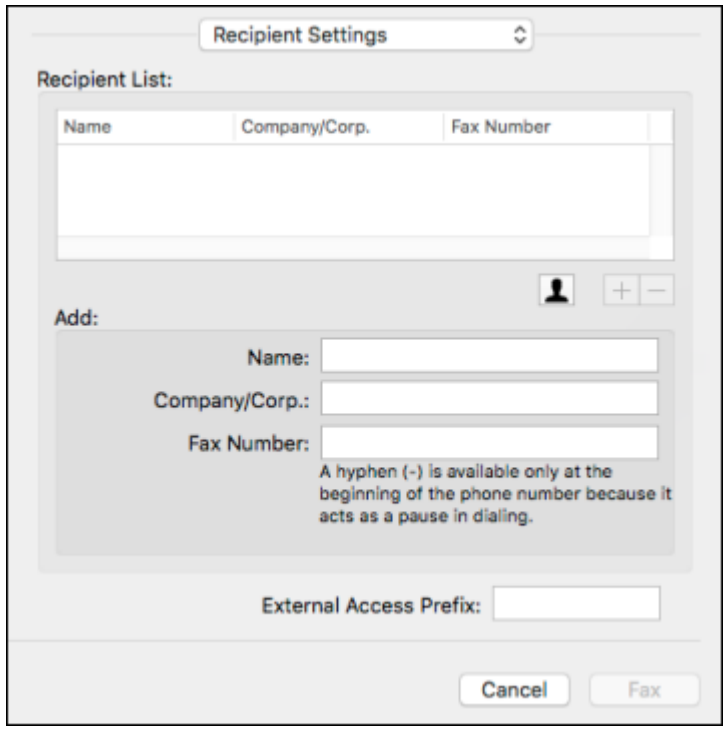

7. Do one of the following to choose your recipient:
   - Select a name or group from the **Recipient List**.
   - Enter a name, company, and fax number and click the **+** button.
   - Click the icon and select a recipient from your address book.
8. Select **Fax Settings** from the pop-up menu.

You see this window:

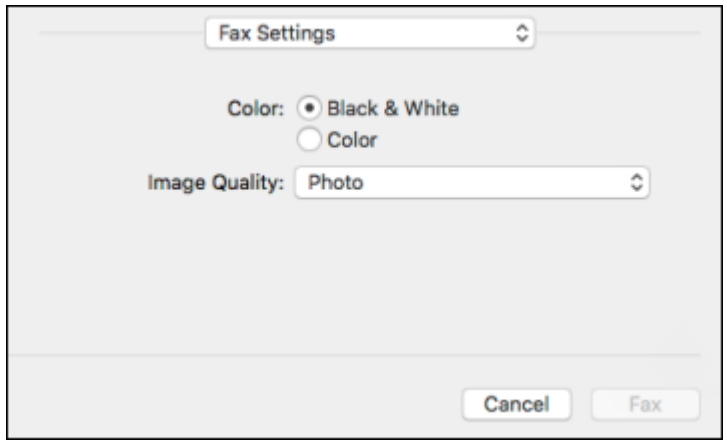

9. Select the **Color** and **Image Quality** settings you want to use for your fax.
10. Click **Fax**.

Parent topic: Sending Faxes

Dialing Fax Numbers from a Connected Telephone

If you connected a telephone to the **EXT** port on your product, you can send a fax by dialing the fax number from the connected telephone. If the recipient's phone number and fax number are the same, you can speak to the recipient before sending the fax.

1. Place your original on the product for faxing.
2. Press the ⌂ home button, if necessary.
3. Dial the fax number from the connected telephone. Speak to the recipient if necessary.

   Note: If you are using a pre-paid calling card, enter the number and password required to use the card before entering the destination fax number.

4. Select **Fax** on the LCD screen.

5. Select **Fax Settings** and select any settings as necessary.

   Note: Your product now communicates with the recipient's fax machine. Do not hang up the telephone.

6. When you hear a fax tone, select **Send** to start sending the fax.

   Note: If your recipient's fax machine does not print in color, your fax is automatically sent in black-and-white.

7. Hang up the telephone.

Parent topic: Sending Faxes

Receiving Faxes

See these sections to receive faxes with your product.

Fax Reception
Receiving Faxes Automatically
Receiving Faxes Manually
Receiving a Fax by Polling
Viewing a Fax on the LCD Screen (Using the Inbox)
Selecting Received Fax Options Using the Fax Utility - Windows

Parent topic: Faxing

Fax Reception

Your product will automatically receive and print faxes when you set the Receive Mode to **Auto**.

If you connected a telephone to your product so you can use the same phone line for faxes and voice calls, you can also set your product to receive faxes manually. This allows you to check for a fax tone using the telephone and press a button on your product to receive the fax.

Make sure to load paper in your product and select your fax settings before receiving a fax.

Note: If you run out of paper during fax printing, load more paper and press the button indicated on your product's LCD screen to continue.

Parent topic: Receiving Faxes

Receiving Faxes Automatically

To receive faxes automatically, make sure **Receive Mode** is set to **Auto** (the default setting for the product).

To change the **Receive Mode** if necessary, select **Settings** > **General Settings** > **Fax Settings** > **Basic Settings** > **Receive Mode**.

If an answering machine is connected, make sure the product's **Rings to Answer** setting is set higher than the number of rings your answering machine is set to answer a call. For example, if the answering machine is set to pick up on the fourth ring, set the product to pick up on the fifth ring or later.

Parent topic: Receiving Faxes

Related tasks

Receiving Faxes Manually

Receiving Faxes Manually

You can set up your product to receive faxes manually by setting the Receive Mode to **Manual**. This lets you check for a fax tone on the connected telephone before receiving a fax.

1. To change the Receive Mode, select **Settings** > **General Settings** > **Fax Settings** > **Basic Settings** > **Receive Mode** and select **Manual**.
2. When the connected telephone rings, answer the call.
3. If you hear a fax tone, select **Fax** on the LCD display.

   Note: To receive a fax using the attached telephone instead of the product control panel, enable the **Fax Settings** > **Basic Settings** > **Remote Receive** setting.

4. Select **Send/Receive**.
5. Select **Recv.**.
6. Select the ◇ icon to start receiving the fax.
7. Hang up the telephone.

Parent topic: Receiving Faxes

Related tasks

Receiving Faxes Automatically

Receiving a Fax by Polling

You can use polling to receive a fax from another fax machine (such as a fax information service).

Note: You cannot use polling to receive a fax from a fax information service that uses audio guidance.

1. Press the home button, if necessary.
2. Select **Fax**.

   You see a screen like this:

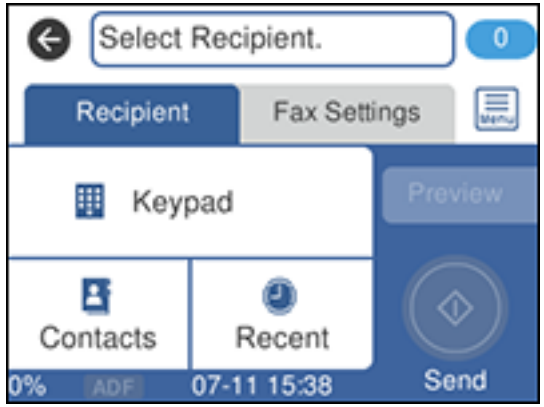

3. Press the icon.
4. Set **Polling Receive** to **On**.
5. Select **Close**.
6. Enter the fax number you expect to receive the fax from.
7. Select **Polling** to start receiving the fax.

Parent topic: Receiving Faxes

Viewing a Fax on the LCD Screen (Using the Inbox)

You can save received faxes in your product's memory and view them on the LCD screen.

1. Press the home button, if necessary.
2. Select **Settings**.

3. Select **General Settings**.

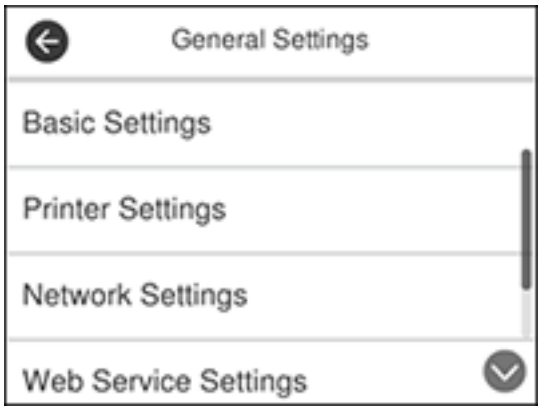

4. Scroll down and select **Fax Settings**.
5. Select **Receive Settings**.
6. Select **Fax Output Settings**.

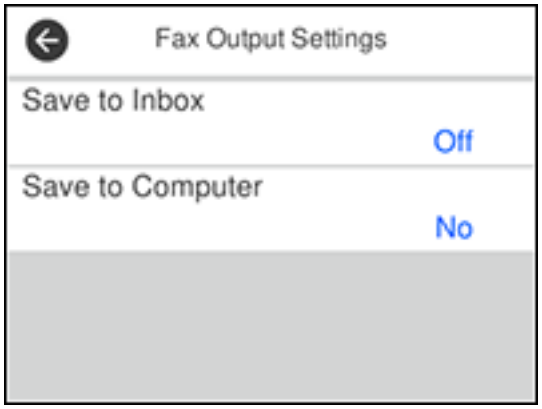

7. Select **Save to Inbox**.
8. Set **Save to Inbox** to **On**.
9. Select **Option When Memory is Full** and choose an option.

10. Select **Inbox Password Settings** to set, change, or reset the password for the inbox.

    Note: You cannot set an Inbox password if you set **Option When Memory is Full** to **Receive and print faxes**.

11. Press the home button.
12. Select . Enter the inbox password, if necessary.
13. Select the fax you want to view.

    You see the fax displayed on the screen.

14. Press the icon.
15. Select one of the printing or deleting options, and follow the on-screen instructions.

Note: Delete faxes after you print or view them to prevent the product's memory from filling up. When the memory is full, you can only print or reject incoming faxes.

Parent topic: Receiving Faxes

Selecting Received Fax Options Using the Fax Utility - Windows

You can select options for use with received faxes using the FAX Utility for Windows.

1. Do one of the following:
   - **Windows 10:** Click and select **EPSON Software**.
   - **Windows 8.x**: Navigate to the **Apps** screen.
   - **Windows (other versions)**: Click or **Start** > **Programs** or **All Programs** > **EPSON Software**.
2. Select **FAX Utility**.

The first time you use the FAX Utility, you see this introduction window:

3. Read about the FAX Utility and click **Close** at the bottom of the window.

You see this window:

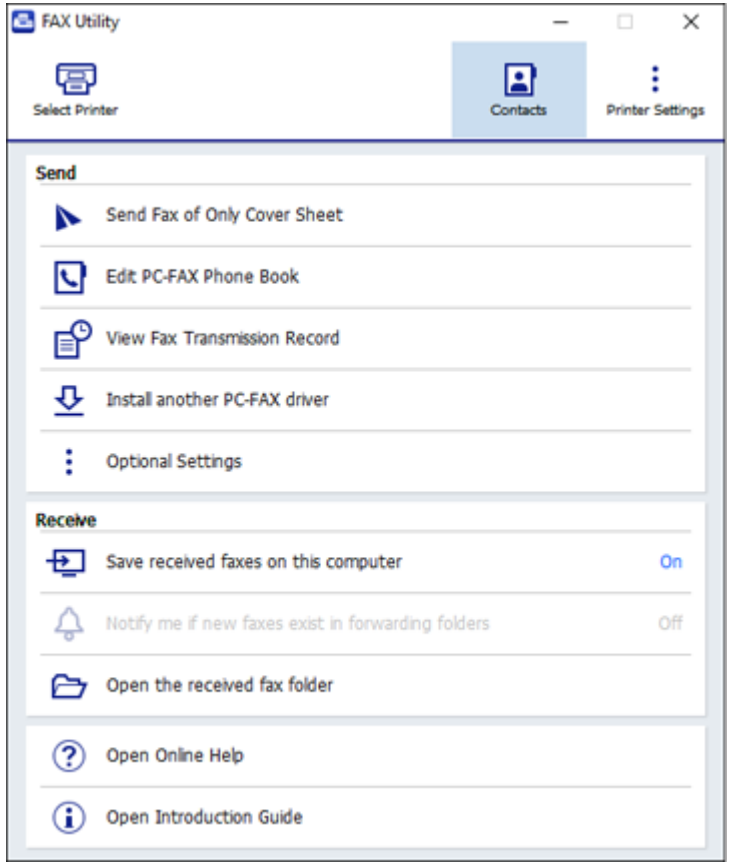

4. To save faxes received by your product on your computer, select **Save received faxes on this computer**.
5. Select the destination folder and other options, and click **OK**.

   You return to the FAX Utility window.
6. To receive notifications when received faxes arrive in the selected destination folder on your computer, select **Notify me if new faxes exist in forwarding folders**.

7. Select how often you want to be notified of received faxes and click **OK**.

   Note: For detailed information, click **Help** or **Open Online Help**.

Parent topic: Receiving Faxes

Checking Fax Status

You can check the status of current fax jobs, or faxes that have been received or sent on the product control panel.

1. Press the home button, if necessary.
2. Select **Fax**.

   You see a screen like this:

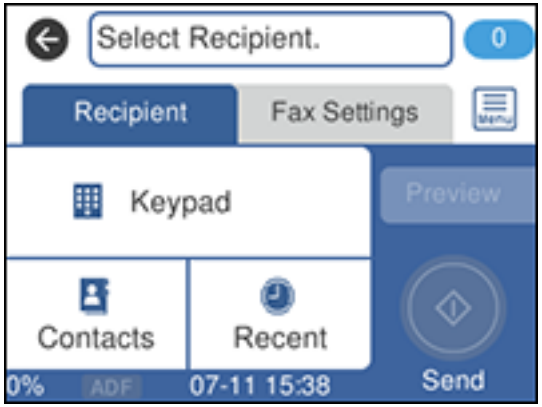

3. Select the icon.
4. Select **Transmission History** and select the fax job you want to check.

   Note: If you see a numbered icon above the icon on your product's LCD screen or the received fax light is flashing, received faxes have been temporarily saved to the product's memory.

Parent topic: Faxing

Printing Fax Reports

You can print several types of fax reports whenever necessary.

1. Press the home button, if necessary.
2. Select **Fax**.

   You see a screen like this:

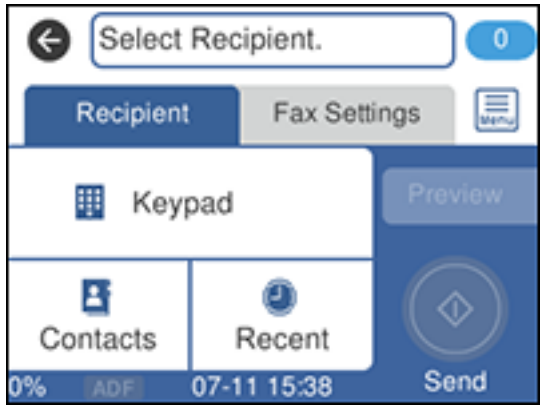

3. Press the icon.
4. Select **Fax Report**.
5. Select the fax report you want to print.

Fax Report Options

Parent topic: Faxing

Fax Report Options

Select the fax report or list you want to print.

Last Transmission
Print a report on the previous fax that was sent or received through polling. You can use the **Fax Settings** > **Transmission Report** setting to print the report automatically.

Fax Log
View or print a report on recent fax transmissions. You can use the **Settings** > **General Settings** > **Fax Settings** > **Report Settings** > **Fax Log Auto Print** setting to print the report automatically.

Fax Settings List

Print a list of the current fax communication settings.

Protocol Trace

Print a detailed report for the previous sent or received fax.

Parent topic: Printing Fax Reports

Refilling Ink

When the ink level is below the lower line on an ink tank, you need to refill it.

Before checking the ink levels or refilling an ink tank as described here, be sure to read the ink safety precautions.

Caution: If the ink level is below the lower line on the ink tank, fill it to the upper line on the ink tank. Continued use of the product when the ink level is below the lower line on a tank could damage the product.

Ink Safety Precautions
Check Ink Levels
Purchase Epson Ink and Maintenance Box
Refilling the Ink Tanks
Maintenance Box Replacement

Ink Safety Precautions

Note: The product has a low ink alert system. The accuracy of this system depends on the user refilling the ink tanks correctly. The product cannot directly measure the ink levels in the tanks; instead it estimates the amount of ink remaining by internally monitoring ink usage. The low ink alert system may generate inaccurate messages if the ink tanks are not refilled according to these instructions.

As a precaution, perform regular visual inspections of the ink tanks to ensure ink levels do not fall below the lower line. Continued use of the product when the ink level is below the lower line on the tank could damage the product.

Ink Handling Precautions

- Keep ink bottles and the ink tanks out of the reach of children. Do not allow children to drink from or handle the ink bottles and bottle caps.
- Do not tilt or shake an ink bottle after opening it; otherwise, ink may leak.
- If ink gets on your skin, wash it thoroughly with soap and water. If ink gets into your eyes, flush them immediately with water. If ink gets into your mouth, spit it out immediately. Seek medical advice if problems persist.
- Do not squeeze the ink bottles.

Ink Refilling Precautions

- Use ink bottles with the correct part number for this product.
- Epson's warranties do not extend to any damage caused by the use of third-party ink or ink not designed for your printer.
- This product requires careful handling of ink. Ink may splatter when the ink tanks are filled or refilled with ink. If ink gets on your clothes or belongings, it may not come off.
- Do not open the ink bottle package until you are ready to fill an ink tank. Ink bottles are vacuum packed to maintain reliability. If you leave an ink bottle unpacked for a long time before using it, print quality may be affected.
- If the ink level is below the lower line on the ink tank, refill the ink. Continued use of the product when the ink level is below the lower line on the ink tank could damage the product.
- Epson recommends filling all ink tanks to the upper line when the product is not operating to reset the ink levels.
- After bringing an ink bottle inside from a cold storage site, allow it to warm up at room temperature for at least three hours before using it.
- Store ink bottles in a cool, dark place.
- Store the ink bottles in the same environment as the product. When storing or transporting an opened ink bottle, do not tilt the bottle and do not subject it to impacts or temperature changes. Otherwise, ink may leak even if the cap on the ink bottle is tightened securely. Be sure to keep the ink bottle upright when tightening the cap, and take measures to prevent ink from leaking when you transport the bottle.

Ink Bottle and Ink Tank Information

- To maintain optimum print head performance, some ink is consumed from all ink tanks during printing and when performing maintenance operations, such as cleaning the print head.
- The ink bottles may contain recycled materials, but this does not affect product function or performance.
- The specification and appearance of the ink bottles are subject to change without prior notice for improvement.
- If an ink bottle is dented, you can still use the ink. The quality and quantity of ink will not be affected.
- When printing in monochrome or grayscale, color ink may be used instead of black ink, depending on the paper type or print quality settings. This is because a mixture of color inks is used to create black.
- A reserve amount of ink remains in the tank when your product indicates that a refill is necessary.

Parent topic: Refilling Ink

Check Ink Levels

Your product and its printing software will let you know when an ink tank is low or expended.

Checking Ink Levels on Your Product
Checking Ink Levels - Windows
Checking Ink Levels - Mac
Disabling Special Offers with Windows

Parent topic: Refilling Ink

Checking Ink Levels on Your Product

To confirm the actual ink levels, visually check the ink levels in the product's ink tanks. Make sure the ink levels are above the lower lines on the ink tanks.

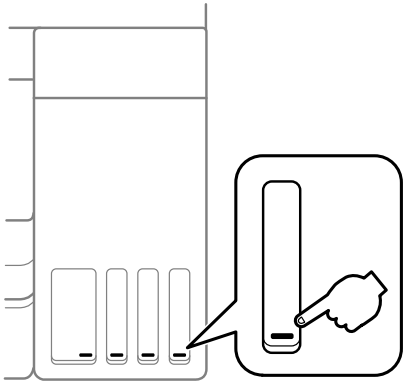

Note: The product has a low ink alert system. The accuracy of this system depends on the user refilling the ink tanks correctly. The product cannot directly measure the ink levels in the tanks; instead it estimates the amount of ink remaining by internally monitoring ink usage. The low ink alert system may generate inaccurate messages if the ink tanks are not refilled according to these instructions.

As a precaution, perform regular visual inspections of the ink tanks to ensure ink levels do not fall below the lower line. Continued use of the product when the ink level is below the lower line on the tank could damage the product.

Parent topic: Check Ink Levels

Related tasks

Refilling the Ink Tanks

Checking Ink Levels - Windows

A low ink reminder appears if you try to print when ink is low, and you can check your ink levels at any time using a utility on your Windows computer.

1. To check your ink levels, access the Windows Desktop and double-click the icon for your product in the right side of the Windows taskbar, or click the up arrow and double-click .

   You see a window like this:

2. Refill any ink tank as needed.

   Note: The ink levels displayed are an estimate and may differ from the actual ink remaining in the ink tanks. To confirm the actual remaining ink, visually check the ink levels in the ink tanks. Continued use of the product when the ink level is below the lower line on the tank could damage the product.

Parent topic: Check Ink Levels

Related tasks

Refilling the Ink Tanks

Checking Ink Levels - Mac

You can check your ink levels using a utility on your Mac.

1. In the Apple menu or the Dock, select **System Preferences**. Select **Print & Fax**, **Print & Scan**, or **Printers & Scanners**, select your product, and select **Options & Supplies**. Select **Utility** and select **Open Printer Utility**.
2. Select **EPSON Status Monitor**.

You see a window like this:

3. Refill any ink tank as needed.

   Note: To update or refresh the displayed ink levels, click **Update**.

   Note: The ink levels displayed are an estimate and may differ from the actual ink remaining in the ink tanks. To confirm the actual remaining ink, visually check the ink levels in the ink tanks. Continued use of the product when the ink level is below the lower line on the tank could damage the product.

Parent topic: Check Ink Levels

Related tasks

Refilling the Ink Tanks

Disabling Special Offers with Windows

You can disable special offers messages from Epson using a utility on your Windows computer.

1. Access the Windows Desktop and right-click the icon for your product in the right side of the Windows taskbar, or click the up arrow and right-click . Select **Monitoring Preferences**.

   You see this window:

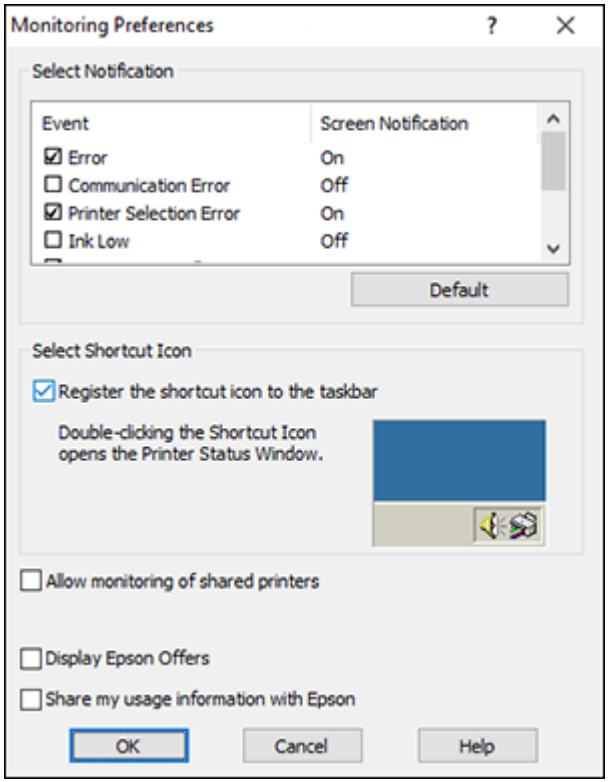

2. To disable promotional offers, deselect the **Display Epson Offers** checkbox.

Parent topic: Check Ink Levels

Purchase Epson Ink and Maintenance Box

You can purchase genuine Epson ink, maintenance boxes, and paper at epson.com (U.S. sales), epson.ca (Canadian sales), or epson.com.jm (Caribbean sales). You can also purchase supplies from an Epson authorized reseller. To find the nearest one, call 800-GO-EPSON (800-463-7766) in the U.S. or 800-807-7766 in Canada.

Note: Epson's warranties do not extend to any damage caused by the use of third-party ink or ink not designed for your printer.

The included initial ink bottles must be used for printer setup and are not for resale. The printer ships with full ink bottles and part of the ink from the first bottles is used to charge the print head. Yields vary considerably based on images printed, print settings, paper type, frequency of use and temperature.

Ink Bottle and Maintenance Box Part Numbers

Parent topic: Refilling Ink

Ink Bottle and Maintenance Box Part Numbers

Use these part numbers when you order or purchase new ink bottles or a new maintenance box. Use the ink by the date printed on the package.

Ink color	Part number
Black	502
Cyan	502
Magenta	502
Yellow	502

Maintenance box part number: T04D100

Parent topic: Purchase Epson Ink and Maintenance Box

Refilling the Ink Tanks

Make sure you have new ink bottles handy and have read the ink safety precautions before you begin.

You can continue to use the product even if one or more ink tanks are not filled all the way. However, for the most accurate ink level monitoring, fill all the ink tanks up to the top line.

Note: The product has a low ink alert system. The accuracy of this system depends on the user refilling the ink tanks correctly. The product cannot directly measure the ink levels in the tanks; instead it estimates the amount of ink remaining by internally monitoring ink usage. The low ink alert system may generate inaccurate messages if the ink tanks are not refilled according to these instructions.

As a precaution, perform regular visual inspections of the ink tanks to ensure ink levels do not fall below the lower line. Continued use of the product when the ink level is below the lower line on the tank could damage the product.

Caution: Wear disposable gloves while refilling the ink tanks to avoid staining your hands. If ink spills, wipe it off immediately with a damp towel to avoid permanent stains. If ink gets on your clothes or belongings, it may not come off.

1. Turn on your product.
2. Lift up the scanner unit.

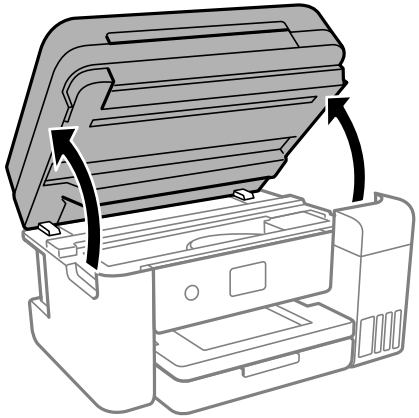

3. Open the ink tank cover, then open the cap for the ink tank you are going to fill.

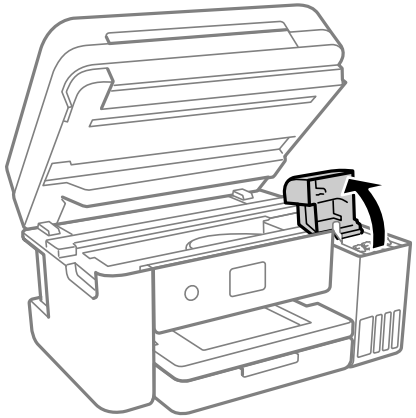

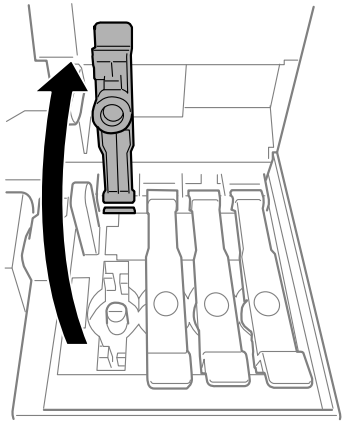

4. Hold the ink bottle upright and slowly turn the bottle cap to remove it.

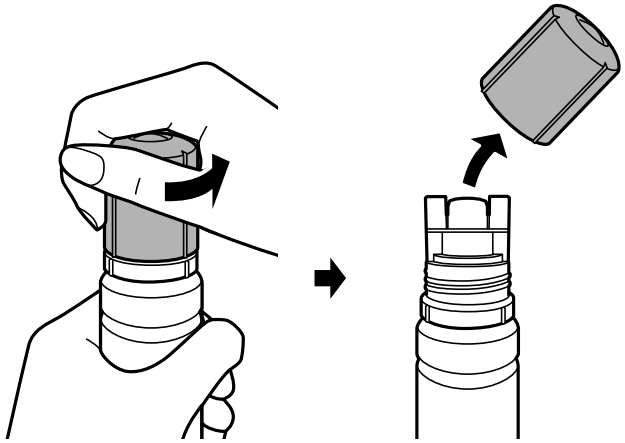

Caution: Do not shake or squeeze the bottle. Do not touch the top of the bottle after its cap is removed.

Warning: If ink gets on your skin, wash it thoroughly with soap and water. If ink gets into your eyes, flush them immediately with water. If ink gets into your mouth, spit it out immediately. Seek medical advice if problems persist. Keep the ink bottles out of the reach of children and do not drink the ink.

5. Position the top of the ink bottle along the slot in front of the filling port, then slowly stand the bottle up to insert it.

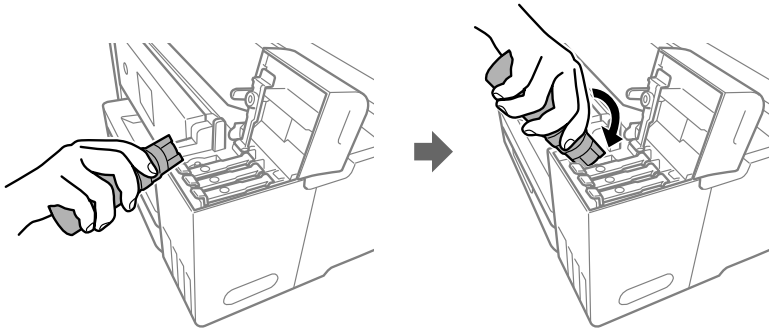

Note: Refer to the color-coded sticker on the ink tank unit to identify the color of each tank. Do not force the bottles into position; they are keyed for each color.

6. Wait for the ink to fill the tank. Do not squeeze the bottle. Ink flows into the tank and stops automatically when the ink is filled to the upper line.

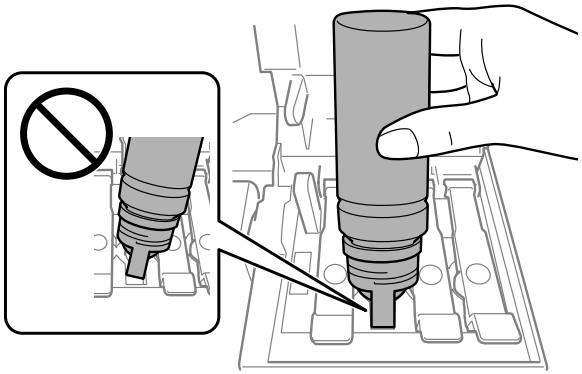

Note: If ink does not flow from the bottle, lift and reinsert the bottle.

7. When the ink tank is full, remove the ink bottle and securely close the ink tank cap.

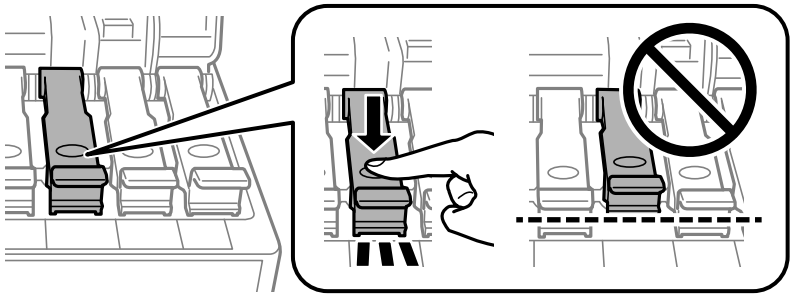

Note: If any ink remains in the bottle, replace the bottle cap and tighten it. Store the bottle upright for later use.

8. Repeat the previous steps as necessary for each ink tank you need to refill.

9. Close the ink tank cover, then close the scanner unit.

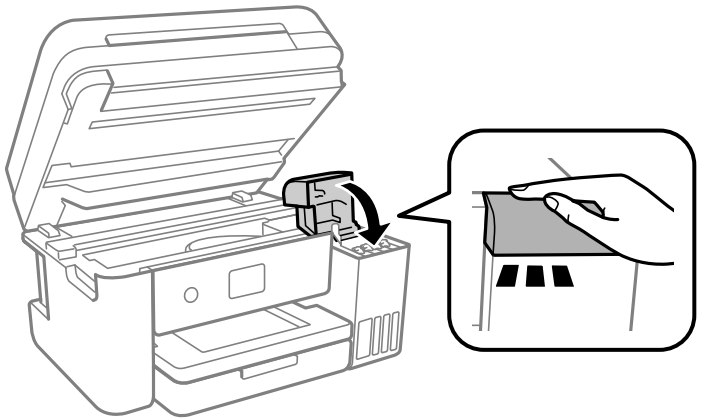

10. Follow the on-screen instructions to reset the ink level for the colors you refilled.

Parent topic: Refilling Ink

Related concepts

Purchase Epson Ink and Maintenance Box

Maintenance Box Replacement

The maintenance box stores surplus ink that gets flushed from the system during print head cleaning. When you see a message on the LCD screen, follow the on-screen instructions to replace the maintenance box.

Note the following precautions when replacing the maintenance box:

- Do not remove the maintenance box or its cover except when replacing the maintenance box.
- Do not touch the green chip on the side of the maintenance box.
- Do not tilt the maintenance box after removing it or ink may leak.
- Do not touch the openings in the maintenance box or you may get ink on you.
- Do not drop the maintenance box or subject it to strong shocks.
- If you cannot replace the cover, the maintenance box may not be installed correctly. Remove and reinstall the maintenance box.
- Do not store the maintenance box in high or freezing temperatures.

Caution: Do not reuse a maintenance box that has been removed and left uninstalled for a long period. Keep the maintenance box away from direct sunlight.

Note: The maintenance box is a user-replaceable part and is not covered by the product warranty.

Parent topic: Refilling Ink

Adjusting Print Quality

If your print quality declines, you may need to run a utility to clean or align the print head.

If running these utilities does not solve the problem, you may need to run a Power Cleaning or clean the paper or print head path.

Print Head Maintenance
Print Head Alignment
Cleaning the Paper Guide
Cleaning the Print Head Path
Checking the Number of Sheets

Print Head Maintenance

If your printouts become too light, or you see dark or light bands across them, you may need to clean the print head nozzles. Cleaning uses ink, so clean the nozzles only if print quality declines.

You can check for clogged nozzles before you clean them so you don't clean them unnecessarily.

Note: You cannot clean the print head if the ink level has reached the lower line on the ink tank, and may not be able to clean it when the ink level in any of the tanks is low. You must refill the ink tank first.

If you still see white or dark lines or gaps in your printouts, even after cleaning the print head several times, you can run a Power Cleaning.

Print Head Nozzle Check
Print Head Cleaning
Power Cleaning

Parent topic: Adjusting Print Quality

Related tasks
Refilling the Ink Tanks

Print Head Nozzle Check

You can print a nozzle check pattern to check for clogged nozzles.

Checking the Nozzles Using the Product Control Panel
Checking the Nozzles Using a Computer Utility

Parent topic: Print Head Maintenance

Checking the Nozzles Using the Product Control Panel

You can check the print head nozzles using the control panel on your product.

1. Make sure there are no errors on the LCD screen and the output tray is extended.
2. Load a few sheets of plain paper in the product.
3. Press the home button, if necessary.
4. Select **Maintenance**.

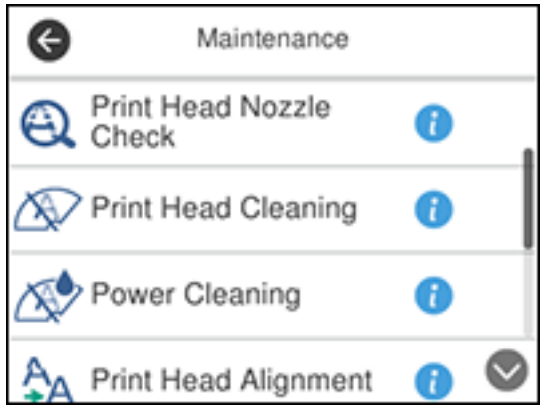

5. Select **Print Head Nozzle Check**.

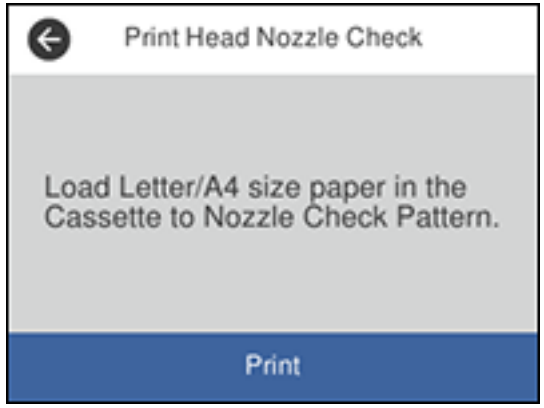

6. Select **Print**.

   The nozzle check pattern is printed.

7. Check the printed pattern to see if there are gaps in the lines.

   Print head is clean

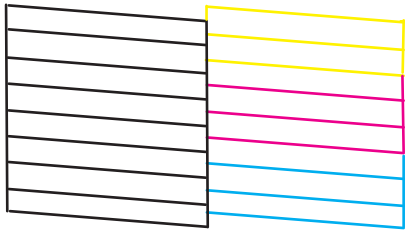

   Print head needs cleaning

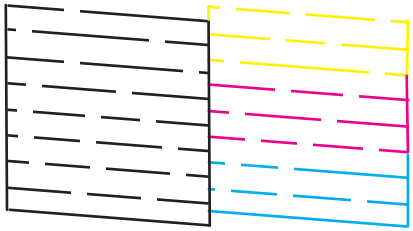

8. Do one of the following:
   - If there are no gaps, the print head is clean. Select **O**.
   - If there are gaps or the pattern is faint, select **X**. Follow the instructions on the screen to clean the print head.

If you don't see any improvement after cleaning the print head up to 3 times, turn the product off and wait at least 12 hours. Then try cleaning the print head again. If quality still does not improve, run a Power Cleaning. If there is still no improvement, contact Epson support.

Parent topic: Print Head Nozzle Check

Related tasks

Refilling the Ink Tanks

Cleaning the Print Head Using the Product Control Panel

Loading Paper in the Cassette

Checking the Nozzles Using a Computer Utility

You can check the print head nozzles using a utility on your Windows or Mac computer.

1. Load a few sheets of plain paper in the product.
2. Do one of the following:
   - **Windows:** Access the Windows Desktop and right-click the icon for your product in the right side of the Windows taskbar, or click the up arrow and right-click .
   - **Mac**: In the Apple menu or the Dock, select **System Preferences**. Select **Print & Fax**, **Print & Scan**, or **Printers & Scanners**, select your product, and select **Options & Supplies**. Select **Utility** and select **Open Printer Utility**.
3. Select **Nozzle Check**.

   You see a window like this:

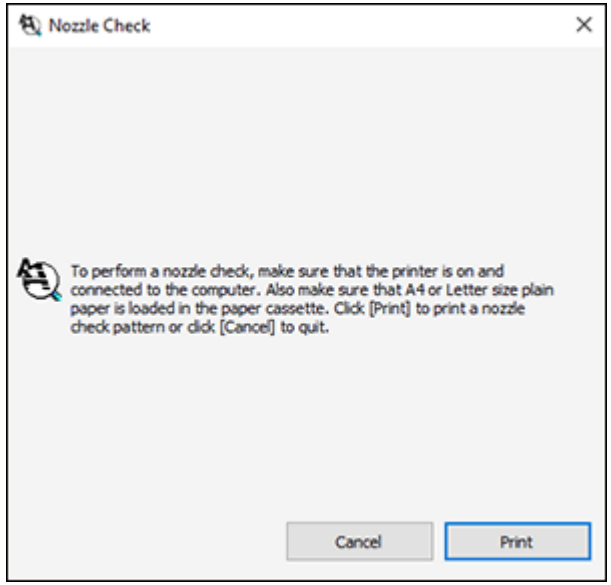

4. Click **Print**.

5. Check the printed pattern to see if there are gaps in the lines.

Print head is clean

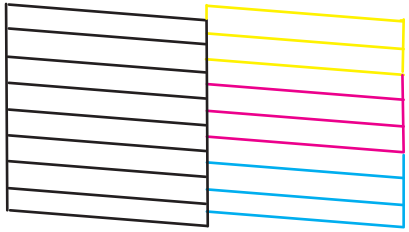

Print head needs cleaning

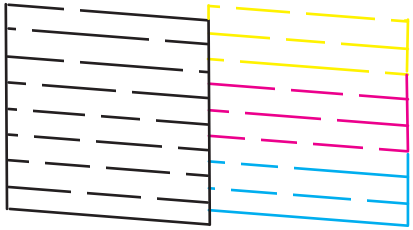

6. If there are no gaps, click **Finish**.

   If there are gaps or the pattern is faint, clean the print head.

Parent topic: Print Head Nozzle Check

Related tasks

Refilling the Ink Tanks

Cleaning the Print Head Using a Computer Utility

Cleaning the Print Head Using a Computer Utility

Loading Paper in the Cassette

Print Head Cleaning

If print quality has declined and the nozzle check pattern indicates clogged nozzles, you can clean the print head.

Note: You cannot clean the print head if the ink level has reached the lower line on the ink tank, and may not be able to clean it when the ink level in any of the tanks is low. You must refill the ink tank first.

Cleaning the Print Head Using the Product Control Panel
Cleaning the Print Head Using a Computer Utility

Parent topic: Print Head Maintenance

Related tasks
Refilling the Ink Tanks

Cleaning the Print Head Using the Product Control Panel

You can clean the print head nozzles using the control panel on your product.

1. Make sure there are no errors on the LCD screen and the output tray is extended.
2. Load a few sheets of plain paper in the product.
3. Press the ⌂ home button, if necessary.
4. Select **Maintenance**.

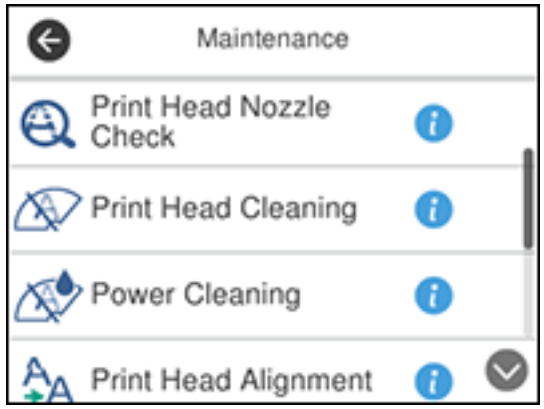

5. Select **Head Cleaning**.

6. Select **Start** to clean the print head. You see a message on the LCD screen during the cleaning cycle.

   Caution: Never turn off the product or open the printer cover during a cleaning cycle or you may not be able to print.

   When the cleaning cycle is finished, you see a message on the LCD screen.
7. Select **Check**.
8. Select **Print** to run a nozzle check and confirm that the print head is clean.

If you don't see any improvement after cleaning the print head up to 3 times, turn off the product and wait at least 12 hours. Then try cleaning the print head again. If quality still does not improve, run a Power Cleaning. If there is still no improvement, contact Epson support.

Parent topic: Print Head Cleaning

Related references

Where to Get Help

Related tasks

Refilling the Ink Tanks

Checking the Nozzles Using the Product Control Panel

Loading Paper in the Cassette

Cleaning the Print Head Using a Computer Utility

You can clean the print head using a utility on your Windows or Mac computer.

1. Make sure there are no errors on the LCD screen and the output tray is extended.
2. Load a few sheets of plain paper in the product.
3. Do one of the following:
   - **Windows:** Access the Windows Desktop and right-click the icon for your product in the right side of the Windows taskbar, or click the up arrow and right-click .
   - **Mac**: In the Apple menu or the Dock, select **System Preferences**. Select **Print & Fax**, **Print & Scan**, or **Printers & Scanners**, select your product, and select **Options & Supplies**. Select **Utility** and select **Open Printer Utility**.
4. Select **Head Cleaning**.

   You see a window like this:

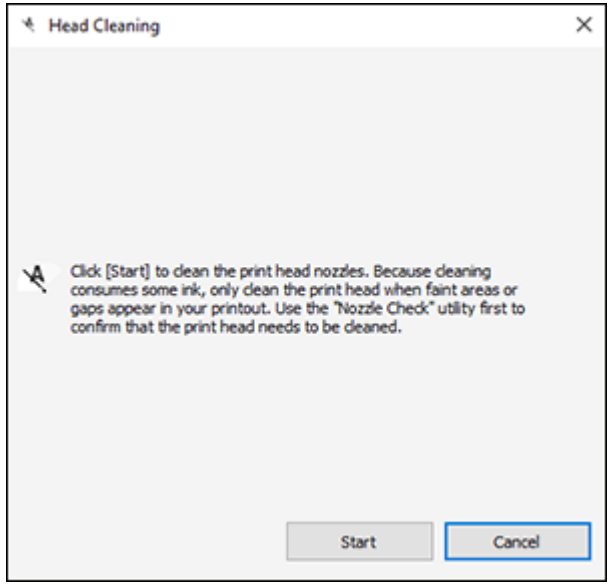

5. Click **Start** to begin the cleaning cycle.

   The ⏻ power light flashes throughout the cleaning cycle and stays on when the cleaning cycle is finished.

Caution: Never turn off the product or open the printer cover during a cleaning cycle or you may not be able to print.

6. When the cleaning cycle is finished, you can check to see if the nozzles are clean; click **Print Nozzle Check Pattern** and click **Print**.
7. Check the printed pattern to see if there are gaps in the lines.

Print head is clean

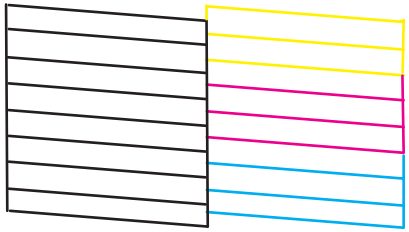

Print head needs cleaning

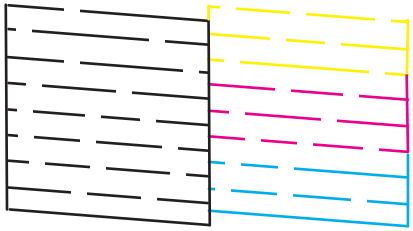

- If there are no gaps, click **Finish**.
- If there are gaps or the pattern is faint, click **Clean** to clean the print head again.

If you don't see any improvement after cleaning the print head up to 3 times, turn off the product and wait at least 12 hours. Then try cleaning the print head again. If quality still does not improve, run a Power Cleaning. If there is still no improvement, contact Epson support.

Parent topic: Print Head Cleaning

Related references

Where to Get Help

Related tasks

Refilling the Ink Tanks

Loading Paper in the Cassette

Power Cleaning

If you still see white or dark lines or missing nozzles in your printouts, even after cleaning the print head several times, you can run a Power Cleaning.

If you do not see improvement after running a Power Cleaning, turn off the product and wait at least 12 hours before running another Power Cleaning.

Caution: Running a Power Cleaning consumes a lot of ink, so you should run it only if necessary. Make sure each ink tank is at least one-third full before running a Power Cleaning, or it may damage the product.

Caution: Power Cleaning may cause the ink pads to reach their capacity sooner. When an ink pad reaches the end of its service life, the product stops printing and you must contact Epson for support.

Power Cleaning Using the Product Control Panel

Power Cleaning Using a Computer Utility

Parent topic: Print Head Maintenance

Related tasks

Refilling the Ink Tanks

Power Cleaning Using the Product Control Panel

You can run a Power Cleaning using the control panel on your product.

After a Power Cleaning, you must turn off the product and wait at least 12 hours before running another Power Cleaning.

1. Turn off the product.
2. Visually check the ink levels and make sure each ink tank is at least one-third full.

   Caution: If you run a Power Cleaning when the ink levels are low, you may damage the product.

3. Press and hold the ⏻ power button and the ⓘ help button at the same time until the Power Cleaning screen appears on the LCD screen.
4. Follow the on-screen instructions to run the Power Cleaning.

5. When the Power Cleaning is finished, run a nozzle check.

   If the print quality did not improve, turn off the printer and wait at least 12 hours before running another Power Cleaning.

   If the print quality does not improve after running the Power Cleaning utility multiple times, contact Epson for support.

Parent topic: Power Cleaning

Related tasks

Refilling the Ink Tanks

Power Cleaning Using a Computer Utility

You can run a Power Cleaning using a utility on your Windows or Mac computer.

Note: After running a Power Cleaning, you must turn off the product and wait at least 12 hours before running another Power Cleaning.

1. Make sure there are no errors on the LCD screen and the output tray is extended.
2. Do one of the following:
   - **Windows**: Access the Windows Desktop and right-click the icon for your product in the right side of the Windows taskbar, or click the up arrow and right-click . Select **Printer Settings** and click the **Maintenance** tab.
   - **Mac**: In the Apple menu or the Dock, select **System Preferences**. Select **Print & Fax**, **Print & Scan**, or **Printers & Scanners**, select your product, and select **Options & Supplies**. Select **Utility** and select **Open Printer Utility**.
3. Select **Power Cleaning**.

You see a window like this:

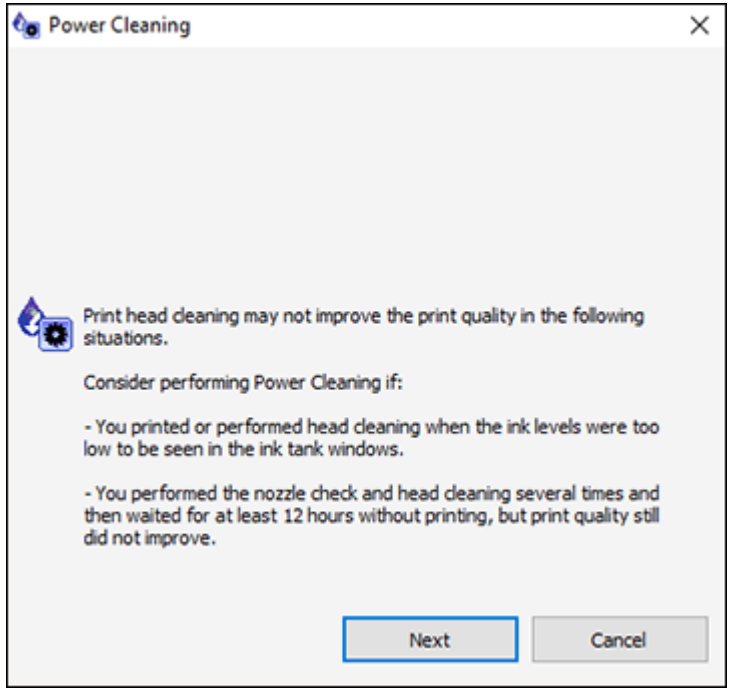

4. Follow the on-screen instructions to run a Power Cleaning.
5. When Power Cleaning is finished, run a nozzle check.

If the print quality did not improve, turn off the product and wait at least 12 hours before running another Power Cleaning.

If the print quality does not improve after running the Power Cleaning utility multiple times, contact Epson for support.

Parent topic: Power Cleaning

Related tasks

Refilling the Ink Tanks

Print Head Alignment

If your printouts become grainy or blurry, you notice misalignment of vertical lines, or you see dark or light horizontal bands, you may need to align the print head.

Note: Banding may also occur if your print head nozzles need cleaning.

Aligning the Print Head Using the Product Control Panel

Parent topic: Adjusting Print Quality

Aligning the Print Head Using the Product Control Panel

You can align the print head using the control panel on your product.

1. Make sure there are no errors on the LCD screen and the output tray is extended.
2. Load a few sheets of plain paper in the product.
3. Press the ⌂ home button, if necessary.
4. Select **Maintenance**.

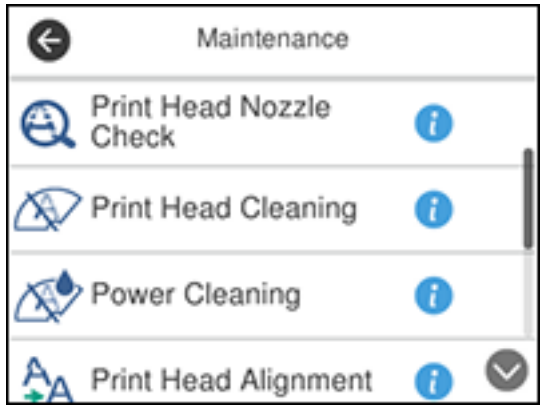

5. Select **Print Head Alignment**.
6. Select one of the following options:
   - **Ruled Line Alignment** if straight lines are slanted or misaligned.
   - **Vertical Alignment** if there are vertical gaps or lines in patterned areas.

- **Horizontal Alignment** if adjacent horizontal regions are overlapped or separated.

7. Select **Print** to print an alignment sheet.

   Note: Do not cancel printing while you are printing a head alignment pattern.

8. Check the printed pattern and select the number representing the most solid printed pattern for each set on the LCD screen.

   Ruled Line Alignment

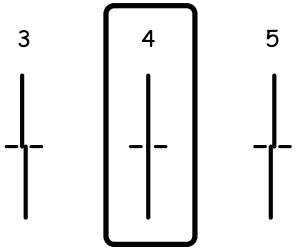

   Vertical Alignment

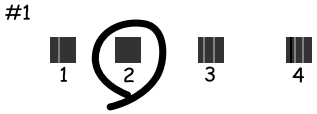

   Horizontal Alignment

9. Select **OK** when you are finished.

Parent topic: Print Head Alignment

Related tasks

Loading Paper in the Cassette

Cleaning the Paper Guide

If you see ink on the back of a printout, you can clean the paper guide rollers to remove any excess ink.

1. If printouts are smeared or scuffed, load plain paper in the cassette in this size: Letter (8.5 × 11 inches [216 × 279 mm]) or A4 (8.3 × 11.7 inches [210 × 297 mm]).
2. Select **Maintenance**.

   You see a screen like this:

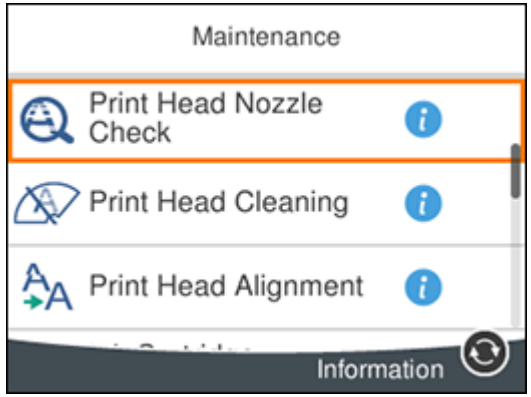

3. Scroll down and select **Paper Guide Cleaning**.
4. Follow the on-screen instructions to clean the paper guide.
5. Repeat these steps as necessary until the paper comes out clean.

Parent topic: Adjusting Print Quality

Related concepts

Print Head Cleaning

Print Head Alignment

Related tasks

Cleaning the Print Head Using a Computer Utility

Loading Paper in the Cassette

Cleaning the Print Head Path

If the print quality has not improved after cleaning and aligning the print head and cleaning the paper path, the print head path inside the printer may be smeared with ink.

To clean the print head path, use the following:

- Several cotton swabs
- ¼ cup (59 ml) water containing 2 to 3 drops of mild dish detergent
- A small flashlight

Caution: Do not use any other liquid to clean the print head path or you may damage your product.

1. Turn off the product.
2. Unplug the power cable.
3. Disconnect any connected cables.
4. Lift up the scanner unit.

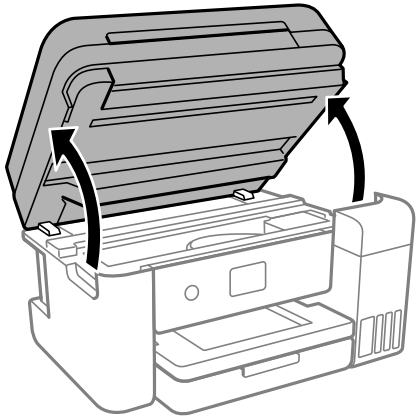

5. Using the flashlight, check the translucent film shown here for ink smears.

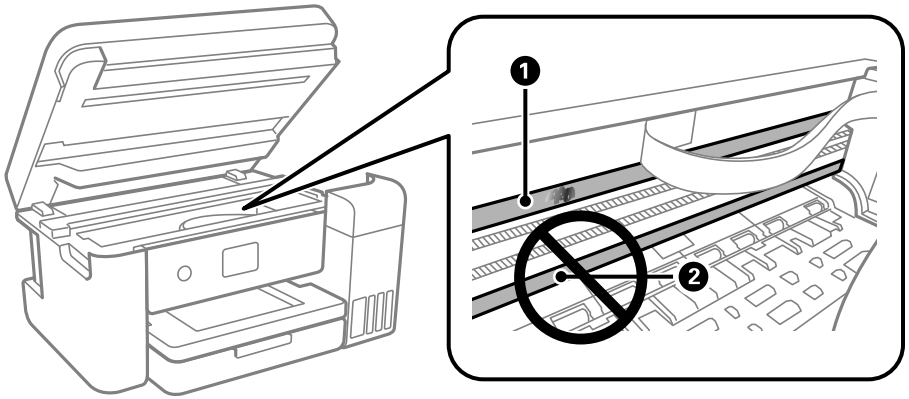

1	Translucent film
2	Print head rail

Caution: Do not touch the print head rail or wipe the grease off of it. You may not be able to print.

6. Moisten a cotton swab with the water and detergent mixture, and squeeze out any excess moisture. Lightly wipe the ink off the translucent film.

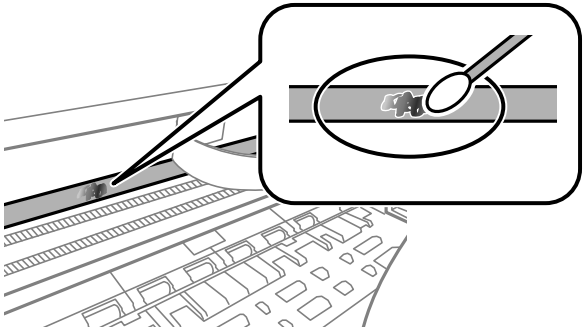

Caution: Do not press too hard on the film or you may dislocate the anchor springs and damage your product.

7. Use a new, dry cotton swab to dry the translucent film.
8. Repeat steps 6 and 7 as necessary to clean all ink smears.
9. When the translucent film is dry, close the scanner unit.
10. Reconnect any disconnected cables, plug in the power cord, and turn on the product.

Parent topic: Adjusting Print Quality

Related concepts

Print Head Cleaning
Print Head Alignment

Related tasks

Cleaning the Print Head Using a Computer Utility

Checking the Number of Sheets

You can view an option that displays the number of sheets of paper that have fed through the product.

Note: You can also view the number of sheets of paper fed through the product by printing a nozzle check.

Checking the Sheet Counter - Windows
Checking the Sheet Counter - Mac

Parent topic: Adjusting Print Quality

Checking the Sheet Counter - Windows

You can check the number of sheets of paper that have fed through the product by checking the sheet counter.

1. Access the Windows Desktop and right-click the icon for your product in the right side of the Windows taskbar, or click the up arrow and right-click .
2. Select **Printer Settings**.
3. Click the **Maintenance** tab.
4. Select **Printer and Option Information**.

You see this window:

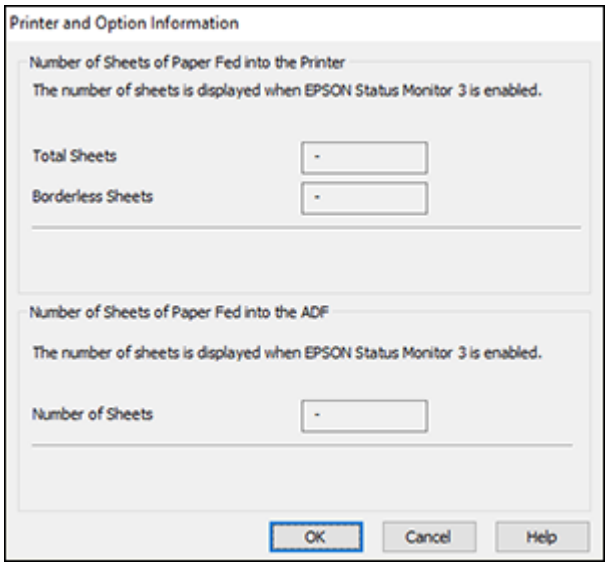

5. After checking the number of sheets fed into the printer, click **OK** to close the window.

   Note: The number of sheets is displayed only when Epson Status Monitor 3 is enabled.

Parent topic: Checking the Number of Sheets

Checking the Sheet Counter - Mac

You can check the number of sheets of paper that have fed through the product by checking the sheet counter.

1. In the Apple menu or the Dock, select **System Preferences**. Select **Print & Fax**, **Print & Scan**, or **Printers & Scanners**, select your product, and select **Options & Supplies**. Select **Utility** and select **Open Printer Utility**.
2. Select **Printer and Option Information**.

You see this window:

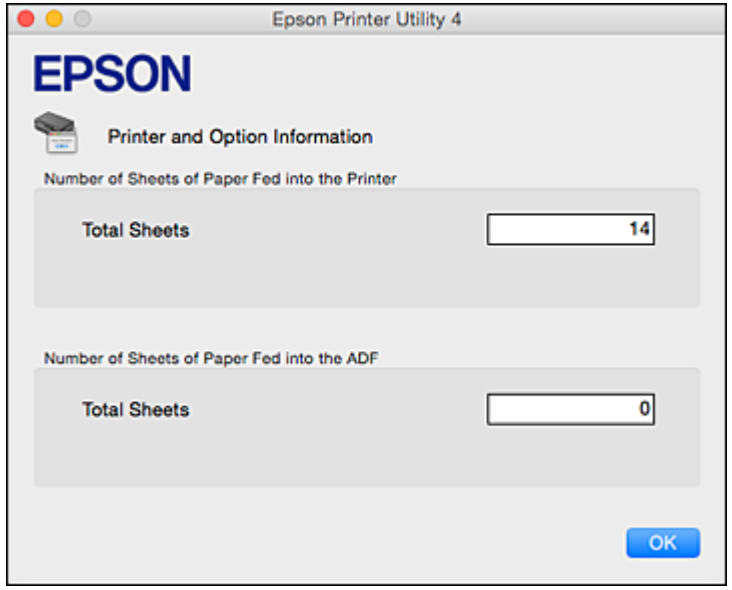

3. After checking the number of sheets fed into the printer, click **OK** to close the window.

Parent topic: Checking the Number of Sheets

Cleaning and Transporting Your Product

See these sections if you need to clean or transport your product.

Cleaning Your Product
Cleaning the Paper Rollers
Transporting Your Product

Cleaning Your Product

To keep your product working at its best, you should clean it several times a year.

Caution: Do not use a hard brush, alcohol, or paint thinner to clean the product or you may damage it. Do not use oil or other lubricants inside the product or let water get inside it.

1. Turn off the product.
2. Unplug the power cord.
3. Disconnect any connected cables.
4. Pull out the paper cassette and remove the paper.
5. Open the document cover.

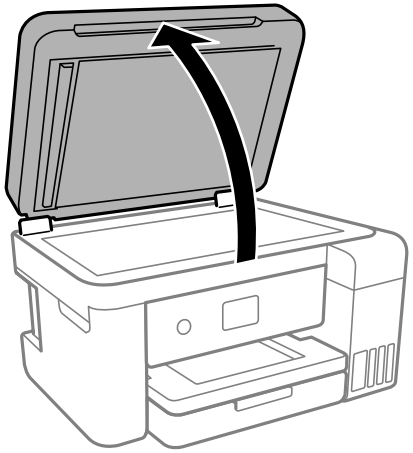

6. Clean the scanner glass and the glass area on the left with a soft, lint-free cloth (microfiber is recommended) moistened with a little glass cleaner.

   Caution: Do not spray glass cleaner directly on the glass and do not press the glass surface with any force.

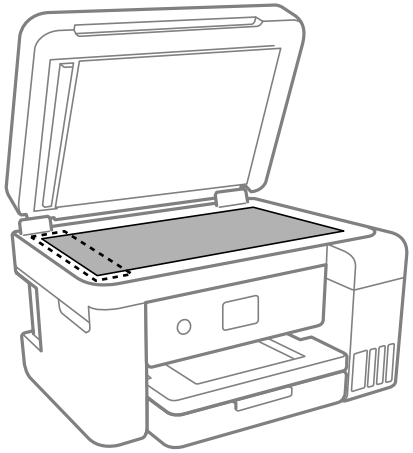

7. Close the document cover.

8. Open the ADF cover.
9. Use a soft, dry, lint-free cloth (microfiber is recommended) to clean the rollers and the interior of the ADF.

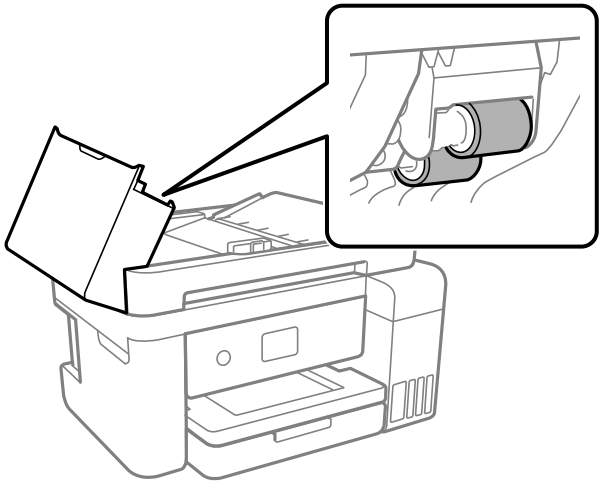

10. Clean the outer case and control panel with a soft, dry cloth. Do not use liquid or chemical cleansers.

Parent topic: Cleaning and Transporting Your Product

Cleaning the Paper Rollers

If you encounter repeated paper feed issues from the cassette, clean the paper rollers inside the product.

1. Turn off the product.
2. Unplug the power cable.
3. Disconnect any connected cables.

4. Slide out the paper cassette and remove the paper.

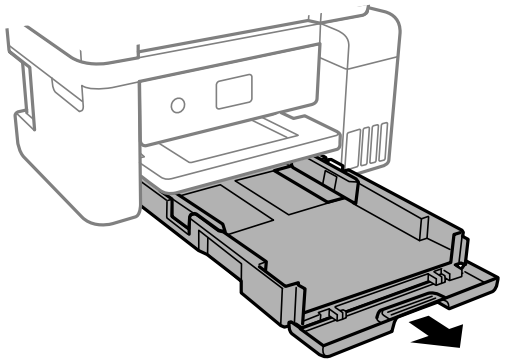

5. Make sure the ink tank caps are securely closed.

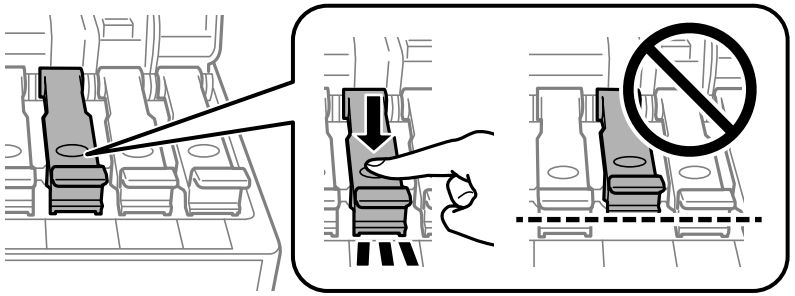

6. Place the product on its side with the ink tank on the bottom.

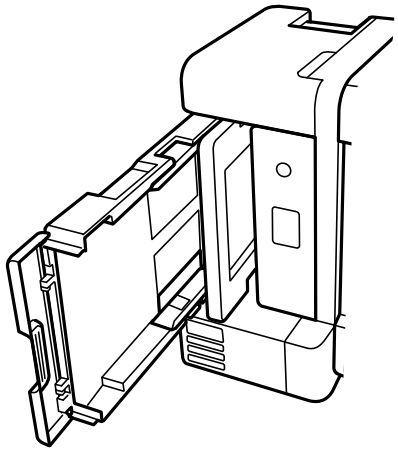

Warning: Be careful not to trap your fingers under the product.

7. Use a soft, moist cloth to clean the paper rollers, as shown. Rotate the rollers to clean them thoroughly.

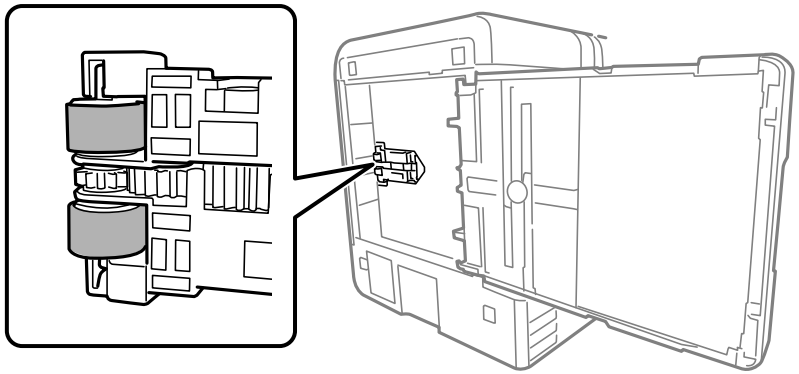

8. Return the product to its normal position.

Caution: Do not leave the printer on its side for an extended period of time.

9. Replace the paper, slide in the paper cassette, and connect the power cord.

Parent topic: Cleaning and Transporting Your Product

Transporting Your Product

If you need to store your product or transport it some distance, prepare it for transportation as described here.

Caution: During transportation and storage, follow these guidelines:

- Avoid tilting the product, placing it vertically, or turning it upside down; otherwise ink may leak.

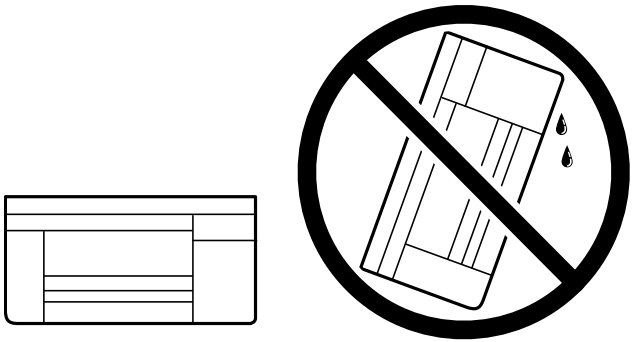

- When storing or transporting an opened ink bottle, do not tilt the bottle and do not subject it to impacts or temperature changes. Otherwise, ink may leak even if the cap on the ink bottle is tightened securely. Keep the ink bottle upright when tightening the cap and keep the bottles level during transportation.
- Do not put opened ink bottles in the box with the product.
- Do not carry the product by its control panel; this may damage the product.

1. Turn off the product.
2. Remove all the paper from the product.
3. Unplug the power cable.
4. Disconnect any connected cables.

5. Lift up the scanner unit and check to see if the print head is in the far right position (the home position). If not, turn on the product, wait for the print head to move to the far right, then turn the product off again.

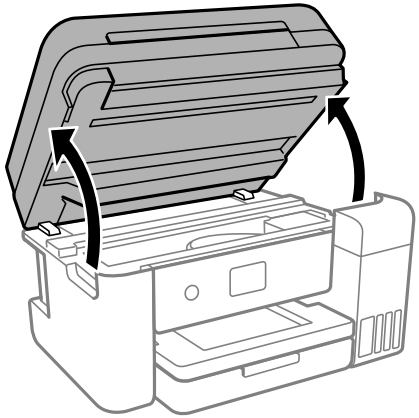

6. Secure the print head to the case with tape.

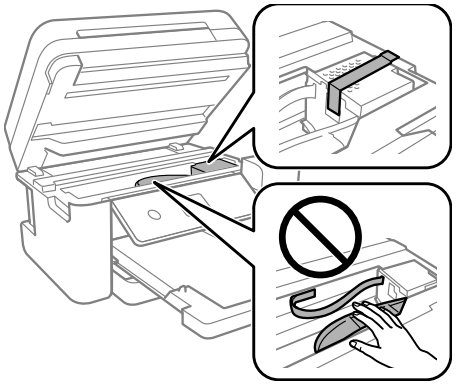

Caution: Do not place tape on the white flat cable inside the product; otherwise, you may damage your product.

7. Make sure the ink tank caps are securely closed and close the ink tank cover.

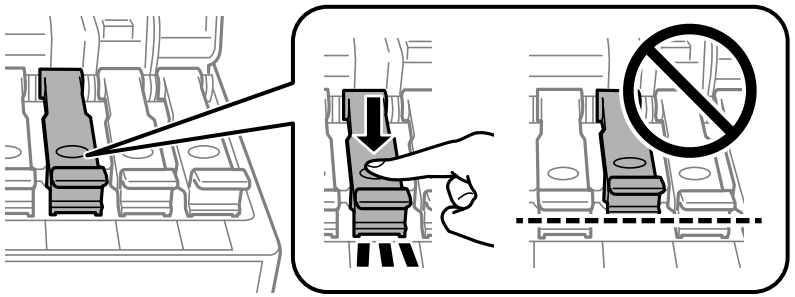

8. Lower the scanner unit.

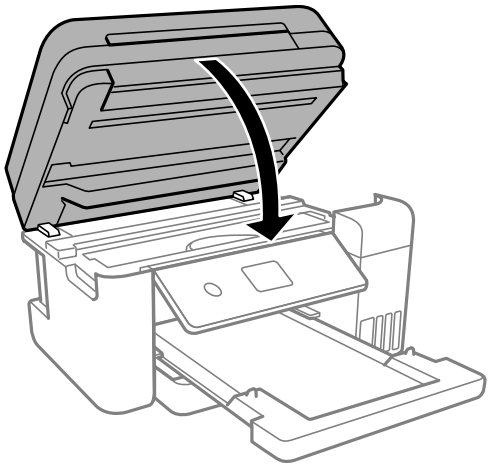

9. Close the ADF document support and the ADF output tray extension. Slide in the output tray, close the front cover, and lower the control panel.

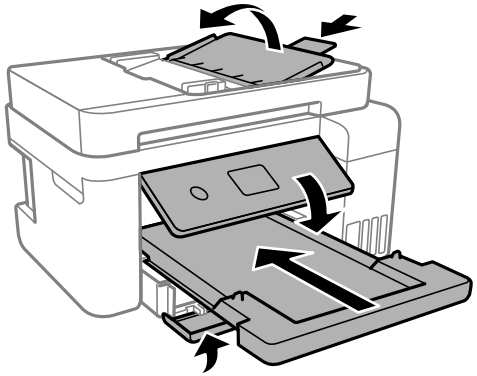

10. Place the product in its original packaging materials, if possible, or use equivalent cushioning around the product.

Be sure to remove the tape from the print head before turning on your product. If print quality has declined when you print again, clean and align the print head.

Parent topic: Cleaning and Transporting Your Product

Related concepts

Print Head Cleaning

Print Head Alignment

Solving Problems

Check these sections for solutions to problems you may have using your product.

Checking for Software Updates
Product Status Messages
Message Appears Prompting You to Reset Ink Levels
Running a Product Check
Resetting Control Panel Defaults
Solving Setup Problems
Solving Network Problems
Solving Copying Problems
Solving Paper Problems
Solving Problems Printing from a Computer
Solving Page Layout and Content Problems
Solving Print Quality Problems
Solving Scanning Problems
Solving Scanned Image Quality Problems
Solving Faxing Problems
Uninstall Your Product Software
Where to Get Help

Checking for Software Updates

It's a good idea to check Epson's support website occasionally for free updates to your product software. Visit epson.com/support (U.S.), epson.ca/support (Canada), or epson.com.jm/support (Caribbean) and select your product.

- **Windows**: Your printer software automatically checks for updates. You can also manually update the software by selecting **Software Update** here:
  - Accessing the Windows Desktop and right-clicking the icon for your product in the right side of the Windows taskbar, or clicking the up arrow and right-clicking .
  - On the **Maintenance** tab in the printer settings window

You can also update the software by selecting **EPSON Software Updater** in the **EPSON** or **EPSON Software** program group, accessible by the **Start** button, or on the **Start** or **Apps** screens, depending on your version of Windows.

- **OS X**: You can manually update the software by opening the **Applications** > **Epson Software** folder and selecting **EPSON Software Updater**.
- **macOS 10.12.x or 10.13.x**: You can manually update the software by opening the **App Store**, selecting **Updates**, searching for a software update option for Epson Software, and selecting **Update**.

Parent topic: Solving Problems

Product Status Messages

You can often diagnose problems with your product by checking the messages on its LCD screen. You can also see help information and how-to instructions on the screen. Press the ⌂ home button, if necessary, select the ⓘ help button.

LCD screen message	Condition/solution
Printer error. Turn on the printer again. See your documentation for details.	A fatal error has occurred. Turn the product off and then back on again. If the error continues, check for a paper jam. If there is no paper jam, contact Epson for support.
Paper out in XX.	Load paper in the specified cassette.
Paper Setup Auto Display is set to Off. Some features may not be available. For details, see your documentation.	The **Paper Setup Auto Display** setting must be turned on to use AirPrint.
No dial tone is detected.	Make sure the phone cable is connected correctly and the phone line works. If you connected the product to a PBX (Private Branch Exchange) phone line or Terminal Adapter, change the **Line Type** setting to **PBX**. If you still cannot send a fax, turn off the **Dial Tone Detection** setting. (Turning off the Dial Tone Detection setting may cause the product to drop the first digit of a fax number.)

LCD screen message	Condition/solution
The printer's borderless printing ink pad is nearing the end of its service life. It is not a user-replaceable part. Please contact Epson support.	The ink pad is near the end of its service life and the message will be displayed until the ink pad is replaced. Contact Epson for support. (To resume printing, press the ◇ start button.)
The printer's borderless printing ink pad has reached the end of its service life. It is not a user-replaceable part. Please contact Epson support.	The ink pad is at the end of its service life. Turn off the product and contact Epson for support. You can still perform operations that do not use ink, such as scanning.
To use cloud services, update the root certificate from the Epson Web Config utility.	Access your product's built-in Web Config utility and update the root certificate for your product.
The combination of IP address and the subnet mask is invalid. See your documentation for more details.	There is a problem with the network connection to your product. Check the solutions in this guide.
Check that the printer driver is installed on the computer and that the port settings for the printer are correct.	Make sure the printer port is selected correctly on the **Port** tab of the Printer Properties screen (Windows) or the **System Properties** > **USB** list (Mac). Select USBXXX for a USB connection or **EpsonNet Print Port** for a network connection.
Check that the printer driver is installed on the computer and that the USB port settings for the printer are correct.	

LCD screen message	Condition/solution
Recovery mode	An error has occurred during firmware updating. Connect your product using a USB cable and try updating the firmware again. If you still receive this error message, contact Epson for support.

Note: The ink pads in the printer collect, distribute, and contain the ink that is not used on printed pages. During the life of your product it may reach a condition where either satisfactory print quality cannot be maintained or the ink pads have reached the end of their usable life. The Epson Status Monitor, your LCD screen, or lights on the control panel will advise you when these parts need replacing. If this happens during the standard warranty of the product, the exchange of the product or replacement of the pads is covered under the standard warranty. If the product is out of warranty, the pads can be replaced by any Epson authorized service provider. The waste ink pads are not a user-replaceable part.

Parent topic: Solving Problems

Related references

Where to Get Help

Related tasks

Checking for Software Updates

Connecting a Telephone or Answering Machine

Accessing the Web Config Utility

Printing a Network Connection Report

Related topics

Wi-Fi or Wired Networking

Solving Paper Problems

Loading Paper

Message Appears Prompting You to Reset Ink Levels

If you see a message on the LCD screen prompting you to reset the ink levels, do the following:

1. Refill all of the ink tanks or the ink tanks indicated on the LCD screen all the way to the top.

   Note: Depending on the operating conditions, you may see the ink reset message even when there is still ink in the tanks.

2. Select the colors that you refilled on the LCD screen.

3. Follow the instructions on the LCD screen to reset the ink levels.

Note: The product has a low ink alert system. The accuracy of this system depends on the user refilling the ink tanks correctly. The product cannot directly measure the ink levels in the tanks; instead it estimates the amount of ink remaining by internally monitoring ink usage. The low ink alert system may generate inaccurate messages if the ink tanks are not refilled according to these instructions.

As a precaution, perform regular visual inspections of the ink tanks to ensure ink levels do not fall below the lower line. Continued use of the product when the ink level is below the lower line on the tank could damage the product.

Parent topic: Solving Problems

Running a Product Check

Running a product check helps you determine if your product is operating properly.

1. Disconnect any interface cables connected to your product.
2. Load plain paper in the product.
3. Press the ⌂ home button, if necessary.
4. Select **Maintenance**.

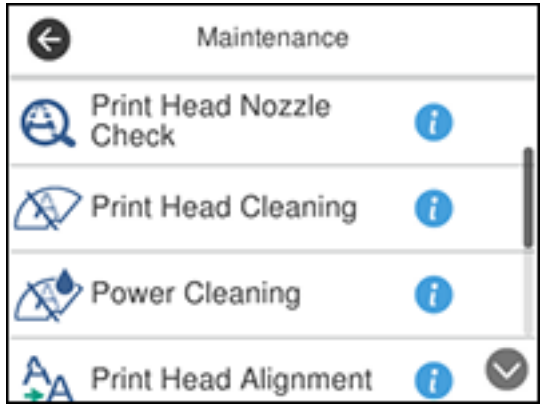

5. Select **Print Head Nozzle Check**.

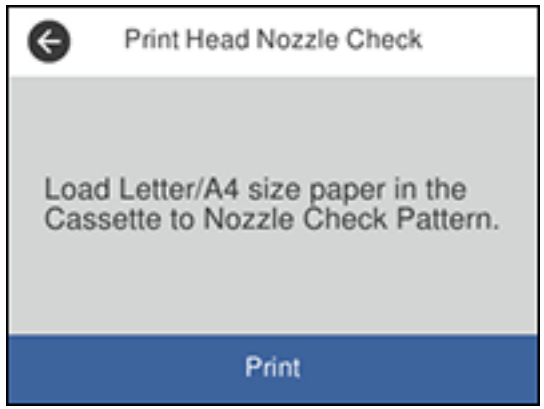

6. Select **Print**.

   The nozzle check pattern is printed.

7. Do one of the following, depending on the results of the product check:
   - If the page prints and the nozzle check pattern is complete, the product is operating properly. Any operation problem you may have could be caused by your computer, cable, software, or selected settings. Check the other solutions in this book or try uninstalling and reinstalling your printer software.
   - If the page prints but the nozzle check pattern has gaps, clean or align the print head.
   - If the page does not print, the product may have a problem. Check the other solutions in this manual. If they do not work, contact Epson.

Parent topic: Solving Problems

Related concepts

Print Head Cleaning

Print Head Alignment

Uninstall Your Product Software

Related references

Where to Get Help

Resetting Control Panel Defaults

If you have a problem with settings on the product control panel, you can reset them to their factory defaults. You can choose which settings to reset or reset them all.

1. Press the ⌂ home button, if necessary.
2. Select **Settings**.
3. Select **Restore Default Settings**.

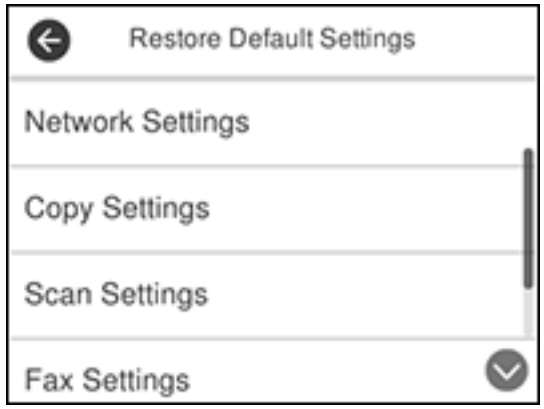

4. Select one of these options:
   - **Network Settings**: Resets all network settings.
   - **Copy Settings**: Resets all copy settings.
   - **Scan Settings**: Resets all scan settings.
   - **Fax Settings**: Resets all fax settings.
   - **Clear All Data and Settings**: Resets all control panel settings and deletes any stored information.

   You see a confirmation screen.
5. Select **Yes** to reset the selected settings. (Select **No** if you want to cancel the operation.)

Parent topic: Solving Problems

Solving Setup Problems

Check these sections if you have problems while setting up your product.

Noise After Filling the Ink
Software Installation Problems
Control Panel Setup Problems

Parent topic: Solving Problems

Noise After Filling the Ink

If you hear noises from your product after filling the ink tanks with ink, check these explanations:

- The first time you fill the tanks with ink, the product must charge its print head. Wait until charging finishes before you turn off the product, or it may charge improperly and use excess ink the next time you turn it on. Your product is finished charging the print head when the ⏻ power light stops flashing.
- If the product's print head stops moving or making noise, and the charging process has not finished after approximately 20 minutes, turn off your product. Turn it back on and check to see if charging is still in progress. If it is still in progress, contact Epson for help.

Parent topic: Solving Setup Problems

Software Installation Problems

If you have problems while installing your product software, try these solutions:

- Make sure your product is turned on and any necessary cables are securely connected at both ends. If you still have problems installing software, disconnect the cable and carefully follow the instructions on the *Start Here* sheet. Also make sure your system meets the requirements for your operating system.
- Close any other programs, including screen savers and virus protection software, and install your product software again.
- In Windows, make sure your product is selected as the default printer and the correct port is shown in the printer properties.
- If you see any error message or your software does not install correctly in Windows, you may not have software installation privileges. Contact your system administrator.

Parent topic: Solving Setup Problems

Related concepts

Uninstall Your Product Software

Related references

Windows System Requirements
Mac System Requirements

Control Panel Setup Problems

If you have problems setting up the control panel, try these solutions:

- To view LCD screen text in a different language, select a different language setting for the panel.
- To adjust the position of the control panel, carefully raise or lower it.

Parent topic: Solving Setup Problems

Related tasks

Changing LCD Screen Language

Adjusting Control Panel Sounds

Solving Network Problems

Check these solutions if you have problems setting up or using your product on a network.

Note: Breakdown or repair of this product may cause loss of fax and network data and settings. Epson is not responsible for backing up or recovering data and settings during or after the warranty period. We recommend that you make your own backup or print out your fax and network data and settings.

Product Cannot Connect to a Wireless Router or Access Point

Network Software Cannot Find Product on a Network

Product Does Not Appear in Mac Printer Window

Wireless Network Connection is Unstable on a Mac

Cannot Print Over a Network

Cannot Scan Over a Network

Parent topic: Solving Problems

Product Cannot Connect to a Wireless Router or Access Point

If your product has trouble finding or connecting to a wireless router or access point, try these solutions:

- If you are connecting the product via Wi-Fi Protected Setup (WPS) and the Wi-Fi icon on your product's LCD screen is not lit or does not appear, make sure you select one of the WPS options from the product control panel within 2 minutes of pressing the WPS button on your router.
- Make sure to place your product within contact range of your 2.4 GHz router or access point. Avoid placing your product near a microwave oven, 2.4 GHz cordless phone, or large metal object, such as a filing cabinet.

Note: If you are using a 5 GHz wireless router, set the router to operate in dual band (2.4 GHz and 5 GHz) mode. If your router uses a single network name (SSID) for both the 2.4 GHz and 5 GHz band, give each band its own network name (SSID) instead, such as Home Network 2.4 GHz and Home Network 5 GHz. See your router documentation or contact your internet service provider for instructions.

- Verify that your router or access point is operating correctly by connecting to it from your computer or another device.
- Print a network connection report and check the codes and messages on the report to help determine the cause of the problem.
- You may need to disable the firewall and any anti-virus software on your wireless router or access point.
- Try restarting your router following the instructions in your router documentation.

  Note: If you are reading these instructions online, you will lose your Internet connection when you restart your router.

- Check to see if access restrictions, such as MAC address filtering, are set on the router or access point. If access restrictions are set, add your product's MAC address to your router's address list. To obtain your product's MAC address, print a network status sheet. Then follow the instructions in your router or access point documentation to add the address to the list.
- If your router or access point does not broadcast its network name (SSID), follow the instructions that came with your product to enter your wireless network name manually.
- If your router or access point has security enabled, determine the kind of security it is using and any required password or passphrase for connection. Then make sure to enter the exact WEP key or WPA passphrase correctly.
- Check if your computer is restricting the available wireless channels. If so, verify that your wireless access point is using one of the usable channels and change to a usable channel, if necessary.
- If you are using a Wi-Fi Direct connection that suddenly disconnects, the Wi-Fi direct password on your device may have been changed. If necessary, delete the existing **DIRECT-xxxxxxxx** connection settings from your device and enter a new password. See your device documentation for instructions.
- If you connected your product to a Windows computer using Wi-Fi Direct and it automatically selected Access Point Mode, you may have trouble accessing a low-priority Internet connection. Check the network connection or adapter settings in the Windows Control Panel and set the **Internet metric** setting to **100** for your version of the Internet Protocol.

Parent topic: Solving Network Problems

Related concepts

Wi-Fi Direct Mode Setup

Related tasks

Disabling Wi-Fi Features

Printing a Network Connection Report

Printing a Network Status Sheet

Related topics

Wi-Fi or Wired Networking

Network Software Cannot Find Product on a Network

If EpsonNet Setup cannot find your product on a network, try these solutions:

- Make sure your product is turned on and connected to your network. Verify connection using your product control panel.
- Check if your network name (SSID) contains non-ASCII characters. Your product cannot display non-ASCII characters.
- Print a network connection report and check the codes and messages on the report to help determine the cause of the problem.
- Make sure your product is not connected to a guest network.
- If necessary, reinstall your product software and try running EpsonNet Setup again:
  1. Reset your product's network settings to their factory defaults.
  2. **Windows only:** Uninstall your product software.
  3. Restart your router following the instructions in your router documentation.

     Note: If you are reading these instructions online, you will lose your Internet connection when you restart your router, so note the next step before restarting it.

  4. Download your product software from the Epson website using the instructions on the *Start Here* sheet.
- If you have replaced your router, reinstall your product software to connect to the new router.

  Note: If you are using a 5 GHz wireless router, set the router to operate in dual band (2.4 GHz and 5 GHz) mode. If your router uses a single network name (SSID) for both the 2.4 GHz and 5 GHz band, give each band its own network name (SSID) instead, such as Home Network 2.4 GHz and Home

Network 5 GHz. See your router documentation or contact your internet service provider for instructions.

- Check to see if your wireless router or access point has an enabled Privacy Separator function that is preventing detection of your device over the network. See your router or access point documentation for instructions on disabling the Privacy Separator function.

Parent topic: Solving Network Problems

Related concepts

Uninstall Your Product Software

Related tasks

Printing a Network Connection Report

Related topics

Wi-Fi or Wired Networking

Product Does Not Appear in Mac Printer Window

If your product does not appear in the Mac printer window, try these solutions:

- Turn your product off, wait 30 seconds, then turn it back on again.
- If you are connecting the product via Wi-Fi Protected Setup (WPS) and the Wi-Fi icon on your product's LCD screen is not lit, make sure you select one of the WPS options from the product control panel within 2 minutes of pressing the WPS button on your router.
- If you are connecting the product wirelessly via EpsonNet Setup and the Wi-Fi icon does not appear lit on your LCD screen, make sure your product software was installed correctly. If necessary, reinstall your software.

Note: If you are using a 5 GHz wireless router, set the router to operate in dual band (2.4 GHz and 5 GHz) mode. If your router uses a single network name (SSID) for both the 2.4 GHz and 5 GHz band, give each band its own network name (SSID) instead, such as Home Network 2.4 GHz and Home Network 5 GHz. See your router documentation or contact your internet service provider for instructions.

Parent topic: Solving Network Problems

Related concepts

Uninstall Your Product Software

Wireless Network Connection is Unstable on a Mac

If you connected a device to a USB 3.0 port on your Mac, you may experience wireless network interference between your product and your Mac.

If you cannot connect to your product over the wireless network or the connection becomes unstable, move the device connected to your Mac USB 3.0 port further away from your Mac.

Parent topic: Solving Network Problems

Cannot Print Over a Network

If you cannot print over a network, try these solutions:

- Make sure that your product is turned on.
- Make sure you install your product's network software as described in your product documentation.
- Print a network status sheet and verify that the network settings are correct. If the network status is **Disconnected**, check any cable connections and turn your product off and then on again.
- Print a network connection report and check the codes and messages on the report to help determine the cause of the problem.
- If you are using TCP/IP, make sure the product's IP address is set correctly for your network. If your network does not assign IP addresses using DHCP, set the IP address manually.
- Make sure your computer and product are both using the same wireless network.
- If network printing is slow, print a network status sheet and check the signal strength. If it is poor, place your product closer to your router or access point. Avoid placing your product near a microwave oven, 2.4 GHz cordless phone, or large metal object, such as a filing cabinet.

  Note: If you are using a 5 GHz wireless router, set the router to operate in dual band (2.4 GHz and 5 GHz) mode. If your router uses a single network name (SSID) for both the 2.4 GHz and 5 GHz band, give each band its own network name (SSID) instead, such as Home Network 2.4 GHz and Home Network 5 GHz. See your router documentation or contact your internet service provider for instructions.

- Try restarting your router following the instructions in your router documentation.

  Note: If you are reading these instructions online, you will lose your Internet connection when you restart your router.

- Check to see if your wireless router or access point has an enabled Privacy Separator function that is preventing printing from a device over the network. See your router or access point documentation for instructions on disabling the Privacy Separator function.
- If you are connecting the product wirelessly via EpsonNet Setup and the Wi-Fi connection icon is not lit or does not appear on the product's LCD screen, make sure your product software was installed correctly. If necessary, reinstall your software.

Parent topic: Solving Network Problems

Related references

Cannot Scan Over a Network

Related tasks

Printing a Network Status Sheet
Printing a Network Connection Report

Related topics

Wi-Fi or Wired Networking

Cannot Scan Over a Network

If you cannot start Epson Scan 2 for scanning over a network, try these solutions:

- If you cannot scan from your product control panel, make sure you restarted your computer after installing the product software. Make sure the Event Manager program is not being blocked by your firewall or security software.

  Note: If you are using a 5 GHz wireless router, set the router to operate in dual band (2.4 GHz and 5 GHz) mode. If your router uses a single network name (SSID) for both the 2.4 GHz and 5 GHz band, give each band its own network name (SSID) instead, such as Home Network 2.4 GHz and Home Network 5 GHz. See your router documentation or contact your internet service provider for instructions.

- If you are scanning a large original at a high resolution, a network communication error may occur. Try scanning again at a lower resolution.
- If network communication was interrupted while starting Epson Scan 2, exit Epson Scan 2, wait a few seconds, and restart it. If Epson Scan 2 cannot restart, turn off your product, turn it back on, and try restarting Epson Scan 2 again.
- Check the scanner setting and reset the connection if necessary using Epson Scan 2 Utility:

Windows 10: Click and select **EPSON** > **Epson Scan 2 Utility**. Make sure your product is selected. If necessary, select the **Other** tab and click **Reset**.

Windows 8.x: Navigate to the **Apps** screen, select **EPSON**, and select **Epson Scan 2 Utility**. Make sure your product is selected. If necessary, select the **Other** tab and click **Reset**.

Windows (other versions): Click or **Start** > **All Programs** or **Programs** > **EPSON** > **Epson Scan 2** > **Epson Scan 2 Utility**. Make sure your product is selected. If necessary, select the **Other** tab and click **Reset**.

Mac: Open the **Applications** folder, click **Epson Software**, and click **Epson Scan 2 Utility**. Make sure your product is selected. If necessary, select the **Other** tab and click **Reset**.

- You may need to disable the firewall and any anti-virus software on your wireless router or access point.

Parent topic: Solving Network Problems

Related tasks

Starting a Scan Using the Product Control Panel

Starting a Scan Using the Epson Scan 2 Icon

Solving Copying Problems

Check these solutions if you have problems copying with your product.

Product Makes Noise, But Nothing Copies

Product Makes Noise When It Sits for a While

Parent topic: Solving Problems

Product Makes Noise, But Nothing Copies

If your product makes a noise, but nothing copies, try these solutions:

- Run a nozzle check to see if any of the print head nozzles are clogged. Then clean the print head, if necessary.
- If the nozzle check page does not print, but the product's power is on, make sure your product software is installed correctly.
- Make sure your product is level (not tilted).

Parent topic: Solving Copying Problems

Related concepts

Print Head Nozzle Check

Print Head Cleaning

Product Makes Noise When It Sits for a While

Your product is performing routine maintenance. This is normal.

Parent topic: Solving Copying Problems

Solving Paper Problems

Check these sections if you have problems using paper with your product.

Paper Feeding Problems
Paper Jams Inside the Product
Paper Ejection Problems

Parent topic: Solving Problems

Paper Feeding Problems

If you have problems feeding paper, try these solutions:

- Make sure the paper cassette is inserted all the way in the printer.
- If paper does not feed correctly, remove and reload it in the cassette and adjust the edge guides. Make sure the paper stack is not above the tab on the edge guides inside the cassette.
- If multiple pages feed at once, remove the paper, fan the edges to separate the sheets, and reload it.
- Do not load more than the recommended number of sheets.
- Make sure your paper meets the specifications for your product.
- If paper jams when you print on both sides of the paper, try loading fewer sheets.
- For best results, follow these guidelines:
  - Use new, smooth, high-quality paper that is not curled, creased, old, too thin, or too thick.
  - Load paper in the cassette printable side down.
  - Follow any special loading instructions that came with the paper.

Parent topic: Solving Paper Problems

Related references

Paper Jams Inside the Product
Paper Specifications

Paper Jams Inside the Product

If you see a message that paper has jammed in the product, follow the on-screen instructions to locate and remove the jammed paper.

Take the following precautions when removing jammed paper from the product:

- Remove the jammed paper carefully. Using too much force may damage the product.
- Unless specifically instructed, avoid tilting the product, placing it on its side, or turning it upside down, as ink may spill.

Warning: Never touch the buttons on the control panel while your hand is inside the product. If the product starts operating, it may cause an injury. Do not touch any protruding parts inside the product.

Parent topic: Solving Paper Problems

Paper Ejection Problems

If you have problems with paper ejecting properly, try these solutions:

- If paper does not eject fully, you may have set the wrong paper size. Cancel printing to eject the paper. Select the correct paper size when you reprint.
- If paper is wrinkled when it ejects, it may be damp or too thin. Load new paper and be sure to select the correct paper type setting when you reprint.

Parent topic: Solving Paper Problems

Related references

Paper Jams Inside the Product

Paper or Media Type Settings - Printing Software

Paper Type Settings - Control Panel

Related topics

Loading Paper

Solving Problems Printing from a Computer

Check these sections if you have problems while printing from your computer.

Note: When printing using AirPrint, the available print settings are different from those covered in this manual. See the Apple website for details.

Nothing Prints
Product Icon Does Not Appear in Windows Taskbar
Printing is Slow

Parent topic: Solving Problems

Nothing Prints

If you have sent a print job and nothing prints, try these solutions:

- Make sure your product is turned on and connected to your computer.
- Make sure any interface cables are connected securely at both ends.
- If you connected your product to a USB hub, make sure it is a first-tier hub. If it still does not print, connect your product directly to your computer instead of the hub.
- Make sure the printer status is not offline or pending.
- Run a product check to see if a test page prints. If the test page prints, check to see if your product software is installed correctly.
- In Windows, make sure your product is selected as the default printer.
- In Windows, delete all jobs from the Windows Spooler. Click **Print Queue** on the Maintenance tab in the printer settings window, and cancel any stalled print jobs.
- On a Mac, make sure the printer is not paused.

Parent topic: Solving Problems Printing from a Computer

Related tasks

Running a Product Check

Product Icon Does Not Appear in Windows Taskbar

If you do not see your product icon in the Windows taskbar, first try restarting your computer. If that does not work, try this solution:

1. Do one of the following:
   - **Windows 10:** Click and select (Settings) > **Devices** > **Printers & scanners**. Select your product name and select **Manage** > **Printing preferences**.
   - **Windows 8.x**: Navigate to the **Apps** screen and select **Control Panel** > **Hardware and Sound** > **Devices and Printers**. Right-click your product name, select **Printing Preferences**, and select your product name again if necessary.

- **Windows 7**: Click and select **Devices and Printers**. Right-click your product name, select **Printing Preferences**, and select your product name again if necessary.
- **Windows Vista**: Click , select **Control Panel**, and click **Printer** under **Hardware and Sound**. Right-click your product name, select **Printing Preferences**, and select your product name again if necessary.

2. Click the **Maintenance** tab.
3. Click the **Extended Settings** button.
4. Select **Enable EPSON Status Monitor 3** and click **OK**.
5. Click the **Monitoring Preferences** button.
6. Click the checkbox for the option that adds the shortcut icon to the taskbar.
7. Click **OK** to close the open program windows.

Parent topic: Solving Problems Printing from a Computer

Printing is Slow

If printing becomes slow, try these solutions:

- Make sure your system meets the requirements for your operating system. If you are printing a high-resolution image, you may need more than the minimum requirements. If necessary, increase your system's memory.
- If you are using Windows 7, close the **Devices and Printers** window before you print.
- On a Mac, make sure you download and install the Epson printer driver.
- Make sure **Quiet Mode** is turned off.
- Clear space on your hard drive or run a defragmentation utility to free up existing space.
- Close any programs you are not using when you print.
- If your product is connected to a USB hub, connect it directly to your computer instead.
- If printing becomes slower after printing continuously for a long time, the product may have automatically slowed down to protect the print mechanism from overheating or becoming damaged. Let the product rest with the power on for 30 minutes, then try printing again.

For the fastest printing, select the following settings in your product software:

- Turn on any high speed settings in your product software.
- Select a lower print quality setting.

- **Windows**: Click the **Maintenance** or **Utility** tab, select **Extended Settings** or **Speed and Progress**, and select the following settings:
  - **Always Spool RAW Datatype**
  - **Page Rendering Mode**
  - **Print as Bitmap**
- **Windows**: Select **Printer Properties**, click the **More Options** tab, and make sure the **High Speed** setting is enabled.
- **Mac**: Select **System Preferences**, select **Printers & Scanners**, and select your product. Select **Options & Supplies**, select **Options** (or **Driver**), and enable the **High Speed Printing** setting.

If printing is still slow and you are using Windows 7 or Windows Vista, try the following:

1. Click and select **Computer** or **My Computer**. Double-click the **C:** drive and open these folders: **ProgramData > EPSON > PRINTER**.

   Note: If you do not see the ProgramData folder, open the **Organize** menu and select **Folder and search options**. In the window that appears, click the **View** tab, select **Show hidden files, folders, and drives** in the Advanced settings list, and click **OK**.

2. Right-click the **EPAUDF01.AUD** file and select **Delete**.
3. Restart your computer and try printing again.

Parent topic: Solving Problems Printing from a Computer

Related references

Paper or Media Type Settings - Printing Software
Windows System Requirements
Mac System Requirements

Related tasks

Selecting Basic Print Settings - Windows
Selecting Extended Settings - Windows
Selecting Basic Print Settings - Mac
Selecting Printing Preferences - Mac

Solving Page Layout and Content Problems

Check these sections if you have problems with the layout or content of your printed pages.

Note: When printing using AirPrint, the available print settings are different from those covered in this manual. See the Apple website for details.

Inverted Image
Too Many Copies Print
Blank Pages Print
Incorrect Margins on Printout
Border Appears on Borderless Prints
Incorrect Characters Print
Incorrect Image Size or Position
Slanted Printout

Parent topic: Solving Problems

Inverted Image

If your printed image is inverted unexpectedly, try these solutions:

- Turn off any mirror or inversion settings in your printing application.
- Turn off the **Mirror Image**, **Flip horizontally**, or **Reverse page orientation** settings in your printer software. (This option has different names, depending on your operating system version.)

Parent topic: Solving Page Layout and Content Problems

Related tasks
Selecting Basic Print Settings - Mac
Selecting Additional Layout and Print Options - Windows

Too Many Copies Print

Make sure that the **Copies** setting in your printing program or printer software is not set for multiple copies.

Parent topic: Solving Page Layout and Content Problems

Blank Pages Print

If blank pages print unexpectedly, try these solutions:

- Make sure you selected the correct paper size settings in your printing program and printer software.
- If a blank page exists in a document you are printing and you want to skip printing it, select the **Skip Blank Page** setting in your printer software, if available.

- Run a print head nozzle check to see if any of the nozzles are clogged. Then clean the print head, if necessary.
- Make sure your product is selected as the printer in your printing program.
- You may need to refill the ink. Visually check the ink levels.

Parent topic: Solving Page Layout and Content Problems

Related concepts

Print Head Nozzle Check

Print Head Cleaning

Related references

Paper or Media Type Settings - Printing Software

Paper Type Settings - Control Panel

Related topics

Loading Paper

Incorrect Margins on Printout

If your printed page has incorrect margins, try these solutions:

- Make sure you selected the correct paper size settings in your printing program and printer software.
- Make sure you selected the correct margins for your paper size in your printing program.
- Make sure your paper is positioned correctly for feeding into the product.

You can use the preview option in your printer software to check your margins before you print.

Parent topic: Solving Page Layout and Content Problems

Related tasks

Selecting Basic Print Settings - Windows

Selecting Basic Print Settings - Mac

Selecting Page Setup Settings - Mac

Related topics

Loading Paper

Border Appears on Borderless Prints

If you see a border on borderless prints, try these solutions:

- Make sure you are printing on a compatible borderless paper type and size.

Note: For custom paper sizes, make sure you select a supported borderless page width.

- **Windows**: Make sure you selected the **Borderless** setting in your printer software.
- **Mac**: Make sure you selected the **Borderless** checkbox or a paper size with a **Borderless** option in your printer software.
- Adjust the **Expansion** setting to adjust the amount of image expansion on the edges of borderless prints.
- Make sure the image size and the paper size are set correctly; if the image is small, the enlargement may not be enough to cover the paper.
- Access the Extended Settings (Windows) or Printing Preferences (Mac) and select **Remove White Borders**.

Parent topic: Solving Page Layout and Content Problems

Related tasks

Selecting Basic Print Settings - Windows
Selecting Basic Print Settings - Mac

Incorrect Characters Print

If incorrect characters appear in your prints, try these solutions before reprinting:

- Make sure any cables are securely connected at both ends.
- In Windows, delete all jobs from the Windows Spooler. Click **Print Queue** on the Maintenance tab in the printer settings window, and cancel any stalled print jobs.
- If your product is connected to a USB hub, connect it directly to your computer instead.
- If your computer entered sleep mode the last time you printed, the next print job after your computer exits sleep mode may contain garbled characters. Print your document again.
- If incorrect characters still appear in your prints, try connecting your product using a different cable.

Parent topic: Solving Page Layout and Content Problems

Related tasks

Selecting Basic Print Settings - Windows
Selecting Basic Print Settings - Mac
Selecting Page Setup Settings - Mac

Incorrect Image Size or Position

If your printed image is the wrong size or in the wrong position, try these solutions:

- Make sure you selected the correct paper size and layout settings in your printing program and printer software.
- Make sure you selected the correct paper size on the control panel.
- Make sure your paper is positioned correctly for feeding into the printer.
- Clean the scanner glass and document cover.
- If the edges of a copy are cropped, slightly move the original away from the edges of the scanner glass.
- Make sure you selected the correct margins for your paper size in your printing program.
- Be sure to select the correct **Original Size** setting for your original in the Copy settings.

You can use the preview option in your printer software to check your margins before you print.

Parent topic: Solving Page Layout and Content Problems

Related tasks

Selecting Basic Print Settings - Windows
Selecting Basic Print Settings - Mac
Selecting Page Setup Settings - Mac
Cleaning Your Product

Related topics

Loading Paper

Slanted Printout

If your printouts are slanted, try these solutions:

- Slide the edge guide against the edge of the paper.
- Select a higher print quality setting in your printer software.
- Turn off any high speed settings in your product software.
- Align the print head.
- Make sure the product is not printing while tilted or at an angle.

Parent topic: Solving Page Layout and Content Problems

Related tasks

Selecting Basic Print Settings - Windows

Selecting Basic Print Settings - Mac

Related topics

Loading Paper

Solving Print Quality Problems

Check these sections if your printouts have problems with print quality, but your image looks fine on your computer screen.

Note: When printing using AirPrint, the available print settings are different from those covered in this manual. See the Apple website for details.

White or Dark Lines in Printout

Blurry or Smeared Printout

Faint Printout or Printout Has Gaps

Grainy Printout

Incorrect Colors

Parent topic: Solving Problems

Related topics

Solving Scanned Image Quality Problems

White or Dark Lines in Printout

If you notice white or dark lines in your prints (also called banding), try these solutions before you reprint:

- Run a nozzle check to see if any of the print head nozzles are clogged. Then clean the print head, if necessary.
- Make sure the paper type setting matches the type of paper you loaded.
- Make sure you loaded the printable side of the paper correctly for your product.
- Turn off any high speed settings in your product software.
- Align the print head.
- Adjust the print quality in the product software.
- You may need to refill the ink. Visually check the ink levels.

- If you have not used the product for a long time, run the Power Cleaning utility.

  Note: Power Cleaning consumes a lot of ink, so run this utility only if you cannot improve print quality by cleaning the print head.

Parent topic: Solving Print Quality Problems

Related concepts

Print Head Cleaning
Print Head Alignment
Power Cleaning
Print Head Nozzle Check

Related references

Paper or Media Type Settings - Printing Software

Related tasks

Selecting Additional Layout and Print Options - Windows
Selecting Printing Preferences - Mac
Refilling the Ink Tanks

Related topics

Loading Paper

Blurry or Smeared Printout

If your printouts are blurry or smeared, try these solutions:

- Make sure your paper is not damp, curled, old, or loaded incorrectly in your product.
- Use a support sheet with special paper, or load special paper one sheet at a time.
- Make sure your paper meets the specifications for your product.
- Use Epson papers to ensure proper saturation and absorption of genuine Epson inks.
- Make sure the paper type setting in your product software matches the type of paper you loaded.
- If you are printing on letterhead paper, make sure the paper size setting matches the size of paper you loaded. If you select a paper size that is too large for the paper you loaded, the product may print beyond the edges of the paper and cause ink to smear.
- Make sure you loaded the printable side of the paper correctly for your product.
- Remove each sheet from the output tray as it is printed.

- Avoid handling printouts on glossy paper right after printing to allow the ink to set.
- Turn off any high speed settings in your product software.
- If you print on both sides of a sheet of paper, smudges may appear on the reverse side of heavily saturated or dark images. If one side of a sheet will contain a lighter image or text, print that side first. Adjust the density and/or ink drying time settings.
- If printed copies are smeared, lower the copy density setting on the product control panel.
- The ink levels may be low and you may need to refill the ink. Visually check the ink levels.
- Run a nozzle check to see if any of the print head nozzles are clogged. Then clean the print head, if necessary.
- Align the print head.
- Adjust the print quality in the product software.
- Clean the paper path.
- If you printed when the ink levels were too low to be seen in the ink tank windows, refill the ink tanks to the upper lines and run the Power Cleaning utility. Then run a nozzle check to see if print quality has improved.
- If you have not used the product for a long time, run the Power Cleaning utility.

  Note: Power Cleaning consumes a lot of ink, so run this utility only if you cannot improve print quality by cleaning the print head.

Note: Your product will not operate properly while tilted at an angle. Place it on a flat, stable surface that extends beyond the base of the product in all directions.

Parent topic: Solving Print Quality Problems

Related concepts

Print Head Nozzle Check

Print Head Cleaning

Print Head Alignment

Related references

Paper Specifications

Compatible Epson Papers

Related tasks

Aligning the Print Head Using the Product Control Panel

Selecting Additional Layout and Print Options - Windows
Selecting Printing Preferences - Mac
Cleaning the Paper Guide
Selecting Basic Print Settings - Windows
Selecting Basic Print Settings - Mac
Selecting Extended Settings - Windows

Faint Printout or Printout Has Gaps

If your printouts are faint or have gaps, try these solutions:

- Run a nozzle check to see if any of the print head nozzles are clogged. Then clean the print head, if necessary.
- The ink levels may be low. Visually check the ink levels.
- Make sure the paper type setting matches the type of paper you loaded.
- Make sure your paper is not damp, curled, old, or loaded incorrectly in your product.
- Align the print head.
- Adjust the print quality in the product software.
- Clean the paper path.
- If you have not used the product for a long time, run the Power Cleaning utility.

  Note: Power Cleaning consumes a lot of ink, so run this utility only if you cannot improve print quality by cleaning the print head.

Parent topic: Solving Print Quality Problems

Related concepts

Print Head Nozzle Check
Print Head Alignment
Print Head Cleaning

Related references

Paper or Media Type Settings - Printing Software
Paper Type Settings - Control Panel

Related tasks

Cleaning the Paper Guide

Refilling the Ink Tanks

Related topics

Loading Paper

Grainy Printout

If your printouts are grainy, try these solutions:

- Make sure you loaded the printable side of the paper correctly for your product.
- Select a higher print quality setting and turn off any high speed settings in your product software.
- Run a nozzle check to see if any of the print head nozzles are clogged. Then clean the print head, if necessary.
- Align the print head.
- Adjust the print quality.
- You may need to increase the image resolution or print a smaller size; see your software documentation.

  Note: Images from the Internet may be low resolution and not result in a high quality printout.

- If you enlarged the image size in an image-editing program, you need to increase the image resolution setting to retain a high image quality. Increase the image resolution by the same amount you increase the image size. For example, if the image resolution is 300 dpi (dots per inch) and you will double the image size for printing, change the resolution setting to 600 dpi.

  Note: Higher resolution settings result in larger file sizes, which take longer to process and print. Consider the limitations of your computer system when selecting a resolution, and select the lowest possible resolution that produces acceptable quality to keep file sizes manageable.

Parent topic: Solving Print Quality Problems

Related concepts

Print Head Nozzle Check

Print Head Alignment

Print Head Cleaning

Related tasks

Selecting Basic Print Settings - Windows

Selecting Basic Print Settings - Mac

Selecting Printing Preferences - Mac
Selecting Additional Layout and Print Options - Windows

Incorrect Colors

If your printouts have incorrect colors, try these solutions:

- Make sure the paper type setting matches the paper you loaded.
- Make sure the **Grayscale** setting is not selected in your printer software.
- If you selected **Standard-Vivid** (Windows) or **Normal-Vivid** (Mac) as the quality setting in the printer software, try selecting **Standard** (Windows) or **Normal** (Mac) instead.
- Run a nozzle check to see if any of the print head nozzles are clogged. Then clean the print head, if necessary.
- The ink levels may be low and you may need to refill the ink. Visually check the ink levels.
- If you printed when the ink levels were too low to be seen in the ink tank windows, refill the ink tanks to the upper lines and run the Power Cleaning utility. Then run a nozzle check to see if print quality has improved.
- After you print, the colors in your printout need time to set as the ink dries. During this time, the colors may look different than you expect. To speed up drying time, do not stack your printouts on top of each other.
- Your printed colors can never exactly match your on-screen colors. However, you can use a color management system to get as close as possible. Try using the color management options in your printer software.
- For best results, use genuine Epson paper.
- If you have not used the product for a long time, run the Power Cleaning utility.

  Note: Power Cleaning consumes a lot of ink, so run this utility only if you cannot improve print quality by cleaning the print head.

Parent topic: Solving Print Quality Problems

Related concepts

Print Head Nozzle Check
Print Head Cleaning
Power Cleaning

Related references

Compatible Epson Papers

Related tasks

Selecting Additional Layout and Print Options - Windows
Selecting Basic Print Settings - Windows
Selecting Basic Print Settings - Mac
Refilling the Ink Tanks
Managing Color - Mac

Solving Scanning Problems

Check these solutions if you have problems scanning with your product.

Scanning Software Does Not Operate Correctly
Cannot Start Epson Scan 2

Parent topic: Solving Problems

Scanning Software Does Not Operate Correctly

If your scanning software does not operate correctly, try these solutions:

- Make sure your computer has adequate memory and meets the system requirements for your operating system.
- Make sure your computer is not running in a power-saving mode, such as sleep or standby. If so, wake your system and restart your scanning software.
- If you upgraded your operating system but did not reinstall your scanning software, try reinstalling it.
- In Windows, make sure your product is listed as a valid device in the **Scanners and Cameras** control panel.

Parent topic: Solving Scanning Problems

Related concepts

Uninstall Your Product Software

Related references

Windows System Requirements
Mac System Requirements

Cannot Start Epson Scan 2

If you cannot start Epson Scan 2, try these solutions:

- Make sure your product is turned on and any interface cables are securely connected at both ends.
- Make sure Epson Scan 2 is selected as your scanning program.
- Make sure your computer is not running in a power-saving mode, such as sleep or standby. If so, wake your system and restart Epson Scan 2.
- Check the connection setting and test the connection using Epson Scan 2 Utility:

  Windows 10: Click and select **EPSON** > **Epson Scan 2 Utility**. Make sure the correct product is selected. If necessary, select the **Other** tab and click **Reset**.

  Windows 8.x: Navigate to the **Apps** screen and select **Epson Scan 2 Utility**. Make sure the correct product is selected. If necessary, select the **Other** tab and click **Reset**.

  Windows (other versions): Click or **Start** > **All Programs** or **Programs** > **EPSON** > **Epson Scan 2** > **Epson Scan 2 Utility**. Make sure the correct product is selected. If necessary, select the **Other** tab and click **Reset**.

  Mac: Open the **Applications** folder, click **Epson Software**, and click **Epson Scan 2 Utility**. Make sure the correct product is selected. If necessary, select the **Other** tab and click **Reset**.
- Make sure you do not have multiple versions of Epson Scan 2 installed. If you do, uninstall both versions and install one version.
- If you upgraded your operating system but did not reinstall Epson Scan 2, try reinstalling it.

Parent topic: Solving Scanning Problems

Related topics
Starting a Scan

Solving Scanned Image Quality Problems

Check these sections if a scanned image on your computer screen has a quality problem.

Image Consists of a Few Dots Only
Line of Dots Appears in All Scanned Images
Straight Lines in an Image Appear Crooked
Image is Distorted or Blurry
Image Colors are Patchy at the Edges
Image is Too Dark

Back of Original Image Appears in Scanned Image
Ripple Patterns Appear in an Image
Scanned Image Colors Do Not Match Original Colors
Scanned Image Edges are Cropped

Parent topic: Solving Problems

Image Consists of a Few Dots Only

If your scanned image consists only of a few dots, try these solutions:

- Make sure you placed your original for scanning facing the correct way.
- If the **Image Type** setting is **Black & White**, adjust the **Threshold** and scan again.

Parent topic: Solving Scanned Image Quality Problems

Line of Dots Appears in All Scanned Images

If a line of dots appears in all your scanned images, clean the scanner glass with a soft, dry, lint-free cloth or use a small amount of glass cleaner on the cloth, if necessary. Paper towels are not recommended.

Caution: Do not spray glass cleaner directly on the scanner glass.

If you are scanning from the ADF, try cleaning the ADF and scan again.

Parent topic: Solving Scanned Image Quality Problems

Straight Lines in an Image Appear Crooked

If straight lines in an original appear crooked in a scanned image, make sure to place your original straight when you scan it.

If you are scanning from the ADF, try cleaning the ADF and scan again.

Parent topic: Solving Scanned Image Quality Problems

Related tasks

Placing Originals on the Scanner Glass

Image is Distorted or Blurry

If a scanned image appears distorted or blurry, try these solutions:

- Do not move your original or your product during scanning.

- Your product will not operate properly while tilted at an angle. Place your product on a flat, stable surface that extends beyond its base in all directions.
- Adjust these Epson Scan 2 settings (if available) and try scanning again:
  - Increase the **Resolution** setting.
  - If the **Image Type** setting is **Black & White**, adjust the **Threshold** setting.
  - If the **Image Type** setting is **Color** or **Grayscale**, select the **Unsharp Mask** setting.
  - If the **Image Type** setting is **Black & White**, select **Text Enhancement**. If the **Image Type** setting is **Color** or **Grayscale**, change the **Text Enhancement** setting to **High**.

Parent topic: Solving Scanned Image Quality Problems

Related references

Additional Scanning Settings - Main Settings Tab
Additional Scanning Settings - Advanced Settings Tab

Image Colors are Patchy at the Edges

If you are scanning a thick or warped original, cover its edges with paper to block external light as you scan it.

Parent topic: Solving Scanned Image Quality Problems

Image is Too Dark

If your scanned image is too dark, try these solutions:

- If the **Image Type** is set to **Color** or **Grayscale**, adjust the **Brightness** setting.
- Check the brightness and contrast settings of your computer monitor.

Parent topic: Solving Scanned Image Quality Problems

Related references

Additional Scanning Settings - Main Settings Tab
Additional Scanning Settings - Advanced Settings Tab

Back of Original Image Appears in Scanned Image

If an image from the back of a thin original appears in your scanned image, try these solutions:

- Place a piece of black paper on the back of the original and scan it again.

- Adjust these Epson Scan 2 settings (if available) and try scanning again:
  - Select the **Advanced Settings** tab and adjust the **Brightness** setting.
  - If the **Image Type** is set to **Black & White**, select **Text Enhancement**. If the **Image Type** is set to **Color** or **Grayscale**, change the **Text Enhancement** setting to **High**.

Parent topic: Solving Scanned Image Quality Problems

Ripple Patterns Appear in an Image

You may see a ripple pattern (called a moiré) in scanned images of printed documents. This is caused by interference from differing pitches in the scanner's screen and your original's halftone screen. To reduce this effect, adjust these Epson Scan 2 settings (if available) and try scanning again:

- Select the **Descreening** setting.
- Select a lower **Resolution** setting.

Parent topic: Solving Scanned Image Quality Problems

Related references

Additional Scanning Settings - Main Settings Tab
Additional Scanning Settings - Advanced Settings Tab

Scanned Image Colors Do Not Match Original Colors

Printed colors can never exactly match the colors on your computer monitor because printers and monitors use different color systems: monitors use RGB (red, green, and blue) and printers typically use CMYK (cyan, magenta, yellow, and black).

Check the color matching and color management capabilities of your computer, display adapter, and the software you are using to see if they are affecting the palette of colors you see on your screen.

To adjust the colors in your scanned image, adjust these Epson Scan 2 settings (if available) and try scanning again:

- If the **Image Type** setting is **Color** or **Grayscale**, adjust the **Contrast** setting.
- If the **Image Type** setting is **Black & White** or **Grayscale**, adjust the **Color Enhance** setting.

Parent topic: Solving Scanned Image Quality Problems

Related references

Additional Scanning Settings - Main Settings Tab
Additional Scanning Settings - Advanced Settings Tab

Scanned Image Edges are Cropped

If the edges of a scanned image are cropped, make sure your original is placed correctly for scanning. If necessary, move your original away from the edges of the scanner glass slightly.

Parent topic: Solving Scanned Image Quality Problems

Related tasks

Placing Originals on the Scanner Glass

Solving Faxing Problems

Check these solutions if you have problems faxing with your product.

Cannot Send or Receive Faxes
Cannot Receive Faxes with a Telephone Connected to Your Product
Fax Memory Full Error Appears
Sent Fax Quality is Poor
Sent Fax is Received in an Incorrect Size
Received Fax Quality is Poor
Received Fax is Not Printed

Parent topic: Solving Problems

Cannot Send or Receive Faxes

If you cannot send or receive faxes, try these solutions:

- If you are faxing from a computer, use the Epson FAX Utility to send your fax.
- Make sure the recipient's fax machine is turned on and working.
- Make sure paper is loaded correctly in your product.
- Make sure you have set up your header information and have not blocked your caller ID. Otherwise, your faxes might be rejected by the recipient's fax machine.
- If you did not connect a telephone to your product, set the Receive Mode setting to **Auto** so you can receive faxes automatically.
- Check that the cable connecting your telephone wall jack to your product's **LINE** port is secure.
- Print a fax connection report using your product control panel or fax software to help diagnose the problem.
- Verify that the telephone wall jack works by connecting a phone to it and testing it.

- Check the **Line Type** setting and set it to **PBX**. If your phone system requires an external access code to reach an outside line, register the code to the product and add a # (hash) to the beginning of the phone number when dialing.
- If you connected your product to a DSL phone line, you must connect a DSL filter to the phone jack to enable faxing over the line. Contact your DSL provider for the necessary filter.
- Try lowering your product's fax speed setting.
- If your telephone line uses call waiting and you have trouble receiving faxes, turn off call waiting to prevent disruption of incoming faxes.
- If you have subscribed to a call forwarding service, the product may not be able to receive faxes. Contact your service provider for assistance.
- Check your inbox and delete faxes after reading or printing them. If the inbox is full, the product cannot receive faxes.
- If you cannot send faxes at a specified time, make sure the date and time are set correctly on the product.

Note: If your product is connected to a VoIP (Voice over Internet Protocol) phone line, keep in mind that fax machines are designed to work over analog phone lines. Epson cannot guarantee that fax transmission will work when using VoIP.

If your phone line includes voice mail answering services, calls or faxes may be inadvertently received by your voice mail service.

Parent topic: Solving Faxing Problems

Related tasks

Setting Up the Fax Utility - Windows

Setting Up Fax Features Using the Fax Utility - Mac

Printing Fax Reports

Checking Fax Status

Viewing a Fax on the LCD Screen (Using the Inbox)

Selecting the Date and Time

Related topics

Setting Up Fax Features

Cannot Receive Faxes with a Telephone Connected to Your Product

If you cannot receive faxes when a telephone is connected to your product, try these solutions:

- Make sure your telephone is connected to your product's **EXT** port.
- Make sure the Receive Mode is set to **Manual**.

Note: When answering a call that is a fax, wait until the product's LCD screen displays a message that a connection has been made before you hang up.

Parent topic: Solving Faxing Problems

Related tasks

Connecting a Telephone or Answering Machine
Using the Fax Setup Wizard

Fax Memory Full Error Appears

If you see an error message telling you that the product's fax memory is full, try these solutions:

- If you set the product to save received faxes in the product's memory or inbox, delete any faxes you have already read.

  Note: Your product can store up to 100 faxes before its inbox is full.

- If you set the product to save received faxes on a computer, turn on the selected computer. Once the faxes are saved on the computer, they are deleted from the product's memory.
- If the memory is full, try sending a monochrome fax using the **Direct Send** feature or sending your faxes in smaller batches.
- If the product cannot print a received fax due to a product error, such as a paper jam, the memory full error may appear. Clear any product errors, then ask the sender to resend the fax.

Parent topic: Solving Faxing Problems

Related tasks

Viewing a Fax on the LCD Screen (Using the Inbox)
Setting Up the Fax Utility - Windows

Sent Fax Quality is Poor

If the sent fax quality is poor, try these solutions:

- Clean the scanner glass.
- Clean the ADF.
- Try changing the resolution or density setting on the control panel.
- Try changing the original type setting on the control panel.
- If you are sending a monochrome fax to a single recipient, try sending the fax using the **Direct Send** feature.

  Note: If you send a high-resolution monochrome fax without using the **Direct Send** feature, the product may automatically lower the resolution.

- Try enabling the error correction mode (ECM) setting.

Parent topic: Solving Faxing Problems

Related references

Fax Sending Options

Basic Settings - Fax

Related tasks

Cleaning Your Product

Sent Fax is Received in an Incorrect Size

If your recipient receives a fax in an incorrect size, try these solutions:

- If you are sending a fax using the scanner glass, make sure your original is placed correctly and that the correct paper size is selected on the control panel.
- Clean the scanner glass and document cover.

Parent topic: Solving Faxing Problems

Related tasks

Cleaning Your Product

Related topics

Placing Originals on the Product

Received Fax Quality is Poor

If you receive a poor quality fax, try these solutions:

- Try enabling the error correction mode (ECM) setting.
- Contact the fax sender and ask them to send the fax in a higher resolution.
- Try reprinting the received fax.

Parent topic: Solving Faxing Problems

Related references

Basic Settings - Fax

Received Fax is Not Printed

If a received fax is not printed, try these solutions:

- Make sure the product is free of errors. The product cannot print received faxes if an error has occurred with the product, such as a paper jam.
- If the product has been set to save received faxes in the product's memory or inbox, received faxes are not automatically printed. Check the **Receive Settings** options on the product control panel and change them, if necessary.

Parent topic: Solving Faxing Problems

Related tasks

Viewing a Fax on the LCD Screen (Using the Inbox)

Selecting Received Fax Options Using the Fax Utility - Windows

Uninstall Your Product Software

If you have a problem that requires you to uninstall and re-install your software, follow the instructions for your operating system.

Uninstalling Product Software - Windows

Uninstalling Product Software - Mac

Parent topic: Solving Problems

Uninstalling Product Software - Windows

You can uninstall and then re-install your product software to solve certain problems.

1. Turn off the product.

2. Disconnect any interface cables.
3. Do one of the following:
   - **Windows 10**: Click and select (Settings) > **Apps** > **Apps & features**. Then select the program you want to uninstall and select **Uninstall**.
   - **Windows 8.x**: Navigate to the **Apps** screen and select **Control Panel** > **Programs** > **Programs and Features**. Select the uninstall option for your Epson product, then select **Uninstall/Change**.

     Note: If you see a **User Account Control** window, click **Yes** or **Continue**.

     Select your product again, if necessary, then select **OK**, and click **Yes** to confirm the uninstallation.
   - **Windows (other versions)**: Click or **Start**, and select **All Programs** or **Programs**. Select **EPSON**, select your product, then click **EPSON Printer Software Uninstall**.

     Note: If you see a **User Account Control** window, click **Yes** or **Continue**.

     In the next window, select your product and click **OK**. Then follow any on-screen instructions.
4. Do one of the following to uninstall Epson Event Manager, then follow any on-screen instructions:
   - **Windows 10/8.x**: Select **Epson Event Manager** and click **Uninstall**.
   - **Windows 7/Windows Vista**: Open the Windows **Control Panel** utility. Select **Programs and Features**. (In Classic view, select **Programs** and click **Uninstall a program**.) Select **Epson Event Manager** and click **Uninstall/Change**.
5. Do one of the following to uninstall Epson Scan 2, then follow any on-screen instructions:
   - **Windows 10**: Select **Epson Scan 2** and click **Uninstall**.
   - **Windows 8.x/Windows 7/Windows Vista:** Select **Epson Scan 2** and click **Uninstall/Change**.
6. Restart your computer, then see the *Start Here* sheet to re-install your software.

Note: If you find that re-installing your product software does not solve a problem, contact Epson.

Parent topic: Uninstall Your Product Software

Uninstalling Product Software - Mac

In most cases, you do not need to uninstall your product software before re-installing it. However, you can download the Uninstaller utility from the Epson support website to uninstall your product software as described here.

Note: If you find that re-installing your product software does not solve a problem, contact Epson.

1. To download the Uninstaller utility, visit epson.com/support (U.S.), epson.ca/support (Canada), or epson.com.jm/support (Caribbean) and select your product.
2. Click **Downloads**.
3. Select your operating system, click **Utilities**, locate the Uninstaller utility, and click **Download**.
4. Run the file you downloaded.
5. Double-click the **Uninstaller** icon.
6. In the Epson Uninstaller screen, select the checkbox for each software program you want to uninstall.
7. Click **Uninstall**.
8. Follow the on-screen instructions to uninstall the software.
9. Reinstall your product software.

Note: If you uninstall the printer driver and your product name remains in the **Print & Fax**, **Print & Scan**, or **Printers & Scanners** window, select your product name and click the **–** (remove) icon to remove it.

Parent topic: Uninstall Your Product Software

Where to Get Help

If you need to contact Epson for technical support services, use the following support options.

Internet Support

Visit Epson's support website at epson.com/support (U.S.), epson.ca/support (Canada), or epson.com.jm/support (Caribbean) and select your product for solutions to common problems. You can download drivers and documentation, get FAQs and troubleshooting advice, or e-mail Epson with your questions.

Speak to a Support Representative

Before you call Epson for support, please have the following information ready:

- Product name
- Product serial number (located on a label on the product)
- Proof of purchase (such as a store receipt) and date of purchase
- Computer configuration
- Description of the problem

Then call:

- U.S.: (562) 276-4382, 6 AM to 8 PM, Pacific Time, Monday through Friday, and 7 AM to 4 PM, Pacific Time, Saturday
- Canada: (905) 709-3839, 6 AM to 8 PM, Pacific Time, Monday through Friday, and 7 AM to 4 PM, Pacific Time, Saturday

Days and hours of support are subject to change without notice. Toll or long distance charges may apply.

Purchase Supplies and Accessories

You can purchase genuine Epson ink and paper at epson.com (U.S. sales), epson.ca (Canadian sales), or epson.com.jm (Caribbean sales). You can also purchase supplies from an Epson authorized reseller. To find the nearest one, call 800-GO-EPSON (800-463-7766) in the U.S. or 800-807-7766 in Canada.

Parent topic: Solving Problems

Technical Specifications

These sections list the technical specifications for your product.

Note: Epson offers a recycling program for end of life Epson products. Please go to this site (U.S) or this site (Canada) for information on how to return your Epson products for proper disposal.

Windows System Requirements
Mac System Requirements
Paper Specifications
Printable Area Specifications
Scanning Specifications
Automatic Document Feeder (ADF) Specifications
Fax Specifications
Ink Specifications
Dimension Specifications
Electrical Specifications
Environmental Specifications
Interface Specifications
Network Interface Specifications
Safety and Approvals Specifications

Windows System Requirements

To use your product and its software, your computer should use one of these Microsoft operating systems:

- Windows 10
- Windows 8.x
- Windows 7
- Windows Vista
- Windows Server 2016
- Windows Server 2008 R2
- Windows Server 2008

- Windows Server 2003 R2
- Windows Server 2003 SP2 or later

Note: For the latest product software available for your operating system, visit the Epson support site at epson.com/support (U.S.), epson.ca/support (Canada), or epson.com.jm/support (Caribbean), select your product, and select **Downloads**.

Parent topic: Technical Specifications

Mac System Requirements

To use your product and its software, your Mac should use one of these operating systems:

- macOS 10.13.x
- macOS 10.12.x
- OS X 10.11.x
- OS X 10.10.x
- OS X 10.9.x
- OS X 10.8.x
- OS X 10.7.x
- OS X 10.6.8

Note: For the latest product software available for your operating system, visit the Epson support site at epson.com/support (U.S.), epson.ca/support (Canada), or epson.com.jm/support (Caribbean), select your product, and select **Downloads**.

Parent topic: Technical Specifications

Paper Specifications

Note: Since the quality of any particular brand or type of paper may be changed by the manufacturer at any time, Epson cannot guarantee the quality of any non-Epson brand or type of paper. Always test a sample of paper stock before purchasing large quantities or printing large jobs.

Single-sheets

Size	A4 (8.3 × 11.7 inches [210 × 297 mm]) A6 (4.1 × 5.8 inches [105 × 148 mm]) Letter (8.5 × 11 inches [216 × 279 mm]) Legal (8.5 × 14 inches [216 × 356 mm]) 8.5 × 13 inches [216 × 330 mm] 4 × 6 inches (102 × 152 mm) 5 × 7 inches (127 × 178 mm) 8 × 10 inches (203 × 254 mm) 3.5 × 5 inches (89 × 127 mm) Executive (7.25 × 10.5 inches [184 × 267 mm]) 16:9 wide (4 × 7.1 inches [102 × 181 mm]) Half Letter (5.5 × 8.5 inches [140 × 216 mm])
Paper types	Plain paper **Note:** Your product also supports compatible papers distributed by Epson. Select the link at the end of this topic to view a list of compatible Epson papers.
Weight	Plain paper: 17 lb (64 g/m^2) to 24 lb (90 g/m^2)

Envelopes

Size	No. 10 (4.1 × 9.5 inches [105 × 241 mm])
Paper types	Plain bond paper
Weight	20 lb (75 g/m^2) to 24 lb (90 g/m^2)

Parent topic: Technical Specifications

Related references

Compatible Epson Papers

Printable Area Specifications

Note: When printing borderless, quality may decline in the expanded printable area.

Single sheets

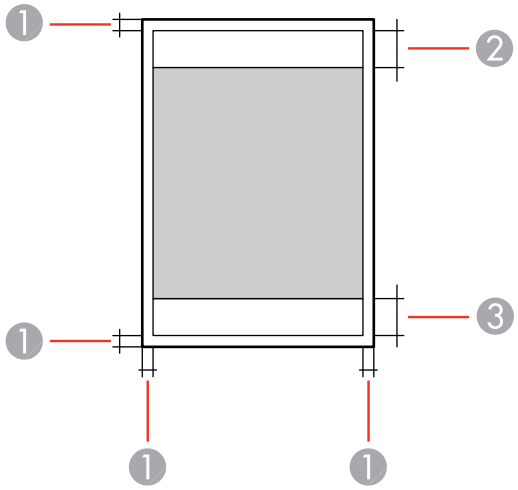

1 Top/bottom margins: 0.12 inch (3 mm)

2 Reduced print quality area/top: 1.61 inches (41 mm)

3 Reduced print quality area/bottom: 1.46 inches (37 mm)

Borderless

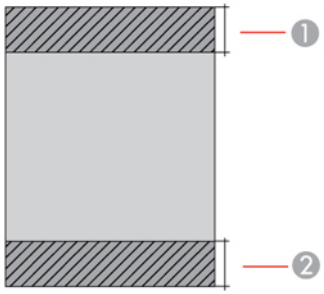

1 Reduced print quality area/top: 1.73 inches (44 mm)

2 Reduced print quality area/bottom: 1.57 inches (40 mm)

Envelopes

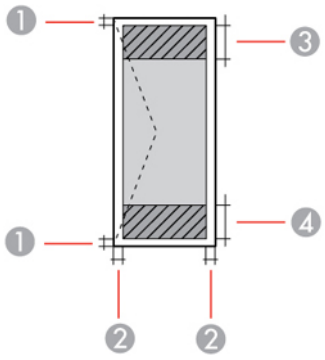

1 Left/right margins: 0.12 inch (3 mm)

2 Top/bottom: 0.20 inch (5 mm)

3 Reduced print quality area/left: 0.70 inch (18 mm)

4 Reduced print quality area/right: 1.61 inches (41 mm)

Parent topic: Technical Specifications

Scanning Specifications

Scanner type	Flatbed, color
Photoelectric device	CIS
Effective pixels	10200 × 14040 pixels (1200 dpi)
Document size	Maximum: 8.5 × 11.7 inches (216 × 297 mm)
	Scanner glass: US letter or A4
Scanning resolution	1200 dpi (main scan)
	2400 dpi (sub scan)

Output resolution	50 to 9600 in 1 dpi increments)
Image data	Color: 48 bits per pixel (16 bits per pixel per color) internal 24 bits per pixel (8 bits per pixel per color) external Grayscale: 16 bits per pixel internal 8 bits per pixel external Black and white: 16 bits per pixel internal 1 bit per pixel external
Light source	LED

Parent topic: Technical Specifications

Automatic Document Feeder (ADF) Specifications

Paper size	US letter, A4, legal, or 8.5 × 13 inches (216 × 330 mm) size
Paper type	Plain paper
Paper weight	17 lb (64 g/m^2) to 24 lb (90 g/m^2)
Loading capacity	Approximately 30 sheets; US letter or A4 size 10 sheets; legal or 8.5 × 13 inches (216 × 330 mm) size

Parent topic: Technical Specifications

Fax Specifications

Fax type	Black-and-white and color fax capability (ITU-T Super Group 3)
Supported lines	Standard analog (household) phone line PBX (Private Branch Exchange) telephone systems
Speed	Up to 33.6 kbps

Resolution	**Monochrome**
	Standard: 203 pixels per inch × 98 lines per inch (8 pixels per mm × 3.85 lines per mm)
	Fine: 203 pixels per inch × 196 lines per inch (8 pixels per mm × 7.7 lines per mm)
	Photo: 203 pixels per inch × 196 lines per inch (8 pixels per mm × 7.7 lines per mm)
	Color
	200 × 200 dpi
Page memory	Up to 100 pages (received ITU-T No. 1 chart in monochrome draft mode)
Redial	2 times (with 1 minute interval); specification may differ by country or region
Interface	RJ-11 Phone Line
	RJ-11 Telephone set connection

Parent topic: Technical Specifications

Ink Specifications

Note: Epson's warranties do not extend to any damage caused by the use of third-party ink or ink not designed for your printer.

The included initial ink bottles must be used for printer setup and are not for resale. The printer ships with full ink bottles and part of the ink from the first bottles is used to charge the print head. Yields vary considerably based on images printed, print settings, paper type, frequency of use and temperature.

Color	Black, Cyan, Magenta, Yellow
Ink life	Do not use if the date on the package has expired
Temperature	Storage: –4 to 104 °F (–20 to 40 °C)
	1 month at 104 °F (40 °C)
	Ink freezes at 5 °F (–15 °C)
	Ink thaws and is usable after approximately 2 hours at 77 °F (25 °C)

Parent topic: Technical Specifications

Related references

Ink Bottle and Maintenance Box Part Numbers

Dimension Specifications

Height	Stored: 9.1 inches (231 mm)
	Printing: 10 inches (255 mm)
Width	Stored: 14.8 inches (375 mm)
	Printing: 16.4 inches (417 mm)
Depth	Stored: 13.7 inches (347 mm)
	Printing: 19.8 inches (503 mm)
Weight (without ink or power cord)	15 lb (6.8 kg)

Parent topic: Technical Specifications

Electrical Specifications

Power supply rating	100 to 240 V
Rated frequency range	50/60 Hz
Rated current	0.4 to 0.2 A
Power consumption (with USB connection)	Standalone copying: Approximately 12 W (ISO/IEC24712)
	Ready mode: Approximately 5.4 W
	Sleep mode: Approximately 1 W
	Power off mode: Approximately 0.2 W

Parent topic: Technical Specifications

Environmental Specifications

Temperature	Operating: 50 to 95 °F (10 to 35 °C)
	Storage: –4 to 104 °F (–20 to 40 °C)
	1 month at 104 °F (40 °C)
Humidity	Operating: 20 to 80% RH
(without condensation)	Storage: 5 to 85% RH

Parent topic: Technical Specifications

Interface Specifications

Interface type	Hi-Speed USB (Device Class for computers)

Parent topic: Technical Specifications

Network Interface Specifications

Wi-Fi

Standard	IEEE 802.11 b/g/n; complies with either IEEE 802.11 b/g or IEEE 802.11 b/g/n, depending on purchase location
Security	WEP (64/128 bit)
	WPA2-PSK (AES); complies with WPA2 with support for WPA/WPA2 Personal
Frequency band	2.4 GHz
Communication mode	Infrastructure mode
	Wi-Fi Direct (Simple AP); not supported for IEEE 802.11b
Maximum radio frequency power transmitted	19.8 dBm (EIRP)

Ethernet

Standard	IEEE802.3i/u (10BASE-T); use a category 5e or higher STP (shielded twisted pair cable to prevent risk of radio interference IEEE802.3u (100BASE-TX) IEEE802.3az (Energy Efficient Ethernet); connected device should be IEEE802.3az compliant
Communication modes	Auto, 10Mbps Full duplex, 10Mbps Half duplex, 100Mbps Full duplex, 100 Mbps Half duplex
Connector	RJ-45

Security Protocol

SSL/TLS

HTTPS Server/Client, IPPS

Parent topic: Technical Specifications

Safety and Approvals Specifications

United States	Safety: UL60950-1 EMC: FCC part 15 Subpart B class B
Canada	Safety: CAN/CSA C22.2 No. 60950-1 EMC: CAN/CSA-CEI/IEC CISPR 22 Class B

This equipment contains the following wireless module:

- Manufacturer: Askey Computer Corporation.
- Type: WLU6320-D69 (RoHS)

This product conforms to Part 15 of FCC Rules and RSS-210 of the IC Rules. Epson cannot accept responsibility for any failure to satisfy the protection requirements resulting from a non-recommended modification of the product. Operation is subject to the following two conditions: (1) this device may not cause harmful interference, and (2) this device must accept any interference received, including interference that may cause undesired operation of the device.

To prevent radio interference to the licensed service, this device is intended to be operated indoors and away from windows to provide maximum shielding. Equipment (or its transmit antenna) that is installed outdoors is subject to licensing.

This equipment complies with FCC/IC radiation exposure limits set forth for an uncontrolled environment and meets the FCC radio frequency (RF) Exposure Guidelines in Supplement C to OET65 and RSS-102 of the IC radio frequency (RF) Exposure rules. This equipment should be installed and operated so that the radiator is kept at least 7.9 inches (20 cm) or more away from a person's body (excluding extremities: hands, wrists, feet and ankles).

Parent topic: Technical Specifications

Notices

Check these sections for important notices about your product.

Note: Epson offers a recycling program for end of life Epson products. Please go to this site (U.S) or this site (Canada) for information on how to return your Epson products for proper disposal.

Important Safety Instructions
FCC Compliance Statement
Binding Arbitration and Class Waiver
Trademarks
Copyright Notice

Important Safety Instructions

Before using your Epson product, read and follow these safety instructions.

General Product Safety Instructions
Wireless Connection Safety Instructions
LCD Screen Safety Instructions
Telephone Equipment Safety Instructions

Parent topic: Notices

General Product Safety Instructions

- Be sure to follow all warnings and instructions marked on the product.
- Use only the type of power source indicated on the product's label.
- Use only the power cord that comes with the product. Use of another cord may cause fires or shock. Do not use the cord with any other equipment.
- Make sure the AC power cord meets the relevant local safety standard.
- Place the product near a wall outlet where the plug can be easily unplugged.
- Avoid plugging the product into an outlet on the same circuit as a photo copier or air control system that regularly switches on and off, or on an outlet controlled by a wall switch or timer.
- Do not let the power cord become damaged or frayed. Place it to avoid abrasions, cuts, fraying, crimping, and kinking. Do not place objects on top of it and do not allow it to be stepped on or run over. Be careful to keep the cord straight at each end.

- If you use an extension cord with the product, make sure the total ampere rating of the devices plugged into the extension cord does not exceed the cord's ampere rating. Also, make sure the total ampere rating of all devices plugged into the wall outlet does not exceed the wall outlet's ampere rating.
- Always turn off the product using the power button, and wait until the power light stops flashing before unplugging the product or cutting off power to the electrical outlet.
- If you will not be using the product for a long period, unplug the power cord from the electrical outlet.
- Place the product on a flat, stable surface that extends beyond its base in all directions. It will not operate properly if it is tilted or at an angle.
- Allow space behind the product for the cables, and space above the product so that you can fully raise the document cover.
- Leave enough space in front of the product for the paper to be fully ejected.
- Avoid locations that are subject to rapid changes in heat or humidity, shocks or vibrations, or dust.
- Do not place or store the product outdoors.
- Do not place the product near excessive heat sources or in direct sunlight.
- Leave enough room around the product for sufficient ventilation. Do not block or cover openings in the case or insert objects through the slots.
- Keep the product away from potential sources of electromagnetic interference, such as loudspeakers or the base units of cordless telephones.
- Keep your product at least 8.7 inches (22 cm) away from cardiac pacemakers to prevent your product's radio waves from affecting the operation of the pacemaker.
- When connecting the product to a computer or other device with a cable, ensure the correct orientation of the connectors. Each connector has only one correct orientation. Inserting a connector in the wrong orientation may damage both devices connected by the cable.
- Do not touch the flat white cable or ink tubes inside the product.
- Do not move the print head by hand; this may damage the product.
- Do not put your hand inside the product while it is printing.
- Do not spill liquid on the product or use the product with wet hands.
- Do not use aerosol products that contain flammable gases inside or around the product. Doing so may cause fire.
- Do not press too hard on the document table when placing originals.

- Do not open the scanner section while the product is copying, printing, scanning, or performing any other functions.
- Be careful not to trap your fingers when closing the document cover or scanner.
- Except as specifically explained in your documentation, do not attempt to service or disassemble the product yourself.
- Unplug the product and refer servicing to qualified service personnel under the following conditions: if the power cord or plug is damaged; if liquid has entered the product; if the product has been dropped or the case damaged; if the product does not operate normally or exhibits a distinct change in performance. Adjust only those controls that are covered by the operating instructions.
- Before transporting the product, make sure that the print head is in the home (far right) position.
- When storing or transporting the product, do not tilt it, stand it on its side, or turn it upside down; otherwise, ink may leak.

Parent topic: Important Safety Instructions

Wireless Connection Safety Instructions

Radio waves from this product may adversely affect the operation of medical equipment or automatically controlled devices, such as pacemakers, automatic doors or fire alarms. When using this product near such devices or inside a medical facility, follow the directions from authorized staff members at the facility, and follow all posted warnings and directions on the device to avoid causing an accident.

Parent topic: Important Safety Instructions

LCD Screen Safety Instructions

- Use only a dry, soft cloth to clean the LCD screen. Do not use liquid or chemical cleansers.
- If the LCD screen is damaged, contact Epson. If the liquid crystal solution gets on your hands, wash them thoroughly with soap and water. If the liquid crystal solution gets into your eyes, flush them immediately with water. If discomfort or vision problems remain after a thorough flushing, see a doctor immediately.
- Do not press too hard on the LCD screen or subject it to heavy impacts.
- Do not use a pointy or sharp object, such as a pen or your fingernail, to operate the LCD screen.
- If the LCD screen chips or cracks, do not touch or attempt to remove the broken pieces; contact Epson for support.

Parent topic: Important Safety Instructions

Telephone Equipment Safety Instructions

When using telephone equipment, you should always follow basic safety precautions to reduce the risk of fire, electric shock, and personal injury, including the following:

- Do not use the Epson product near water.
- Avoid using a telephone during an electrical storm. There may be a remote risk of electric shock from lightning.
- Do not use a telephone to report a gas leak in the vicinity of the leak.

Caution: To reduce the risk of fire, use only a No. 26 AWG or larger telecommunication line cord.

Parent topic: Important Safety Instructions

FCC Compliance Statement

For United States Users

This equipment complies with Part 68 of the FCC rules and the requirements adopted by the Administrative Council for Terminal Attachments ("ACTA") . On the surface of this equipment is a label that contains, among other information, a product identifier in the format US:AAAEQ##TXXXX. If requested, this number must be provided to the telephone company.

Applicable certification jack Universal Service Order Codes ("USOC") for the equipment: RJ11C.

A plug and jack used to connect this equipment to the premises wiring and telephone network must comply with the applicable FCC Part 68 rules and requirements adopted by the ACTA. A compliant telephone cord and modular plug is provided with this product. It is designed to be connected to a compatible modular jack that is also compliant. See installation instructions for details.

The REN is used to determine the number of devices that may be connected to a telephone line. Excessive RENs on a telephone line may result in the devices not ringing in response to an incoming call. In most but not all areas, the sum of RENs should not exceed five (5.0). To be certain of the number of devices that may be connected to a line, as determined by the total RENs, contact the local telephone company. For products approved after July 23, 2001 , the REN for this product is part of the product identifier that has the format US:AAAEQ##TXXXX. The digits represented by ## are the REN without a decimal point (e.g., 03 is a REN of 0.3). For earlier products, the REN is separately shown on the label.

If this equipment causes harm to the telephone network, the telephone company will notify you in advance that temporary discontinuance of service may be required. But if advance notice isn't practical, the telephone company will notify the customer as soon as possible. Also, you will be advised of your right to file a complaint with the FCC if you believe it is necessary.

The telephone company may make changes in its facilities, equipment, operations or procedures that could affect the operation of the equipment. If this happens the telephone company will provide advance notice in order for you to make necessary modifications to maintain uninterrupted service.

If you have problems with this product and require technical or customer support, please visit www.epson.com for more information.

This product is not intended to be repaired by the customer. If you experience trouble connecting this equipment to a telephone line, please contact:

Name: Epson America, Inc.

Address: 3840 Kilroy Airport Way, Long Beach, CA 90806 U.S.A.

Telephone: (562) 981-3840

If the equipment is causing harm to the telephone network, the telephone company may request that you disconnect the equipment until the problem is resolved.

This equipment may not be used on coin service provided by the telephone company. Connection to party line service is subject to state tariffs. Contact the state public utility commission, public service commission or corporation commission for information.

If your home has specially wired alarm equipment connected to the telephone line, ensure the installation of this equipment does not disable your alarm equipment. If you have questions about what will disable alarm equipment, consult your telephone company or a qualified installer.

The Telephone Consumer Protection Act of 1991 makes it unlawful for any person to use a computer or other electronic device, including fax machines, to send any message unless such message clearly contains in a margin at the top or bottom of each transmitted page or on the first page of the transmission, the date and time it is sent and an identification of the business or other entity, or other individual sending the message and the telephone number of the sending machine or such business, other entity, or individual. (The telephone number provided may not be a 900 number or any other number for which charges exceed local or long-distance transmission charges.)

In order to program this information into your fax machine, click the link below for instructions on entering fax header information.

According to the FCC's electrical safety advisory, we recommend that you may install an AC surge arrester in the AC outlet to which this equipment is connected. Telephone companies report that electrical surges, typically lightning transients, are very destructive to customer terminal equipment connected to AC power sources and that this is a major nationwide problem.

This equipment has been tested and found to comply with the limits for a Class B digital device, pursuant to Part 15 of the FCC Rules. These limits are designed to provide reasonable protection against harmful interference in a residential installation. This equipment generates, uses, and can radiate radio frequency energy and, if not installed and used in accordance with the instructions, may cause harmful

interference to radio or television reception. However, there is no guarantee that interference will not occur in a particular installation. If this equipment does cause interference to radio and television reception, which can be determined by turning the equipment off and on, the user is encouraged to try to correct the interference by one or more of the following measures:

- Reorient or relocate the receiving antenna.
- Increase the separation between the equipment and receiver.
- Connect the equipment into an outlet on a circuit different from that to which the receiver is connected.
- Consult the dealer or an experienced radio/TV technician for help.

WARNING

The connection of a non-shielded equipment interface cable to this equipment will invalidate the FCC Certification or Declaration of this device and may cause interference levels which exceed the limits established by the FCC for this equipment. It is the responsibility of the user to obtain and use a shielded equipment interface cable with this device. If this equipment has more than one interface connector, do not leave cables connected to unused interfaces. Changes or modifications not expressly approved by the manufacturer could void the user's authority to operate the equipment.

For Canadian Users

1. This product meets the applicable Innovation, Science and Economic Development Canada technical specifications.

2. The Ringer Equivalence Number indicates the maximum number of devices allowed to be connected to a telephone interface. The termination of an interface may consist of any combination of devices subject only to the requirement that the sum of the RENs of all the devices does not exceed five.

CAN ICES-3(B)/NMB-3(B)

Le présent produit est conforme aux spécifications techniques applicables d'Innovation, Sciences et Développement économique Canada.

L'indice d'équivalence de la sonnerie (IES) sert à indiquer le nombre maximal de dispositifs qui peuvent être raccordés à une interface téléphonique. La terminaison d'une interface peut consister en une combinaison quelconque de dispositifs, à la seule condition que la somme des IES de tous les dispositifs n'excède pas cinq.

CAN ICES-3(B)/NMB-3(B)

Parent topic: Notices

Related tasks

Using the Fax Setup Wizard

Binding Arbitration and Class Waiver

1. DISPUTES, BINDING INDIVIDUAL ARBITRATION, AND WAIVER OF CLASS ACTIONS AND CLASS ARBITRATIONS

1.1 **Disputes**. The terms of this Section 1 shall apply to all Disputes between you and Epson. The term "Dispute" is meant to have the broadest meaning permissible under law and includes any dispute, claim, controversy or action between you and Epson arising out of or relating to this Agreement, Epson branded products (hardware and including any related software), or other transaction involving you and Epson, whether in contract, warranty, misrepresentation, fraud, tort, intentional tort, statute, regulation, ordinance, or any other legal or equitable basis. "DISPUTE" DOES NOT INCLUDE IP CLAIMS, or more specifically, a claim or cause of action for (a) trademark infringement or dilution, (b) patent infringement, (c) copyright infringement or misuse, or (d) trade secret misappropriation (an "IP Claim"). You and Epson also agree, notwithstanding Section 1.6,that a court, not an arbitrator, may decide if a claim or cause of action is for an IP Claim.

1.2 **Binding Arbitration**. You and Epson agree that all Disputes shall be resolved by binding arbitration according to this Agreement. **ARBITRATION MEANS THAT YOU WAIVE YOUR RIGHT TO A JUDGE OR JURY IN A COURT PROCEEDING AND YOUR GROUNDS FOR APPEAL ARE LIMITED**. Pursuant to this Agreement, binding arbitration shall be administered by JAMS, a nationally recognized arbitration authority, pursuant to its code of procedures then in effect for consumer related disputes, but excluding any rules that permit joinder or class actions in arbitration (for more detail on procedure, see Section 1.6 below). You and Epson understand and agree that (a) the Federal Arbitration Act (9 U.S.C. §1, et seq.) governs the interpretation and enforcement of this Section 1, (b) this Agreement memorializes a transaction in interstate commerce, and (c) this Section 1 shall survive termination of this Agreement.

1.3 **Pre-Arbitration Steps and Notice**. Before submitting a claim for arbitration, you and Epson agree to try, for sixty (60) days, to resolve any Dispute informally. If Epson and you do not reach an agreement to resolve the Dispute within the sixty (60) days), you or Epson may commence an arbitration. Notice to Epson must be addressed to: Epson America, Inc., ATTN: Legal Department, 3840 Kilroy Airport Way, Long Beach, CA 90806 (the "Epson Address"). The Dispute Notice to you will be sent to the most recent address Epson has in its records for you. For this reason, it is important to notify us if your address changes by emailing us at EAILegal@ea.epson.com or writing us at the Epson Address above. Notice of the Dispute shall include the sender's name, address and contact information, the facts giving rise to the Dispute, and the relief requested (the "Dispute Notice"). Following receipt of the Dispute Notice, Epson and you agree to act in good faith to resolve the Dispute before commencing arbitration.

1.4 **Small Claims Court**. Notwithstanding the foregoing, you may bring an individual action in the small claims court of your state or municipality if the action is within that court's jurisdiction and is pending only in that court.

1.5 **WAIVER OF CLASS ACTIONS AND CLASS ARBITRATIONS. YOU AND EPSON AGREE THAT EACH PARTY MAY BRING DISPUTES AGAINST THE OTHER PARTY ONLY IN AN INDIVIDUAL CAPACITY, AND NOT AS A PLAINTIFF OR CLASS MEMBER IN ANY CLASS OR REPRESENTATIVE PROCEEDING, INCLUDING WITHOUT LIMITATION FEDERAL OR STATE CLASS ACTIONS, OR CLASS ARBITRATIONS. CLASS ACTION LAWSUITS, CLASS-WIDE ARBITRATIONS, PRIVATE ATTORNEY-GENERAL ACTIONS, AND ANY OTHER PROCEEDING WHERE SOMEONE ACTS IN A REPRESENTATIVE CAPACITY ARE NOT ALLOWED. ACCORDINGLY, UNDER THE ARBITRATION PROCEDURES OUTLINED IN THIS SECTION, AN ARBITRATOR SHALL NOT COMBINE OR CONSOLIDATE MORE THAN ONE PARTY'S CLAIMS WITHOUT THE WRITTEN CONSENT OF ALL AFFECTED PARTIES TO AN ARBITRATION PROCEEDING.**

1.6 **Arbitration Procedure**. If you or Epson commences arbitration, the arbitration shall be governed by the rules of JAMS that are in effect when the arbitration is filed, excluding any rules that permit arbitration on a class or representative basis (the "JAMS Rules"), available at http://www.jamsadr.com or by calling 1-800-352-5267, and under the rules set forth in this Agreement. All Disputes shall be resolved by a single neutral arbitrator, and both parties shall have a reasonable opportunity to participate in the selection of the arbitrator. The arbitrator is bound by the terms of this Agreement. The arbitrator, and not any federal, state or local court or agency, shall have exclusive authority to resolve all disputes arising out of or relating to the interpretation, applicability, enforceability or formation of this Agreement, including any claim that all or any part of this Agreement is void or voidable. Notwithstanding this broad delegation of authority to the arbitrator, a court may determine the limited question of whether a claim or cause of action is for an IP Claim, which is excluded from the definition of "Disputes" in Section 1.1 above. The arbitrator shall be empowered to grant whatever relief would be available in a court under law or in equity. The arbitrator may award you the same damages as a court could, and may award declaratory or injunctive relief only in favor of the individual party seeking relief and only to the extent necessary to provide relief warranted by that party's individual claim. In some instances, the costs of arbitration can exceed the costs of litigation and the right to discovery may be more limited in arbitration than in court. The arbitrator's award is binding and may be entered as a judgment in any court of competent jurisdiction.

You may choose to engage in arbitration hearings by telephone. Arbitration hearings not conducted by telephone shall take place in a location reasonably accessible from your primary residence, or in Orange County, California, at your option.

a) Initiation of Arbitration Proceeding. If either you or Epson decides to arbitrate a Dispute, both parties agree to the following procedure:

(i) Write a Demand for Arbitration. The demand must include a description of the Dispute and the amount of damages sought to be recovered. You can find a copy of a Demand for Arbitration at http://www.jamsadr.com ("Demand for Arbitration").

(ii) Send three copies of the Demand for Arbitration, plus the appropriate filing fee, to: JAMS, 500 North State College Blvd., Suite 600 Orange, CA 92868, U.S.A.

(iii) Send one copy of the Demand for Arbitration to the other party (same address as the Dispute Notice), or as otherwise agreed by the parties.

b) Hearing Format. During the arbitration, the amount of any settlement offer made shall not be disclosed to the arbitrator until after the arbitrator determines the amount, if any, to which you or Epson is entitled. The discovery or exchange of non-privileged information relevant to the Dispute may be allowed during the arbitration.

c) Arbitration Fees. Epson shall pay, or (if applicable) reimburse you for, all JAMS filings and arbitrator fees for any arbitration commenced (by you or Epson) pursuant to provisions of this Agreement.

d) Award in Your Favor. For Disputes in which you or Epson seeks $75,000 or less in damages exclusive of attorney's fees and costs, if the arbitrator's decision results in an award to you in an amount greater than Epson's last written offer, if any, to settle the Dispute, Epson will: (i) pay you $1,000 or the amount of the award, whichever is greater; (ii) pay you twice the amount of your reasonable attorney's fees, if any; and (iii) reimburse you for any expenses (including expert witness fees and costs) that your attorney reasonably accrues for investigating, preparing, and pursuing the Dispute in arbitration. Except as agreed upon by you and Epson in writing, the arbitrator shall determine the amount of fees, costs, and expenses to be paid by Epson pursuant to this Section 1.6d).

e) Attorney's Fees. Epson will not seek its attorney's fees and expenses for any arbitration commenced involving a Dispute under this Agreement. Your right to attorney's fees and expenses under Section 1.6d) above does not limit your rights to attorney's fees and expenses under applicable law; notwithstanding the foregoing, the arbitrator may not award duplicative awards of attorney's fees and expenses.

1.7 **Opt-out. You may elect to opt-out (exclude yourself) from the final, binding, individual arbitration procedure and waiver of class and representative proceedings specified in this Agreement by sending a written letter to the Epson Address within thirty (30) days of your assent to this Agreement (including without limitation the purchase, download, installation of the Software or other applicable use of Epson Hardware, products and services) that specifies (i) your name, (ii) your mailing address, and (iii) your request to be excluded from the final, binding individual arbitration procedure and waiver of class and representative proceedings specified in this Section 1. In the event that you opt-out consistent with the procedure set forth above, all other terms shall continue to apply, including the requirement to provide notice prior to litigation.**

1.8 **Amendments to Section 1**. Notwithstanding any provision in this Agreement to the contrary, you and Epson agree that if Epson makes any future amendments to the dispute resolution procedure and class action waiver provisions (other than a change to Epson's address) in this Agreement, Epson will obtain your affirmative assent to the applicable amendment. If you do not affirmatively assent to the applicable amendment, you are agreeing that you will arbitrate any Dispute between the parties in accordance with the language of this Section 1 (or resolve disputes as provided for in Section 1.7, if you timely elected to opt-out when you first assented to this Agreement).

1.9 **Severability**. If any provision in this Section 1 is found to be unenforceable, that provision shall be severed with the remainder of this Agreement remaining in full force and effect. **The foregoing shall not apply to the prohibition against class or representative actions as provided in Section 1.5. This means that if Section 1.5 is found to be unenforceable, the entire Section 1 (but only Section 1) shall be null and void.**

Parent topic: Notices

Trademarks

EPSON® is a registered trademark, EPSON Exceed Your Vision is a registered logomark, and Epson Connect™ is a trademark of Seiko Epson Corporation.

Epson iPrint™ and Remote Print™ are trademarks of Seiko Epson Corporation.

Windows is a registered trademark of Microsoft Corporation in the United States and/or other countries.

Apple, App Store, AirPrint, AirPrint logo, iPad, iPhone, iPod touch, Mac, macOS, and OS X are trademarks of Apple Inc., registered in the U.S. and other countries.

Google® is a registered trademark and Android™, Chromebook™, Gmail™, Google Chrome™, Google Cloud Print™, Google Drive™, and Google Play™ are trademarks of Google LLC.

Wi-Fi Direct® is a registered trademark of Wi-Fi Alliance®.

General Notice: Other product names used herein are for identification purposes only and may be trademarks of their respective owners. Epson disclaims any and all rights in those marks.

EPSON®
EXCEED YOUR VISION

Parent topic: Notices

Copyright Notice

All rights reserved. No part of this publication may be reproduced, stored in a retrieval system, or transmitted in any form or by any means, electronic, mechanical, photocopying, recording, or otherwise, without the prior written permission of Seiko Epson Corporation. The information contained herein is designed only for use with this Epson product. Epson is not responsible for any use of this information as applied to other products.

Neither Seiko Epson Corporation nor its affiliates shall be liable to the purchaser of this product or third parties for damages, losses, costs, or expenses incurred by purchaser or third parties as a result of:

accident, misuse, or abuse of this product or unauthorized modifications, repairs, or alterations to this product, or (excluding the U.S.) failure to strictly comply with Seiko Epson Corporation's operating and maintenance instructions.

Seiko Epson Corporation shall not be liable for any damages or problems arising from the use of any options or any consumable products other than those designated as Original Epson Products or Epson Approved Products by Seiko Epson Corporation.

Seiko Epson Corporation shall not be held liable for any damage resulting from electromagnetic interference that occurs from the use of any interface cables other than those designated as Epson approved Products by Seiko Epson Corporation.

This information is subject to change without notice.

libTIFF Software Acknowledgment
A Note Concerning Responsible Use of Copyrighted Materials
Default Delay Times for Power Management for Epson Products
Copyright Attribution

Parent topic: Notices

libTIFF Software Acknowledgment

Copyright © 1988-1997 Sam Leffler

Copyright © 1991-1997 Silicon Graphics, Inc.

Permission to use, copy, modify, distribute, and sell this software and its documentation for any purpose is hereby granted without fee, provided that (I) the above copyright notices and this permission notice appear in all copies of the software and related documentation, and (ii) the names of Sam Leffler and Silicon Graphics may not be used in any advertising or publicity relating to the software without the specific, prior written permission of Sam Leffler and Silicon Graphics.

THE SOFTWARE IS PROVIDED "AS-IS" AND WITHOUT WARRANTY OF ANY KIND, EXPRESS, IMPLIED OR OTHERWISE, INCLUDING WITHOUT LIMITATION, ANY WARRANTY OF MERCHANTABILITY OR FITNESS FOR A PARTICULAR PURPOSE.

IN NO EVENT SHALL SAM LEFFLER OR SILICON GRAPHICS BE LIABLE FOR ANY SPECIAL, INCIDENTAL, INDIRECT OR CONSEQUENTIAL DAMAGES OF ANY KIND, OR ANY DAMAGES WHATSOEVER RESULTING FROM LOSS OF USE, DATA OR PROFITS, WHETHER OR NOT ADVISED OF THE POSSIBILITY OF DAMAGE, AND ON ANY THEORY OF LIABILITY, ARISING OUT OF OR IN CONNECTION WITH THE USE OR PERFORMANCE OF THIS SOFTWARE.

Parent topic: Copyright Notice

A Note Concerning Responsible Use of Copyrighted Materials

Epson encourages each user to be responsible and respectful of the copyright laws when using any Epson product. While some countries' laws permit limited copying or reuse of copyrighted material in certain circumstances, those circumstances may not be as broad as some people assume. Contact your legal advisor for any questions regarding copyright law.

Parent topic: Copyright Notice

Default Delay Times for Power Management for Epson Products

This product will enter sleep mode after a period of nonuse. This is to ensure that the product meets Energy Star standards of energy efficiency. More energy savings can be achieved by setting the time to sleep to a shorter interval.

Parent topic: Copyright Notice

Copyright Attribution

© 2019 Epson America, Inc.

1/19

CPD-56457R1

Parent topic: Copyright Notice