2 IN 1 HEATER/ FAN
OWNER'S MANUAL

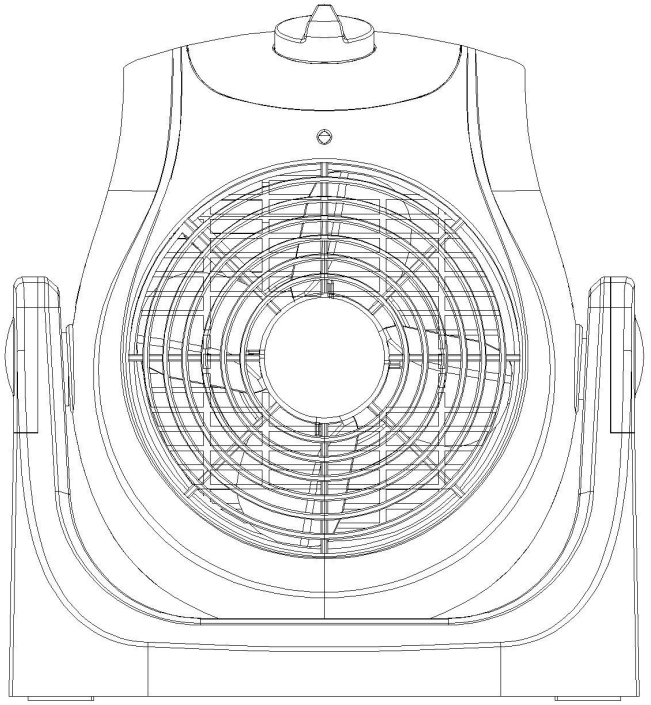

Thank you for choosing our 2 in 1 Heater/ Fan. This user manual will provide you with valuable information necessary for the proper care and maintenance of your new product.

Please take a few moments to thoroughly read the instructions and familiarize yourself with all the operational aspects of your new product.

INTRODUCTION

Please take a few minutes to read this manual carefully.

Proper maintenance and operation of this machine can provide better service.

TABLE OF CONTENTS

SECTION 1
SAFETY TIPS & WARNINGS PAGES 4-5

SECTION 2
PARTS & ACCESSORIES PAGES 6
SPECIFICATIONS PAGES 6

SECTION 3
SAFETY FEATURES PAGES 7

SECTION 4
PRODUCT DIAGRAM & PREPARATION PAGES 8

SECTION 5
OPERATION INSTRUCTIONS PAGES 9-10

SECTION 6
MAINTENANCE PAGES 11

SECTION 7
STORAGE PAGES 11

SECTION 8
TROUBLESHOOTING PAGES 11

⚠ SAFETY TIPS & WARNINGS

TO ENSURE THE BEST PERFORMANCE FROM YOUR HEATER, PLEASE READ AND SAVE THE FOLLOWING INSTRUCTIONS.

When using electrical appliances, basic precautions should always be followed to reduce the risk of fire, electric shock, injury to persons, and hyperthermia, including the following:

1. CAUTION: Risk of Electric Shock. DO NOT open or try to repair the product yourself.
2. This product may get hot when in use. To avoid burns, DO NOT let bare skin touch hot surfaces. If provided, use handles when moving this product.
3. Keep combustible materials, such as furniture, pillows, bedding, paper, clothes, and curtains at least 3 ft from the front of the product and keep them away from the sides, top, and rear. DO NOT place towels or other objects on the product.
4. Extreme caution is necessary when any product is used by or near children or the disabled, or when the product is left operating and unattended.
5. DO NOT operate any product with a damaged cord or after the product malfunctions, has been dropped or damaged in any manner. Return product to authorized service facility for examination, electrical or mechanical adjustment, or repair.
6. This product is not intended for use in bathrooms, laundry areas and similar indoor locations. NEVER locate product where it may fall into a bathtub or other water container. To protect against electrical hazards, DO NOT immerse in water or other liquids.
7. DO NOT touch the control panel or plug with a wet hand.
8. DO NOT run cord under carpeting. DO NOT cover cord with throw rugs, runners, or similar coverings. Arrange cord away from traffic area and where it will not be tripped over.
9. DO NOT insert or allow foreign objects to enter any ventilation or exhaust opening as this may cause an electric shock or fire, or damage the product.
10. To prevent a possible fire, DO NOT block the air intakes or exhaust in any manner. DO NOT use on soft surfaces, like a bed, where openings may become blocked.

11. A product has hot and arcing or sparking parts inside. DO NOT use in areas where gasoline, paint, explosive and/or flammable liquids are used or stored. Keep unit away from heated surfaces and open flames.
12. Always plug products directly into a wall outlet/receptacle. Never use with an extension cord or relocatable power tap (outlet/power strip).
13. To avoid fire or shock hazard, plug the unit directly into a 120 V AC electrical outlet.
14. To disconnect product, turn controls to OFF, then remove plug from outlet. Pull firmly on the plug, DO NOT unplug by pulling on the cord.
15. Always unplug the unit before moving or cleaning, or whenever the product is not in use.
16. Use only for intended household use as described in this manual. Any other use not recommended by the manufacturer may cause fire, electric shock, or injury to persons. The use of attachments not recommended or sold by unauthorized dealers may cause hazards.
17. Always use on a dry, level surface. Use on floor only.
18. DO NOT use outdoors.
19. WARNING: To reduce the risk of fire or electric shock, DO NOT use this unit with any solid-state speed control device.
20. DO NOT attempt to repair or adjust any electrical or mechanical functions on this unit. Doing so will void your warranty. The inside of the unit contains no user serviceable parts. Qualified personnel should perform all servicing only.
21. Hyperthermia can result in death. Symptoms of hyperthermia include high body temperature, headache, nausea, vomiting, tiredness, dizziness, fainting, and rapid pulse. If you begin to experience symptoms related to hyperthermia, turn off the heater and seek medical attention.
22. To avoid excessive room temperatures which can cause hyperthermia: DO NOT leave product running unattended in a confined space around infants, or individuals with reduced physical, sensory, or mental capabilities.

PARTS & ACCESSORIES

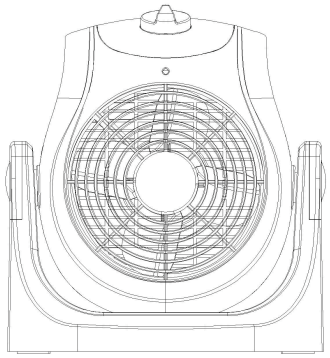

2 in 1 Heater/ Fan

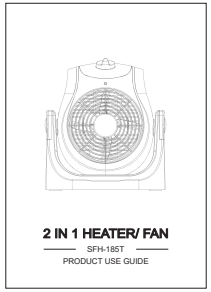

Instruction

SPECIFICATIONS

Voltage Rating	120V (60 Hz)
Power Consumption	1500W
Unit Size	9.44 in. (W) x 6 in. (D) x 10.63 in. (H)
Unit Weight	2.42 lbs

SAFETY FEATURES

Overheat Safety Feature

This product is equipped with an overheat safety feature. When the product s internal components reach a certain temperature that could cause overheat and possible fire, the product will automatically shut off.

WARNING: It is normal for the power cord to feel warm to the touch; however, a loose fit between the outlet and the plug may cause overheating of the plug. If this occurs, try inserting the plug into a different outlet. Contact a qualified electrician to inspect the original outlet for damage.

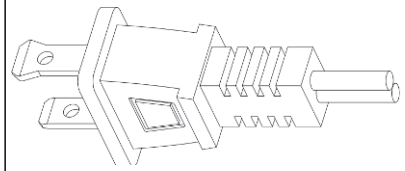

THIS APPLIANCE HAS A POLARIZED PLUG (one blade is wider than the other). To reduce the risk of electric shock, this plug is intended to fit in a polarized outlet only one way. If the plug does not fit fully in the outlet, reverse the plug. If it still does not fit, contact a qualified electrician to install the proper outlet.

DO NOT ATTEMPT TO MODIFY THIS PLUG OR DEFEAT THIS SAFETY FEATURE IN ANY WAY.

PRODUCT DIAGRAM

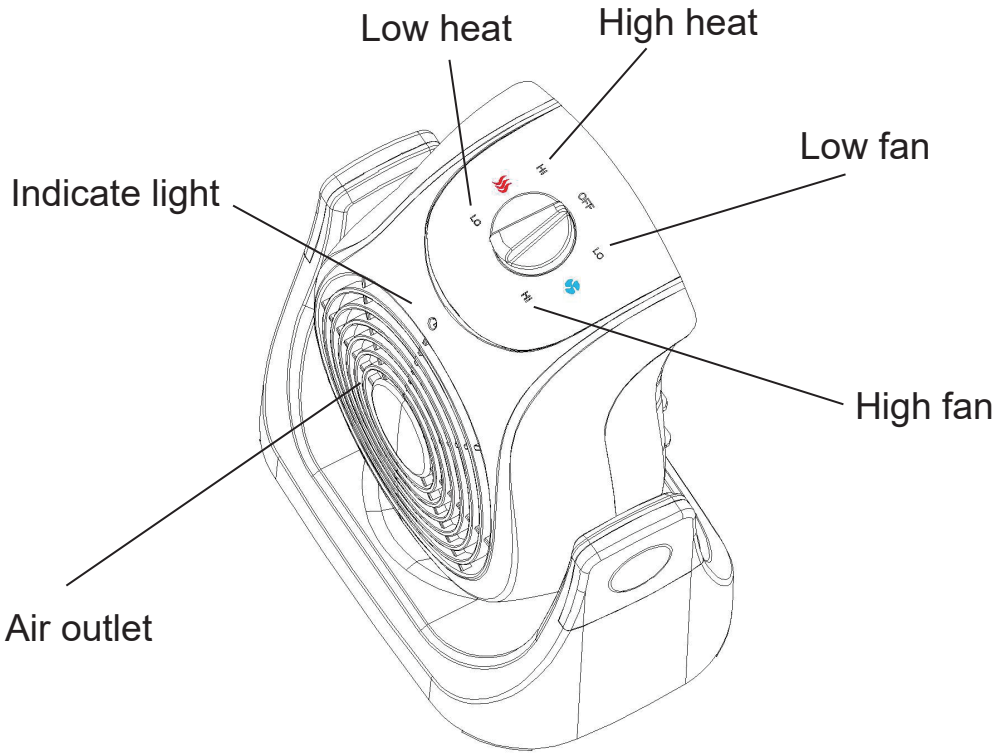

PREPARATION

Place the product on a firm, level surface and plug into a 120V 60Hz power outlet. Only operate product in upright position.

OPERATION INSTRUCTIONS

Plug in the product and get it started;

The product can be used to 2 seasons: SUMMER AND WINTER.

1. Rotate the heat/fan settings. The product has 2 heat settings and 2 fan settings (Picture-1);

2. Select Fan mode.

Users can turn the switch clockwise to the fan mode(Marked in blue), can choose “Lo” (18W) or “Hi” (26W) according to their needs.

3. Select Heat mode.

Users can turn the switch anti-clockwise to the heat mode(Marked in red), can choose “Lo” (750W) or “Hi” (1500W) according to their needs.

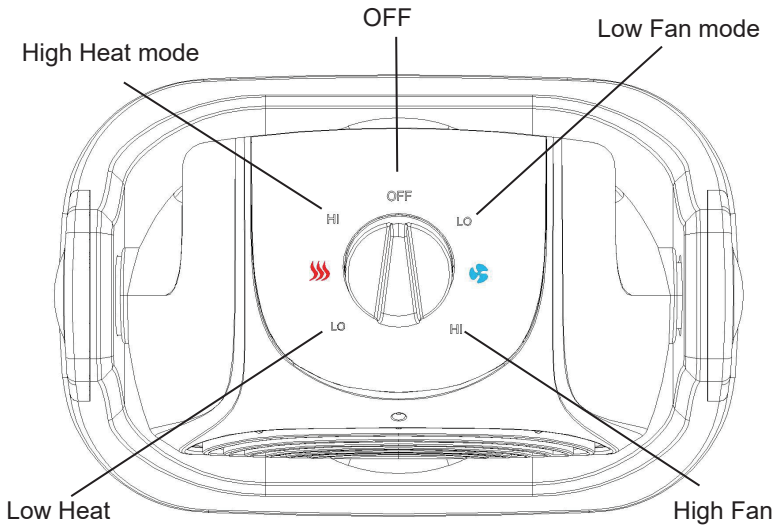

Picture-1

4. The product has a handle in the back for easy carrying. (Picture-2)

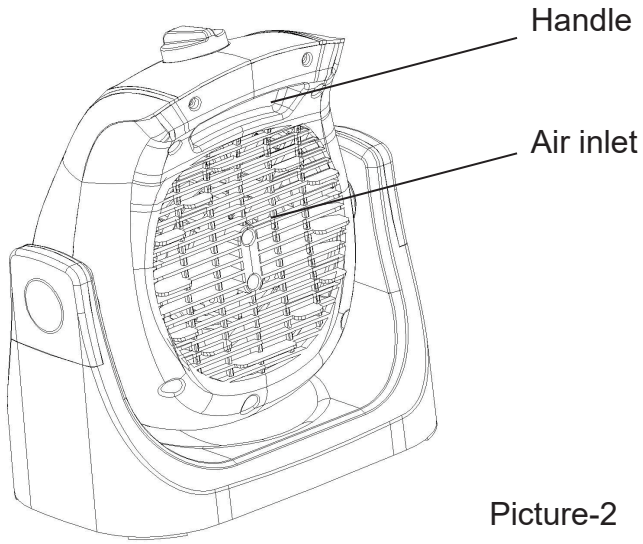

Picture-2

5. The product can rotate to 45° upwards. 18° each setting.(Picture-3)

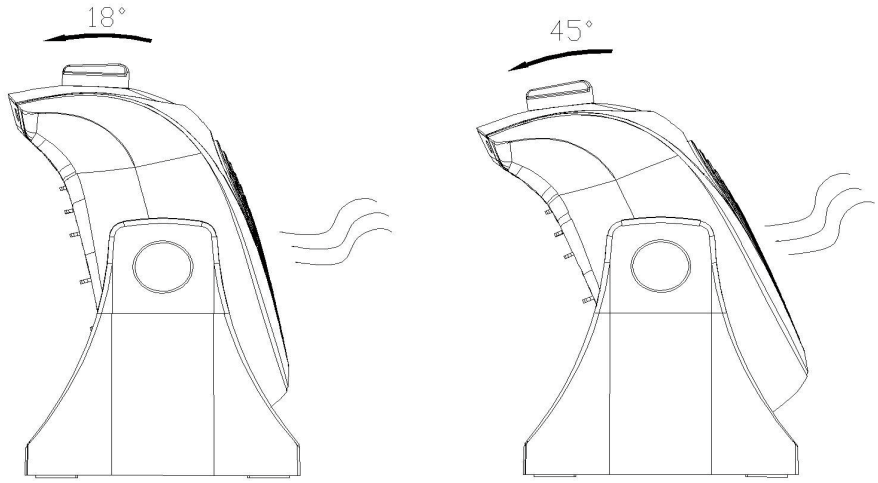

Picture-3

MAINTENANCE

1.Unplug the unit and let it cool completely.

2.To keep the unit clean, the outer shell may be cleaned with a soft, damp cloth. You may use a mild detergent if necessary. After cleaning, dry the unit with a soft cloth.

CAUTION: DO NOT let liquid enter the product.

3.DO NOT use alcohol, gasoline, abrasive powders, furniture polish, or rough brushes to clean the product. This may cause damage or deterioration to the surface of the product.

4.DO NOT immerse the product in water.

5.Wait until the unit is completely dry before use.

STORAGE

Store the product in a cool, dry location when not in use. To prevent dust and dirt build-up, use the original packaging to repack the unit.

TROUBLESHOOTING

If the product will not operate, please check the following before seeking repair of service:

1. Check if the power cord is plugged into an electrical outlet, if not, plug in.
2. Check if electricity to the main fuse is working.