ICEMAN

Slush-Ease™ MAX
64 oz. Slushy Maker

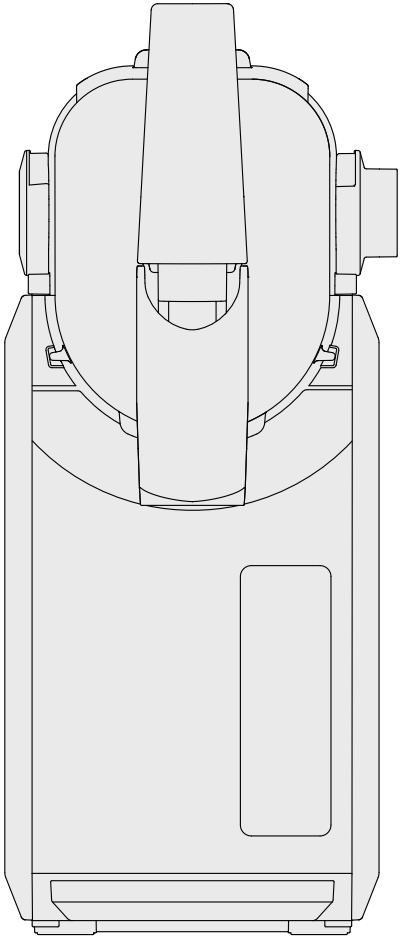

RJ62-20A-SERIES

Get to Know Your Slushy Maker

1. Dispenser handle
2. Tank with MIN (16 oz) and MAX (64 oz) markings*
3. Fill hatch
4. Auger
5. Tank drip tray
6. Cooling cylinder
7. Tank locking lever
8. Control panel
9. Cup drip tray
10. Coaster
11. Dispenser nozzle
12. Removable nozzle cover

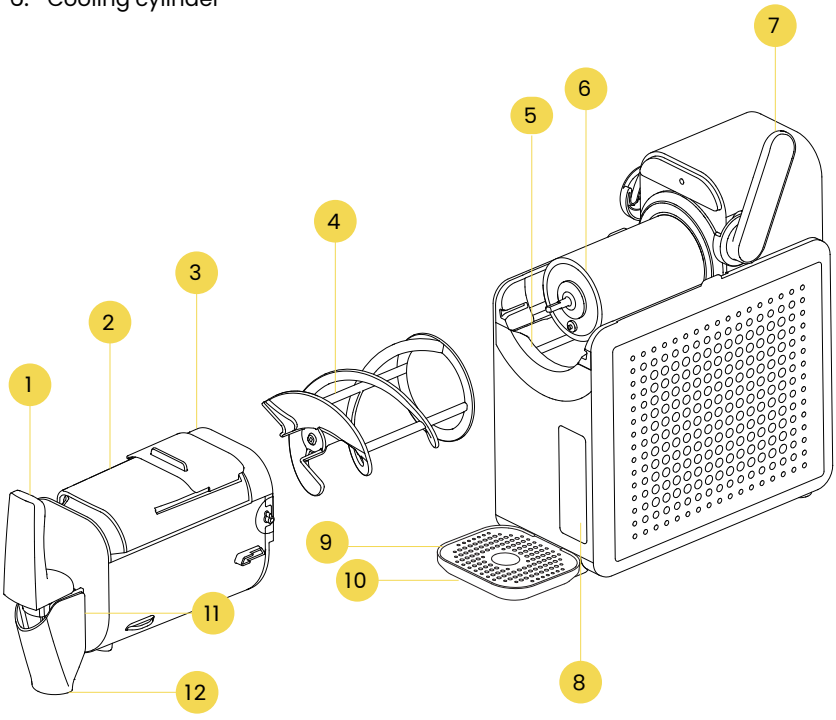

*The unit requires a minimum of 16 fl oz (2 cups) of slushy mixture and a maximum of 64 fl oz (8 cups).

READ ALL INSTRUCTIONS BEFORE USE

For your safety and continued enjoyment of this product, always read the instruction manual before using.

Control Panel

1. Unlocked tank warning light
2. Ready light
3. Power button
4. Overfreeze error light
5. Error light
6. Add Sugar warning light
7. Defrost | Clean button
8. Slushy preset buttons
9. Thickness indicator lights
10. Thickness control buttons*
11. Start button
12. Stop button

* Press and hold both + and - for 3 seconds when in Standby mode to mute the unit's beeps. Press and hold again to turn the sound back on.

SAFETY INSTRUCTIONS & IMPORTANT SAFEGUARDS

When using electrical appliances, basic safety precautions should always be followed, including:

1. Read all instructions.
2. Remove all bags and packaging from appliance before use.
3. Never leave appliance unattended when in use.
4. Make sure the appliance is cleaned thoroughly before using.
5. **DO NOT** use appliance for other than its intended use. For household use only. Do not use outdoors.
6. To prevent electric shock, do not submerge the cord, plugs, motor unit, or any electrical parts in water or other liquids.
7. **DO NOT** operate this appliance with a damaged cord, damaged plug, after the appliance malfunctions, is dropped, or damaged in any manner. Contact Customer Support for replacement, examination, or repair.
8. **DO NOT** place appliance on or near a hot gas burner, hot electric burner, or in a heated oven.
9. Refrain from using attachments that are not recommended by Iceman, as this may result in fire, electric shock, or personal injury.
10. **DO NOT** let the cord touch hot surfaces, or hang over the edges of tables or counters.
11. This appliance is not intended for use by persons (including children) with reduced physical, sensory or mental capabilities, or lack of experience and knowledge, unless they have been given supervision or instruction concerning use of the appliance by a person responsible for their safety.
12. Children should be supervised to ensure that they do not play with the appliance.
13. Avoid contact with moving parts.
14. Always be sure to unplug the appliance from the outlet prior to moving, cleaning, storage, and when not in use.
15. Always place the unit on a firm and stable surface prior to use.

SAFETY INSTRUCTIONS & IMPORTANT SAFEGUARDS

16. Improper use of the appliance can result in property damage or even in personal injury.
17. Never use abrasive cleaning agents when cleaning this unit.
18. Unit should remain upright at all times. If unit is turned on its side or upside down, you will need to put it in upright position and wait 2 hours before using.
19. **WARNING:** Keep ventilation openings, in the appliance enclosure or in the built-in structure, clear of obstruction. When using appliance, make sure both sides and back of it are at least four inches away from walls.
20. **WARNING: DO NOT** use mechanical devices or other means to accelerate the defrosting process, other than those recommended by the manufacturer.
21. **WARNING: DO NOT** damage the refrigerant circuit. This warning is only applicable to appliances with refrigerating circuits which are ACCESSIBLE to the user.
22. When positioning the appliance, ensure the supply cord is not trapped or damaged.
23. **DO NOT** locate multiple portable socket-outlets or portable power supplies at the rear of the appliance.
24. DANGER: Risk of child entrapment. Before you throw away your old refrigerator or freezer:
    Take off the doors
    Leave the shelves in place so that children may not easily climb inside.

SAVE THESE INSTRUCTIONS FOR HOUSEHOLD USE ONLY

SAFETY INSTRUCTIONS & IMPORTANT SAFEGUARDS

WARNING: Improper use of the grounding plug can result in electric shock.

GROUNDING INSTRUCTIONS
This appliance must be grounded. In the event of an electrical short circuit, grounding reduces the risk of electric shock by providing an escape wire for the electric current. To protect against electrical shock, this appliance is equipped with a cord having a 3-prong grounding-type plug for insertion into a proper grounding-type electrical outlet.

DO NOT alter the plug for use in a 2-prong outlet. If the plug will not fit into an outlet, have a proper outlet installed by a qualified electrician.

Short Cord Instructions
A short power-supply cord is provided to reduce the hazards of entanglement or tripping over a longer cord. Longer detachable power-supply cords or extension cords are available and may be used if care is exercised in their use. If a longer detachable power-supply extension cord is used:

1. The marked electrical rating of the extension cord should be at least as great as the electrical rating of the appliance;
2. If the appliance is of the grounded type, the extension cord should be a grounding-type 3-wire cord; and
3. The longer cord should be arranged so that it will not drape over the countertop or tabletop where it can be pulled on by children or tripped over.

California Proposition 65:
(Applicable for California Residents only)
WARNING: Cancer and Reproductive Harm
www.P65Warnings.ca.gov

Do not place the appliance on a stovetop or any other heatable surface, even if stovetop is not on. Doing so is a fire hazard.

SAFETY INSTRUCTIONS & IMPORTANT SAFEGUARDS

Power Cord Safety Tips

1. Never pull or yank on the cord or the appliance.
2. To insert the plug, grasp it firmly and guide it into the outlet.
3. To disconnect the appliance, grasp the plug and remove it from the outlet.
4. Never use the product if the power cord shows signs of abrasion or excessive wear. Contact Customer Support for additional guidance and support.
5. Never wrap the cord tightly around the appliance, as this could place undue stress on the cord where it enters the appliance and cause it to fray and break.

DO NOT OPERATE THE APPLIANCE IF THE POWER CORD SHOWS ANY DAMAGE OR IF THE APPLIANCE WORKS INTERMITTENTLY OR STOPS WORKING ENTIRELY.

Warning: Risk of fire/ flammable materials

Before First Use

1. Remove all packaging materials and check to ensure that all parts and accessories are accounted for. Read and remove all stickers, except for the rating label, which should remain on the unit.
2. Set unit upright on a flat surface. Let it stand for at least 2 hours before using, to allow the refrigerant to settle.
3. Remove and hand wash the tank, auger, tank drip tray, cup drip tray and coaster. Holding the dispenser nozzle cover at the bottom, pull it out and away from the unit and hand wash it.
4. Wipe down the unit housing with a soft, damp cloth. Do not immerse the unit in water or other liquids. Never use abrasive cleaning agents, which can damage the finish.

Quick Start: How to Make a Slushy

1. Keep the unit in an upright position for at least 2 hours before starting. Ensure the tank drip tray is pushed all the way in. Slide the auger onto the cooling cylinder, rotating the auger until it fully seats itself on the pin of the cooling cylinder (the metal point of the cylinder will be flush with the front of the auger).

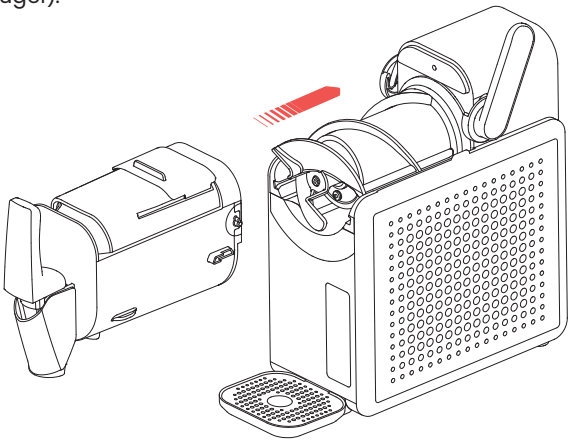

2. Slide the tank on over the auger, pushing it all the way in. Lock it in place with the tank locking lever.

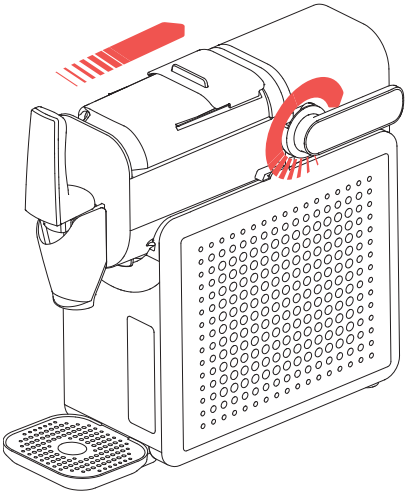

3. Plug in the unit and press the **Power** button. **NOTE:** the unlocked tank icon will display and the unit will beep if the tank is not locked into place. Open the tank fill hatch and pour your slushy mixture into the tank. Make sure the mixture is between the MIN and MAX markings on the tank. Be sure slushy mixture is cool or room temperature. For the fastest processing, prechill the ingredients. **CAUTION:** Do NOT fill the tank with only water, which can damage the machine.

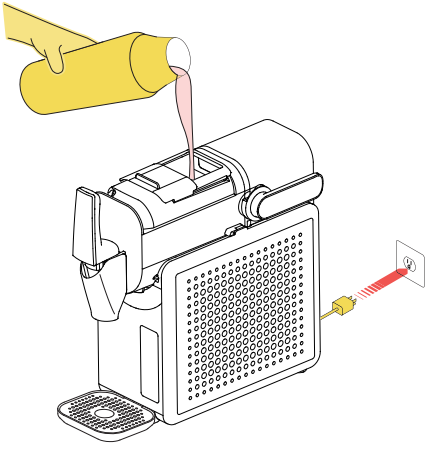

4. Use the preset selection buttons to choose your slushy type. The preset will automatically choose the typical thickness, although you can modify it with the **Thickness** +/- buttons. (See chart on p. 12 for our recommendations of the best thicknesses for popular drinks).

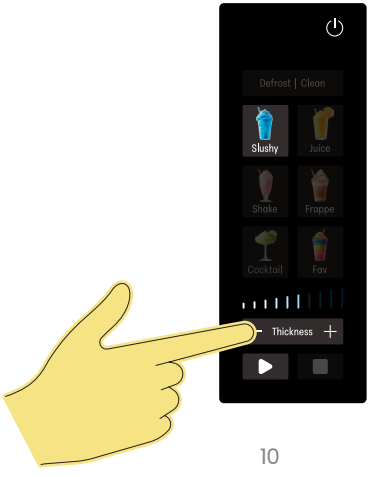

5. Press **Start**. The unit will begin chilling and mixing the slushy mixture. The chilling time depends on your chosen preset, as well as the volume and temperature of your ingredients, but usually ranges between 30 and 40 minutes.

6. When the slushy is ready, the unit will beep, and the **Ready** light will illuminate. Place a cup under the nozzle and gently pull down the dispenser to serve the slushy. The unit will hold the slushy at the final temperature for up to 12 hours, while the auger rotates to keep it well mixed. You can continue to dispense slushies throughout this holding period, but if you use the **Shake** or **Frappe** preset, it's best to dispense right away because the mixture will get foamy if it holds too long in the tank. **DO NOT** turn off the unit until all of the slushy is dispensed.

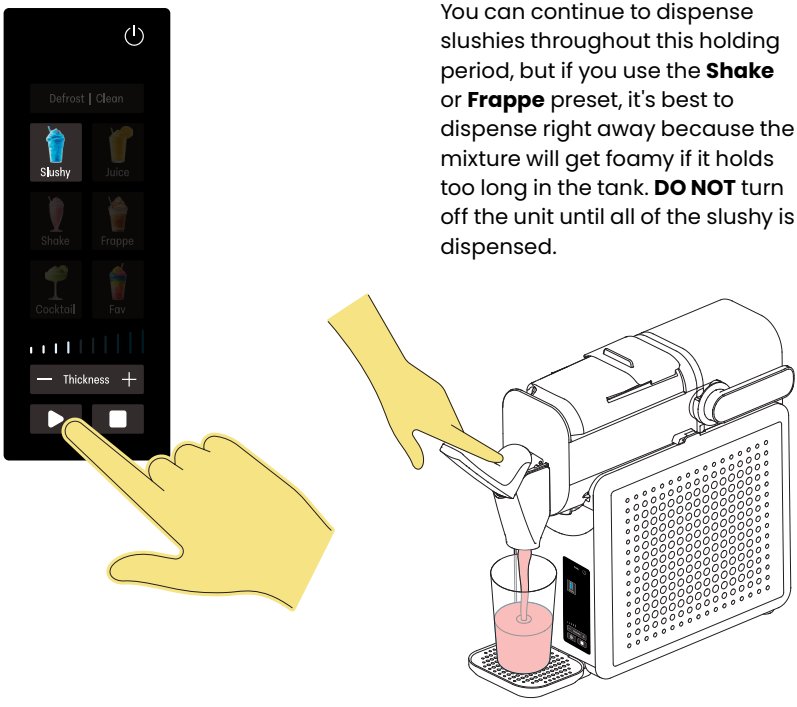

NOTE: The slushy will be at its thickest immediately after it's ready. If the slushy is so thick that it won't come out, you can simply wait a few minutes, or for faster thinning, press the **Defrost** button and let it run for a few minutes. When the slushy reaches your desired thickness, press the original preset button and reduce thickness by one or two notches on the display, then press **Start**.

Slushy Presets Guide

Preset	Ingredients*	Suggested Thickness
Slushy	Soft drinks, such as Coke	Adjust to 3 bars.
Slushy	Limeade, Lemonade	Adjust to 4 bars.
Slushy	Sweetened iced tea	Adjust to 2 bars.
Slushy	Kombucha (non-alcoholic)	Adjust to 1 bar.
Slushy	Energy drink, such as Red Bull	Adjust to 2 bars.
Juice	Sports Drink, such as Gatorade	Adjust to 1 bar.
Juice	Orange juice	Adjust to 4 bars.
Juice	Apple cider or juice	Adjust to 8 bars.
Juice	Pineapple juice	Adjust to 8 bars.
Juice	Watermelon juice	Adjust to 1 bar.
Juice	Cranberry juice	Adjust to 7 bars.
Shake	Bottled smoothies	Adjust thickness to 7 bars.
Shake	Bottled protein shake	Adjust thickness to 5 bars. **Note:** If it is artificially sweetened, add sugar or allulose syrup (see p. 13).
Frappe	Bottled coffee-and-milk drink, such as Starbucks Latte.	Adjust to 5 bars.
Cocktail	Hard seltzer	Adjust to 1 bar.
Cocktail	Beer (IPA - 7% alcohol)**	Adjust to 2 bars.
Cocktail	Wine (rose or white)	Adjust to 6 bars.
Cocktail	32 oz Margarita mixer + 10 oz tequila + 18 oz water	Adjust to 5 bars.
Cocktail	24 oz Piña Colada mixer + 10 oz rum + 30 oz water	Adjust to 5 bars.
Cocktail	16 oz Strawberry Daiquiri mixer + 10 oz rum + 30 oz water	Adjust to 5 bars.

*The unit requires a minimum of 16 fl oz (2 cups) of slushy mixture and a maximum of 64 fl oz (8 cups).

**Thickness will vary by the beer's ABV; adjust the bars accordingly. Avoid beers with extremely low ABV (below 2.8%) AND low sugar, which can cause overfreeze.

How to Save a Favorite

You can save a frequently-used setting in order to program your unit with one touch. To program a favorite, set the unit to your favorite parameters (preset plus specific thickness), then press and hold the **Fav** button for 3 seconds. To use the favorite, simply press the **Fav** button, then **Start**. To replace the favorite with a new one, set the unit with the new parameters, then press and hold **Fav** again for 3 seconds; the new favorite will be saved over the old one.

Slushy Science: Getting the Perfect Thickness

Three factors affect the thickness of your slushy: temperature, sugar content, and alcohol content (for alcoholic slushies). Though presets have a set thickness, you can manually adjust it, which lets you experiment with ingredients.

Temperature

The slushy maker's target temperature is represented on the control panel by thickness bars. The more bars, the lower the temperature and the thicker the slushy. Slushies are at their thickest immediately after the cycle ends, so if a batch is too thick, let it run on Defrost for a few minutes, then return to the preset but adjust the thickness down by a notch or two. If it's too thin, increase the thickness and run the cycle again. If these adjustments don't give you the thickness you want, the next step is to play with your ingredients...

Sugar Content

Sugar is essential for making your mixture freeze into a slushy rather than a block of solid ice. Since freezing mutes flavors, sugar is is also a good way to make the flavor pop, even if the thickness is fine. Your mixture must be at least 4% sugar to successfully slush. For bottled ingredients, the "Total Sugars" listed on the nutrition label should be 1 g of sugar for every 1 oz of serving size. Allulose syrup can also be used, but it is the ONLY sugar substitute that works. Diet sodas and unsweetened drinks will ALWAYS need sugar or allulose added. Slushies with allulose generally need a slightly lower thickness than those with sugar.

Add Sugar Warning: If the unit detects that the mixture is freezing too quickly, the Add Sugar warning light will illuminate and the unit will beep every 10 seconds. To correct it, dispense all of the mixture into a bowl, whisk in granulated sugar (make sure it's fully dissolved), simple syrup, agave nectar, honey, maple syrup, a sweetened beverage, or allulose syrup. Then return the mixture to the tank and restart the unit on the chosen preset.

If the cycle continues running with no sugar added, the **Overfreeze error light** will illuminate and the unit will automatically go into Defrost mode. After 10 minutes, you'll be able to restart the freeze cycle with your original preset, but be sure to add some form of sugar (see above) before restarting.

Sweetener Guidelines

Use this chart to determine how much sugar or allulose needs to be in your slushy mixture per serving.

Serving Size	Minimum Total Sugar	OR Minimum Added Allulose Syrup
8 oz	8 g	½ Tbsp
12 oz	11 g	1 Tbsp
20 oz	18 g	1½ Tbsp

Alcohol Content

Alcohol inhibits freezing, which means if your mixture has too much alcohol—more than 16%—the slushy will be too thin or won't freeze at all. Beers, hard seltzers, most wines, and cocktails made following the instructions of bottled mixes are all under this limit. Fortified wines (such as port) and very strong cocktails are not. To adjust the alcohol content, dilute the mixture with any non-alcoholic liquid: water, juice, cocktail mixer, soda, seltzer, etc.

Hard Alcohol/Spirit Guidelines

Use this chart to determine how much hard alcohol (rum, vodka, etc.) to add for frozen cocktails. The rest of the recipe should be made up of non-alcoholic liquids. Wine can be used in larger proportions, while beer and hard seltzer can be used on their own (refer to page 12 for examples).

Total Recipe Volume	Maximum Hard Alcohol Volume
3 cups	½ cup
4½ cups	¾ cup
6 cups	1¼ cups

Keep It Clean

The automatic cleaning cycle makes it easy to keep your unit in top condition. Perform this cleaning cycle after each use of the slushy maker:

1. Dispense any remaining slushy from the tank.
2. Add a few drops of dishwashing liquid to the tank, then add water up to the MAX fill line.
3. On the control panel, select **Clean**, then press **START**.
4. The auger will swish soapy water around the tank. When the cycle is finished, the unit will beep and the **Ready** light will illuminate.
5. Dispense all of the soapy water into a 2-quart (or larger) container and discard.
6. Unlock and remove the tank. Wipe down the cylinder with a warm damp cloth.
7. Rinse the tank and auger thoroughly, then dry with a soft cloth.
8. To remove the dispensing nozzle cover, grasp it at the bottom and pull it up and away from the nozzle.
9. Wash the tank drip tray, cup drip tray, dispensing nozzle cover, and coaster with mild soap, then rinse and dry thoroughly.
10. While the dispensing nozzle's cover is still off, wipe down the nozzle with a damp paper towel.
11. All removable parts are also top-rack dishwasher safe. If washing the tank in the dishwasher, be sure to use a setting **without** a heated dry cycle.
12. Be sure the parts are completely dry before reassembling for storage.

Slushy Inspiration

As the presets suggest, you can make a fantastic slushy with just one ingredient: beer, wine, soft drinks, fruit juice, etc. But you can have even more fun by creating your own custom mixes to slush-ify. (Take a look at Slushy Science on p. 13 for tips on getting the right temperature and proportions, and advice about what to adjust if it's not quite perfect the first time.) Here are a few tasty ideas to get you started:

Margarita

In a large measuring cup or pitcher, combine 4 cups limeade, 1½ cups tequila, 1 cup water, ⅔ cup orange juice, ⅔ cup simple syrup, and ¼ cup fresh lime juice. Add to the slushy maker tank. Process on the **Cocktail** setting, adjusting the thickness to 5 bars. Dispense into a margarita glass with a salted rim, and garnish with a slice of lime.

Variation: For a spicy margarita, use a jalapeno-infused simple syrup, serve in a glass rimmed with tajin (chili-salt) and garnish with a slice of jalapeño.

Strawberry Frosé
In a large measuring cup, combine 5 cups rosé wine, 1½ cups water, 1 cup strawberry purée and the juice from 1 lime (about 2 Tbsp). Stir until well mixed, then add to the slushy maker tank. Process on the **Cocktail** preset with thickness adjusted to 5 bars. Serve in a wine glass, garnished with a strawberry.

Frozen Latte
In a large measuring cup, combine 4½ cups cold-brew coffee, 2½ cups whole milk, 1 cup heavy cream and ⅔ cup sugar. (For a stronger coffee flavor, reduce the amount of cream and add more cold brew). Stir until well mixed, then add to the slushy maker tank. Process on the **Frappe** setting at 5 bars thickness. Dispense into a glass and garnish with whipped cream, if desired.

Blue Raspberry Lemonade Slushy
In a large measuring cup or pitcher, combine 1 64-oz bottle of lemonade and 1 packet unsweetened Kool-Aid Blue Raspberry Lemonade. Stir until well mixed, then add to the slushy maker tank. Process on the **Slushy** setting with thickness adjusted to 1 bar. Dispense into a tall glass and garnish with a cherry.

Having Trouble?

NOTE: Several problems are indicated by the ⚠ Error light and a certain number of thickness bars.

Problem	Potential Cause	Solution
Slushy is too thin.	Slushy is too warm or contains too much alcohol, fat, or sugar.	Increase the thickness by one or two notches and continue to run for 10 to 20 minutes. If the mixture contains alcohol, it may need to be diluted with nonalcoholic ingredients. If it does not contain alcohol, add a little water or another low-fat/low-sugar ingredient.
Slushy is too thick or not dispensing well.	Slushy is too cold.	Run the Defrost function for a few minutes until slushy thins, then return to the preset and lower the thickness by a notch or two.
Slushy tank overflows when using dairy ingredients or beer.	These beverages produce foam during mixing, which can add to overall volume.	When using these ingredients, fill the tank to no more than 48 oz. (6 cups) the first time you try a recipe.
Unlocked tank warning displays and unit is beeping, even though the tank is locked in place.	A damaged tank is preventing the unit from recognizing that the tank is installed.	Contact Customer Support.
Auger scrapes the inside of the tank or flings liquid onto the sides.	Auger could need cleaning or be deformed.	Remove, clean and re-install auger. If the auger is dented, warped, or chipped, contact Customer Support for a replacement auger.
⚠	Temperature sensor error.	Contact Customer Support.
⚠ +	Warm or hot liquid added to the tank.	Empty tank. Be sure to only add cool or room-temperature liquid to the tank.
⚠ +	Compressor is damaged or other problem with refrigeration.	Contact Customer Support.
⚠ +	Motor is damaged.	Contact Customer Support.
⚠ +	1. Tank is empty or below the minimum fill level. 2. Alcohol content is too high.	1. Be sure the slushy mixture comes at least to the MIN (16 oz) marking. 2. Be sure to use no more than 16% alcohol in your slushy mixture.
Add Sugar	The unit has detected low sugar content, which can cause overfreeze if not corrected.	Add sugar to bring the ratio up to at least 4% sugar. See p. 13 for more details.
(overfreeze warning)	Temperature has dropped too low due to uncorrected low sugar content.	Unit will automatically switch to defrost mode. After 10 minutes you can restart your original preset, but be sure to add sugar to the mixture first (see p. 13).

Notes

Terms & Conditions

Limited Warranty
RJ Brands, LLC d/b/a Iceman™ offers a limited 1-year Warranty (the "Warranty") available on sales through authorized distributors and retailers only. Please note that this Warranty becomes valid from the date of initial retail purchase and that the Warranty is nontransferable and applies only to the original purchaser.

This Warranty is void without proof of purchase within the United States and Canada. Please be aware that this Warranty supersedes all other warranties and constitutes the entire agreement between the consumer and Iceman™. Any changes to the Terms and Conditions of this Warranty must be in writing, signed by a representative of Iceman™. No other party has the right or ability to alter or change the Terms and Conditions of this Warranty.

We may ask you to please submit, via email, photos and/or video of the issue you are experiencing. This is to help us better assess the matter and possibly offer a quick fix. Photos and/or video may also be required to determine Warranty eligibility.

We encourage you to register your product. Registering can make the Warranty process easier and can keep you informed of any updates or recalls on your product. To register, follow the directions on the Iceman™ Warranty Registration page in the Iceman™ User Guide. Please retain your proof of purchase even after registering. In the event that you do not have proof of your purchase date, we may declare your Warranty void or we may, at our sole discretion, apply the date of manufacture as the purchase date for purposes of this Warranty.

What the Warranty Covers

- **Manufacturer Defects**
  Iceman™ products are warranted against defects in material and workmanship, under normal household use, for a period of 1 year from the date of purchase when used in accordance with the directions listed in the Iceman™ User Guide. If your product does not work as it should, please contact Customer Support at Chillwithiceman.com so that we may assist you.

This Warranty Does Not Cover

- **Misuse**
  Damage that occurs from neglectful or improper use of products, including, but not limited to, damage that occurs as a result of usage with incompatible voltage, regardless of whether the product was used with a converter or adapter. See Safety Instructions in the Iceman™ User Guide for information on proper use of product;

- **Poor Maintenance**
  General lack of proper care. We encourage you to take care of your Iceman™ products so that you may continue to enjoy them. Please see Keep It Clean directions in this Iceman™ User Guide for information on proper maintenance;

- **Commercial Use**
  Damage that occurs from commercial use;

- **Normal Wear and Tear**
  Damage or degradation expected to occur due to normal use over time;

- **Altered Products**
  Damage that occurs from alterations or modifications by any entity other than Iceman™ such as the removal of the rating label affixed to the product;

- **Catastrophic Events**
  Damage that occurs from fire, floods, or natural disasters; or

- **Loss of Interest**
  Claims of loss of interest or enjoyment.

For product information, please visit us at Chillwithiceman.com.

EXCEPT WHERE SUCH LIABILITY IS REQUIRED BY LAW, THIS WARRANTY DOES NOT COVER, AND ICEMAN™ SHALL NOT BE LIABLE FOR, INCIDENTAL, INDIRECT, SPECIAL, OR CONSEQUENTIAL DAMAGES, INCLUDING WITHOUT LIMITATION, DAMAGE TO, OR LOSS OF USE OF THE PRODUCT, OR LOST SALES OR PROFITS OR DELAY OR FAILURE TO PERFORM THIS WARRANTY OBLIGATION. THE REMEDIES PROVIDED HEREIN ARE THE EXCLUSIVE REMEDIES UNDER THIS WARRANTY, WHETHER BASED ON CONTRACT, TORT OR OTHERWISE.

Warranty Registration

What do I need to register my product?

- Contact Information
- Model Number (see example below)
- Proof of Purchase (online confirmation, receipt, gift receipt)
- Date Code (see example below)
- Access Code (see example below)

ICEMAN

Model/Modele: XXXXX
Conveyor toaster
120v~60hz 1800W
CONFORMS TO UL STD. 1026
CERTIFIED TO CSA STD.C22.2 No.64
CAUTION: DO NOT IMMERSE IN WATER
ATTENTION: NE PAS PLONGER DANS L'EAU
WARNING: TO PREVENT ELECTRIC SHOCK,
UNPLUG BEFORE CLEANING
PRÉAVIS: POUR ÉVITER LES CHOCS ÉLECTRIQUES,
DÉBRANCHEZ L'APPAREIL AVANT DE L'UTILISER
READ INSTRUCTIONS BEFORE USING
LISEZ LES INSTRUCTIONS AVANT DE L'UTILISER
HOUSEHOLD USE ONLY
POUR USAGE DOMESTIQUE SEULEMENT

Date Code:
0000
Access Code:
Xxxxxxxx

NOTE: Label depicted here is an example.
Please see label on your product for actual model/date code/access code.

How do I register my product?

All you need to do is fill out a simple Iceman™ registration form.
You can easily access the form in one of the two ways listed below:

- Visit Chillwithiceman.com.
- Scan the QR code to the right to access site.

ICEMAN

Slush-Ease™ MAX
64 oz. Slushy Maker

RJ6220ASERIESUG06I325

Iceman™ is a trademark of RJ Brands, LLC.

Slush-Ease™ is a trademark of RJ Brands, LLC.