HOOD

AFM080700 AFM090700 AFM080710 AFM090710

GAGGENAU

You can find additional information and explanations online.
Scan the QR code on the title page.



Table of contents

1 IMPORTANT SAFETY INSTRUCTIONS 3
1.1 Safety definitions 3
1.2 General information 3
1.3 Safe use 3
1.4 Child safety 5
1.5 Proper installation and maintenance 5
1.6 State of California Proposition 65 Warnings 6

2 Preventing material damage 7

3 Environmental protection and energy-saving 7
3.1 Disposal of packaging 7
3.2 Saving energy 7

4 Operating modes 7
4.1 Exhaust-air mode 7
4.2 Air recirculation mode 7

5 Familiarizing yourself with your appliance 8
5.1 Appliance 8
5.2 Control elements 8
5.3 Fan setting 8

6 Before using for the first time 8
6.1 The Home Connect® app distinguishes between gas appliances and induction appliances 8
6.2 Setting an operating mode 9

7 Basic Operation 9
7.1 Switching the appliance on or off 9
7.2 Lighting 9
7.3 Selecting the fan setting 9
7.4 Switching on cleaning mode 9
7.5 Switching off cleaning mode 9

8 Additional functions in the Home Connect® app 10
8.1 Selecting manual mode or automatic mode 10
8.2 Saturation indicator for the grease filter 10
8.3 Saturation indicator for the odor filter 10
8.4 Interval ventilation 10
8.5 Fan run-on 10

9 Home Connect® 10
9.1 Setting up the Home Connect® app 10
9.2 Setting up Home Connect® 10
9.3 Resetting the connection 10
9.4 Software update 11
9.5 Remote diagnostics 11
9.6 Data Protection 11

10 Cleaning and maintenance 11
10.1 Cleaning agents 11
10.2 Cleaning the appliance 11
10.3 Cleaning the controls 12
10.4 Grease filter 12

11 Troubleshooting 13
11.1 Malfunctions 13

12 Accessories 13

13 Disposal 14
13.1 Disposal of your old appliance 14

14 Customer Service 14
14.1 Model number (E-Nr.), production number (FD) and consecutive numbering (Z-Nr.) 14
14.2 Rating plate location 14

15 STATEMENT OF LIMITED PRODUCT WARRANTY 14
15.1 What this warranty covers & Who it applies to 14
15.2 How long the warranty lasts 15
15.3 Repair/replace as your exclusive remedy 15
15.4 Out of warranty product 15
15.5 Warranty exclusions 15
15.6 Obtaining warranty service 16
15.7 Product information 16

Recursos y ayuda en línea en español 17

IMPORTANT SAFETY INSTRUCTIONS
READ AND SAVE THESE INSTRUCTIONS

Read all of the instructions carefully before using the appliance. In order to reduce the risk of fire, electric shocks and personal injuries when using the appliance, follow the basic safety precautions, including the following safety instructions.

1.1 Safety definitions

Here you can find explanations of the safety signal words used in this manual.

⚠ WARNING
This indicates that death or serious injuries may occur as a result of non-observance of this warning.

⚠ CAUTION
This indicates that minor or moderate injuries may occur as a result of non-observance of this warning.

NOTICE
This indicates that damage to the appliance or property may occur as a result of non-compliance with this advisory.

Note: This alerts you to important information.

1.2 General information

Here you can find general information about this manual.

- Please read this manual carefully.
- Observe the safety instructions and warnings.
- Keep the manual and the product information in a safe place for future reference or for the next owner.
- Check the appliance for damage after unpacking it. Do not connect the appliance if it has been damaged in transit.

This appliance is intended for use up to a maximum height of 13,100 feet (4000 meters) above sea level.

1.3 Safe use

WARNING
When properly cared for, your new appliance has been designed to be safe and reliable.

- ▶ Read all instructions carefully before use. These precautions will reduce the risk of burns, electric shock, fire, and injury to persons.
- ▶ When using kitchen appliances, basic safety precautions must be followed, including those in the following pages.

CAUTION
For general ventilating use only.

- ▶ To avoid a fire or explosion hazard, do not use to exhaust hazardous or explosive materials and vapors.

WARNING
TO REDUCE THE RISK OF A RANGE TOP GREASE FIRE

- ▶ Never Leave Surface Units Unattended at High Settings - Boilovers cause smoking and greasy spillovers that may ignite. Heat oils slowly on low or medium settings.
- ▶ Always turn hood ON when cooking at high heat.
- ▶ Clean ventilating fans frequently. Grease should not be allowed to accumulate on fan or filter.
- ▶ Use proper pan size. Always use cookware appropriate for the size of the surface element.
- ▶ Do not flambé under the extractor hood or work with a naked flame. When switched on, the extractor hood draws flames into the filter. There is a risk of fire due to deposits on the grease filter!

A fire could occur during cooking.

- ▶ Always have a working smoke detector near the kitchen.
- ▶ Have an appropriate fire extinguisher available, nearby, highly visible and easily accessible near the appliance.

In the event that personal clothing or hair catches fire, drop and roll immediately to extinguish flames.
Do Not Use Water on Grease Fires.

- ▶ Smother fire or flame or use dry chemical or foam-type extinguisher.

There is a risk of fire, if cleaning is not carried out in accordance with the instructions in the section on cleaning and maintenance →*Page 11*.
Grease deposits in the grease filter can ignite.

- ▶ Clean the grease filter at least every two months or more often if necessary.
- ▶ Never operate the appliance without the grease filter.

Grease deposits in the grease filter can catch fire.

- ▶ Never work with a naked flame near the appliance (e.g. flambéing).
- ▶ Install the unit near a heat-producing appliance for solid fuels (e.g. wood or coal) only if there is a closed, non-detachable cover. There must be no flying sparks.

When gas burners are in operation without any cookware placed on them, they can build up a lot of heat.
A ventilation appliance installed above the cooktop may become damaged or catch fire.

- ▶ Only operate the gas burners with cookware on them.

During simultaneous use of multiple gas burners, a great deal of heat is created.
A ventilation device located above it can become damaged or catch fire.

- ▶ Never use two gas burners together at maximum heat for longer than 15 minutes.
- ▶ One large burner with over 17,000 BTU/hr (5 kW) (wok) is equal to the wattage of two gas burners.

Operating several gas burners at the same time gives rise to a great deal of heat.
The ventilation appliance may become damaged or catch fire.

- ▶ The ventilation appliance must only be combined with gas burners that do not exceed the maximum total output of 61,000 BTU/hr (18 kW). If 41,000 BTU/hr (12 kW) is exceeded, the local regulations concerning room ventilation, room size, and combination with ventilation devices in exhaust and recirculating operation must be followed.

Hot oil and fat catch fire fast.

- ▶ Never leave hot oil and fat unsupervised.
- ▶ Never extinguish a fire with water.

IMPORTANT SAFETY INSTRUCTIONS
READ AND SAVE THESE INSTRUCTIONS

- ▶ Switch off the cooking position.
- ▶ Suffocate flames carefully with a lid, a fire blanket or similar.

WARNING
The accessible parts get hot during operation.
- ▶ Never touch hot parts.
- ▶ Keep children away.

Be sure the entire appliance (including the grease filters and light bulbs, if applicable) has cooled and grease has solidified before attempting to clean any part of the appliance.

WARNING
Do not operate any extractor hood with a damaged cord or plug.
- ▶ Contact the manufacturer or an authorized service provider for repair.

Do not run cord under carpeting.
- ▶ Do not cover cord with throw rugs, runners, or similar coverings.
- ▶ Do not route cord under furniture or appliances.
- ▶ Arrange cord away from traffic area and where it will not be tripped over.

WARNING
Items placed on the appliance may fall down.
- ▶ Do not place any objects on the appliance.

Storage in or on Appliance - The use of corrosive chemicals in heating or cleaning will damage the appliance and could result in injury.
- ▶ Flammable materials, corrosive chemicals, vapors or non-food products should not be stored or used in an oven or on or near surface units.
- ▶ The appliance is specifically designed for use when heating or cooking food.

This appliance is intended for normal family household use only. It is not approved for outdoor use. See the Statement of Limited Product Warranty. If you have any questions, contact the manufacturer.

WARNING
TO REDUCE THE RISK OF INJURY TO PERSONS IN THE EVENT OF A RANGE TOP GREASE FIRE, OBSERVE THE FOLLOWING.
- ▶ SMOTHER FLAMES with a close-fitting lid, cookie sheet, or metal tray, then turn off the burner. BE CAREFUL TO PREVENT BURNS. If the flames do not go out immediately, EVACUATE AND CALL THE FIRE DEPARTMENT.
- ▶ NEVER PICK UP A FLAMING PAN – You may be burned.
- ▶ DO NOT USE WATER, including wet dishcloths or towels – a violent steam explosion will result.
- ▶ Use an extinguisher ONLY if:
  - You know you have a Class ABC extinguisher, and you already know how to operate it.
  - The fire is small and contained in the area where it started.
  - The fire department is being called.
  - You can fight the fire with your back to an exit.

WARNING
Flames can be drawn into the ventilation system.
- ▶ Whenever possible, do not operate the ventilation system during a cooktop fire. However, do not reach through fire to turn it off.

WARNING
The light emitted by LED lights is very dazzling, and can damage the eyes.
- ▶ Do not look directly into the switched-on LED lights for longer than 100 seconds.

WARNING
Moisture intrusion may cause an electric shock.
- ▶ Do not use any steam cleaners or high-pressure cleaners to clean the appliance.

WARNING
TO REDUCE THE RISK OF FIRE, ELECTRIC SHOCK, OR INJURY TO PERSONS, OBSERVE THE FOLLOWING:
- ▶ Use this unit only in the manner intended by the manufacturer. If you have questions, contact the manufacturer.
  → *"Customer Service", Page 14*
- ▶ Before servicing or cleaning the unit, switch power off at service panel and lock service panel. This will prevent power from being switched on accidentally. When the service panel cannot be locked, securely fasten a prominent warning device, such as a tag to the service panel.

WARNING
To reduce the risk of fire or electric shock, do not use this appliance with any solid-state speed control device. Unattended cooking processes can cause a fire.
- ▶ This appliance is not intended for operation with an external clock timer or a remote control.

WARNING
To avoid risk of injury from a damaged appliance or power cord, observe the following.
- ▶ Never operate a damaged appliance.
- ▶ Never pull on the power cord to unplug the appliance. Always unplug the appliance at the power outlet.
- ▶ If the appliance or the power cord is damaged, immediately unplug the power cord or switch off the breaker in the circuit breaker box.
- ▶ Call Customer Service. →*Page 14*

WARNING
While cooking food items, small amounts of certain by-products, such as particulate matter / soot, can be released. To minimize exposure to these substances:
- ▶ Always ensure proper ventilation by using an appropriate ventilation fan or hood vented to the outside and/or an open window.
- ▶ Always operate the unit according to the instructions in this manual.

IMPORTANT SAFETY INSTRUCTIONS
READ AND SAVE THESE INSTRUCTIONS

WARNING
Overheated materials can cause fire or burns and may produce potentially harmful smoke or fumes.
- To prevent overheating, turn ventilation hood ON when heating grease, fats or frying using medium to high heat settings.
- Avoid heating empty pots and pans.
- Do not allow pans to boil dry.
- Do not allow aluminum foil, plastic, paper, or cloth to come in contact with a hot surface element, burner, or grate.

WARNING
To avoid risk of fire, do not leave the cooktop unattended while in use. Unattended cooking can lead to fire hazards, property damage, and injury. Always supervise cooking, especially when using high heat with oils and fats. Boilovers may cause smoking and greasy spillovers may ignite.

1.4 Child safety

This appliance is not intended for use by persons (including children) with reduced physical, sensory or mental capabilities, or lack of experience and knowledge, unless they have been given supervision or instruction concerning use of the appliance by a person responsible for their safety.
When children become old enough to use the appliance, it is the responsibility of the parents or legal guardians to ensure that they are instructed in safe practices by qualified persons.
Children should be supervised to ensure that they do not play with the appliance.

WARNING
Do not allow children to use this appliance unless closely supervised by an adult.
- Children and pets should not be left alone or unattended in the area where the appliance is in use. They should never be allowed to play in its vicinity, whether or not the appliance is in use.

Do not allow anyone to climb, stand, lean, sit, or hang on any part of an appliance.

CAUTION
Do not store items of interest to children in cabinets above an appliance or on the backguard of an appliance.
Children climbing on the appliance to reach items could be seriously injured.

WARNING
The control unit must be installed in a location where the cord cannot be easily reached by children.

WARNING
Remove all tape and packaging before using the appliance.
- Destroy the packaging after unpacking the appliance.
- Dispose of packaging in an environmentally responsible manner.
- Never allow children to play with packaging material.

1.5 Proper installation and maintenance

WARNING
In the event of a malfunction, it might become necessary to turn off the power supply.
- Have the installer show you the circuit breaker or fuse. Mark it for easy reference.

To avoid electrical shock hazard, before servicing the appliance, turn power off at the service panel and lock the panel to prevent the power from being switched on accidentally.
Proper Installation - Improper installation or grounding can cause electric shock.
- This appliance must be properly installed and grounded by a qualified technician.
- Connect only to properly grounded outlet.
- Refer to installation instructions for details.

User Servicing - Do not repair or replace any part of the appliance unless specifically recommended in this manual.
- Improper installation, service or maintenance can cause injury or property damage.
- Refer to this manual for guidance.
- All other servicing should be referred to an authorized service provider.

WARNING
Hidden surfaces may have sharp edges.
- Use caution when reaching behind or under appliance.

WARNING
If the supply cord is damaged, it must be replaced by the manufacturer, its authorized service provider or similar qualified persons in order to avoid hazard.

WARNING
Malfunctions can cause injuries.
- Do not operate this appliance if it is not working properly, or if it has been damaged. Contact an authorized service provider.

WARNING
When the hood is operated in exhaust-air mode simultaneously with a different burner which also makes use of the same chimney (such as gas, oil or coal-fired heaters, continuous-flow heaters, hot-water boilers) care must be taken to ensure that there is an adequate supply of fresh air which will be needed by the burner for combustion. Safe operation is possible provided that the under pressure in the room where the burner is installed does not exceed 4 Pa (0.04 mbar). This can be achieved if combustion air can flow through non-lockable openings, e.g. in doors, windows and via the air-intake/exhaust-air wall box or by other technical measures, such as reciprocal interlocking, etc.

CAUTION
Grease left on filters can remelt and move into the vent.

WARNING
Avoid carbon monoxide poisoning – Provide adequate air intake so combustion gases are not drawn back into the room. An air-intake/exhaust-air wall box by itself is

no guarantee that the limiting value will not be exceeded.

- Note: When assessing the overall requirement, the combined ventilation system for the entire household must be taken into consideration. This rule does not apply to the use of cooking appliances, such as cooktops and ovens.

WARNING
To reduce the risk of fire, electric shock or injury to persons, do not use replacement parts that have not been recommended by the manufacturer (e.g. parts made at home using a 3D printer).

1.6 State of California Proposition 65 Warnings

This product may contain a chemical known to the State of California, which can cause cancer or reproductive harm. Therefore, the packaging of your product may bear the following label as required by California:

STATE OF CALIFORNIA PROPOSITION 65 WARNING:

⚠ WARNING
Cancer and Reproductive Harm - **www.P65Warnings.ca.gov**

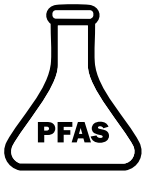

2 Preventing material damage

NOTICE
Condensation may cause corrosion damage.
- ▸ To prevent condensation from building up, switch on the appliance during cooking.

If moisture gets into the controls, this may result in damage.
- ▸ Never clean controls with a wet cloth.

Incorrect cleaning damages the surfaces.
- ▸ Follow the cleaning instructions.
- ▸ Do not use harsh or abrasive cleaning agents.
- ▸ Clean stainless steel surfaces in the grain direction only.
- ▸ Never clean controls with stainless steel cleaners.

Condensation that flows back in may damage the appliance.
- ▸ To prevent condensate from returning, fit the exhaust air pipe with a 1° gradient from the appliance.

If you put incorrect stress on the design elements, they may break off.
- ▸ Do not pull design elements.
- ▸ Do not place objects on the design elements or hang objects from them.

There is a risk of surface damage if you do not peel off the protective film.
- ▸ Remove the protective film from all parts of the appliance before using for the first time.

Painted surfaces are easily damaged.
- ▸ Follow the cleaning instructions.
  → *"Cleaning the appliance", Page 11*
- ▸ Ensure that the painted surfaces are not scratched.

3 Environmental protection and energy-saving

3.1 Disposal of packaging

The packaging materials are environmentally compatible and can be recycled.
- ▸ Sort the individual components by type and dispose of them separately.

3.2 Saving energy

If you follow these instructions, your appliance will use less power.

Adjust the fan speed to the amount of steam produced during cooking.
- ✔ The lower the fan speed, the less energy is consumed.
- ✔ Only use the intensive mode as required.

If cooking produces large amounts of steam, select a higher fan speed early.
- ✔ The odors are distributed around the room less.

Switch off the lighting if you no longer require it.
- ✔ When the lighting is switched off, it does not consume any energy.

Clean or replace the filters at the specified intervals.
- ✔ The effectiveness of the filters is retained.

Put the cooking lid on.
- ✔ The cooking vapors and condensation are reduced.

Only use the additional functions if required.
- ✔ Switching off additional functions reduces power consumption.

4 Operating modes

You can use your appliance in exhaust air mode or circulating air mode.

4.1 Exhaust-air mode

The air that is drawn in is cleaned by the grease filters and conducted to the outside via a duct system.



The air must not be discharged into a flue that is used for exhaust fumes from appliances burning gas or other fuels (not applicable for recirculation appliances).

- If the exhaust air is to be conducted into a non-functioning smoke or exhaust gas flue, you must obtain the consent of the responsible area heating inspector.
- If the exhaust air is conducted through the outer wall, a telescopic wall box should be used.

4.2 Air recirculation mode

The air which is drawn in is cleaned by the grease filters and an odor filter, and conveyed back into the room.



To bind odors in air recirculation mode, you must install an odor filter. The different options for operating the appliance in air recirculation mode can be found in our catalog. Alternatively, ask your dealer. The required accessories are available from specialist retailers, from Customer Service, or from the online shop.

→ *"Accessories", Page 13*

Note: When cooking intensively and for a long time, moisture is released into the air in the room. When using the appliance in air recirculation mode, we recommend ventilating the kitchen adequately, e.g. by briefly opening a window to remove excessive moisture.

5 Familiarizing yourself with your appliance

This Use and Care Manual covers several models. Your model may have some but not all of the features listed.

5.1 Appliance

Here you can find an overview of the parts of your appliance.

5.2 Control elements

You can use the controls to configure the settings on your appliance and obtain information about the operating status.
All function selection buttons light up when they are active.

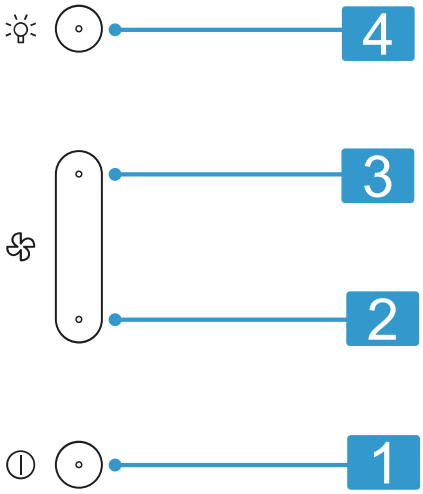

1	⏻ Switches the appliance on or off **Note:** When switched on, the appliance activates the ventilation system and the lighting.
2	Decreases the fan setting
3	Increases the fan setting
4	Switches the lighting on or off/sets the brightness

Colors

The different colors are used to guide the user in the relevant setting situations.

White	▪ Manual mode is switched on.
Orange	▪ Automatic mode is switched on.
Blue	▪ The Home Connect® connection is now set up.
Off	▪ The minimum or maximum setting has been reached. ▪ The appliance is switched off.

5.3 Fan setting

This is where you can find an overview of the settings for the fan levels.

Manual mode	Select one of the four fan settings.
Automatic mode	The optimum fan setting is set automatically using a sensor. **Notes** ▪ You can activate and deactivate automatic mode in the Home Connect® app. → *"Home Connect®", Page 10* → *"Additional functions in the Home Connect® app ", Page 10* ▪ 10 minutes after you switch on the appliance, the sensor initialization ends. After the sensor is initialized, automatic mode is ready for use.

6 Before using for the first time

Apply the initial configuration settings. Clean the appliance and the accessories.

6.1 The Home Connect® app distinguishes between gas appliances and induction appliances

▸ To make optimal use of automatic mode →*Page 10*, in the Home Connect® app, set whether you are us-

ing your appliance in combination with a gas cooktop or an induction cooktop.

Note: If both gas cooktops and induction cooktops are installed under your appliance, select the type of cooktop you use most frequently.

6.2 Setting an operating mode

Your appliance is set to air extraction mode by default.

Note: When using it in air recirculation mode, you require additional accessories.

- For instructions on switching the appliance to air exhaust air mode, see Home Connect. You can use this setting to improve the extraction performance.

7 Basic Operation

7.1 Switching the appliance on or off

Switching on the appliance

- Press ⏻.
- ✔ The glass panel is fully extended.
- ✔ The appliance is switched on, the ventilation system and the lighting switch on.

Note: After a power failure or switching on the appliance for the first time, you can initially only switch on the lighting and the ventilation system. After approx. 1 minute, the appliance initialization is complete and the remaining functions of the appliance are available.

Switching off the appliance

- Press ⏻.
- ✔ The fan run-on starts.
- ✔ The indicator lamps for operating the appliance flash orange.
- ✔ To effectively eliminate the remaining odors and condensation, the automatic fan run-on is activated as standard on the appliance. After the appliance is switched off, it continues to operate for a further 10 minutes at the lowest fan setting. In the Home Connect® app, you have the option to deactivate the automatic fan run-on and adjust the run-on time.
- ✔ The ventilation system switches off and the lighting switches off.
- ✔ The glass panel retracts.

7.2 Lighting

Switching on the lighting

The lighting can be switched on and off independently of the ventilation system.

- Press ☼.

Setting the brightness

1. Press and hold ☼ to reduce the brightness.
2. Release ☼ and press it again to reduce or increase the brightness.
3. To save the last brightness settings, switch off the lighting and switch it back on again.

Switching off the lighting

The lighting can be switched on and off independently of the ventilation system.

- Press ☼.

7.3 Selecting the fan setting

1. Press A to decrease the fan setting.
   If the minimum fan setting is set, the LED does not light up.
2. Press B to increase the fan setting.
   If the maximum fan setting is set, the LED does not light up.

Note: In manual mode, the LEDs for the fan setting light up white.
In automatic mode, the LEDs for the fan setting light up orange.

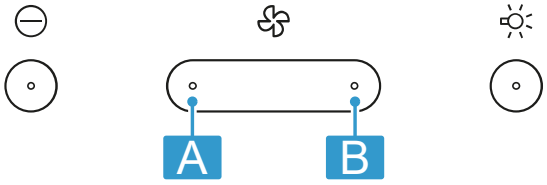

7.4 Switching on cleaning mode

Cleaning mode makes it easier to clean your appliance.

Requirement: The appliance is switched off.

- To activate cleaning mode, press and hold the symbols for reducing and increasing the fan setting for approx. 4 seconds.
- ✔ A signal tone sounds.
- ✔ The glass panel is fully extended.
- ✔ The lighting switches on.
- ✔ Cleaning mode is active.
- ✔ The indicator lamp for the lighting lights up orange.
- ✔ The indicator lamps for the fan settings light up white.
- ✔ The indicator lamps for operating the appliance flash orange.

Note: If cleaning mode is switched on, the settings for the ventilation system are not available.

7.5 Switching off cleaning mode

Cleaning mode makes it easier to clean your appliance.

- .
  → *"Switching off the appliance", Page 9*

8 Additional functions in the Home Connect® app

You can find these functions in the Home Connect® app:

8.1 Selecting manual mode or automatic mode

Automatic mode activates the ventilation system and optimally adjusts the fan performance to suit usage.

Note: In order to get the most out of automatic mode, select the type of hob with which you are cooking.

In the Home Connect® app, you can set whether manual mode or automatic mode is activated after you switch on the appliance.
In the Home Connect® app, you can select the setting to switch to automatic mode while the ventilation system is switched on.
When automatic mode is active, you can continue to adjust the fan settings using the controls.
If you switch the appliance off and back on again, automatic mode will restart.

Tip: Once the appliance has been connected to the mains or following a power failure, the sensor takes approximately 10 minutes to initialize before automatic operation becomes available.

8.2 Saturation indicator for the grease filter

In the Home Connect® app, you can see the saturation status of the grease filter and reset the saturation indicator after cleaning the grease filter.

8.3 Saturation indicator for the odor filter

In the Home Connect® app, you can view the saturation status of the odor filter and reset the saturation indicator.

Note: To achieve optimal results, select which type of odor filter you are using in the Home Connect® app.

8.4 Interval ventilation

In order to regularly ventilate your kitchen, you can use the interval ventilation. With interval ventilation, the ventilation system switches on and off in the selected setting for the selected time.

8.5 Fan run-on

The fan run-on removes remaining odors and is used to dry the filter after the cooking process.

9 Home Connect®

This appliance is network-capable. Connecting your appliance to a mobile device lets you control its functions via the Home Connect® app, adjust its basic settings and monitor its operating status.
The Home Connect® services are not available in every country. The availability of the Home Connect® function depends on the availability of the Home Connect® services in your country. You can find information on this at: *www.home-connect.com*.
The Home Connect® app guides you through the entire registration process. Follow the instructions, noting the information in the Home Connect® app.

Notes

- Note the safety information in this instruction manual and ensure that it is also observed when operating the appliance using the Home Connect® app.
- Operating the appliance on the appliance itself always takes priority. It is not possible to operate the appliance using the Home Connect® app during this time.
- In networked standby mode, the appliance requires a maximum of 2 watts.

9.1 Setting up the Home Connect® app

1. Install the Home Connect® app on your mobile device.
2. Start the Home Connect® app and set up access for Home Connect®.
   The Home Connect® app guides you through the entire registration process.

9.2 Setting up Home Connect®

Requirements

- The appliance is connected to the power supply and is switched on.
- You have a mobile device with a current version of the iOS or Android operating system, e.g. a smartphone.
- The mobile device is in the vicinity of the appliance.
- The mobile device and the appliance are within range of your home network's Wi-Fi signal.

1. Scan the following QR code.

   You can install the Home Connect® app and connect your appliance via the QR code.
2. Follow the instructions in the Home Connect® app.

9.3 Resetting the connection

Requirement: The appliance is switched off.

1. Open connection mode.
   ▸ Press and hold ⏻ and 🔆 until the indicator lamp for the lighting lights up blue.

2. To reset the saved connections to the Wi-Fi and to Home Connect®, press and hold .
✔ A signal tone sounds.
✔ The LED flashes orange.

9.4 Software update

Your appliance's software can be updated using the software update function, e.g. for the purposes of optimization, troubleshooting or security updates.
To do this, you must be a registered Home Connect® user, have installed the app on your mobile device and be connected to the Home Connect® server. As soon as a software update is available, you will be informed via the Home Connect® app and will be able to start the software update via the app. Once the update has been successfully downloaded, you can start installing it via the Home Connect® app if you are in your home network (Wi-Fi). The Home Connect® app informs you once the installation is successful.
You can find the current software version in the Home Connect® app under the appliance information for the appliance.

Notes
- The software update consists of two steps.
  – The first step is download.
  – The second step is installation on your appliance.
- You can continue to use your appliance while updates are downloading. Depending on your personal settings in the app, software updates can also be set to download automatically.
- Installation takes a few minutes. You cannot use your appliance during installation.
- We recommend that you install security updates as soon as possible.

9.5 Remote diagnostics

Customer Service can access your appliance via Remote Diagnostics if you ask them to do so, if your appliance is connected to the Home Connect® server and if Remote Diagnostics is available in the country where you are using the appliance.

Tip: Further information and details about the availability of Remote Diagnostics in your country can be found in the Service/Support section of your local website: *www.home-connect.com*.

9.6 Data Protection

Please read this information on data protection.

The first time your appliance is registered on a home network connected to the Internet, your appliance transmits the following types of data to the Home Connect® server (initial registration):
- Unique appliance identification (consisting of appliance codes as well as the MAC address of the installed Wi-Fi communication module).
- Security certificate of the Wi-Fi communication module (to ensure a secure data connection).
- The current software and hardware version of your home appliance.
- Status of any previous reset to factory settings.

This initial registration prepares the Home Connect® functions for use and is only required when you want to use the Home Connect® functions for the first time.

Note: Please note that the Home Connect® functions can only be used in conjunction with the Home Connect® app. Information on data protection can be retrieved in the Home Connect® app.

10 Cleaning and maintenance

Note: The Statement of Limited Product Warranty covers defects in materials and workmanship. Cleaning and maintenance is not covered by the warranty and a charge will apply. See the Statement of Limited Product Warranty for more details.

10.1 Cleaning agents

You can obtain suitable cleaning products from Customer Service or the online shop.

NOTICE
Unsuitable cleaning agents may damage the surfaces of the appliance.
- ▸ Do not use strong or abrasive cleaning agents.
- ▸ Do not use cleaning agents with a high alcohol content.
- ▸ Do not use hard scouring pads or cleaning sponges.
- ▸ Only use glass cleaners, glass scrapers or stainless steel care products if recommended in the cleaning instructions for the relevant part.
- ▸ Wash sponge cloths thoroughly before use.

10.2 Cleaning the appliance

Clean the appliance as specified. This will ensure that the different parts and surfaces of the appliance are not damaged by incorrect cleaning or unsuitable cleaning products.

⚠ WARNING
Highly caustic alkaline or highly acidic cleaning agents in conjunction with aluminum parts in the interior of the appliance may cause explosions.
- ▸ Never use highly caustic alkaline or highly acidic cleaning agents. In particular, do not use commercial or industrial cleaning agents in conjunction with aluminum parts, e.g. grease filter on extractor hoods.

⚠ WARNING
Moisture entering the appliance may cause electrical shock.
- ▸ Before cleaning, pull out the power plug or switch off the circuit breaker in the circuit breaker box.
- ▸ Do not use any steam cleaners or high-pressure cleaners to clean the appliance.
- ▸ Do not use the appliance with damp hands.

⚠ WARNING
The appliance becomes hot during operation.
- ▸ Allow the appliance to cool down before cleaning.

⚠ WARNING
Components inside the appliance may have sharp edges.
▸ Clean the appliance interior carefully.

⚠ WARNING
With motorized telescopic appliances, there is a risk of crushing between the glass panel and the corresponding opening.
▸ Do not reach for the glass panel whilst it is moving.
▸ Do not clean the appliance or replace the filter until the glass panel has stopped moving.

1. Observe the information regarding the cleaning agents.
2. Clean as follows, depending on the surface:
   ▸ Clean stainless steel surfaces in the direction of the finish using a sponge cloth and hot soapy water.
   ▸ Clean painted surfaces using a damp sponge cloth and hot soapy water.
   ▸ Clean aluminum using a soft cloth and glass cleaner.
   ▸ Clean plastic using a soft cloth and glass cleaner.
   ▸ Clean glass using a soft cloth and glass cleaner.
3. Dry with a soft cloth.
4. Apply a thin layer of the stainless steel cleaning product to stainless steel surfaces using a soft cloth.
   You can obtain stainless steel cleaning products from customer service or the online shop.

10.3 Cleaning the controls

⚠ WARNING
An ingress of moisture may cause an electric shock.
▸ Do not use wet sponge cloths.

1. Observe the information regarding the cleaning agents.
2. Clean using a damp sponge cloth and hot soapy water.
3. Dry with a soft cloth.

10.4 Grease filter

Removing the grease filter

1. Ensure that the glass panel is fully extended.
2. **NOTICE:** Falling grease filters may damage the cooktop below. Grease filters may become damaged if they fall.
   ▸ Grip below the grease filter with one hand.

   Open the locks on the grease filters.

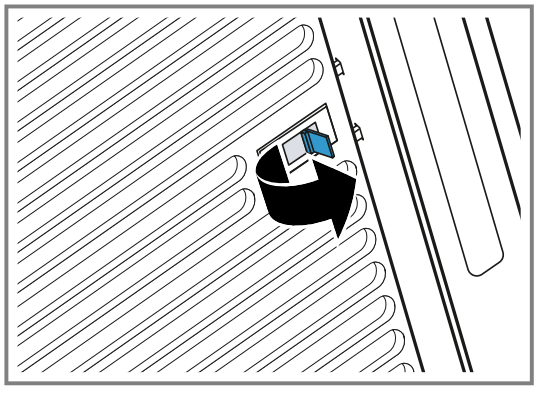

3. Remove the grease filters from the holders.
   To prevent grease or condensation from dripping, hold the grease filters level.

Cleaning the grease filters manually

The grease filters filter the grease from the cooking vapors. Regularly cleaned grease filters help ensure a high level of grease separation. We recommend cleaning the grease filters every 2 months.

⚠ WARNING
Fatty deposits in the grease filters may catch fire.
▸ Clean the grease filters regularly.

Requirement: The grease filters have been removed.

→ *"Removing the grease filter", Page 12*

1. Observe the information regarding the cleaning agents.
2. Soak the grease filter in hot soapy water.
   Use special degreaser solvent for stubborn dirt. You can purchase degreaser from Customer Service or the online shop.
3. Use a brush to clean the grease filters.
4. Rinse the grease filters thoroughly.
5. Allow the grease filters to drain.

Cleaning the grease filters in the dishwasher

The grease filters filter the grease from the cooking vapors. Regularly cleaned grease filters help ensure a high level of grease separation. We recommend cleaning the grease filters every 2 months.

⚠ WARNING
Fatty deposits in the grease filters may catch fire.
▸ Clean the grease filters regularly.

NOTICE
The grease filters may become damaged if they are squeezed in the dishwasher.
▸ Do not squeeze the grease filters.

Note: When cleaning the grease filter in the dishwasher, light discoloration may occur. This discoloration has no effect on the performance of the metal grease filters.

Requirement: The grease filters have been removed.

→ *"Removing the grease filter", Page 12*

1. Observe the information regarding the cleaning agents.
2. Place the grease filters loosely into the dishwasher.
   Do not clean heavily soiled grease filters with cookware.
   Use special degreaser solvent for stubborn dirt. You can purchase degreaser from Customer Service or the online shop.
3. Start the dishwasher.
   Select a temperature of no more than 160 °F (70 °C.)
4. Allow the grease filters to drain.

Fitting the grease filter

NOTICE
Falling grease filters may damage the cooktop below.
▸ Grip below the grease filter with one hand.

1. Ensure that the glass panel is fully extended.
2. Insert the grease filter on the lower edge.①

3. Fold the grease filter upwards and engage the locks. ②

4. Ensure that the grease filters are inserted correctly.

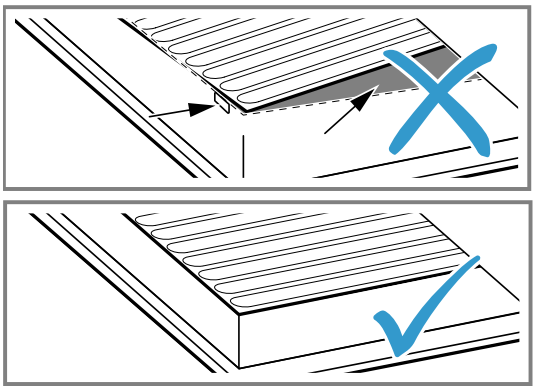

5. Ensure that the locks engage.

11 Troubleshooting

You can eliminate minor issues on your appliance yourself. Please read the information on eliminating issues before contacting Customer Service. This may avoid unnecessary repair visits.

⚠ WARNING

To avoid risk of injury from improper repairs, observe the following.

- Only qualified technicians or authorized service providers should perform repairs.
- If the power cord or the appliance power cable of this appliance becomes damaged, it must be replaced with a special power cord or special appliance power cable, which is available from the manufacturer or the manufacturer's Customer Service.
- If the power cord of this appliance is damaged, it must be replaced by trained, specialist personnel.
- Only genuine spare parts may be used to repair the appliance.
- If the appliance has an issue, call Customer Service.

11.1 Malfunctions

Fault	Cause and troubleshooting
The appliance is not working.	The plug for the power cord is not plugged in. ▸ Connect the appliance to the power supply.
	The circuit breaker in the circuit breaker panel has tripped. ▸ Check the breaker panel.
	There has been a power failure. ▸ Check whether the lighting in your kitchen or other appliances in the room are working.
The LED lighting does not work.	Various causes are possible. ▸ Defective LED lights may be replaced by the manufacturer, their Customer Service or a qualified technician (electrician) only. ▸ Call customer service →*Page 14*.
Home Connect® is not working properly.	Various causes are possible. ▸ Go to *www.home-connect.com*.
The cooktop-based hood control is not working properly.	It may be necessary to change the settings. ▸ Read the information for use for the cooktop. ▸ Go to *www.home-connect.com*.

12 Accessories

Accessories are available from Customer Service, specialist retailers or online. You should only use original accessories as they are specially designed for your appliance.

Accessories are appliance-specific. When purchasing, always check for compatibility with your appliance model number (E no.).

You can find out which accessory is available for your appliance in our catalog, the online shop or the Customer Service.
www.gaggenau.com

Accessories	Order number
Lowering frame, 24" (60 cm)	AA210460
Lowering frame, 36" (90 cm)	AA210492
Installation kit, 36" (90 cm), upper cabinet	AA210491

13 Disposal

13.1 Disposal of your old appliance

Environmentally compatible disposal allows valuable raw materials to be recycled.

1. Unplug the appliance from the power supply.
2. Cut through the power cord.
3. Dispose of the appliance in an environmentally responsible manner.
   Information about current disposal methods can be obtained from your specialist dealer or local authority.

14 Customer Service

With any warranty repair, we will make sure your appliance is repaired by an authorized service provider using genuine replacement parts. We use only genuine replacement parts for all repairs.
You can obtain function-relevant and storable genuine spare parts from our Customer Service for up to 15 years from the date on which your appliance was placed on the market.
For more information, please contact our Customer Service team.
Detailed information on the warranty period and terms of warranty can be found in the Statement of Limited Product Warranty, from your retailer, or on our website.
The LED light sources are available as a spare part and should only be replaced by an authorized service provider.
USA:
1-877-442-4436
www.gaggenau.com
www.gaggenau.com/us/appliances/eshop
CA:
1-877-442-4436
www.gaggenau.com
www.gaggenau.ca
For assistance with connecting to Home Connect®, you can also view instructions here:
www.home-connect.com/us/en/help-support/set-up

14.1 Model number (E-Nr.), production number (FD) and consecutive numbering (Z-Nr.)

If you contact Customer Service, you will need the product number (E-Nr.), production number (FD), and consecutive numbering (Z-Nr.), which you can find on the appliance's rating label.
Making a note of your appliance's details and the Customer Service telephone number will enable you to find them again quickly.

14.2 Rating plate location

You can find the rating plate of your appliance:
- Inside the appliance (remove grease filters for access).

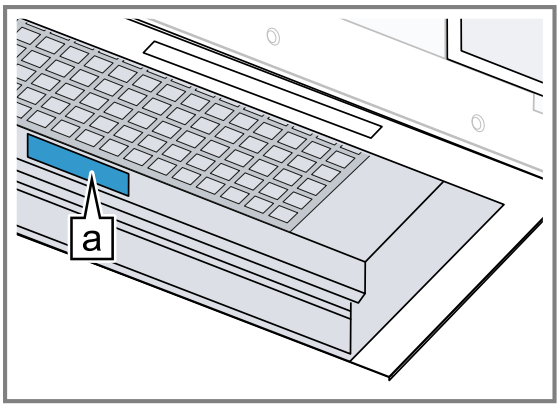

a	Rating plate

15 STATEMENT OF LIMITED PRODUCT WARRANTY

15.1 What this warranty covers & Who it applies to

The limited warranty provided by BSH Home Appliances (“Gaggenau“) in this Statement of Limited Product Warranty applies only to the Gaggenau appliance sold to you (“Product“), provided that the Product was purchased on or after January 1, 2025:

- For your normal, household (non-commercial) use, and has in fact at all times only been used for normal household purposes.
- New at retail from a BSH authorized dealer or directly from BSH (not a display, "as is", or previously returned model), and not for resale, or commercial use.
- Within the United States or Canada, and has at all times remained within the country of original purchase.

The warranties stated herein apply to the original purchaser of the product warranted herein and to each succeeding owner of the product purchased for ordinary home use during the term of the warranty.
Please make sure to register your Product; while not necessary to effectuate warranty coverage, it is the best way for Gaggenau to notify you in the unlikely event of a safety notice or product recall.

15.2 How long the warranty lasts

Gaggenau warrants that the Product is free from defects in materials and workmanship for a period of five (5) years from the date of the original delivery. The warranty shall only be extended for the time that elapsed between the date of your warranty claim and the date of the completed repair or replacement. This Product is also warranted to be free from **cosmetic** defects in material and workmanship (such as scratches of stainless steel, paint/porcelain blemishes, chips, dents, or other damage to the finish) of the Product, for a period of sixty (60) days from the date of delivery or closing date for new construction. This **cosmetic** warranty excludes slight color variations due to inherent differences in painted and porcelain parts, as well as differences caused by kitchen lighting, product location, or other similar factors. This **cosmetic** warranty specifically excludes any display, floor, “As Is”, or “B” stock appliances.

15.3 Repair/replace as your exclusive remedy

During this warranty period, Gaggenau or one of its authorized service providers will repair your Product without charge to you (subject to certain limitations stated herein) if your Product proves to have been manufactured with a defect in materials or workmanship. If reasonable attempts to repair the Product have been made without success, then Gaggenau will replace your Product (upgraded models may be available to you, in Gaggenau's sole discretion, for an additional charge). Nothing in this warranty requires damaged or defective parts to be replaced with parts of a different type or design than the original parts. All removed parts and components shall become the property of Gaggenau at its sole option. All replaced and/or repaired parts shall assume the identity of the original part for purposes of this warranty and this warranty shall not be extended with respect to such parts. Gaggenau's sole liability and responsibility hereunder is to repair manufacturer-defective Product only, using a Gaggenau authorized service provider during normal business hours. For safety and property damage concerns, Gaggenau highly recommends that you do not attempt to repair the Product yourself, or use a non-authorized service provider; Gaggenau will have no responsibility or liability for damage resulting from repairs or work performed by a non-authorized service provider. Authorized service providers are those persons or companies that have been specially trained on Gaggenau products, and who possess, in Gaggenau's opinion, a superior reputation for customer service and technical ability (note that they are independent entities and are not agents, partners, affiliates or representatives of Gaggenau). Nevertheless, taking your product to be serviced by a repair shop that is not affiliated with or an authorized dealer of Gaggenau will not void this warranty. Also, using third-party parts will not void this warranty. Notwithstanding the foregoing, Gaggenau will not incur any liability, or have responsibility, for the Product if it is located in a remote area (more than 100 miles from an authorized service provider) or is reasonably inaccessible, hazardous, threatening, or treacherous locale, surroundings, or environment; in any such event, if you request, Gaggenau would still pay for labor and parts and ship the parts to the nearest authorized service provider, but you would still be fully liable and responsible for any travel time or other special charges by the service company, assuming they agree to make the service call. Further, to the extent you have installed the Product in a difficult-to-access location or have otherwise installed temporary or permanent fixtures that create barriers to accessing or removing the Product, Gaggenau will not incur any liability for, or have responsibility, for work or costs associated with moving the Product or otherwise creating access to the Product in order to repair or replace it. All such costs shall be your sole responsibility.

15.4 Out of warranty product

Gaggenau is under no obligation, at law or otherwise, to provide you with any concessions, including repairs, prorates, or Product replacement, once this warranty has expired.

15.5 Warranty exclusions

The warranty coverage described herein excludes all defects or damage that are not the direct fault of Gaggenau, including without limitation, one or more of the following:

- Use of the Product in anything other than its normal, customary and intended manner (including without limitation, any form of commercial use, use or storage of an indoor product outdoors, use of the Product in conjunction with air or water-going vessels).
- Any party's willful misconduct, negligence, misuse, abuse, accidents, neglect, improper operation, failure to maintain, improper or negligent installation, tampering, failure to follow operating instructions, mishandling, unauthorized service (including selfperformed "fixing" or exploration of the appliance's internal workings).
- Adjustment, alteration or modification of any kind.
- A failure to comply with any applicable state, local, city, or county electrical, plumbing and/or building codes, regulations, or laws, including failure to install the product in strict conformity with local fire and building codes and regulations.

- Ordinary wear and tear, spills of food, liquid, grease accumulations, or other substances that accumulate on, in, or around the Product.
- Any external, elemental and/or environmental forces and factors, including without limitation, rain, wind, sand, floods, fires, mud slides, freezing temperatures, excessive moisture or extended exposure to humidity, lightning, power surges, structural failures surrounding the appliance, and acts of God.
- Service calls to correct the installation of your Product, to instruct you how to use your Product, to replace house fuses or correct house wiring or plumbing.
- Removal and replacement of trim or decorative panels that interfere with servicing the Product.
- Damage or defects caused by labor or parts installed by any non-authorized service provider, unless approved by Gaggenau before service is performed.

In no event shall Gaggenau have any liability or responsibility whatsoever for damage to surrounding property, including cabinetry, floors, ceilings, and other structures or objects around the Product. Also excluded from this warranty are Products, on which the serial numbers have been altered, defaced, or removed; service visits to teach you how to use the Product, or visits where there is nothing wrong with the Product; correction of installation problems (you are solely responsible for any structure and setting for the Product, including all electrical, plumbing or other connecting facilities, for proper foundation/flooring, and for any alterations including without limitation cabinetry, walls, floors, shelving, etc.); and resetting of breakers or fuses.
TO THE EXTENT ALLOWED BY LAW, THIS WARRANTY SETS OUT YOUR EXCLUSIVE REMEDIES WITH RESPECT TO PRODUCT, WHETHER THE CLAIM ARISES IN CONTRACT OR TORT (INCLUDING STRICT LIABILITY, OR NEGLIGENCE) OR OTHERWISE. THIS WARRANTY IS IN LIEU OF ALL OTHER WARRANTIES, WHETHER EXPRESS OR IMPLIED. ANY WARRANTY IMPLIED BY LAW, WHETHER FOR MERCHANTABILITY OR FITNESS FOR A PARTICULAR PURPOSE, OR OTHERWISE, SHALL BE EFFECTIVE ONLY FOR THE PERIOD THAT THIS EXPRESS LIMITED WARRANTY IS EFFECTIVE. IN NO EVENT WILL THE MANUFACTURER BE LIABLE FOR CONSEQUENTIAL, SPECIAL, INCIDENTAL, INDIRECT, "BUSINESS LOSS", AND/OR PUNITIVE DAMAGES, LOSSES, OR EXPENSES, INCLUDING WITHOUT LIMITATION TIME AWAY FROM WORK, HOTELS AND/OR RESTAURANT MEALS, REMODELLING EXPENSES IN EXCESS OF DIRECT DAMAGES WHICH ARE DEFINITIVELY CAUSED EXCLUSIVELY BY GAGGENAU, OR OTHERWISE. SOME STATES DO NOT ALLOW THE EXCLUSION OR LIMITATION OF INCIDENTAL OR CONSEQUENTIAL DAMAGES, AND SOME STATES DO NOT ALLOW LIMITATIONS ON HOW LONG AN IMPLIED WARRANTY LASTS, SO THE ABOVE EXCLUSIONS OR LIMITATIONS MAY NOT APPLY TO YOU. THIS WARRANTY GIVES YOU SPECIFIC LEGAL RIGHTS, AND YOU MAY ALSO HAVE OTHER RIGHTS WHICH VARY FROM STATE TO STATE.
No attempt to alter, modify or amend this warranty shall be effective unless authorized in writing by an officer of BSH.

15.6 Obtaining warranty service

To obtain warranty service for your product, you should contact Gaggenau Customer Support at 1-877-442-4436 to schedule a repair.

15.7 Product information

For handy reference, copy the information below from the rating plate. Keep your invoice and/or delivery documents for warranty validation.

Model number (E-Nr.)
Production number (FD)
Date of delivery

Recursos y ayuda en línea en español

Muchos manuales están disponibles en línea en inglés, francés y español.
Para acceder a manuales de modelos específicos y otros documentos en español:

- Visite *www.gaggenau.com/us/for-owners/use-and-care-manuals* o escanee el código QR.
- Introduzca el número de producto (E-Nr.) que encontrará en la placa de características del aparato.
- Seleccione o descargue el manual o documento que desee.

The difference is Gaggenau

gaggenau.com

BSH Home Appliances Corporation
1901 Main Street, Suite 600
Irvine, CA 92614
USA
www.gaggenau.com
1-877-442-4436
© 2026 BSH Home Appliances Corporation

9002000579 (060903)
en-us