BOSCH

Register your new appliance now at MyBosch and enjoy benefits free of charge: **bosch-home.com/welcome**

MyBosch

Dishwasher

SMS2ITW67G

[en] Information for Use

You can find additional information and explanations online. Scan the QR code on the title page.

Table of contents

1 Safety 4
1.1 Definition of the signal words 4
1.2 General information 4
1.3 Intended use 4
1.4 Restriction on user group 4
1.5 Safe installation 5
1.6 Safe use 6
1.7 Damaged appliance 7
1.8 Risk to children 8

2 Preventing material damage 9
2.1 Safe installation 9
2.2 Safe use 10

3 Environmental protection and saving energy 10
3.1 Disposing of packaging 10
3.2 Saving energy 10

4 Installation and connection 10
4.1 Scope of supply 10
4.2 Installing and connecting the appliance 11
4.3 Drainage connection 11
4.4 Drinking water connection 11
4.5 Electrical connection 11

5 Familiarising yourself with your appliance 12
5.1 Appliance 12
5.2 Controls 13

6 Programmes 15
6.1 Information for test institutes .. 16
6.2 Favourite ☆ 16

7 Additional functions 17

8 Features 17
8.1 Top basket 18
8.2 Etagere 18
8.3 Bottom basket 19
8.4 Folding prongs 19
8.5 Cutlery basket 20
8.6 Basket heights 20

9 Before using for the first time .. 20
9.1 Performing the initial configuration 20

10 Water softening system 20
10.1 Overview of water hardness settings 21
10.2 Setting the water softening system 21
10.3 Special salt 21
10.4 Switching off the water softening system 22
10.5 Regeneration of the water softening system 22

11 Rinse aid system 23
11.1 Rinse aid 23
11.2 Setting the amount of rinse aid 23
11.3 Switching the rinse aid system off 24

12 Detergent 24
12.1 Suitable detergents 24
12.2 Unsuitable detergents 25
12.3 Information on detergents 25
12.4 Adding detergent 26

13 Tableware 26
13.1 Damage to glass and tableware 27
13.2 Arrange tableware 27
13.3 Removing tableware 28

14 Basic operation 29
14.1 Switching on the appliance .. 29
14.2 Setting a programme 29
14.3 Setting additional functions .. 29
14.4 Setting timer programming ... 29

14.5 Starting the programme 29
14.6 Activating button lock 30
14.7 Deactivate button lock 30
14.8 Interrupting programme 30
14.9 Terminate programme 30
14.10 Switching off appliance 30

15 Basic settings 30
15.1 Overview of the basic settings 30
15.2 Changing basic settings 32

16 Home Connect 32
16.1 Setting up Home Connect 32
16.2 Remote Start Remote Start 33
16.3 Smart Start [1] 33
16.4 Data protection 33

17 Cleaning and servicing 34
17.1 Cleaning the tub 34
17.2 Cleaning products 34
17.3 Tips on appliance care 34
17.4 Machine Care Machine Care 34
17.5 Filter system 35
17.6 Cleaning spray arms 36

18 Troubleshooting 37
18.1 Clean wastewater pump 43

19 Transportation, storage and disposal 43
19.1 Removing the appliance 43
19.2 Protect appliance from frost 44
19.3 Transporting the appliance ... 44
19.4 Disposing of old appliance ... 44

20 Customer Service 44
20.1 Product number (E-Nr.), production number (FD) and consecutive numbering (Z-Nr.) 45

21 Technical specifications 45
21.1 Information regarding Free and Open Source Software .. 45

22 Declaration of Conformity 46
22.1 Statement of Compliance for Great Britain 47

[1] Depending on the appliance specifications

1 Safety

Observe the following safety instructions.

1.1 Definition of the signal words

This is where you can find explanations for the safety signal words used in this manual.

⚠ WARNING
This indicates that death or serious injuries may occur as a result of non-observance of this warning.

ATTENTION
This indicates that damage to the appliance or other material damage may occur as a result of non-compliance with this warning.

Note: This alerts you to important information.

1.2 General information

- Read this instruction manual carefully.
- Keep the instruction manual and the product information safe for future reference or for the next owner.
- Do not connect the appliance if it has been damaged in transit.

1.3 Intended use

Only use this appliance:
- For cleaning household tableware.
- in closed rooms in the home and with similar applications, e.g.: in canteens in shops, offices and other work environments; in agricultural businesses; use by customers in hotels, motels and other typical home environments; in bed and breakfasts.
- Up to an altitude of 4000 m above sea level.

1.4 Restriction on user group

This appliance may be used by children aged 8 or over and by people who have reduced physical, sensory or mental abilities or inadequate experience and/or knowledge, provided that they are

supervised or have been instructed on how to use the appliance safely and have understood the resulting dangers.
Do not let children play with the appliance.
Cleaning and user maintenance must not be performed by children unless they are being supervised.
Keep children under the age of 8 years away from the appliance and power cable.

1.5 Safe installation

⚠ WARNING – Risk of injury!
Improper installation may cause injury.
- When installing and connecting the appliance, follow the instructions in the manual and installation instructions.

⚠ WARNING – Risk of electric shock!
Incorrect installation is dangerous.
- Connect and operate the appliance only in accordance with the specifications on the rating plate.
- Always use the supplied power cable for the new appliance.
- Connect the appliance to a power supply with alternating current only via a properly installed socket with earthing.
- The protective conductor system of the domestic electrical installation must be properly installed.
- Never equip the appliance with an external switching device, e.g. a timer or remote control.
- When the appliance is installed, the mains plug of the power cord must be freely accessible. If free access is not possible, an isolating switch must be integrated into the permanent electrical installation according to the installation regulations.
- When installing the appliance, check that the power cable is not trapped or damaged.

⚠ WARNING – Risk of fire!
It is dangerous to use an extended power cord and non-approved adapters.
- Do not use extension cables or multiple socket strips.
- Only use adapters and power cords approved by the manufacturer.

- If the power cord is too short and a longer one is not available, please contact an electrician to have the domestic installation adapted.

Contact between the appliance and installation lines may lead to a defect in these lines, e.g. gas pipes and power lines. Gas from a corroded gas pipe can ignite. A damaged power line can cause a short circuit.

- Check that there is a distance of at least 5 cm between the appliance and installation lines.

⚠ WARNING – Risk of burns!

If the appliance is not installed properly, this may result in burns.

- With free-standing appliances, ensure that they are installed with the back panel against a wall.

1.6 Safe use

⚠ WARNING – Risk of serious harm to health!

Failure to comply with safety instructions and directions for use on packagings of detergent and rinse aid products may cause serious harm to health.

- Follow the safety instructions and directions for use on the packagings of detergent and rinse aid products.

⚠ WARNING – Risk of explosion!

Adding solvents to the interior of the appliance may cause explosions.

- Never add solvents to the interior of the appliance.

Highly caustic alkaline or highly acidic cleaning agents in conjunction with aluminium parts in the interior of the appliance may cause explosions.

- Never use highly caustic alkaline or highly acidic cleaning agents, in particular commercial or industrial products, in conjunction with aluminium parts (e.g. grease filters of extractor hoods or aluminium pans), e.g. for the Machine Care programme.

⚠ WARNING – Risk of injury!

Leaving the appliance door open may result in injury.

- Only open the appliance door to load or unload tableware in order to prevent accidents, e.g. through tripping.

- Do not sit or stand on the appliance door when open.

Knives and utensils with sharp points can cause injuries.

- Arrange knives and utensils with sharp points in the cutlery basket with the points downwards, on the knife shelf or in the cutlery drawer.

⚠ WARNING – Risk of scalding!

If you open the appliance door while the programme is running, hot water may splash out of the appliance.

- Open the appliance door carefully if the programme is still running.

⚠ WARNING – Risk of tipping!

Overfilling the Baskets may cause the appliance to tip up.

- Never overfill the Baskets with free-standing appliances.

⚠ WARNING – Risk of electric shock!

An ingress of moisture can cause an electric shock.

- Only use the appliance in enclosed spaces.
- Never expose the appliance to intense heat or humidity.
- Do not use steam- or high-pressure cleaners to clean the appliance.

If the insulation of the power cord is damaged, this is dangerous.

- Never let the power cord come into contact with hot appliance parts or heat sources.
- Never let the power cord come into contact with sharp points or edges.
- Never kink, crush or modify the power cord.

1.7 Damaged appliance

⚠ WARNING – Risk of electric shock!

If the appliance or the power cord is damaged, this is dangerous.

- Never operate a damaged appliance.
- Never operate an appliance with a cracked or fractured surface.
- Never pull on the power cord to unplug the appliance. Always unplug the appliance at the mains.
- If the appliance or the power cord is damaged, immediately unplug the power cord or switch off the fuse in the fuse box and turn off the water tap.
- Call customer service. →*Page 44*

Improper repairs are dangerous.
- Repairs to the appliance should only be carried out by trained specialist staff.
- Only use genuine spare parts when repairing the appliance.
- If the power cord or the appliance power cable of this appliance is damaged, it must be replaced with a special power cord or special appliance power cable, which is available from the manufacturer or its Customer Service.

1.8 Risk to children

⚠ WARNING – Risk of suffocation!
Children may put packaging material over their heads or wrap themselves up in it and suffocate.
- Keep packaging material away from children.
- Do not let children play with packaging material.

Children may breathe in or swallow small parts, causing them to suffocate.
- Keep small parts away from children.
- Do not let children play with small parts.

Children may become trapped in the appliance and suffocate.
- Never let children play with or operate the appliance.

⚠ WARNING – Risk of harm to health!
Children can lock themselves in the appliance, thereby putting their lives at risk.
- With redundant appliances, unplug the power cord. Then cut through the cord and damage the lock on the appliance door beyond repair so that the appliance door will no longer close.

⚠ WARNING – Risk of crushing!
With higher-level appliances, children can become crushed between the appliance door and cabinet doors underneath.
- Keep an eye on children when opening and closing the appliance door.

⚠ WARNING – Risk of chemical burns!
Rinse aid and detergent may cause chemical burns to the mouth, throat and eyes.
- Keep children away from detergent and rinse aid products.

- Keep children away from the appliance when open. The water in the interior of the dishwasher is not drinking water. It may contain residues of detergents and rinse aid.

⚠ **WARNING – Risk of injury!**
Children may get their fingers caught in the slots of the tablet collecting tray and injure themselves.
- Keep children away from the appliance when open.

2 Preventing material damage

2.1 Safe installation

ATTENTION
Improper installation of the appliance may cause damage.
- If the dishwasher is installed above or below other domestic appliances, follow the information on installation in combination with a dishwasher in the installation instructions for the individual appliances.
- If there is no information or if the installation instructions do not include the relevant information, contact the manufacturer of these appliances to check that the dishwasher can be installed above or below these appliances.
- If no information is available from the manufacturer, the dishwasher should not be installed above or below such appliances.
- To ensure the safe operation of all domestic appliances, continue following the installation instructions for the dishwasher.
- Do not install the dishwasher under a hob.
- Do not install the dishwasher near heat sources, e.g. radiators, heat storage tanks, ovens or other appliances that generate heat.

Contact between the appliance and water pipes may lead to corrosion of these pipes, possibly causing them to leak.
- Check that there is a distance of at least 5 cm between the appliance and the water pipe. The pipes supplied for the drinking water and waste water connections are not affected here.

Modified or damaged water hoses may result in material damage and damage to the appliance.
- Never kink, crush, modify or cut through water hoses.
- Only use the water hoses supplied with the appliance or genuine spare hoses.
- Never re-use water hoses that have been used before.

If the water pressure is too high or too low, the appliance may not be able to operate properly.
- Make sure that the water pressure in the water supply system is min. 50 kPa (0.5 bar) and max. 1000 kPa (10 bar).
- If the water pressure exceeds the maximum value specified, a pressure-reducing valve must be installed between the drinking water connection and the hose set of the appliance.

2.2 Safe use

ATTENTION
Escaping water vapour can damage fitted units.
- When the programme ends, leave the appliance to cool down for a while before opening the door.

Special salt for dishwashers can damage the tub due to corrosion.
- To make sure that any special salt that escapes is washed out of the tub, add the special salt to the dispenser for special salt immediately before the programme starts.

Detergent may damage the water softening system.
- Only fill the dispenser of the water softening system with special dishwasher salt.

Unsuitable cleaning agents may damage the appliance.
- Do not use a steam cleaner.
- So as not to scratch the finish on the appliance, do not use sponges with a rough surface or abrasive cleaning agents.
- To prevent corrosion, do not use sponge cloths on dishwashers with a stainless steel front or rinse such cloths thoroughly several times before using them for the first time.

3 Environmental protection and saving energy

3.1 Disposing of packaging

The packaging materials are environmentally compatible and can be recycled.
- Sort the individual components by type and dispose of them separately.

3.2 Saving energy

If you follow these instructions, your appliance will use less electricity and less water.

Use the Eco 50° programme.
✔ The Eco 50° programme is energy-efficient and environmentally friendly.
→ *"Programmes", Page 15*

4 Installation and connection

To ensure proper operation, connect the appliance to the power and water supply correctly. Observe the specified criteria and the installation instructions.

4.1 Scope of supply

After unpacking all parts, check for any damage in transit and completeness of the delivery.
If you have any complaints, contact the dealer who sold you the appliance or our Customer Service.

Note: The appliance has been tested at the factory to check it is in working order. It is possible that water has left marks on the appliance. These marks will disappear after the first wash cycle.

The delivery consists of the following:
- Dishwasher
- Operating instructions
- Installation Instructions
- Further information documents
- Installation material
- Inlet hose
- Mains cable
- Quick reference guide

4.2 Installing and connecting the appliance

You can position your built-under or integrable appliance in a fitted kitchen between wooden and plastic walls.

1. Follow the safety instructions. →*Page 4*
2. Follow the instructions for electrical connection.
3. Check the Scope of supply and the condition of the appliance.
4. Consult the installation instructions for the installation dimensions required.
5. Make the appliance level using the height-adjustable feet.
   Make sure that the appliance is standing on the floor securely.
6. Install the drainage connection. →*Page 11*
7. Install the drinking water connection. →*Page 11*
8. Connect the appliance to the power supply.

4.3 Drainage connection

Connect your appliance to drainage connection so dirty water is discharged via the wash cycle.

Installing the drainage connection

1. Consult the installation instructions supplied for the steps required here.
2. Connect the wastewater hose to the outlet connection of the siphon using the enclosed parts.
3. When doing so, check that the wastewater hose is not kinked, crushed or twisted.
4. Also check that there is no cover in the drainage system preventing the wastewater from being discharged.

4.4 Drinking water connection

Connect your appliance to a drinking water connection.

Installing the drinking water connection

Note: If you are replacing the appliance, you must use a new water supply hose.

1. Consult the installation instructions supplied for the steps required here.
2. Connect the appliance to the drinking water connection using the enclosed parts.
   Observe the Technical data.
3. When doing so, check that the drinking water connection is not kinked, crushed or twisted.

4.5 Electrical connection

Connecting the appliance to the electricity supply

Notes

- Follow the Safety instructions →*Page 5*.
- Please note that the water safety system is only functional if there is a power supply.

1. Insert the appliance plug of the power cord into the appliance.
2. Insert the mains plug of the appliance's power cable in a socket nearby.
   The connection data of the appliance can be found on the rating plate.
3. Check the mains plug is inserted properly.

5 Familiarising yourself with your appliance

5.1 Appliance

You can find an overview of the parts of your appliance here.

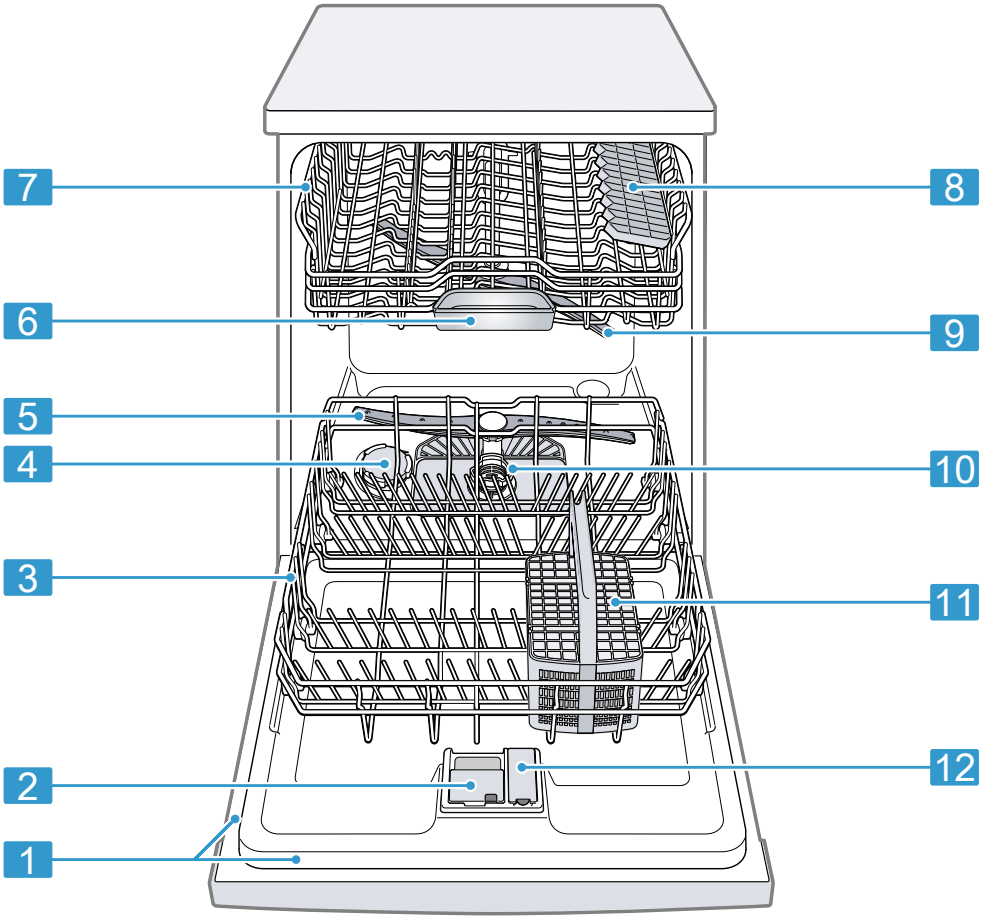

1	Rating plate	Rating plate with E number and FD number →*Page 45*. The data you need for Customer Service →*Page 44*.
2	Detergent dispenser	Add detergent to the detergent dispenser. → *"Detergent", Page 24*
3	Bottom basket	Bottom basket →*Page 19*

4	Dispenser for special salt	Add the special salt to the dispenser for special salt. → *"Water softening system", Page 20*
5	Lower spray arm	The lower spray arm washes the tableware in the bottom basket. If the tableware has not been washed properly, clean the spray arms. → *"Cleaning spray arms", Page 36*
6	Tablet collecting tray	During the wash cycle tablets automatically fall out of the detergent dispenser into the tablet collecting tray where they can fully dissolve.
7	Top basket	Top basket →*Page 18*
8	Cutlery shelf [1]	Cutlery shelf →*Page 18*
9	Upper spray arm	The upper spray arm washes the tableware in the top basket. If the tableware has not been washed properly, clean the spray arms. → *"Cleaning spray arms", Page 36*
10	Filter system	Filter system →*Page 35*
11	Cutlery basket	Cutlery basket → *"Cutlery basket", Page 20*
12	Dispenser for rinse aid	Add rinse aid to the dispenser for rinse aid. → *"Rinse aid system", Page 23*

5.2 Controls

You can use the control panel to configure all functions of your appliance and to obtain information about the operating status.

[1] Depending on the appliance specifications

With some buttons you can perform different functions.

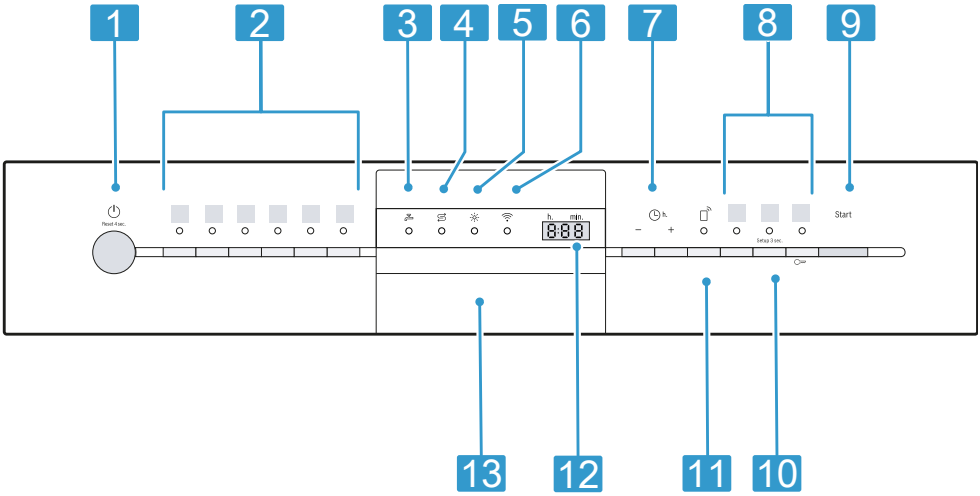

1	ON/OFF button ⏻ and reset button Reset 4 sec.	Switching on the appliance →*Page 29* Switching off the appliance →*Page 30* Terminating the programme →*Page 30*
2	Programme buttons	Programmes →*Page 15*
3	Water supply display	Display for water supply
4	Special salt refill indicator	Water softening system → *"Adding special salt", Page 21*
5	Rinse aid refill indicator	Rinse aid system → *"Adding rinse aid", Page 23*
6	WLAN display	Home Connect →*Page 32*
7	Timer programming	Setting timer programming →*Page 29*
8	Programme buttons and additional functions	Programmes → *"Programmes", Page 15* Additional functions → *"Additional functions", Page 17*
9	Start button Start	Starting the programme → *"Starting the programme", Page 29*
10	Setup 3 sec. button	If you press Setup 3 sec. for approx. 3 seconds, you can open the basic settings. → *"Changing basic settings", Page 32*
11	Remote Start Remote Start	→ *"Remote Start Remote Start", Page 33*

12	Display	The display shows information about the remaining running time or the basic settings. You can change the basic settings via the display and the setting buttons. → *"Changing basic settings", Page 32*
13	Door handle [1]	Open the appliance door.

6 Programmes

You can find an overview of the programmes that can be selected here. Different programmes, which can be found on the control panel of your appliance, are available depending on the appliance configuration.
The running time may vary depending on the programme selected. The running time depends on the water temperature, the quantity of tableware, the level of soiling and the Additional function →*Page 17* selected. The running time and energy consumption will increase if the rinse aid system is switched off or if rinse aid needs to be added.
The consumption values can be found in the quick reference guide. The consumption values relate to normal conditions and a water hardness of 16 - 20 °E. Different influencing factors such as water temperature or pipe pressure may result in deviations.

Programme	Use	Programme sequence
Intensive Intensive 70°	Tableware: ▪ Pots and pans, non-fragile tableware and cutlery Level of soiling: ▪ Stubborn, burned or dried-on food remnants containing starch and protein	Intensive: ▪ Pre-Rinse ▪ Cleaning 70 °C ▪ Intermediate rinse ▪ Final rinse 69 °C ▪ Dry
Auto Auto 45-65°	Tableware: ▪ Mixed tableware and cutlery Level of soiling: ▪ Common household food remnants lightly dried on	Sensor-controlled: ▪ Optimised by sensors depending on the soiling of the washing water.

[1] Depending on the appliance specifications

Programme	Use	Programme sequence
Eco Eco 50°	Tableware: ▪ Mixed tableware and cutlery Level of soiling: ▪ Common household food remnants lightly dried on	Most economical programme: ▪ Pre-Rinse ▪ Cleaning 50 °C ▪ Intermediate rinse ▪ Final rinse 68 °C ▪ Drying
Express Express 65° - 1h	Tableware: ▪ Mixed tableware and cutlery Level of soiling: ▪ Common household food remnants lightly dried on	Time-optimised: ▪ Cleaning 65 °C ▪ Intermediate rinse ▪ Final rinse 69 °C ▪ Dry
Express Express 45°	Tableware: ▪ Delicate tableware, cutlery, temperature-sensitive plastics and glasses Level of soiling: ▪ Lightly adhering fresh food remnants	Time-optimised: ▪ Cleaning 45 °C ▪ Intermediate rinse ▪ Final rinse 55 °C
Machine Care Machine Care	Use only if appliance is unloaded.	Machine Care 70 °C
☆ Favourite	- → *"Favourite ☆", Page 16*	-

Note: The relatively long running time in the Eco 50 ° programme is due to longer soaking and drying times. This results in optimal consumption values.

6.1 Information for test institutes

Test institutes are provided with information for comparability tests, e.g. according to EN60436.
These are the conditions for conducting the tests, however they are not the results or consumption values.
Request by e-mail to:
dishwasher@test-appliances.com
The product number (E-Nr.) and the production number (FD) are required here. They can be found on the rating plate on the appliance door.

6.2 Favourite ☆

You can save a combination of a programme and an additional function to the ☆ button.
Save the programme via the Home Connect app or on the appliance.
The pre-rinse program is saved to this button at the factory. Pre-rinse is suitable for all types of tableware.
The tableware undergoes intermediate cleaning via cold rinsing.
When programmes have been downloaded and on delivery of the appliance, the name of the programme will be displayed in the app. The dis-

play alternately shows "APP" and the remaining running time.

Tip: You can use the Home Connect app to download additional programmes and save them to the ☆ button. [1]

Saving Favourite ☆ on the appliance

1. Press ⏻.
2. Press the right programme button.
3. Press the button for the relevant additional function.
4. Press ☆ for 3 seconds.

✔ The selected programme and the additional function will flash.
✔ ☆ flashes.
✔ The programme and the additional function are saved.

Tip: To reset the programme to the pre-rinse programme stored at the factory, use the Home Connect app [1] or reset your appliance to the factory settings.

7 Additional functions

You can find an overview of the additional functions that can be selected here. Different additional functions, which can be found on the control panel of your appliance, are available depending on the appliance configuration. You can select certain additional functions depending on the programme.

Symbol	Additional function	Use
Extra Dry	Extra Dry	▪ For a better drying result the final rinse temperature is increased and the drying phase extended. ▪ Especially suitable for drying plastic parts. ▪ There is a slight increase in energy consumption and the running time is extended.
Speed Perfect	SpeedPerfect	▪ The run time is shortened by 15% to 75% [1] depending on the rinse programme. ▪ The additional function can be activated before the start of the programme and at any time when the programme is running. ▪ Energy and water consumption are increased.

8 Features

You can find an overview of the possible features of your appliance and how to use them here.

These features depend on the model of your appliance.

[1] Depending on the appliance specifications

8.1 Top basket

Arrange cups, glasses and small items of tableware in the top basket.

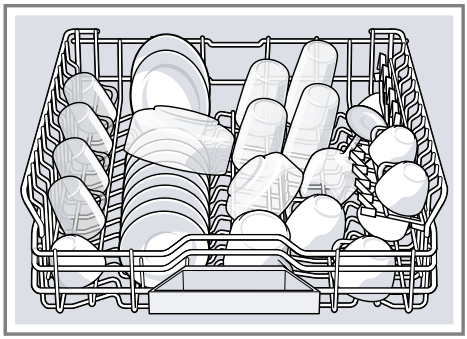

You can adjust the height of the top basket to make room for larger items of tableware.

Adjusting top basket with pairs of rollers

To wash large items of tableware in the baskets, adjust the shelf position of the top basket.

1. Pull out the top basket.
2. Remove the basket.

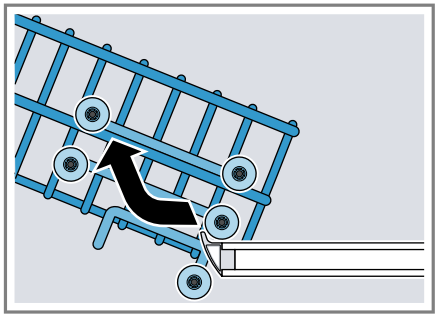

3. Re-attach the basket to the upper rollers (setting 3) or lower rollers (setting 1).

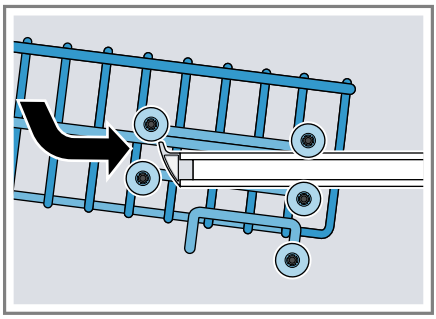

Check that the basket is level on both sides.

4. Slide the basket back in.

8.2 Etagere

Use the cutlery shelf and space underneath for small cups and glasses or for large items of cutlery, e.g. cooking spoons or serving cutlery.

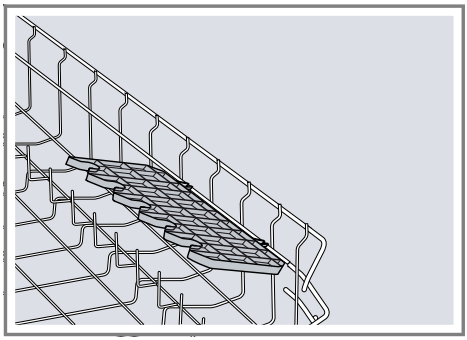

If you do not need the cutlery shelf, you can fold it up.

8.3 Bottom basket

Arrange pans and plates in the bottom basket.

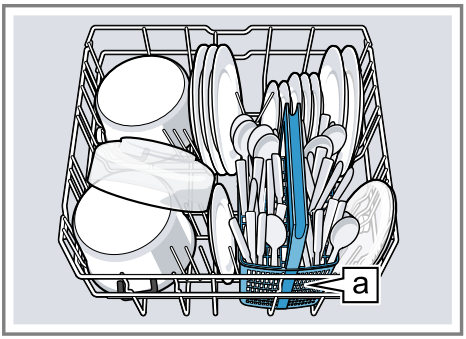

Cutlery basket a [1]

Large plates up to a diameter of 31 cm can be arranged in the bottom basket as shown.

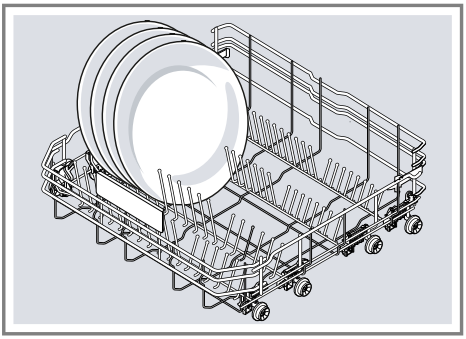

8.4 Folding prongs

Use the folding prongs to position tableware securely, e.g. plates.

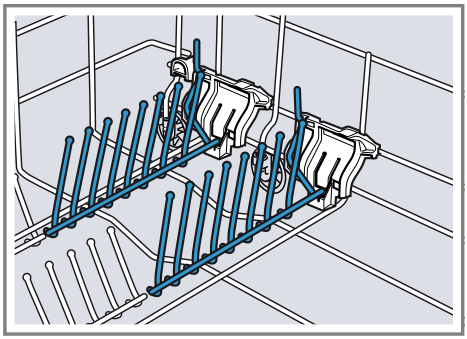

You can fold the prongs down to position pans, bowls and glasses better. [1]

Folding down prongs [1]

If you do not need the prongs, fold them down.

1. Push the lever forwards ① and fold down the prongs ②.

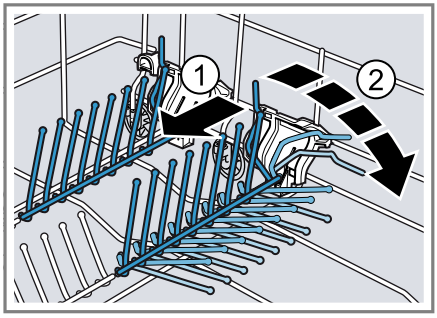

2. To use the prongs again, fold them back up.

✔ The prongs audibly click into position.

[1] Depending on the appliance specifications

8.5 Cutlery basket

Arrange cutlery in the cutlery basket, always without sorting it and with the sharp points downwards.

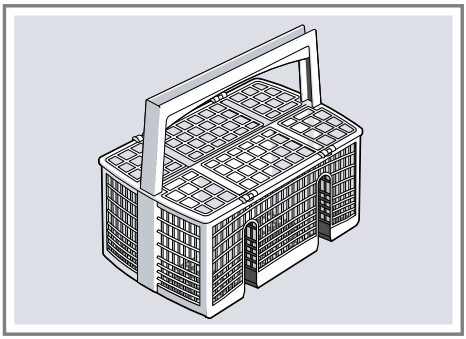

8.6 Basket heights

Set the baskets at the right height.

Appliance height 81.5 cm with cutlery basket

Level	Top basket	Bottom basket
1 max. ø	22 cm	30 cm/31 cm →*Page 19*
2 max. ø	24.5 cm	27.5 cm
3 max. ø	27 cm	25 cm

9 Before using for the first time

9.1 Performing the initial configuration

On initial start-up or after a reset to the factory settings, you will need to make settings.

Tip: Connect your appliance to a mobile device. You can conveniently change all settings via the Home Connect app.
→ *"Home Connect", Page 32*

Requirement: The appliance has been installed and connected.
→*Page 10*

1. Add special salt. →*Page 21*
2. Add rinse aid. →*Page 23*
3. Switch on the appliance. →*Page 29*
4. Setting the water softening system. →*Page 21*
5. Set the amount of rinse aid to be dispensed. →*Page 23*
6. Add detergent →*Page 24*.
7. Start the Programme with the highest cleaning temperature without tableware. →*Page 29*
   To remove any marks from water or other residues, we recommend you operate the appliance without tableware before using it for the first time.

Tip: You can change these settings and other Basic settings →*Page 30* at any time.

10 Water softening system

Hard water leaves limescale on the tableware as well as the washing tank, and parts of the appliance may become blocked.

To ensure good dishwashing results, you can treat the water with special salt and the water softening system.

To avoid damage to the appliance, water with a hardness above 9 °E must be softened.

10.1 Overview of water hardness settings

You can find an overview of the water hardness values that can be selected here.
You can find out how hard your water is from your local water company or by using a water hardness tester.

Water hardness °E	Hardness range	mmol/l	Setting value
0 - 8	Soft	0 - 1.1	H00
9 - 10	Soft	1.2 - 1.4	H01
11 - 12	Medium	1.5 - 1.8	H02
13 - 15	Medium	1.9 - 2.1	H03
16 - 20	Medium	2.2 - 2.9	H04
21 - 26	Hard	3.0 - 3.7	H05
27 - 38	Hard	3.8 - 5.4	H06
39 - 62	Hard	5.5 - 8.9	H07

Note: Set the water hardness determined on your appliance.
→ *"Setting the water softening system", Page 21*
With a water hardness of 0 - 8 °E you can dispense with special salt for dishwashers and switch off the water softening system.
→ *"Switching off the water softening system", Page 22*

10.2 Setting the water softening system

Set the water hardness on your appliance.

1. Determine the water hardness and the appropriate setting value.
   → *"Overview of water hardness settings", Page 21*
2. Press ⏻.
3. To open the basic settings, press Setup 3 sec. for 3 seconds.
✔ The display shows Hxx.
4. Press Start repeatedly until the right water hardness has been set.
   The value H04 is set at the factory.
5. To save the settings, press Setup 3 sec. for 3 seconds.
✔ The water softening system has been set.

10.3 Special salt

You can use special salt to soften water.

Adding special salt

If the special salt refill indicator lights up, add special salt to the dispenser for special salt just before the programme starts. The consumption of special salt depends on the water hardness. The higher the water hardness, the greater the consumption of special salt.

ATTENTION
Detergent may damage the water softening system.
- Only fill the dispenser of the water softening system with special dishwasher salt.

Special salt for dishwashers can damage the tub due to corrosion.
- To make sure that any special salt that escapes is washed out of the tub, add the special salt to the dispenser for special salt immediately before the programme starts.

1. Unscrew the lid of the dispenser for special salt and remove.
2. On initial start-up: Fill the dispenser right up with water.
3. **Note:** Only use special salt for dishwashers.
   Do not use salt tablets.
   Do not use table salt.
   Add the special salt to the dispenser.

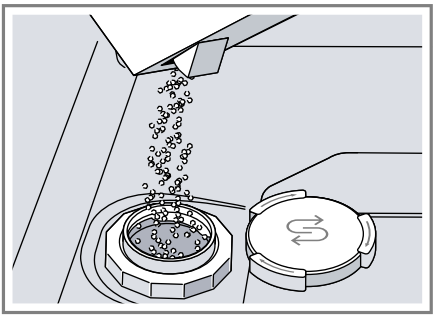

   Fill the dispenser right up with special salt. The water in the dispenser is displaced and forced out.
4. Place the lid back on the dispenser and turn to close.

10.4 Switching off the water softening system

If you find the special salt refill indicator irritating, e.g. when using combined detergents with salt replacement substances, you can switch the indicator off.

Note
To avoid damage to the appliance, only switch off the water softening system in the following cases:
- The water hardness is max. 26 °E and you are using a combined detergent with salt replacement substances. According to the manufacturers, combined detergents with salt replacement substances can generally only be used up to a water hardness of 26 °E without adding special salt.
- The water hardness is 0 - 8 °E. You do not need to use special salt.

1. Press ⏻.
2. To open the basic settings, press Setup 3 sec. for 3 seconds.
✔ The display shows Hxx.
3. Press Start repeatedly until the display shows H00.
4. To save the settings, press Setup 3 sec. for 3 seconds.
✔ The water softening system is switched off and the salt refill indicator is deactivated.

Note: When switching from combined detergents with salt replacement substances to separate detergents, please make sure to set the water softening system to the right water hardness again.
→ *"Setting the water softening system", Page 21*

10.5 Regeneration of the water softening system

In order to obtain fault-free function of the water softening system, the appliance performs regeneration of the

water softening system at regular intervals.
Regeneration of the water softening system takes place before the end of the main rinse cycle in all programmes. It will increase the run time and consumption values, e.g. water and electricity.

Overview of consumption values with regeneration the water softening system

Here you can find an overview of the maximum additional running time and consumption values during regeneration of the water softening system.

Regeneration of the water softening system after x washing programmes	6
Additional running time in minutes	7
Additional water consumption in litres	5
Additional power consumption in kWh	0.05

The consumption values specified are laboratory measurements determined in accordance with the currently applicable standard using the Eco 50° programme and with the factory value of the water hardness set to 16 - 20 °E.

11 Rinse aid system

11.1 Rinse aid

For optimum drying results, use rinse aid.
Only use rinse aid for domestic dishwashers.

Adding rinse aid

If the rinse aid refill indicator lights up, top up with rinse aid. Only use rinse aid for domestic dishwashers.

1. Press the catch on the lid of the dispenser for rinse aid ① and lift ②.

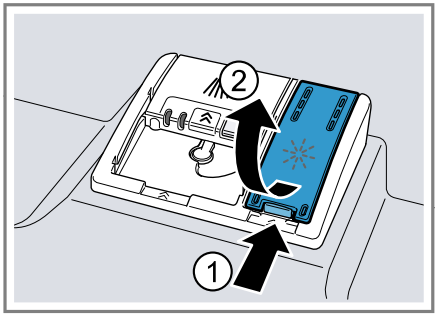

2. Add rinse aid up to the max mark.

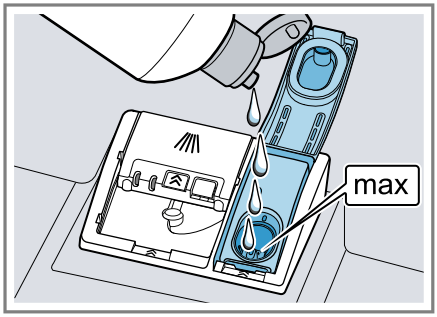

3. If rinse aid spills out, remove it from the tub.
   Spilled rinse aid can cause excessive frothing during the wash cycle.
4. Close the lid of the dispenser for rinse aid.

✔ The lid clicks into position.

11.2 Setting the amount of rinse aid

If there are streaks or water marks on tableware, change the amount of rinse aid.

1. Press ⏻.

2. To open the basic settings, press Setup 3 sec. for 3 seconds.
✔ The display shows Hxx.
3. Press Setup 3 sec. repeatedly until the display shows the value r05 set at the factory.
4. Press Start repeatedly until the right amount of rinse aid has been set.
   - A low setting adds less rinse aid during the wash cycle and reduces streaking on tableware.
   - A higher setting adds more rinse aid during the wash cycle, reduces water marks and improves the drying result.
5. To save the settings, press Setup 3 sec. for 3 seconds.
✔ The amount of rinse aid to be dispensed has been set.

11.3 Switching the rinse aid system off

If you find the rinse aid refill indicator irritating, e.g. when using combined detergents with a rinse aid component, you can switch the rinse aid system off.

Tip: The function of rinse aid is limited with combined detergents. You will generally get better results using rinse aid.

1. Press ⏻.
2. To open the basic settings, press Setup 3 sec. for 3 seconds.
✔ The display shows Hxx.
3. Press Setup 3 sec. repeatedly until the display shows the value r05 set at the factory.
4. Press Start repeatedly until the display shows r00.
5. To save the settings, press Setup 3 sec. for 3 seconds.
✔ The rinse aid system is switched off and the rinse aid refill indicator is deactivated.

Note: When switching from combined detergents with a rinse aid component to separate detergents, please make sure to set the rinse aid system to the right amount of rinse aid again.
→ *"Setting the amount of rinse aid", Page 23*

12 Detergent

12.1 Suitable detergents

Only use detergents that are suitable for dishwashers. Both separate and combined detergents are suitable.
For optimum washing and drying results, use separate detergent, adding Special salt → *Page 21* and Rinse aid → *Page 23* separately.
Modern, powerful detergents mainly use a low-alkaline formulation with enzymes. Enzymes break down starch and remove protein. Oxygen-based bleaching agents are generally used to remove coloured marks, e.g. tea or ketchup.

Note: Follow the manufacturer's instructions for each detergent.

Tabs

Tabs are suitable for all cleaning functions and do not need to be measured out.
With shorter programmes tabs sometimes do not dissolve entirely and leave residues of detergent. This may impair the cleaning effect.

Powder detergent

Powder detergent is recommended for shorter programmes.
The dosage can be adjusted to the level of soiling.

Liquid detergent

Liquid detergent works faster and is recommended for shorter programmes without PreRinse.

Sometimes liquid detergent may leak out despite the detergent dispenser being closed. This is not a fault and is non-critical if you remember the following:

- Only choose a programme without PreRinse.
- Do not select timer programming for starting the programme.

The dosage can be adjusted to the level of soiling.

Separate detergents

Separate detergents are products that do not contain components other than detergent, e.g. powder detergent or liquid detergent.
With powder and liquid detergent the dosage can be individually adjusted to the level of soiling of the tableware.
For better washing and drying results and to avoid damage to the appliance, please additionally use Special salt →*Page 21* and Rinse aid →*Page 23*.

Combined detergent

Besides conventional separate detergents, a number of products are available with additional functions. These products contain not only detergent but also rinse aid and salt replacement substances (3in1) and, depending on the combination (4in1, 5in1, ...), additional components such as glass protection or stainless steel cleaner.
According to the manufacturers, combined detergents generally only function up to a water hardness of 26 °E. With a water hardness above 26 °E you will need to add special salt and rinse aid. For the best washing and drying results we recommend using special salt and rinse aid from a water hardness of 17 °E. If you are using combined detergent, the washing programme is adjusted automatically to ensure the best possible washing and drying result.

12.2 Unsuitable detergents

Do not use detergent which could cause damage to the appliance or present a risk to health.

Hand washing-up liquid

Hand washing-up liquid can cause increased frothing and damage the appliance.

Detergent containing chlorine

Chlorine residue on tableware may present a risk to health.

12.3 Information on detergents

Follow the instructions on detergents in everyday use.

- Detergents marked as "organic" or "ecological" (environmentally friendly) generally contain lower levels of active agents or completely dispense with certain substances. The cleaning effect may be restricted here.
- Set the rinse aid and the water softening system to the separate detergent or combined detergent in use.
- According to the manufacturers, combined detergents with salt replacement substances can only be used up to a certain water hardness, usually 26 °E, without adding special salt. For the best washing and drying results we re-

commend using special salt from a water hardness of 17 °E.

- To prevent sticking, only touch detergents in a water-soluble pouch with dry hands and only ever place them in a dry detergent dispenser.
- Even if the rinse aid and special salt refill indicators light up, washing programmes will run properly with combined detergents.
- The function of rinse aid is limited with combined detergents. You will generally get better results using a separate rinse aid.
- Use tablets with a special drying performance.

12.4 Adding detergent

1. To open the detergent dispenser, press the locking latch.
2. Add the detergent to the dry detergent dispenser.

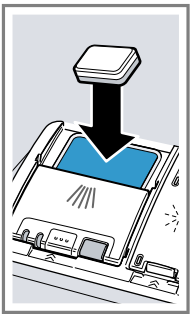

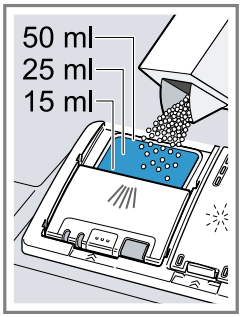

If you are using tablets, one is enough. Insert the tablets in a horizontal position.
If you are using powder or liquid detergent, follow the manufacturer's instructions and quantities for dosage in the detergent dispenser.
20 ml – 25 ml detergent is sufficient for normal soiling. If tableware is only lightly soiled, slightly less than the amount of detergent specified is usually sufficient.

3. Close the lid of the detergent dispenser.

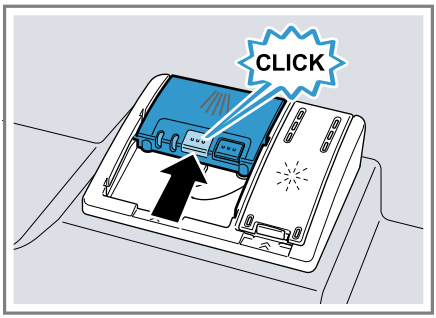

✔ The lid clicks into position.
✔ The detergent dispenser will open automatically at the optimum time during the programme. Powder or liquid detergent will spread around the washing tank and dissolve there. Tablets will fall into the tablet collecting tray and dissolve in the right dosage. In order to ensure that tablets can dissolve evenly, do not place any other objects in the tablet collecting tray.

Tip: If you use powder detergent and select a program with pre-rinse, you can also add a little detergent to the interior door of the appliance.

13 Tableware

Only clean tableware that is suitable for dishwashers.

Note: Decorated glassware and parts made of aluminium or silver may fade or discolour with dishwashing. Delicate types of glass may turn cloudy after a few washing cycles.

13.1 Damage to glass and tableware

Only put glasses and china in the dishwasher if it is marked as dishwasher-safe by the manufacturer. Avoid damage to glass and tableware.

Cause	Recommendation
The following tableware is not dishwasher-safe: ▪ Items of cutlery and tableware made from wood ▪ Decorated glassware, antique and hand-crafted tableware ▪ Plastic parts not resistant to heat ▪ Tableware made from copper or tin ▪ Tableware soiled with ash, wax, lubricating grease or paint ▪ Very small items of tableware	Only put tableware in the dishwasher if it is marked as dishwasher-safe by the manufacturer.
The chemical composition of detergent causes damage.	Use a detergent marked by the manufacturer as gentle on tableware.
Highly caustic alkaline or highly acidic cleaning solutions, in particular commercial or industrial cleaners, are not safe to use in the dishwasher with aluminium.	If you are using highly caustic alkaline or highly acidic cleaning agents, in particular commercial or industrial cleaning agents, do not put aluminium parts in the dishwasher interior.
The water temperature of the programme is too high.	Select a programme with lower temperatures. After the programme has ended, take glassware and cutlery out of the appliance without delay.

13.2 Arrange tableware

Arrange tableware correctly to optimise the dishwashing result and prevent damage to both the appliance and tableware.

Note: Load the baskets so that no projecting items of tableware interfere with closing of the door. Projecting items of tableware may push the appliance door open during the programme, so allowing steam to escape and water to leak out around the door. This could damage your kitchen units.

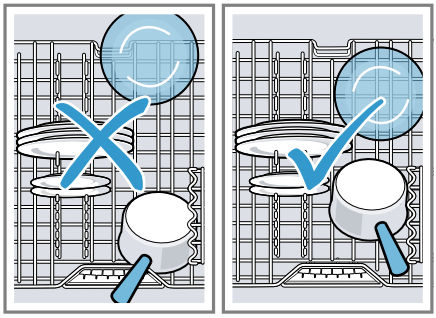

Tips

- Using the appliance allows you to save energy and water compared to washing-up by hand.

- See our website for examples of how to load your appliance efficiently.
- To save energy and water, load the machine with the number of place settings specified (standard load with tableware and cutlery).
  → *"Technical specifications", Page 45*
- For better washing and drying results, position items with curves or recesses at an angle so water can run off.

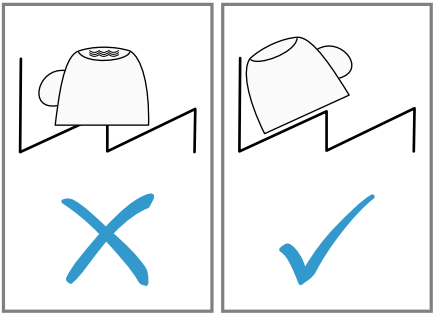

1. Remove large remnants of food from tableware.
   To save resources, do not pre-rinse tableware under running water.
2. Observe the following when arranging tableware:
   - Put heavily soiled tableware in the bottom basket, e.g. pans. The more powerful the spray jet, the better the dishwashing result will be.
   - To prevent damage to tableware, arrange it so it is stable and cannot tip over.
   - To prevent injury, arrange cutlery with the points and sharp edges facing down.
   - Position containers with the openings facing down so no water can collect in them.
   - Do not block the spray arms - make sure that they can turn freely.
   - Do not place small parts in the tablet collecting tray and do not block it with tableware so as not to obstruct the lid of the detergent dispenser.

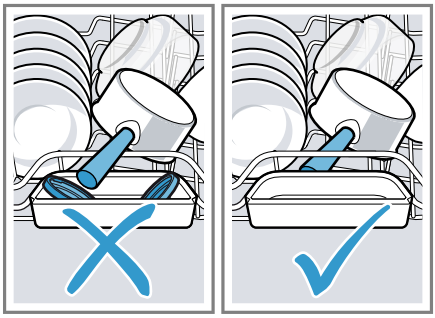

13.3 Removing tableware

⚠ **WARNING**
Risk of injury!
Hot tableware can cause burns to the skin. When hot, tableware is sensitive to shock, may crack and can result in injury.

- When the programme has ended, do not empty the appliance until the tableware has cooled down for a while.

1. To prevent water dripping on the tableware, unload it starting at the bottom and working up.
2. Check the washing tank and accessories for soiling and clean if necessary.
   → *"Cleaning and servicing", Page 34*

14 Basic operation

14.1 Switching on the appliance

- Press ⏻.
  The Eco 50° programme is set by default.
  The Eco 50° programme is especially environmentally friendly and ideal for normally soiled tableware. It is the most efficient programme for the combination of energy/water consumption for this type of tableware and evidences conformity with the EU Ecodesign Directive.
  If you do not perform any actions on the appliance for 10 minutes, the appliance will automatically switch off.

14.2 Setting a programme

To adjust the washing programme to the soiling level of the tableware, select a suitable programme.

Requirement: The appliance door is closed.

- Press the right programme button.
- ✔ The programme is set and the programme button flashes.
- ✔ The remaining running time of the programme appears on the display.

14.3 Setting additional functions

You can set additional functions to complete the washing programme selected.

Note: The additional functions which can be used depend on the programme selected.

- Press the button for the relevant additional function.
  → *"Additional functions", Page 17*
- ✔ The additional function is set and the additional function button flashes.

14.4 Setting timer programming

You can delay the start of the programme by up to 24 hours.

1. Press +.
   ✔ "h:01" appears in the display.
2. Use − or + to set the required start time for the programme.
3. Press Start.
   ✔ This activates timer programming.

Tip: To deactivate timer programming, press − or + repeatedly until "h:00" appears in the display.

14.5 Starting the programme

- Press Start.
- ✔ The programme has ended when the display shows "0:00".

Notes

- If you want to add more tableware while the appliance is running, do not use the tablet collecting tray as a handle for the top basket. You might touch the partially dissolved tablet.
- You can only change a programme when running if you cancel it.
  → *"Terminate programme", Page 30*
- The appliance switches off automatically 1 minute after the end of the programme to save energy. If you open the appliance door immediately after the programme has ended, the appliance will switch off after 4 seconds.

14.6 Activating button lock

The button lock prevents the appliance from being operated accidentally or incorrectly while running.

- Press ⊂⊃ for approx. 3 seconds.
- ✔ The button lock is activated and will be automatically deactivated at the end of the programme.
- ✔ When the appliance is operated, ⊂⊃ flashes on the display.
- ✔ The button lock remains activated with a power failure.

14.7 Deactivate button lock

- Press ⊂⊃ for approx. 3 seconds.

14.8 Interrupting programme

Note: When you open the appliance door once the appliance has heated up, leave the door slightly ajar for a few minutes and then close it. This will help prevent excess pressure building up in the appliance and stop the appliance door bursting open.

1. Press ⏻.
- ✔ The programme is saved and the appliance switches off.
2. Press ⏻ to resume the programme.

14.9 Terminate programme

To end a programme early or to switch from a programme that has already started, you will need to cancel it first.

- Press Reset 4 sec. for approx. 4 seconds.
- ✔ The programme is terminated and the appliance is reset. All LEDs light up for approx. 1 minute.
- ✔ As soon as the LEDs are off, the display shows "0:01" and the residual water is pumped out.
- ✔ The programme is cancelled and ends after approx. 1 minute.

14.10 Switching off appliance

1. Please note the information on Safe use → *Page 10*.
2. Press ⏻.
3. To prevent damage from dripping water, turn the water tap off tight (not applicable to appliances with Aqua-Stop).

Tip: If you press ⏻ during the wash cycle, the programme currently running will be interrupted. When you switch the appliance back on, the programme continues automatically.

15 Basic settings

You can configure the basic settings for your appliance to meet your needs.

15.1 Overview of the basic settings

The basic settings depend on the features of your appliance.

	Display text	Selection	Description
Water hardness	H04 [1]	H00 - H07	Set the water softening system to your water hardness. → *"Setting the water softening system", Page 21*

[1] Factory setting (may vary according to model)

	Display text	Selection	Description
			Level H00 switches the water softening system off.
Rinse aid dispensing	r05 [1]	r00 - r06	Set the amount of rinse aid to be dispensed. → *"Setting the amount of rinse aid", Page 23* Switch the rinse aid system off with level r:00.
Intensive drying	d00 [1]	d00 - d01	The temperature is increased during the final rinse, which improves the drying result. This may increase the run time slightly. **Note:** Not suitable for delicate items of tableware. Switch Extra Dry on "d01" or off "d00".
WiFi	Cn0	Cn0 - Cn1	Switch the wireless network connection on or off. Level "Cn0" switches the wireless network connection off. This basic setting is not available until you have connected the appliance with the Home Connect app. → *"Home Connect", Page 32*
Remote Start	rc1	rc0 - rc2	Activate or deactivate remote start. The following settings are possible: ▪ With the setting "rc0", the function is permanently deactivated. ▪ With the setting "rc1", the function can be selected via the Remote Start button. → *"Activating Remote Start Remote Start", Page 33* ▪ With the setting "rc2", the function is permanently activated.

[1] Factory setting (may vary according to model)

	Display text	Selection	Description
			This basic setting is not available until you have connected the appliance with the Home Connect app. → *"Home Connect", Page 32*
Factory setting	rE	YES	Restore changed settings to the factory settings. The settings for initial start-up must be configured.

15.2 Changing basic settings

Tip: Connect your appliance to a mobile device. You can conveniently change all settings via the Home Connect app.
→ *"Home Connect", Page 32*

1. Press ⏻.
2. To open the basic settings, press Setup 3 sec. for 3 seconds.
✔ The display shows Hxx.
3. Press Setup 3 sec. repeatedly until the display shows the required setting.
4. Press Start repeatedly until the display shows the right value.
   You can change several settings.
5. To save the settings, press Setup 3 sec. for 3 seconds.

16 Home Connect

This appliance is network-capable. Connect your appliance to a mobile device to control its functions via the Home Connect app.
The Home Connect services are not available in every country. The availability of the Home Connect function depends on the availability of the Home Connect services in your country. You can find information about this at: *www.home-connect.com*.

To be able to use Home Connect, you must first set up the connection to the WLAN home network (Wi-Fi [1]) and to the Home Connect app.
The Home Connect app guides you through the entire login process. Follow the instructions, noting the information in the Home Connect app.

Note: Please note the safety precautions in this instruction manual and make sure that they are also observed when operating the appliance via the Home Connect app.
→ *"Safety", Page 4*

16.1 Setting up Home Connect

Requirements

- The appliance is receiving signals from the WLAN home network (Wi-Fi) at its installation location.
- The appliance door is closed.

1. Scan the following QR code.
   You can install the Home Connect app and connect your appliance via the QR code.
2. Follow the instructions in the Home Connect app.

[1] Wi-Fi is a registered trademark of the Wi-Fi Alliance.

16.2 Remote Start Remote Start

You can use the Home Connect app to start the appliance with your mobile device.

Tip: If you select "rc2" in the Basic settings →*Page 31* of this function, the function is permanently activated and you can start your appliance with a mobile device at any time.

Activating Remote Start Remote Start

When you have selected "rc1" in the basic settings of this function, activate the function on your appliance.

Requirements

- The appliance is connected to your WLAN home network.
- The appliance is connected to the Home Connect app.
- "rc1" is selected in the Basic settings →*Page 31* of this function.
- A programme is selected.
- ▸ Press Remote Start.
  If you open the appliance door, the function is automatically deactivated.
- ✔ Remote Start button lights up.

Tip: To deactivate the function, press Remote Start.

16.3 Smart Start [1]

Smart Start automatically determines the optimal time for the programme to start.
You can use the Home Connect app to activate or deactivate the function.

Activating Smart Start

Requirements

- Smart Start is activated via the Home Connect app.
- Preferences for time and energy are set in the Home Connect app.

1. Press ⏻.
- ✔ The display shows the optimal start time and the duration of the selected programme.

2. Press Start.
- ✔ Smart Start is active.
- ✔ The programme starts as soon as the optimal time is reached.

Tip: Deactivate the function a single time by pressing Start in.

16.4 Data protection

Please see the information on data protection.

The first time your appliance is registered on a home network connected to the Internet, your appliance will transmit the following types of data to the Home Connect server (initial registration):

- Unique appliance identification (consisting of appliance codes as well as the MAC address of the installed Wi-Fi communication module).
- Security certificate of the Wi-Fi communication module (to ensure a secure data connection).
- The current software and hardware version of your appliance.
- Status of any previous resetting to factory settings.

This initial registration prepares the Home Connect functions for use and is only required when you want to use the Home Connect functions for the first time.

Note: Please note that the Home Connect functions can only be utilised with the Home Connect app. Information on data protection can be retrieved in the Home Connect app.

[1] Depending on the appliance specifications

17 Cleaning and servicing

17.1 Cleaning the tub

⚠ **WARNING**

Risk of harm to health!

Using detergents containing chlorine may result in harm to health.

- Never use detergents containing chlorine.

1. Remove any coarse soiling in the interior with a damp cloth.
2. Add detergent to the detergent dispenser.
3. Select the programme with the highest temperature.
4. Start the programme without tableware. → *Page 29*

17.2 Cleaning products

Only use suitable cleaning products to clean your appliance.
→ *"Safe use", Page 10*

17.3 Tips on appliance care

Follow the tips on appliance care to make sure your appliance functions properly at all times.

Action	Benefit
Wipe the door seals, the front of the dishwasher and the control panel regularly using a damp cloth and washing-up liquid.	This ensures the parts of the appliance will remain clean and hygienic.
If the appliance is not going to be used for a while, leave the door slightly ajar.	This will prevent unpleasant odours.

17.4 Machine Care Machine Care

Deposits, e.g. from remnants of food and limescale, can cause your appliance to malfunction. To avoid such faults and reduce odours, we recommend cleaning your appliance at regular intervals.
Machine Care combined with machine care products and machine cleaners is the right programme for the care of your appliance.

Tip: You can get our tested and approved Dishwasher Care and Machine Cleaner for Dishwashers online at *https://www.bosch-home.com/store* or from customer service.

Machine Care is a programme which removes various deposits in one washing cycle. Cleaning takes place in two phases:

Phase	Removal of	Detergent	Placement
1	Grease and limescale	Liquid machine care product or machine descaler in powder form.	Appliance interior, e.g. bottle hung in the cutlery basket or powder in the interior.
2	Food remnants and deposits	Machine cleaner	Detergent dispenser

To ensure optimum cleaning performance, the programme doses the detergents independently of each another during the relevant cleaning phase. Correct placement of the detergents is necessary here.
Run Machine Care without tableware if the indicator for Machine Care lights up on the control panel or if advised to do so by the display. The indicator will go out after you have run Machine Care. If your appliance does not have a reminder function, we recommend performing Machine Care every 2 months.

Running Machine Care

Notes

- Run the Machine Care programme without any tableware in the dishwasher.
- Only use machine care products and machine cleaners specially designed for dishwashers.
- Make sure that there are no aluminium parts, e.g. extractor hood grease filters or aluminium pans, in the interior of the appliance.
- If you have not run Machine Care after 3 washing cycles, the indicator for Machine Care will go out automatically.
- For optimum cleaning performance, ensure the correct placement of cleaners.
- Follow the safety instructions given on the packagings of the machine care products and machine cleaners.

1. Remove any coarse soiling in the interior with a damp cloth.
2. Clean the filters.
3. Place the machine care product in the appliance interior.
   Only use machine care products specially designed for dishwashers.
4. Pour the machine cleaner into the detergent dispenser until it is filled completely.
   Do not place any additional machine cleaner in the appliance interior.
5. Press Machine Care.
6. Press Start.

✔ Machine Care is run.
✔ Once the programme has ended, the indicator for Machine Care goes out.

17.5 Filter system

The filter system removes coarse soiling from the dishwashing cycle.

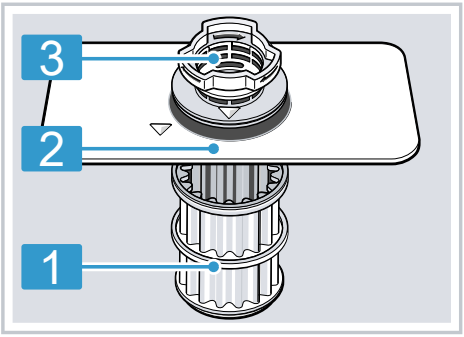

1	Micro filter
2	Fine filter
3	Coarse filter

Cleaning filters

Soiling in the dishwashing water may block the filters.

1. After each wash check the filters for residue.

2. Turn the coarse filter anticlockwise ① and remove the filter system ②.
   - Check that no foreign objects fall into the sump.

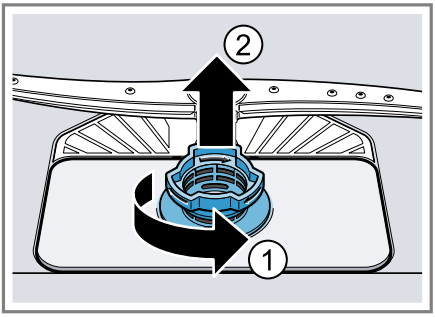

3. Pull down the micro filter to remove.

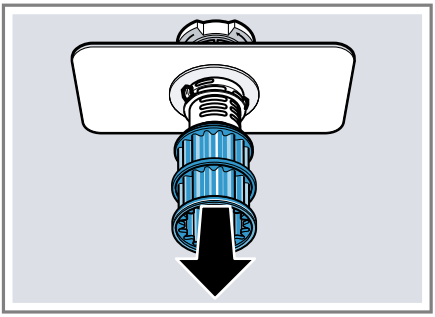

4. Press the locking catches ① together and lift the coarse filter out ②.

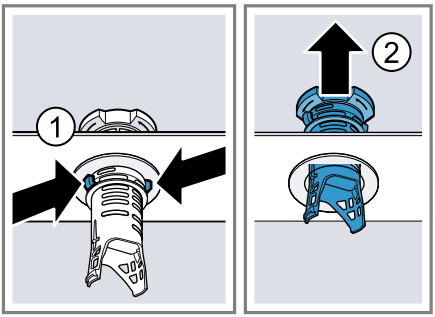

5. Clean the filter elements under running water.
   Carefully clean the rim of dirt between the coarse and the fine filter.
6. Re-assemble the filter system.
   Make sure that the locking catches on the coarse filter click into position.
7. Insert the filter system into the appliance and turn the coarse filter clockwise.
   - Make sure that the arrow markings match up.

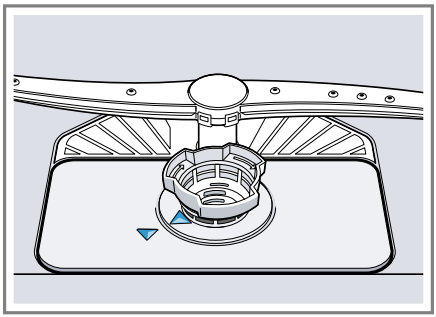

Tip: Connect your appliance to a mobile device. The Home Connect app will tell you as soon as you need to clean the filters.
→ *"Home Connect", Page 32*

17.6 Cleaning spray arms

Limescale and soiling in the dishwashing water may block the nozzles and bearings on the spray arms. Clean the spray arms regularly.

1. Unscrew the upper spray arm ① and pull down to remove ②.

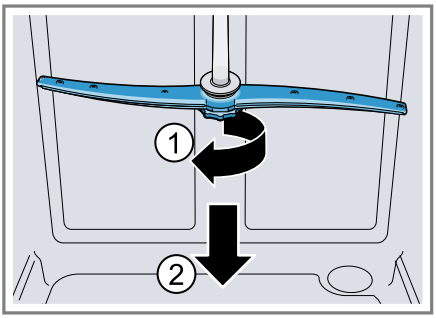

2. Pull up the lower spray arm to remove.

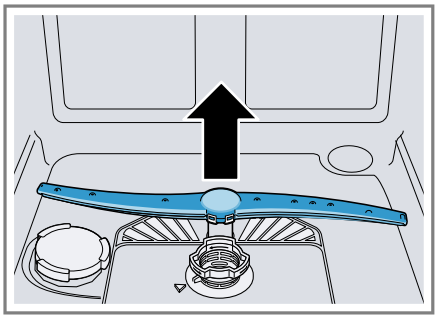

3. Check the outlet nozzles on the spray arms for blockages under running water and remove any foreign objects.
4. Insert the lower spray arm.
✔ The spray arm clicks into position.
5. Insert the upper spray arm and screw it firmly in place.

18 Troubleshooting

You can rectify minor faults on your appliance yourself. Read the troubleshooting information before contacting after-sales service. This will avoid unnecessary costs.

Tips

- Permanently connect your appliance to the Home Connect app to automatically receive software updates. This allows errors to be eliminated, performance to be improved and new functions to be made available.
- You can find further information and explanations on troubleshooting online by scanning the QR code on the title page and on our website *www.bosch-home.com*.

⚠ **WARNING**

Risk of electric shock!

Improper repairs are dangerous.

- ▸ Repairs to the appliance should only be carried out by trained specialist staff.
- ▸ Only use genuine spare parts when repairing the appliance.
- ▸ If the power cord or the appliance power cable of this appliance is damaged, it must be replaced with a special power cord or special appliance power cable, which is available from the manufacturer or its Customer Service.

Fault	Cause and troubleshooting
Display "Check water supply" flashes	A technical fault is present. **1.** Press ⏻. **2.** Unplug the appliance or switch off the fuse. **3.** Wait at least 2 minutes. **4.** Insert the mains plug of the appliance in a socket or switch on the fuse. **5.** Switch the appliance on. **6.** If the problem occurs again: ▸ Press ⏻. ▸ Turn off the water tap. ▸ Pull out the mains plug. ▸ Contact Customer Service →*Page 44* and give the error code.
E:30-00 will light up alternately.	Water protection system is activated. **1.** Turn off the water tap. **2.** Do not disconnect the appliance from the power supply. **3.** Call Customer Service →*Page 44*.
E:31-00 will light up alternately.	Water protection system is activated. **1.** Turn off the water tap. **2.** Do not disconnect the appliance from the power supply. **3.** Call Customer Service →*Page 44*.
E:32-00 will light up alternately or indicator for water supply lights up.	Supply hose is kinked. ▸ Install the inlet hose without kinks.
	Water tap is turned off. ▸ Turn on the water tap.
	Water tap is jammed or furred up. ▸ Turn on the water tap. The flow rate must be at least 10 l/min when the water supply is open.
	The filters in the water connection of the supply or AquaStop hose are blocked. **1.** Switch off the appliance. **2.** Pull out the mains plug. **3.** Turn off the water tap. **4.** Unscrew the water connection.

Fault	Cause and troubleshooting
E:32-00 will light up alternately or indicator for water supply lights up.	**5.** Remove the filter from the inlet hose 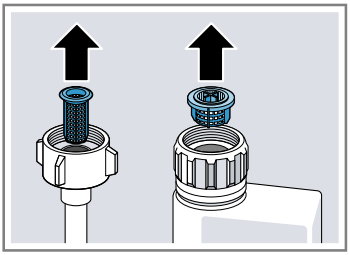 **6.** Clean the filter. **7.** Re-insert the filter in the inlet hose. **8.** Screw the water connection back on. **9.** Check the water connection for leaks. **10.** Restore the power supply. **11.** Switch the appliance on.
E:34-00 will light up alternately.	Water is continuously running into the appliance. **1.** Turn off the water tap. **2.** Do not disconnect the appliance from the power supply. **3.** Call Customer Service →*Page 44*.
E:6102 lights up.	Not an appliance fault. Wastewater pump is blocked or the cover of the wastewater pump is loose. **1.** Clean the wastewater pump. → *"Clean wastewater pump", Page 43* **2.** Secure the cover of the wastewater pump so it clicks into position. → *"Clean wastewater pump", Page 43*
E:61-03 will light up alternately. Water is not drained.	Not an appliance fault. Siphon connection is still closed or the wastewater hose is kinked or blocked. **1.** Check the connection to the siphon and open if necessary. **2.** Install wastewater hose without kinks. **3.** Remove residues.

Fault	Cause and troubleshooting
E:61-03 will light up alternately. Water is not drained.	Not an appliance fault. Wastewater pump is blocked or the cover of the wastewater pump is loose. **1.** Clean the wastewater pump. → *"Clean wastewater pump", Page 43* **2.** Secure the cover of the wastewater pump so it clicks into position. → *"Clean wastewater pump", Page 43*
E:92-40 will light up alternately.	Filters are soiled or blocked. ▸ Clean the filters. → *"Cleaning filters", Page 35*
All LEDs lit up or flashing.	A software update is possibly installing. **1.** Wait until the software update has been installed. This process can take approx. 30 minutes. **2.** If the appliance is not ready to use after 30 minutes, perform a reset. ▸ Press the main switch button for approx. 4 seconds. ✔ Your appliance is resetting.
	Electronics have detected a fault. **1.** Press the main switch button for approx. 4 seconds. → *"Controls", Page 13* The appliance is reset and restarted. **2.** If the problem occurs again: ▸ Switch off the appliance. ▸ Pull out the mains plug or switch off the fuse in the fuse box. ▸ Wait at least 2 minutes. ▸ Switch on the fuse in the fuse box or insert the mains plug. ▸ Switch the appliance on. **3.** If the problem occurs again: ▸ Contact customer service. → *"Customer Service", Page 44*

Fault	Cause and troubleshooting
Remnants of food on tableware.	Tableware is placed too close together or basket is overfilled. **1.** Arrange tableware with sufficient space in between. The spray jets must reach the surfaces of the tableware. **2.** Avoid points of contact.
	Spray arm rotation is blocked. ▸ Arrange tableware so that it does not obstruct spray arm rotation.
	Spray arm nozzles are blocked. ▸ Clean the spray arms. → *"Cleaning spray arms", Page 36*
	Filters are soiled. ▸ Clean the filters. → *"Cleaning filters", Page 35*
	Filters are inserted incorrectly and/or not engaged. **1.** Insert the filters properly. → *"Filter system", Page 35* **2.** Engage the filters.
	Washing programme selected too weak. ▸ Select a more intensive washing programme. → *"Programmes", Page 15*
	Tableware has been precleaned too intensely. The sensors chose a weaker programme. Stubborn soiling cannot be entirely removed. ▸ Only remove large remnants of food and do not prerinse tableware.
	Tall narrow receptacles in corner areas are not rinsed adequately. ▸ Do not position tall narrow receptacles at too great an angle or in corner areas.

Fault	Cause and troubleshooting
Remnants of food on tableware.	Top baskets on right and left are not set to same height. ▸ Set the upper basket on the left and right to the same height. → *"Top basket", Page 18*
Removable streaks are present on glasses, glassware with a metallic appearance and cutlery.	Amount of rinse aid to be dispensed is set too high. ▸ Set the rinse aid system to a lower setting. → *"Setting the amount of rinse aid", Page 23*
	No rinse aid has been added. ▸ Add rinse aid. → *"Adding rinse aid", Page 23*
	Detergent residue is present in the final rinse. Lid of the detergent dispenser is blocked by tableware items and will not open fully. **1.** Arrange tableware in the top basket tableware so the tab collecting tray is not obstructed by tableware. → *"Arrange tableware", Page 27* Items of tableware are blocking the dispenser lid. **2.** Do not place tableware or fragrance dispensers in the tablet collecting tray.
	Tableware has been precleaned too intensely. The sensors chose a weaker programme. Stubborn soiling cannot be entirely removed. ▸ Only remove large remnants of food and do not prerinse tableware.
Rust spots on cutlery.	Cutlery is not sufficiently rust-resistant. Knife blades are often more severely affected. ▸ Use rust-resistant tableware.
	Cutlery may also rust if washed together with rusting items. ▸ Do not wash rusting items.
	Salt content in washing water is too high. **1.** Remove any spilled special salt from the tub. **2.** Screw the cap of the special salt dispenser on tight.
Detergent residue is present in the detergent dispenser or the tablet collecting tray.	Spray arms were blocked by tableware so detergent was not rinsed out. ▸ Check that the spray arms are not blocked and can rotate freely.
	Detergent dispenser was damp when detergent was added. ▸ Only add detergent to a detergent dispenser when dry.

Fault	Cause and troubleshooting
Special salt refill indicator lights up.	Insufficient special salt. ▸ Add Special salt →*Page 21*.
	Sensor does not detect special salt tablets. ▸ Do not use special salt tablets.

18.1 Clean wastewater pump

Large remnants of food or foreign bodies can block the waste water pump. As soon as the rinsing water no longer drains properly, the waste water pump must be cleaned.

⚠ **WARNING**
Risk of injury!
Sharp and pointed objects or fragments of glass may block the waste water pump and cause injury.
▸ Remove any foreign bodies carefully.

1. Disconnect the appliance from mains power supply.
2. Remove the top and bottom basket.
3. Remove the filter system.
4. Scoop out any water.
   Use a sponge if necessary.
5. Prise off the pump cover using a spoon and grip it by the crosspiece.

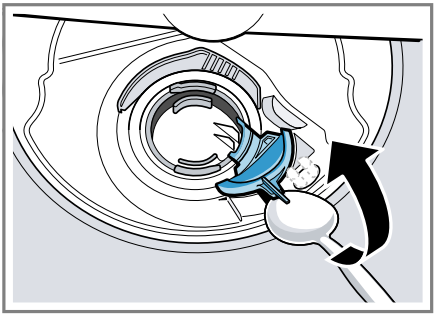

6. Lift the pump cover inwards at an angle and remove.
✔ You can now reach the impeller with your hand.
7. Remove any remnants of food and foreign bodies in the area of the impeller.
8. Insert the pump cover ① and press down ②.

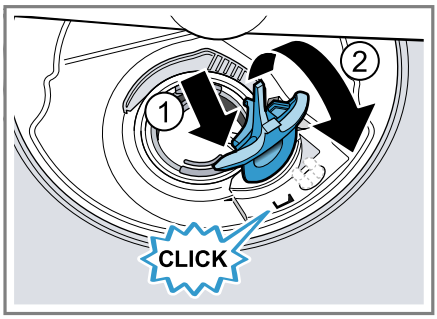

✔ The pump cover clicks into position.
9. Install the filter system.
10. Insert the top and bottom basket.
11. Connect the appliance to the mains.

19 Transportation, storage and disposal

19.1 Removing the appliance

1. Disconnect the appliance from the mains power supply.
2. Turn off the water tap.
3. Detach the drainage connection.
4. Detach the drinking water connection.
5. Loosen any screws fastening the appliance to cabinet parts.
6. Remove the base panel if fitted.
7. Pull the appliance out carefully, along with the hose behind it.

19.2 Protect appliance from frost

If there is a risk of frost where the appliance will be standing, e.g. in a holiday home, empty the appliance completely.

- Empty the appliance.
  → *"Transporting the appliance", Page 44*

19.3 Transporting the appliance

To avoid damage to the appliance, empty it before transporting.

Note: Always transport the appliance upright to prevent residual water getting into the machine's controls and damaging the appliance.

1. Remove tableware from the appliance.
2. Secure loose parts.
3. Turn on the water tap.
4. Switch on the appliance.
   →*Page 29*
5. Select the programme with the highest temperature.
   → *"Programmes", Page 15*
6. Start the programme. →*Page 29*
7. To drain the appliance, terminate the programme after approx. 4 minutes.
   → *"Terminate programme", Page 30*
8. Switch off the appliance.
   →*Page 30*
9. Turn off the tap.
10. To empty the residual water out of the appliance, detach the supply hose and let the water drain out.

19.4 Disposing of old appliance

Valuable raw materials can be reused by recycling.

⚠ **WARNING**

Risk of harm to health!

Children can lock themselves in the appliance, thereby putting their lives at risk.

- With redundant appliances, unplug the power cord. Then cut through the cord and damage the lock on the appliance door beyond repair so that the appliance door will no longer close.

1. Unplug the appliance from the mains.
2. Cut through the power cord.
3. Dispose of the appliance in an environmentally friendly manner. Information about current disposal methods are available from your specialist dealer or local authority.

This appliance is labelled in accordance with European Directive 2012/19/EU concerning used electrical and electronic appliances (waste electrical and electronic equipment - WEEE). The guideline determines the framework for the return and recycling of used appliances as applicable throughout the EU.

20 Customer Service

Function-relevant genuine spare parts according to the corresponding Ecodesign Directive can be obtained from Customer Service for a period of at least 10 years from the date on which your appliance was placed on the market within the European Economic Area.

Furthermore, our Customer Service will continue to provide you with other function-relevant and storable genuine spare parts for up to 15 years from the date on which your appliance was placed on the market. For more information, please contact our Customer Service team.

Note: Under the terms of the manufacturer's warranty the use of Customer Service is free of charge.

Detailed information about the warranty period and the warranty conditions in your country is available via the QR code on the enclosed document on service contacts and warranty conditions, from our customer service or on our website.
You can find the contact details for our customer service via the QR code on the enclosed document on service contacts and warranty conditions or on our website.

20.1 Product number (E-Nr.), production number (FD) and consecutive numbering (Z-Nr.)

If you contact Customer Service, you will require the product number (E-Nr.), the production number (FD) and the consecutive numbering (Z-Nr.), which you can find on the appliance's rating plate.
The rating plate is located inside the appliance door.
→ *"Familiarising yourself with your appliance", Page 12*
Make a note of your appliance's details and the Customer Service telephone number to find them again quickly.

21 Technical specifications

Weight	Max.: 60 kg
Voltage	220 - 240 V, 50 Hz or 60 Hz
Power rating	2000 - 2400 W
Fuse	10 - 16 A
Water pressure	▪ min. 50 kPa (0.5 bar) ▪ max. 1000 kPa (10 bar)
Inlet rate	Min. 10 l/min
Water temperature	Cold water. Hot water max.: 60 °C
Capacity	12 place settings

More information about your model can be found online at *https://eprel.ec.europa.eu/qr/2592275*[1].
This web address is linked to the official EU EPREL product database.

21.1 Information regarding Free and Open Source Software

This product includes software components that are licensed by the

[1] Only applies to countries in the European Economic Area

copyright holders as free software or open source software.
The applicable licence information is stored on your home appliance. You can also access the applicable licence information via your Home Connect app: "Profile -> Legal information -> Licence Information".[1]
You can also download the licence information on the brand product website. (Please search on the product website for your appliance model and additional documents). Alternatively, you can request the relevant information from oss-request@bshg.com or BSH Hausgeräte GmbH, Carl-Wery-Str. 34, 81739 Munich, Germany.
The relevant source code will be made available on request.
Please send your request to oss-request@bshg.com or BSH Hausgeräte GmbH, Carl-Wery-Str.34, 81739 Munich, Germany.
Subject: „OSSREQUEST“
The cost of performing your request will be charged to you. This offer is valid for three years from the date of purchase or at least as long as we offer support and spare parts for the relevant appliance.

22 Declaration of Conformity

BSH Hausgeräte GmbH hereby declares that the appliance with Home Connect functionality conforms to the essential requirements and other relevant provisions of Directive 2014/53/EU.
A detailed RED Declaration of Conformity can be found online at *www.bosch-home.com* among the additional documents on the product page for your appliance.

CE

Hereby, BSH Hausgeräte GmbH declares that the appliance with Home Connect functionality is in compliance with relevant statutory requirements.[2]
A detailed Declaration of Conformity can be found online at *www.bosch-home.co.uk* among the additional documents on the product page for your appliance.[2]

UK CA

2.4 GHz band (2400–2483.5 MHz): Max. 100 mW
5-GHz band (5150–5350 MHz + 5470–5725 MHz): max. 180 mW

BE	BG	CZ	DK	DE	EE	IE	EL	ES
FR	HR	IT	CY	LI	LV	LT	LU	HU
MT	NL	AT	PL	PT	RO	SI	SK	FI

[1] Depending on the appliance specifications
[2] Only applies to Great Britain

SE	NO	CH	TR	IS	UK (NI)
5 GHz WLAN (Wi-Fi): For indoor use only.					

AL	BA	MD	ME	MK	RS	UK	UA
5 GHz WLAN (Wi-Fi): For indoor use only.							

22.1 Statement of Compliance for Great Britain

The full Statement of Compliance according to the Product Security and Telecommunications Infrastructure (Security Requirements for Relevant Connectable Products) Regulations 2023 can be found online at www.bosch-home.co.uk among the additional documents on the product page for your appliance.

Product type
This statement of compliance covers the products described in this information for use whose model identifier group is seen on the title page. The full model identifier is made up of the characters before the slash in the product number (E no.) which can be found on the rating plate. Alternatively, you can also find the model identifier in the first line of the UK Energy Label.

Name and address of manufacturer
BSH Hausgeräte GmbH, Carl-Wery-Strasse 34, 81739 München, Germany
This statement of compliance is prepared by the manufacturer.

The manufacturer, BSH Hausgeräte GmbH deems that it has complied with

- provision 5.1-1 of ETSI EN 303 645 v2.1.1 and, where relevant, provision 5.1-2 of ETSI EN 303 645 v2.1.1;
- provision 5.2-1 of ETSI EN 303 645 v2.1.1;
- provision 5.3-13 of ETSI EN 303 645 v2.1.1.

Support period
BSH Hausgeräte GmbH will provide security updates that are necessary to maintain the main functions free of charge until at least 28/02/2034.

Bosch Home Connect App

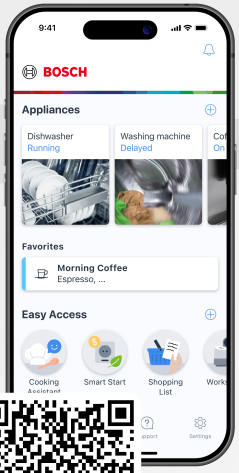

Connect your home appliance today and enjoy the following benefits:

- **Targeted appliance care: take advantage of care tips, updates and status checks via app to make your appliance last longer.**
- **Ensure your appliance performs at its best: get the best possible cleaning and drying results with tips for settings and extra programmes in the app.**
- **Smart operation: start and control your appliance no matter where you are. Automatic Smart Start options, tailored to your specific needs.**

Need some help? You can find it here.

Expert advice on your Bosch home appliances, help with problems or repairs by professionals from Bosch.

Discover all the different ways Bosch can assist you:
www.bosch-home.com/service

The contact details of all countries are listed in the attached service directory.

BSH Hausgeräte GmbH
Carl-Wery-Straße 34
81739 München, GERMANY
www.bosch-home.com

A Bosch Company

Valid within Great Britain:
Imported to Great Britain by
BSH Home Appliances Ltd.
Grand Union House
Old Wolverton Road
Wolverton, Milton Keynes
MK12 5PT
United Kingdom

9002060212 (060708) 642 E4
en