EdenPURE®

UV IcePRO

Instruction Manual

Model: BS-002

Please be sure to read all instructions
before using this appliance.

Table of Contents

Important Safety Precautions ..... Pages 1-2

Parts list ..... Page 3

Cleaning and Maintenance..... Page 4

Adding Water/Drainage ..... Page 5

Before Using/Power Supply Risk..... Page 6

How to Make Ice..... Page 7

Troubleshooting..... Page 8

Technical Parameters and Electrical Schematic..... Page 9

Important Safety Precautions

This appliance is for household use only. When using household electrical appliances, basic safety regulations must be followed to reduce the chance of fire, electric shock and damage to people or property. Please read the following safety tips carefully before using the appliance.

WARNING:

- ❑ This appliance can be used by children over 8 years old and people with reduced physical, sensory or mental capabilities or lack of experience and knowledge if they are being supervised.
- ❑ Children should not play with the appliance. Cleaning and user maintenance should not be made by children without supervision. When children are around, adult supervision is required.
- ❑ Use the correct power outlet and ensure that the power plug is fully inserted into the outlet.
- ❑ If the supply cord is damaged, do not use or operate this machine. Contact customer service at **1-800-225-6595** or **custserv@edenpure.com**.
- ❑ We do not recommend the use of extension cords which may cause overheating or fire.
- ❑ When in use, please do not place the power cord on top of rugs or heat-insulating objects. Do not cover the power cord. Keep the power cord away from walking paths and do not immerse it in water.
- ❑ Do not use combustible items near the machine to avoid the risk of fire.
- ❑ Do not use mechanical devices or other methods to accelerate the de-icing process except those recommended by the manufacturer.
- ❑ Do not damage the refrigerant circuit.
- ❑ Keep ventilation openings in the equipment housing or built-in structure free from obstruction.
- ❑ Do not use electrical appliances in the food storage compartment of the unit unless they are recommended by the manufacturer.
- ❑ Please do not tip over the ice machine. If it tips over, place the machine upright for 2 hours <u>before</u> turning it on.

Important Safety Precautions

DANGER:
When the ice machine is in use or making ice, please do not touch the evaporator and do not open the control panel on the top of the machine to avoid injury.

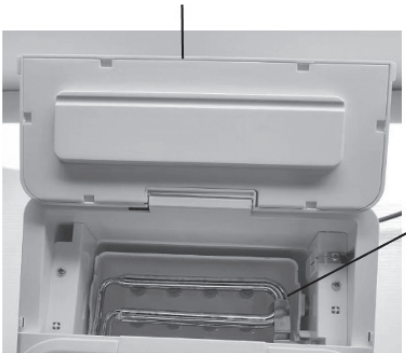

Fire/flammable material risk. Avoid igniting flammable materials that may cause a fire.

- ❑ The thermal insulation material of the box is EPS flammable, so keep it away from the fire and do not burn it. Dispose of it in the trash.
- ❑ The refrigerant of this product is flammable. Pay attention to make sure there's nothing flammable around it and that it has proper ventilation during maintenance.
- ❑ This appliance contains refrigerants under high pressure and maintenance of the refrigeration system should be carried out by professionals.
- ❑ Do not store explosive items, such as aerosol cans containing flammable propellants, in or around this appliance.
- ❑ Do not use flammable liquids to clean the ice machine; this may cause a fire or explosion.
- ❑ Please handle in accordance with local regulations regarding the handling of flammable refrigerants and flammable gases in the equipment.
- ❑ Unplug the power cord from the outlet before cleaning or servicing.

Parts List

Ice Scoop: Used to scoop the ice out of the machine

Ice Basket: Used to store ice cubes.

1. **Infrared detection of ice full sensor**: When the ice basket is full, the “ICE FULL” light on the display panel will turn on.
2. **Upper Cover**: Has a transparent window so you can see inside.
3. **Air Outlet**: To ensure smooth airflow, the air outlet net should be at least 6” away from any other object.
4. **Drain Plug**: Pull it out to drain the water in the water tank at the bottom of the machine.
5. **The water limit line**: Only fill water to the “MAX” line.
6. **Control Panel**:
   - **A.** “S”& “L”buttons: For small cubes select “S”. For large cubes select “L”.
   - **B.** “ICE FULL”button: Will turn on when the ice bucket is full.
   - **C.** “ADD WATER”button: Will turn on when you need to add water.
   - **D.** “SELECT”button: Press before selecting the “S” or “L” button.
   - **E.** “ON/OFF” button: Power switch button.
7. UV-C Light

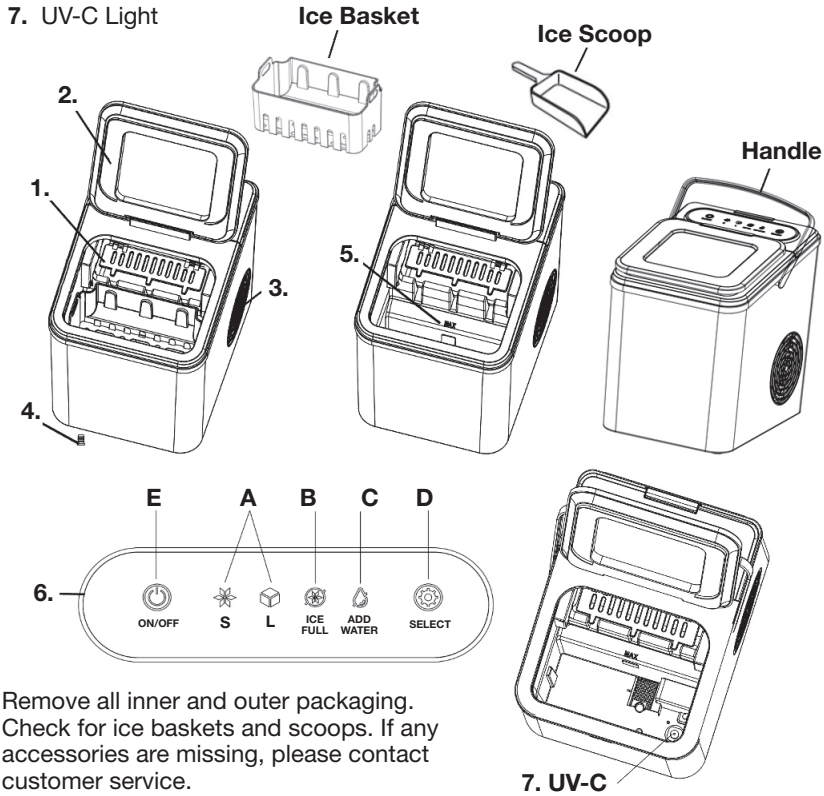

Remove all inner and outer packaging. Check for ice baskets and scoops. If any accessories are missing, please contact customer service.

Cleaning and Maintenance

Before using this ice machine, it is strongly recommended that you thoroughly clean the entire machine following the instructions below:

1. Remove the ice basket and ice scoop and scrub them in warm water with a mild detergent.

2. Add warm water or diluted detergent to the inside of the machine and scrub the inside of the machine with a soft cloth.

3. Pull up on the side plastic tabs of the control panel, open the control panel, and clean the evaporator column with warm water. You can also use a soft fine-bristle brush or soft cloth to clean the evaporator and ice water box.

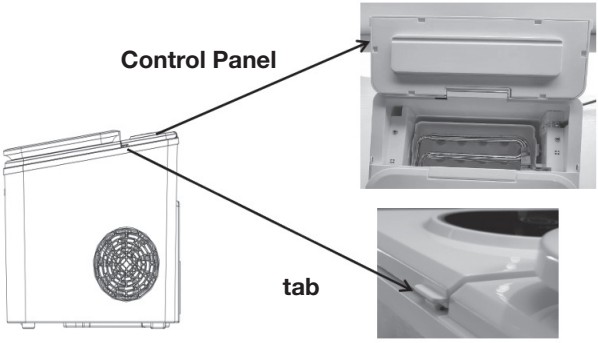

4. Open the drain plug at the bottom of the machine and drain the water from the water tank.

5. After draining is complete, reset the drain plug.

6. Use the machine's automatic self-clean function to clean the machine.

7. After the machine is cleaned, use drinking water to make ice. Make 2 batches of ice and throw them away. Then use any batches after that as needed.

The exterior of the machine should be scrubbed frequently with diluted detergent and warm water.

It is recommended that you change the water every 24 hours to keep the water clean.

If the ice machine is not used for a long time, please drain the remaining water in the water tank and wipe the tank dry with a clean cloth.

Warning: Cleaning and user maintenance must not be carried out by unsupervised children.

Warning: Before cleaning, turn the power off and disconnect the power cord from the wall outlet.

Machine Auto Self-Clean

To activate the Auto Self-Clean Mode, touch and hold the "ON/OFF" button for 3 seconds until the S and L indicators flash alternately, then release it and the machine will enter automatic cleaning mode. One cleaning cycle: about one minute; this cycle will repeat continuously for around 15 minutes.

In the self-cleaning mode, manually press the "ON/OFF" key to turn off the self-cleaning program if you want to end it before 15 minutes.

Adding Water / Drainage

Add Water

Open the top cover, remove the ice basket, add water to the water tank of the machine to keep the water level below the highest water level marked “ MAX “ and close the top cover.

Before adding water, please make sure the silicone drain plug at the bottom of the machine is installed.

Warning: Fill with drinking water only.

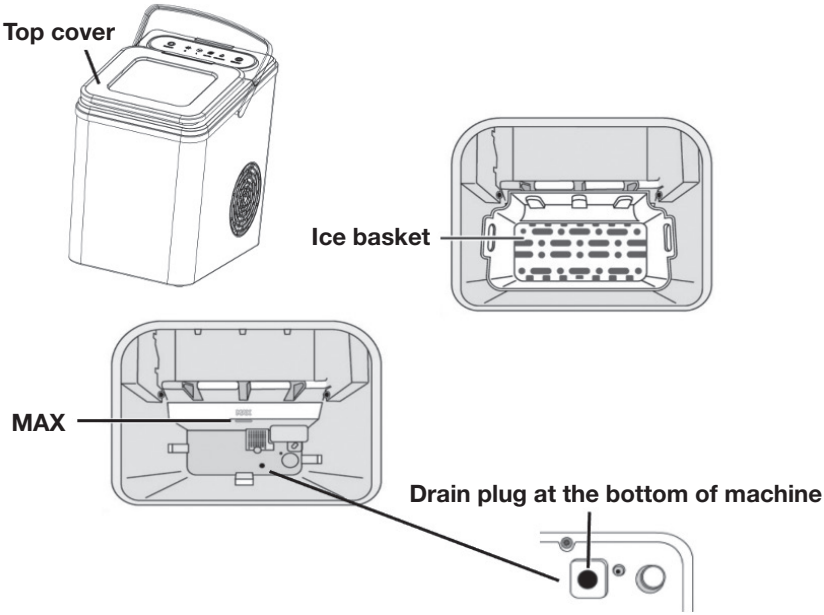

Drainage

Prepare a water container first, then unplug the silicone drain plug at the bottom of the machine to drain the water from the water tank.

After draining the water,
put the drain plug back in.

Before Using / Power Supply Risk

Before Using

1. Before the first use, please remove all inner and outer packaging. Check whether there is an ice basket, ice scoop, and a handle etc. If any accessories are missing, please contact customer service.

2. Place the ice maker out of direct sunlight and away from heat sources and radiation. Place the ice maker horizontally and ensure that there is at least 6”of space on both sides and the back.

3. The ice machine should be placed in a location that has a suitable electrical outlet.

4. If you move the ice maker from one temperature area to another, wait a few hours for the ice maker to reach room temperature before turning it on.

5. Install the handle on the sides of the machine before use.

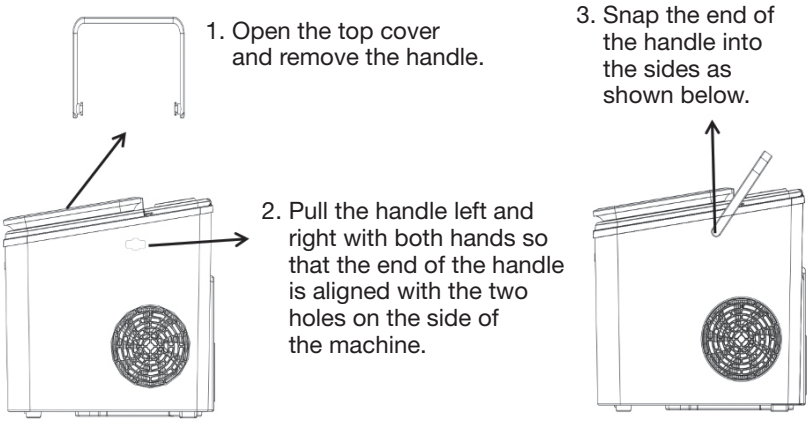

Power Supply Risk

For your safety, this ice machine must be reliably grounded. This machine requires a standard 120V~60Hz grounded power supply.

Improper use of the grounding wire may result in the risk of electric shock. If the power cord is damaged, please contact customer service at 1-800-225-6595 or custserv@edenpure.com.

How to Make Ice

1. Plug in and turn on the power.

2. Fill the machine with water, keeping the water below the MAX Line.

3. Touch and press the “ON/OFF”button on the control panel to start making ice.

4. Touch and press “SELECT”, then press “S” or “L” to select the size of ice cubes. After selection, the machine enters the ice making mode and will start to make ice.

5. Touch and press “ON/OFF” to end the ice making mode.

- ❑ If the room temperature is below 59° F, it is recommended that you select small ice to prevent continuous ice making.
- ❑ Each ice making session lasts from 6 to 12 minutes, depending on the size of the ice cubes and the room temperature.
- ❑ The size of the ice cubes is also related to the water temperature and ambient temperature.
- ❑ Check the water level in the water tank frequently. If the water pump cannot pump out water, the ice maker will automatically stop and the “ ADD WATER” light will turn on. Press the “ON/OFF” button to turn the machine off, fill the water tank with water and press the “ON/OFF” button again to restart the machine.
- ❑ If the ice basket is full of ice, the machine will automatically stop making ice and the “ICE FULL” indicator light will turn on; When you use an ice scoop to remove ice from the ice basket and the position of the ice is lower than the infrared detection position, the machine will start to make ice again.

The UVC light always be lit while ice is being made.

Troubleshooting

Problem	Possible Causes	Solution
"ADD WATER" indicator light on	The machine is out of water	Turn the unit off, add water, and press the "ON/OFF" button to restart ice making
	The filter at the bottom of the water tank is blocked	Clean the filter
The "ICE FULL" indicator light on	Too much ice in the ice basket	Remove the ice cubes from the ice basket.
	The ice full sensor is always on when there is no ice	Press and hold the "SELECT" button for more than 5 seconds to force the ice machine to start and run 10 cycles. If that doesn't solve the problem contact customer service.
The "ICE FULL" indicator blinking	An ice cube is stuck	Check if the ice cubes are stuck on the ice shovel, and remove the ice cubes. Otherwise, contact customer service.
Ice cubes stuck together	The ice making cycle time is taking too long	Stop making ice, wait for the ice cubes to melt, then restart ice making and select small ice
	The water temperature in the water tank is too low	Replace the water in the water tank. The water temperature should be between 46˚ F and 95˚ F .
The ice is full but the indicator light is off	The machine is located in a location where there is a lot of sunlight, which affects infrared detection	Move to a darker area
The ice making process is normal, but no ice is produced	The ambient temperature or water temperature is too high	Please make ice when the ambient room temperature is below 90˚ F and make sure to add cold water into the water tank.
	Refrigeration system is leaking	Contact customer service
	Refrigeration system is blocked	Contact customer service

Technical Specifications

Model	BS-002
Security Level	I
Power supply	120V / 60 Hz
Maximum current	2.0 A
Maximum power	165 W
Refrigerant / liquid amount	R600a / 20g
Foaming agent	C_5H_{12}
Insulation	EPS
Net weight	14.3 lbs.
Gross Weight	16 lbs.
Ice Shape	Bullet
Ice Production	26.4 lb. / day
Water Tank Capacity	.4 gallons
Ice Basket Capacity	1.3 lb.
Shell	ABS
Machine Size (width X depth X height)	9.134 X 12.087 X 12.087 inches

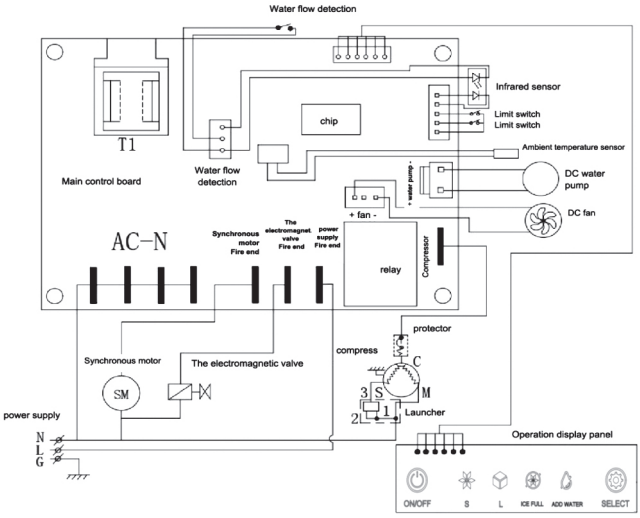

In the event your unit does not appear to be working properly or the trouble lights start blinking, contact customer service at **1-800-225-6595** or **custserv@edenpure.com**.

To place an order call **1-800-360-1070**
or go to **www.edenpure.com.**

EdenPURE®
7584 Whipple Avenue NW
N. Canton, OH 44720

©2025 EdenPURE® I-5920 BR12386R-1