THOR KITCHEN

GORDON RAMSAY COLLECTION

USE + CARE MANUAL

GORDON RAMSAY COLLECTION BY THOR KITCHEN 15 INCH BUILT-IN ICE MAKER

RIM1501



REV.042026

USE & CARE MANUAL

GORDON RAMSAY BY THOR KITCHEN 15 INCH BUILT-IN ICE MAKER

RIM1501

THOR KITCHEN®

TABLE OF CONTENTS

IMPORTANT SAFETY INSTRUCTIONS 2-4

1.1 Ice maker Safety 2

1.2 Important Safeguards 3-4

TECHNICAL INFORMATION 5-6

2.1 Component Locations 6

OPERATION 7-13

3.1 Final Check List Before Operation 7

3.2 Operating Method 7-8

3.3 How The Machine Makes Ice 8

3.4 How The Machine Uses The Water 9

3.5 How The Pump Out Water Drain System Operates 9-10

3.6 Normal Sounds 11

3.7 Preparing The Ice Maker For Long Storage 11

3.8 Control Panel 12

3.9 Indicator Notification. 12

3.10 System Fault Notification 13

3.11 Major Functions 13

CLEANING AND MAINTENANCE. 14-18

4.1 Exterior Cleaning 14

4.2 Interior Cleaning 15

4.3 Condenser Cleaning 15

4.4 Water Distribution Tube Cleaning 16

4.5 Ice-making System Cleaning 16-17

4.6 Extended Periods Of Non-Use. 17

4.7 Recommissioning The Unit. 18

4.8 Starting Up The Unit. 18

TROUBLESHOOTING. 19-20

WARRANYY. 21

IMPORTANT SAFETY INSTRUCTIONS

1.1 Ice maker Safety

Your safety and the safety of others are very important.

We have provided many important safety messages in this manual and on your appliance. Always read and obey all safety messages.



This is the Safety Alert Symbol. This symbol alerts you to potential hazards that can injure or kill you and others. All safety messages will follow the Safety Alert Symbol and either the words"DANGER", "WARNING" OR "CAUTION".



DANGER

DANGER means that failure to heed this safety statement may result in severe personal injury or death.



WARNING

WARNING means that failure to heed this safety statement may result in extensive product damage, serious personal injury or death.



CAUTION

CAUTION means that failure to heed this safety statement may result in minor or moderate personal injury, or property or equipment damage.

All safety messages will alert you to what the potential hazard is, tell you how to reduce the chance of injury, and let you know what can happen if the instructions are not followed.

IMPORTANT SAFETY INSTRUCTIONS

WARNING: To reduce the risk of fire, electric shock or injury when using your ice maker, follows these basic precautions:

- Plug into grounded 3-prong outlet.
- Do not remove grounding prong.
- Do not use an adapter.
- Do not use an extension cord.
- Disconnect power before cleaning.
- Disconnect power before servicing.
- Replace all panels before operating.
- Use two or more people to move & install ice maker.

SAVE THESE INSTRUCTIONS

IMPORTANT SAFETY INSTRUCTIONS

1.2 Important Safeguards



Before the ice maker is used, it must be properly positioned and installed as described in this manual, so read the manual carefully. We strongly recommend that you have a professional install your new machine. The warranty may be affected or voided by an incorrect installation. To reduce the risk of fire, electrical shock or injury when using the ice maker, follow basic precautions, including the following:



DANGER

- Plug into a grounded 3-prong outlet; do not remove grounding prong, do not use an adapter, and do not use an extension cord.
- It is recommended that a separate circuit, serving only your ice maker, be provided. Use receptacles that cannot be turned off by a switch or pull chain.
- Do not connect or disconnect the electric plug when your hands are wet.
- Never unplug the ice maker by pulling on the power cord. Always grip the plug firmly and pull straight out from the outlet.
- Never clean ice maker parts with flammable fluids. Do not store or use gasoline or other flammable vapors and liquids in the vicinity of this or any other appliances. The fumes can create a fire hazard or explosion.
- Before proceeding with cleaning and maintenance operations, make sure the power line of the unit is disconnected and the water line is shut off.
- Before operating, pull all panels back into place.
- Never allow children to operate, play with or crawl inside the ice maker.
- Do not touch the evaporator with your hand when the machine is operating.
- Unplug the ice maker or disconnect power before cleaning or servicing. Failure to do so can result in electrical shock or death.
- Do not attempt to repair or replace any part of your ice maker unless it is specifically recommended in this manual. All other servicing should be referred to a qualified technician.



WARNING

- Use two or more people to move and install the ice maker. Failure to do so can result in back or other injury.
- To ensure proper ventilation for your ice maker, the front of the unit must be completely unobstructed. Choose a well-ventilated area with temperatures above 50°F (10°C) and below 100°F (38°C).
- The ice maker should not be located next to ovens, grills or other sources of high heat.
- The ice maker must be installed with all electrical and water connections in accordance with state and local codes. A standard electrical supply (115 V AC, 60 Hz, 15 A), properly grounded in accordance with the National Electrical Code and local codes and ordinances, is required.
- Do not kink or pinch the power supply cord between the ice maker and cabinet.

IMPORTANT SAFETY INSTRUCTIONS

- The fuse (or circuit breaker) size should be 15 amperes.
- It is important for the ice maker to be leveled in order to work properly. Otherwise water may not flow properly through the evaporator (ice mold). The ice production will be less than normal. You may need to make several adjustments to level it.
- All installations must be in accordance with local plumbing code requirements.
- Make certain that hoses are not pinched, kinked or damaged during installation.
- Check for leaks after water line is connected.
- Although the unit has been tested and cleaned at the factory, due to long-term transit and storage, the first batch of cubes must be discarded.
- Remove the packing materials and clean the ice maker before using.
- Turn on the water supply tap before switching on the ice maker. Never turn the water supply tap off when the ice maker is working.
- Except to take ice from the unit, keep the door closed in order to reduce ice melting and to promote proper ice formation.
- If the ice maker will not be used for a long time, before the next use it must be thoroughly cleaned. Follow carefully any instructions provided for cleaning or use of sanitizing solution. Do not leave any solution inside the ice maker after cleaning.
- DO NOT use solvent-based cleaning agents or abrasives on the interior. These cleaners may transmit taste to the ice cubes, or damage or discolor the interior.
- The ice machine cleaner contains acids. Do not use or mix with any other solvent-based cleaning products. Use rubber gloves to protect hands. Carefully read the safety instructions on the container of the ice machine cleaner.
- Do not use the apparatus other than for its intended purpose.

SAVE THESE INSTRUCTIONS

Electrical Connection

Do not, under any circumstances, cut or remove the third (ground prong from the power cord. For personal safety, this appliance must be properly grounded. The power cord of this appliance is equipped with a 3-prong grounding plug that mates with a standard 3-prong grounding wall outlet to minimize the possibility of electric shock hazard from the appliance. Have the wall outlet and circuit checked by a qualified electrician to make sure the outlet is properly grounded. When a standard 2-prong wall outlet is encountered, it is your responsibility and obligation to have it replaced with a properly grounded 3-prong wall outlet. The ice maker should always be plugged into its own individual electrical outlet which has a voltage rating that matches the rating label on the appliance. This provides the best performance and also prevents overloading house wiring circuits which could cause a fire hazard from overheated wires. Never unplug your ice maker by pulling on the power cord. Always grip the plug firmly and pull straight out from the outlet. Repair or replace immediately all power cords that have become frayed or otherwise damaged. Do not use a cord that shows cracks or abrasion damage along its length or at either end. When moving the ice maker, be careful not to damage the power cord.

Extension Cord

Because of potential safety hazards under certain conditions, it is strongly recommended that you do not use an extension cord with this ice maker.

TECHNICAL INFORMATION

Model:	RIM1501
Electrical power:	115VAC ~ 60Hz
Power consumption:	10.6 kWh/100 lbs
Ice-making /-harvest rated current:	2.5A/1.9A
Refrigerant:	R290 1.87 oz
High/Low side pressure:	286 psig/110 psig
Width x depth x height:	14.6" x 24.4" x 33.6"
Unit weight:	79 lbs
Maximum ice storage:	25 lbs
Ice-making capacity:	58 lbs/day*
Ice shape:	Cube
Ice cube dimensions:	7/8″ x 7/8″ x 7/8″

The technical data and performance index listed above should be used for reference only. They are subject to change.

*The actual quantity of ice produced per day can vary with environment and water conditions.

TECHNICAL INFORMATION

2.1 Component Locations

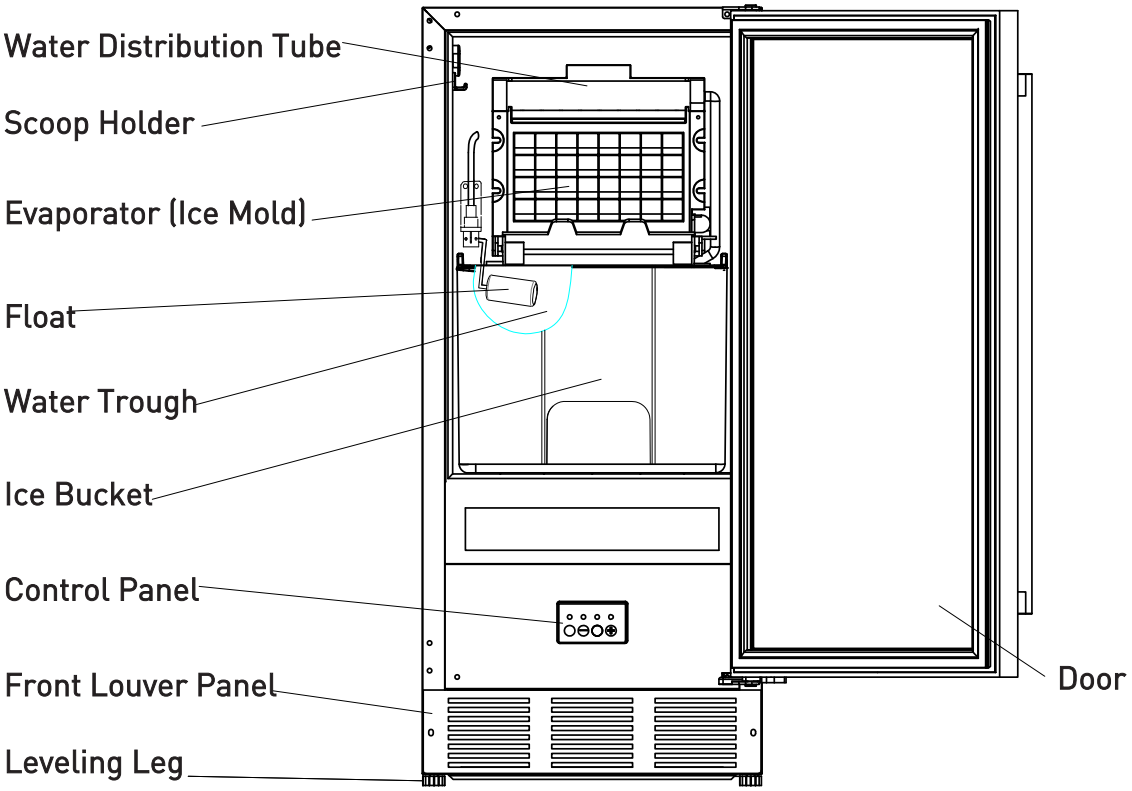

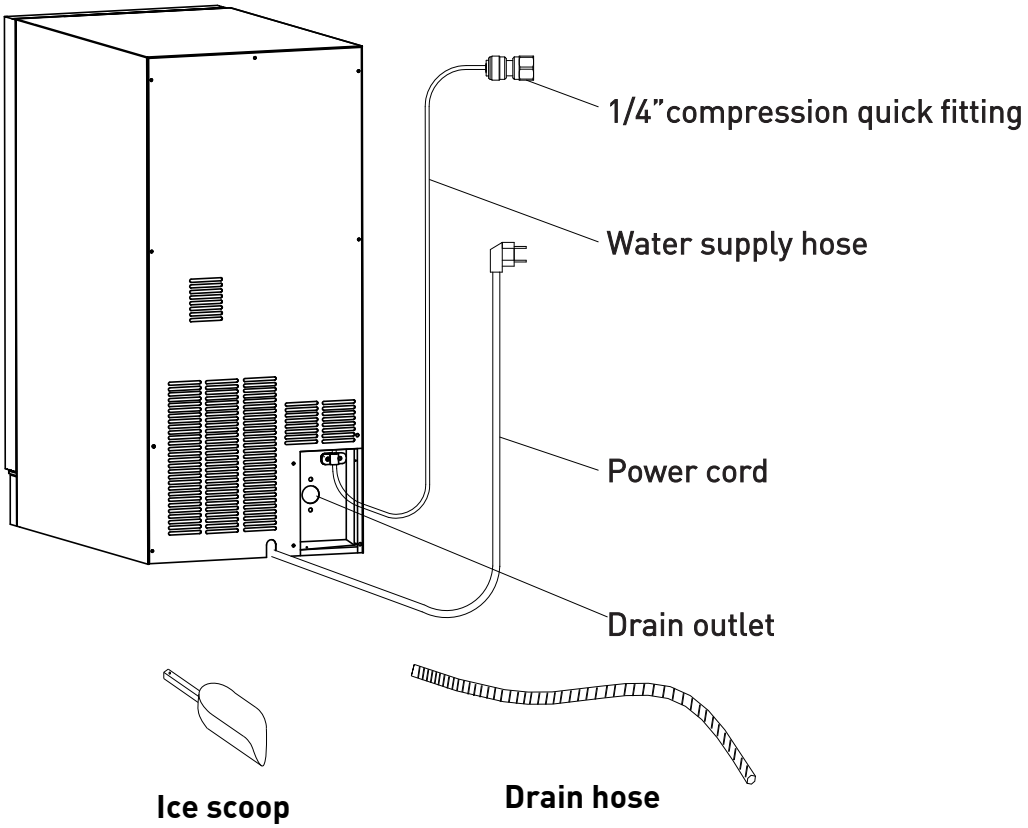

OPERATION

3.1 Final Check List Before Operation

1. Have all packing materials and tape been removed from the interior and exterior of the ice maker?
2. Did you clean the ice storage bin?
3. Have the installation instructions been followed, including connecting the machine to water and electricity?
4. Has the machine been leveled?
5. Is the ice maker in a site where the ambient temperature is between 50°F (10°C) and 100°F (38°C) and the water temperature between 50°F (10°C) and 90°F (32°C) all year- round?
6. Has the water supply pressure been checked to ensure a minimum of 15 psig with a static pressure not to exceed 80 psig?
7. Is there a clearance of at least 4" (102mm) at the rear, and 1" (25 mm) at top and sides for proper air circulation?
8. Has the power supply voltage been checked or tested against the nameplate rating?And has proper grounding been installed in the ice maker?
9. Is the ice maker plugged in?
10. Have you turned on the main water supply and tap?
11. Have you checked for leaks at all water supply connections?

3.2 Operating Method

1. Turn on the water tap, let the water trough fill, then press the ON/OFF button on the front panel. The ice maker will start working automatically.

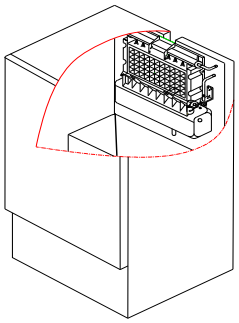

Ice making stage

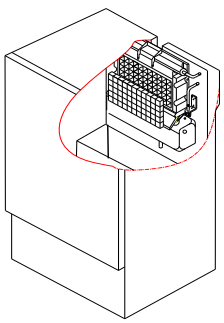

Ice harvest stage

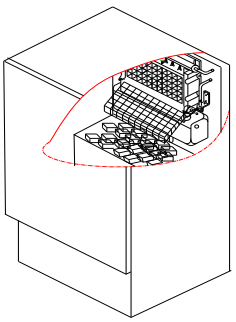

Bin full stage

2. After 3 minutes, the machine will automatically go to the ice-making stage, and the sound of water flowing will be heard.
3. When the batch of ice has been fully formed, ice will automatically be harvested to the ice storage bin.

4. When the ice storage bin is full, the sheet of cubes will not fall completely and will hold the bin-full probe open. The machine stops making ice automatically.
5. The unit will start making ice again after the ice cubes are removed. Then the bin-full probe swings back to operating position.
6. Bin light (If present): The bin light will be controlled by magnetic reed switch that has been installed in the inner of the door. It can be Turn On or Off automatically with the door opening or closing.
7. Pump Water Drain system (If use): as soon as the ice melt water or other surplus overflow water into the water reservoir reaches the maximum level, the water lever switch close and transmit a low voltage current to PC board. The PC board energizes the water drain pump for 20 seconds pumping out most of the water contained into the water reservoir.

IMPORTANT:

- *Although the unit has been tested and cleaned at the factory, due to longterm transit and storage, the first batch of cubes must be discarded.*
- *Never turn the water supply tap off when the ice maker is working.*
- *Never touch evaporator when unit is running!*
- *Except to take ice from the unit, keep the door closed to reduce melting and insure proper ice formation.*

3.3 How The Machine Makes Ice

Set the ON/OFF button to the ON position. The machine will automatically go to the ice making stage. There are two distinct cycles: ice freeze and harvest. The freeze cycle happens when water flows to the evaporator surface. The harvest cycle is when the ice is released and water enters the machine. A complete cycle takes about 20 minutes, but it depends on temperature and operating conditions.

Freeze: During the freeze cycle the compressor is pumping refrigerant, the fan motor is blowing air, and the water pump is circulating water. When the batch of ice has been fully formed, the ice maker stops the freeze cycle and the harvest cycle begins.

Harvest: During the harvest cycle the compressor is still operating, but the water pump has stopped. The hot gas valve opens, diverting hot refrigerant gas into the evaporator. The hot refrigerant gas warms the evaporator, causing the cubes to slide as a unit off the evaporator and into the storage bin. The freeze cycle will restart when all the cubes have been harvested.

OPERATION

3.4 How The Machine Uses The Water

The ice maker begins with a fixed charge of water that is contained in the water trough. As the water flows to the freezing evaporator surface, the portion of water that does not contain mineral impurities freezes and sticks to the ice cube molds. The water containing impurities falls back into the water trough. During the ice making process, fresh water enters into the water trough continuously as the water in the trough freezes continuously in the evaporator.

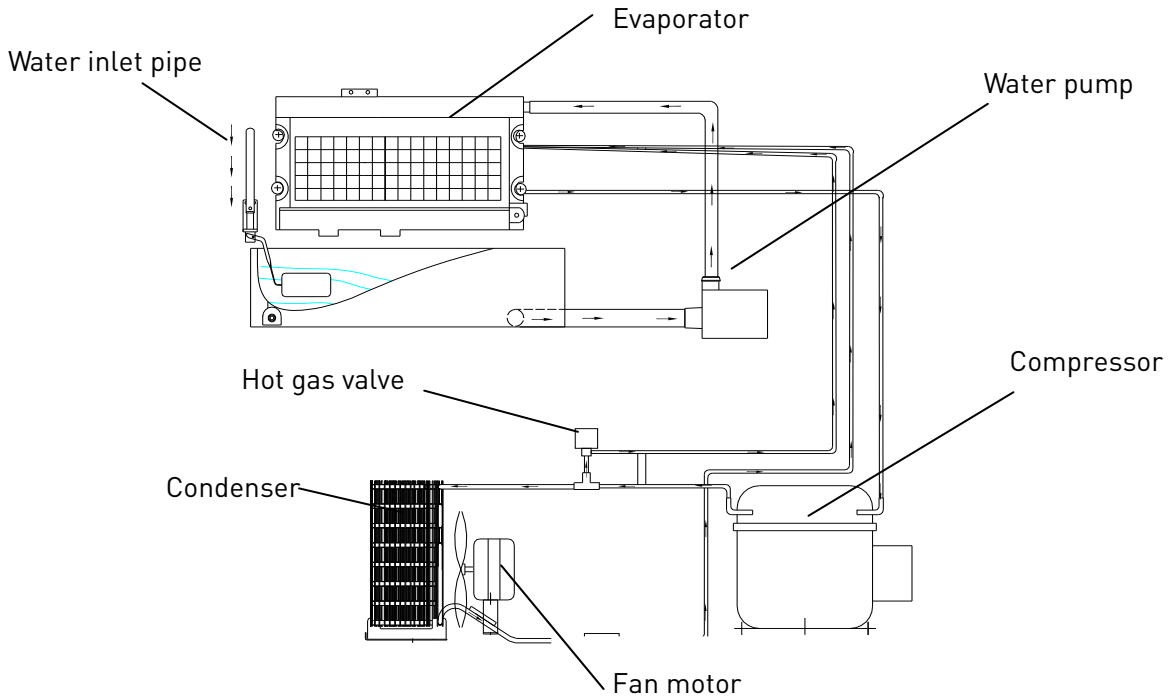

3.5 How The Pump Out Water Drain System Operates

The components of the Pump Out Water Drain System are:

- Water reservoir
- PC Board & Water level switch 1, 2
- Water Drain Pump

OPERATION



- All water coming from the overflow, and from the melted ice is collected inside the water reservoir.
- As soon as the water into the water reservoir reches the maximum level, the water lever switch 1 close, transmitting a low voltage current to PC Board

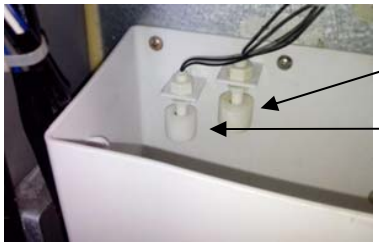

OPERATION



- The PC board activates the water drain pump for 20 seconds pumping out most of the water contained into the water reservoir.
- The water can be pumped out up to 1.5m rise or to 1.5m on horizontal length.

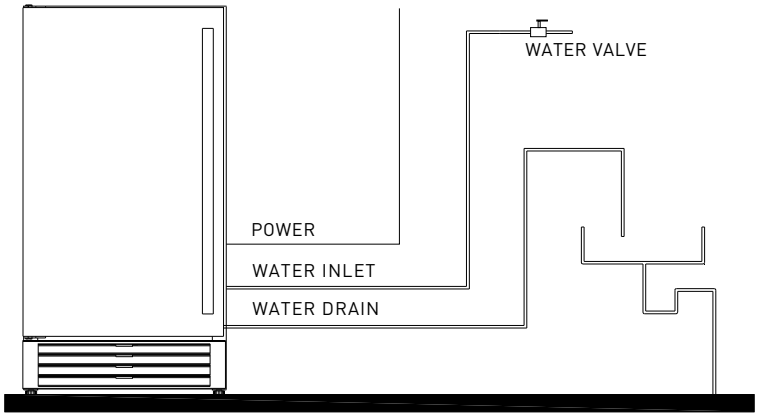

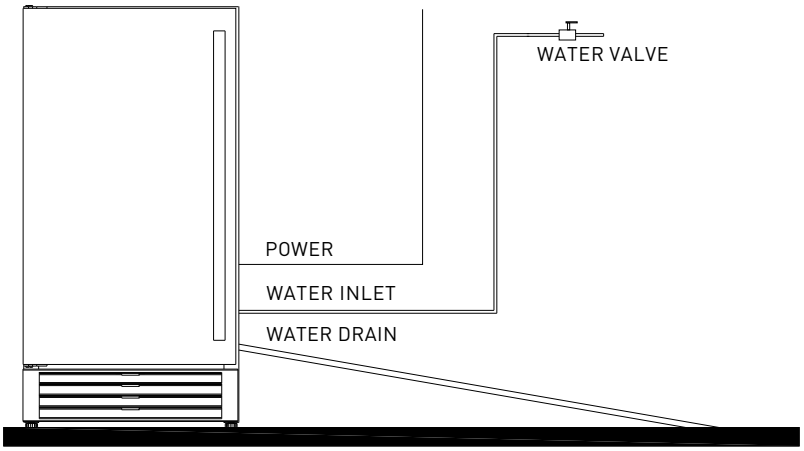

- If the the water lever switch 2 close, transmitting a low voltage current to PC board. The PC board activates the buzzer alarm, informing that the drain pump, water lever switch and drain tube may malfunction.

SCHEMATIC SYSTEM

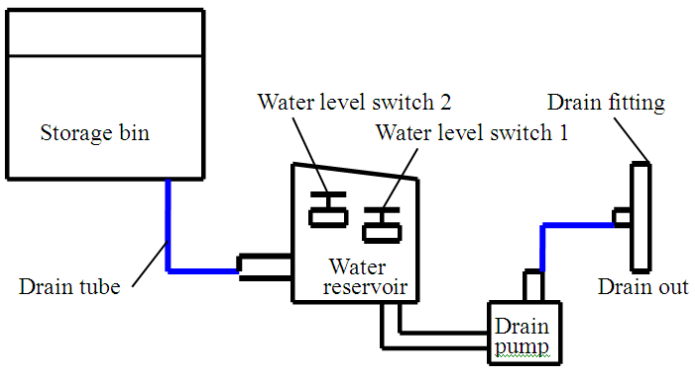

OPERATION

3.6 Normal Sounds

Your new ice maker may make sounds that are not familiar to you. Most of the new sounds are normal. Hard surfaces like the floor and walls can make the sounds louder than they actually are. The following list describes the sounds that might be new to you and what may be causing them.

- Rattling noises may come from the flow of the refrigerant or the water line. Items stored on top of the ice maker can also make noises.
- The high efficiency compressor may make a pulsating or high-pitched sound.
- Water running may make a splashing sound.
- You may hear air being forced over the condenser by the condenser fan.
- During the harvest cycle, you may hear the sound of ice cubes falling into the ice storage bin.

3.7 Preparing The Ice Maker For Long Storage

If the ice maker will not be used for a long time, or is to be moved to another place, it will be necessary to drain the system of water.

1. Shut off the water supply at the main water source.
2. Disconnect the water supply line from the water inlet.
3. Shut off the electric supply at the main electrical power source.
4. Take out the ice storage bin to remove any remaining ice and water. Dry the bin.
5. Pull off the drainage tube of the water trough to drain off all water.
6. Leave the door open to allow for circulation and to prevent mold and mildew.
7. Leave water supply line and power cord disconnected until ready to reuse.

IMPORTANT:

- *Do not touch the power plug when your hands are wet.*
- *Never unplug the unit by pulling on the cord. Grasp the plug and pull out firmly.*

OPERATION

3.8 Control Panel:

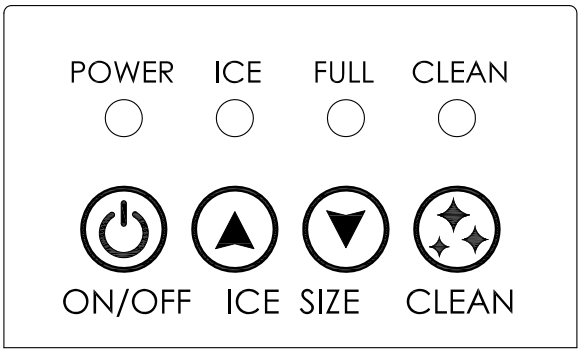

FUNCTION		OPERATING
ON		Press ON to start automatic ice making, the ICE indicator lights. Note: All indicators lights for 3 minutes on initial running, and then switch to ice making automatically.
OFF		Press OFF to turn off and standby.Only POWER indicator lights.
Ice Size Adjustment		Press UP or DOWN to enter Ice Size Adjustment, beeper will sounds when operating. By press UP or DOWN,the ice size setting can be toggle from automatic default 0 position to +4 or -4. Each represents bigger or smaller ice size. CLEAN indicator blinks = +4 CLEAN indicator lights = +3 BIN FULL indicator lights = +2 ICE indicator lights = +1 ALL indicators lights = 0 (default) CLEAN indicator blinks = -1 BIN FULL indicator blinks = -2 ICE indicator blinks = -3 ICE indicator lights = -4 The setting will be saved and then automatically exit after 6 seconds. Note: Ice Size Adjustment not available on Cleaning and Standby.
Cleaning		Press and hold CLEAN for 3 seconds to run the clean program, this program will run for 30 minutes and standby.

3.9 Indicator Notification

POWER lights	Unit is powered on.
ICE lights	Ice making.
ICE blinks	Ice harvesting.
BIN FULL lights	Bin is full, and ice making has stopped.
BIN FULL blinks	Counting down to switch to ice making.
CLEAN lights	The cleaning program is running.
CLEAN blinks	Clean Reminder: ice making system cleaning is required.

OPERATION

3.10 System Fault Notification

When the unit detects an error, indicator flashing. Please provide the error codes when contacting service.

EVP temperature sensor failure	ICE indicator fast blinks
CDN temperature sensor failure	CLEAN indicator fast blinks
High temperature	CLEAN indicator fastest blinks
Ice harvesting failure	ICE and BIN FULL indicators blinks together
Lack of water	BIN FULL and CLEAN indicators blinks together

3.11 Major Functions

1. The operating procedure is completely automatic.
2. When the ice storage bin is full of ice cubes, the machine stops making ice automatically. It starts making ice again after ice cubes are removed.
3. The different colors of the LED display indicate various work modes.
4. A sensitive probe and accurate timer enhance the performance of the ice maker.
5. A compressor protection system is built in.

CLEANING AND MAINTENANCE



CAUTION

If the ice maker is left unused for a long time, before the next use it must be thoroughly cleaned. Follow carefully any instructions provided for cleaning or use of sanitizing solutions. Do not leave any solution inside the ice maker after cleaning.

Periodic cleaning and proper maintenance will ensure efficiency, top performance, and long life. The maintenance intervals listed are based on normal conditions. You may want to shorten the intervals if you have pets, or there are other special considerations.

What shouldn't be done

Never keep anything in the ice storage bin that is not ice: objects like wine and beer bottles are not only unsanitary, but the labels may slip off and plug up the drain.

What parts should be kept clean

There are 5 things to keep clean:

1. The exterior
2. The interior
3. The condenser
4. Water distribution tube
5. The ice-making system



WARNING

Before proceeding with cleaning and maintenance operations, make sure the power line of the unit is disconnected and the water line is shut off.

4.1 Exterior Cleaning

The door and cabinet may be cleaned with a mild detergent and warm water solution such as 1 oz. of dish-washing liquid mixed with 2 gall ons of warm water. Do not use solvent-based or abrasive cleaners. Use a soft sponge and rinse with clean water. Wipe with a soft clean towel to prevent water spotting. Stainless steel can discolor when exposed to chlorine gas and moisture. Clean stainless steel with a mild detergent and warm water solution and a damp cloth. Never use an abrasive cleaning agent.

CLEANING AND MAINTENANCE

4.2 Interior Cleaning

The ice storage bin should be sanitized occasionally. Clean the water trough before the ice maker is used first time and reused after stopping for an extended period of time. It is usually convenient to sanitize the trough after the ice making system has been cleaned, and the ice storage bin is empty.

1. Disconnect the power to the unit.
2. Open the door and take out the removable ice storage bin. With a clean cloth, wipe down the interior of unit and ice bin with a sanitizing solution made of 1 ounce of household bleach or chlorine and 2 gallons of hot (95°F-115°F) water.
3. Pull off the drain hose of the water trough to drain off all water.
4. Rinse thoroughly with clear water.
5. After draining off all water, put back the drain hose of the water trough into the original location.
6. Put the ice storage bin inside the unit.
7. Reconnect power to the unit.

The ice scoop should be washed regularly. Wash it just like any other food container.

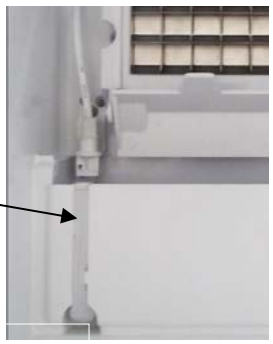

WARNING

DO NOT use solvent-based cleaning agents or abrasives on the interior. These cleaners may transmit taste to the ice cubes and damage or discolor the interior.

4.3 Condenser Cleaning

A dirty or clogged condenser prevents proper airflow, reduces ice making capacity, and causes higher than recommended operating temperatures that may lead to component failure. Have the condenser cleaned at least once every six months.

1. Unplug the ice maker or disconnect power.
2. Gently pull off the lower front louver.
3. Remove dirt and lint from the condenser and the unit compartment with the brush attachment of a vacuum cleaner.
4. Reassemble the lower front louver.
5. Plug in the ice maker or reconnect power.

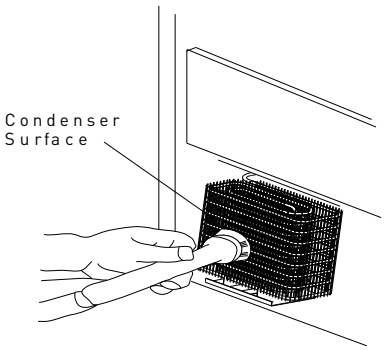

CLEANING AND MAINTENANCE

4.4 Water Distribution Tube Cleaning

When you find the ice cubes are incompletely formed or the output is low, the water distribution tube may be blocked. Turn off the power button, gently take out the water distribution tube, locate the holes in the distribution tube and use a pointed object such as a toothpick to dredge the holes. Then put the water distribution tube back to its original position. If the tube is badly blocked, clean it as follows:

1. Shut off the water supply
2. Disconnect the water hose from the distribution tube.
3. Gently take out the distribution tube.
4. With a brush, clean the tube with a dilute solution of warm water and a mild detergent such as dish-washing liquid. After removing the dirt and lint from the surface, rinse the tube with clean water.
5. Replace the distribution tube.
6. Reconnect the water supply.

4.5 Ice-making System Cleaning

Minerals that are removed from the water during the freezing cycle will eventually form a hard, scaly deposit in the water system. Cleaning the system regularly helps remove the mineral scale buildup. How often to clean the system depends upon how hard your water is or how effective your filtration may be. With hard water of 15 to 20 grains/gal. (4 to 5 grains/ liter, you may need to clean the system as often as once every 6 months.

1. Make sure that all the ice is off the evaporator. If ice is being formed, wait until the cycle is completed, then press the machine's ON/OFF switch on the control panel.
2. Remove all ice from the storage bin.
3. Keep the ice maker connected to the water supply. Pour 8 oz. of Nickel-Safe Ice Maker Cleaner Solution into the water trough. Then press the ON/OFF switch and the CLEAN button, initiating the wash cycle. The machine will run in the Automatic Clean Mode.
4. Allow 30 minutes for proper cleaning. After cleaning, press the ON/OFF switch again. Use a drain hose on the front of the water trough to drain off the waste water to a convenient container. NOTE: Don't drain off the waste water to the inside of the cabinet.
5. Repeat steps 3 and 4 (without Ice Maker Cleaning Solution) three times to rinse the ice making system thoroughly.

- NOTE: Ice Maker Cleaner Solution in the water bin during the rinse is not needed.



WARNING

The ice machine cleaner contains acids.
DO NOT use or mix with any other solvent-based cleaner products. Use rubber gloves to protect hands. Carefully read the material safety instructions on the container of the ice machine cleaner. Discard the first batch of ice produced after cleaning.

6. Prepare a sanitizing solution made of 1 ounce of household bleach and 2 gallons of hot water (95ºF to 115ºF). Wipe the entire bin inside and outside, covering the entire surface of the walls.
7. Fill a spray bottle with the sanitizing solution and spray all corners and edges, making sure to cover all surfaces with the solution.
8. Allow the solution to be in contact for at least 3 minutes, then dry.
9. Repeat step 5 to rinse the ice making system one more time.
10. Press the ON/OFF button again. The machine will return to the regular ice making mode. Discard the first batch of ice.

4.6 Extended Periods Of Non-Use



WARNING

Electrical Shock Hazard
Always disconnect power at the source before working on the unit.

Note: Do not winterize this unit with ANY type of anti-freeze; damage to the mold coating will occur, invalidating product's Limited Warranty and creating potential health hazard.

1. Turn off the water at the main water supply.
2. Disconnect the water supply line from the water inlet of the ice machine.
3. Remove any remaining ice from the storage bin.
4. Unclip and lower the drain tube of the water trough to drain the water into the bin, then let the remaining water drain out through the drain hole on the bottom of the bin. Reinstall the drain tube. Listen for the pump to turn on and run, draining the remaining water. If you do not hear the drain pump run, pour some more water into the ice bin to trigger the pump to turn on. Once the pump has turned on, run, and then turned off, the water is sufficiently drained.
5. Turn the unit off and unplug the power cord.
6. Leave the door propped open to allow for circulation to prevent mold and mildew.
7. Leave the water supply line disconnected, and the power cord unplugged until ready for use.

NOTICE: Never pull on the power cord to unplug the appliance form the electrical outlet. Grasp the plug of the power cord and pull out firmly.

CLEANING AND MAINTENANCE

4.7 Recommissioning The Unit

1. If stored outside, it is recommended that the unit be thoroughly inspected to remove any dirt or debris as well as for animals/insects.
2. Connect the water supply line, turn on the water, check for leaks, and then restore power to the unit. It is recommended to clean the unit after long-term storage by following the instructions on pages 14-15

4.8 Starting Up The Unit

1. Turn on the water, check for leaks, and then turn on power.
2. Turn on the unit by pressing the power button.
3. The water inlet valve will turn on immediately to supply water to the unit. The water pump and compressor will turn on later (approximately 5 minutes) to initiate the ice making cycle. If the machine was shut-off while in the ice-harvesting cycle, make sure the ice is harvested before starting up the unit.
4. The first harvest of ice should occur within 60 minutes of start-up.
5. After the unit purges air from the lines, normal harvesting and refilling occur every 40 minutes or less, under normal conditions.

TROUBLESHOOTING

Before Calling for Service

If the unit appears to be malfunctioning, read through the OPERATION section of this manual first. If the problem persists, check the Troubleshooting Guide on the following pages. Some of the problems mentioned in the Guide can be solved easily without a service call.

Troubleshooting Guide

Problem	Possible Cause	Probable Correction
The machine doesn't operate.	The ice maker is unplugged.	Plug the ice maker in.
	The fuse is blown.	Replace fuse. If it happens again, call for service to check for a short circuit in the unit.
	The ice maker power button is set at OFF.	Switch the ice maker power button to ON.
	The ice storage bin is full of ice.	Remove some ice cubes. Be sure the ice-full probe is free of ice.
The water doesn't feed in after the machine starts.	The water supply tap is turned off.	Turn on the water supply tap.
	The water supply pipe is not properly connected.	Reconnect the water supply pipe.
Machine makes ice, but bin does not fill up with ice.	The condenser may be dirty.	Clean the condenser.
	The air flow to the ice maker may be obstructed.	Check the installation.
	The ambient temperature and water temperature are high, or unit is near some heat source.	Check the installation.
Water is leaking out of the unit.	Some water falls to the floor when you open the door to remove ice from storage bin.	Normal condensation on the door or some water together with ice. Take care when you take out ice.
	Water supply connection is leaking.	Tighten fitting. See Connecting the water line.
	Drain pipe higher than drain outlet.	Lower drain pipe.

TROUBLESHOOTING

Cubes are partially formed or are white on the bottom.	Not enough water in the water trough.	Check if the water supply pressure is below 15 psig.
		Check water supply or filter may be restricted.
		Check for a water leak at the water trough.
Noise during operation.	The feet are not leveled and locked.	Level and lock the feet. See Leveling the Ice Maker.
	Certain sounds are normal.	See Normal Sounds.
The ice maker stops suddenly while making ice.	The electricity is off.	Reconnect the power supply line.
	The environment temperature is out of the stated range.	Cut off the electricity and leave the ice maker disconnected until the temperature returns to within the stated range.
	The ice storage bin is full of ice.	Remove some ice cubes; make sure the ice-full probe is free of ice.
The body of the ice maker is electrified.	The ground line isn't in the socket.	Use a socket meeting the grounding requirements.
Scaling occurs frequently inside the machine.	The hardness level of the water is too high.	Install a water-softening device in front of the water inlet.
Water leaks from the ice storage bin.	The drainhole below the ice storage bin is blocked.	Remove the ice storage bin and clean the drainhole.
	The drain hose is kinked or improperly placed higher than the floor of the ice storage bin.	Check the drain hose to be sure water can be drained out unhindered.
Buzzer alarm	Problem in pumping out water.	Check for correct operation of pumping out water pump, water lever switch and drain tube .

PN:1866844500

WARRANTY

THOR KITCHEN®

Warranty&Service

This appliance has been manufactured by Thor International, 10830 Ada Ave Montclair, CA 91763 United States.

For Customer Service, please call (877) 288 - 8099

For the most up to date warranty and service policy, please refer to our website WWW.THORKITCHEN.COM/WARRANTY-REGISTRATION

For in-warranty service requests, please visit our website at WWW.THORKITCHEN.COM/SERVICE

Please Note: You must provide proof of purchase or installation date for any in-warranty service requests

We Stand Behind the Quality of Our Appliances.

Reliability and customer satisfaction are our top priorities. We offer a solid two-year warranty on both parts and labor. Enjoy professional-grade performance with the confidence that we've got you covered.

Warranty Registration Made Easy.

01 Scan the QR Code or visit thorkitchen.com/register-your-product.

02 Input your purchase and product information and select register.

03 That's it. You're all set. Enjoy!

Questions: service@thorinternational.com

WARRANTY

PARTS

THOR KITCHEN

ThorKitchen.com | #IgniteYourCulinaryCreativity