Form No. 3442-872 Rev A

Trimmer Mount Kit

Z Master® 4000 Series Riding Mower

Model No. 144-2665

Installation Instructions

Installation

Loose Parts

Use the chart below to verify that all parts have been shipped.

Procedure	Description	Qty.	Use
1	No parts required	–	Prepare the machine.
2	Upper trimmer mount bracket Large fist clamp Large backer plate Carriage bolt (1/4 x 1-1/2 inches) Flange nut (1/4 inch)	1 1 1 2 2	Assemble the upper trimmer mount assembly.
3	Carriage bolt (5/16 x 7/8 inch) Flange nut (5/16 inch)	2 2	Secure the upper trimmer mount assembly to the support bracket.
4	Support bracket Tube spacer Carriage bolt (3/8 x 3 inches) Flange nut (3/8 inch)	1 2 2 2	Install the support bracket.
5	Lower trimmer mount assembly Flange nut (3/8 inch) Carriage bolt (3/8 x 1-1/4 inches)—for machines with the Bagger Kit installed Hex-head bolt (3/8 x 1 inch)—for machines without the Bagger Kit installed	1 2 2 2	Install the lower trimmer mount assembly.
6	Trimmer mount bracket Fist-mount plate Small fist clamp Small backer plate Flange nut (1/4 inch) Carriage bolt (1/4 x 3/4 inch) Carriage bolt (1/4 x 1-1/4 inches)	1 1 1 1 4 2 2	Assemble the trimmer mount bracket.
7	Carriage bolt (1/4 x 3/4 inch) Flange nut (1/4 inch)	2 2	Secure the trimmer mount bracket to the lower trimmer mount assembly.
8	No parts required	–	Secure a trimmer to the mount assemblies.

© 2020—The Toro® Company
8111 Lyndale Avenue South
Bloomington, MN 55420

Register at www.Toro.com.

CE

Original Instructions (EN)
Printed in the USA
All Rights Reserved

3442-872

1

Preparing the Machine

No Parts Required

Procedure

1. Park the machine on a level surface.
2. Move the motion-control levers to the NEUTRAL-LOCK position.
3. Engage the parking brake.
4. Shut off the engine and remove the key.

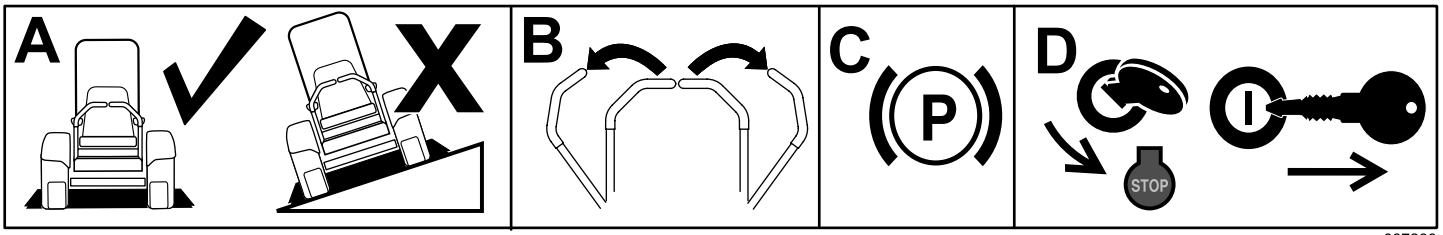

g037289

g037289

Figure 1

2

Assembling the Upper Trimmer Mount Assembly

Parts needed for this procedure:

1	Upper trimmer mount bracket
1	Large fist clamp
1	Large backer plate
2	Carriage bolt (1/4 x 1-1/2 inches)
2	Flange nut (1/4 inch)

Procedure

Assemble the upper trimmer mount assembly (Figure 2).

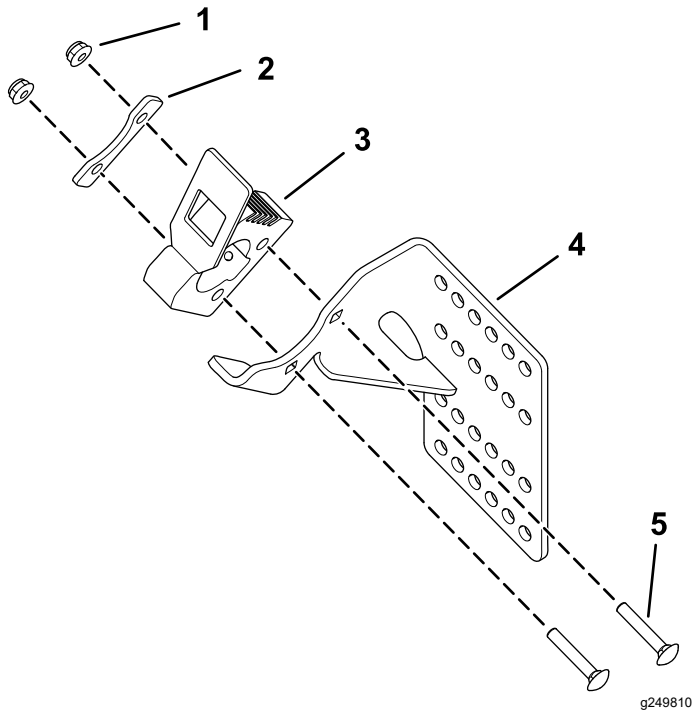

Figure 2

1. Flange nut (1/4 inch)
2. Large backer plate
3. Large fist clamp
4. Upper trimmer mount bracket
5. Carriage bolt (1/4 x 1-1/2 inches)

3

Securing the Upper Trimmer Mount Assembly to the Support Bracket

Parts needed for this procedure:

2	Carriage bolt (5/16 x 7/8 inch)
2	Flange nut (5/16 inch)

Procedure

Secure the upper trimmer mount assembly to the support bracket using 2 carriage bolts (5/16 x 7/8 inch) and 2 flange nuts (5/16 inch) as shown in Figure 3.

Note: Multiple mounting hole locations are provided to adjust the mounting position of the trimmer for clearance.

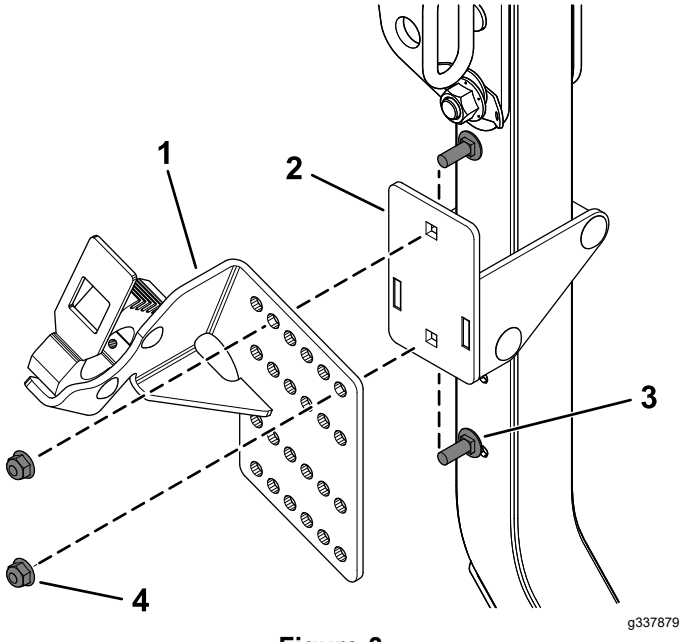

Figure 3

1. Upper trimmer mount assembly
2. Support bracket
3. Carriage bolt (5/16 x 7/8 inch)
4. Flange nut (5/16 inch)

4

Installing the Support Bracket

Parts needed for this procedure:

1	Support bracket
2	Tube spacer
2	Carriage bolt (3/8 x 3 inches)
2	Flange nut (3/8 inch)

Procedure

1. Lower the roll bar.
2. Install the support bracket to the right post of the roll bar using 2 tube spacers, 2 carriage bolts (3/8 x 3 inches), and 2 flange nuts (3/8 inch) as shown in Figure 4.
3. Slowly raise the roll bar and ensure that there is no interference between the roll bar and support bracket.

   Adjust the height of the support bracket if there is contact.

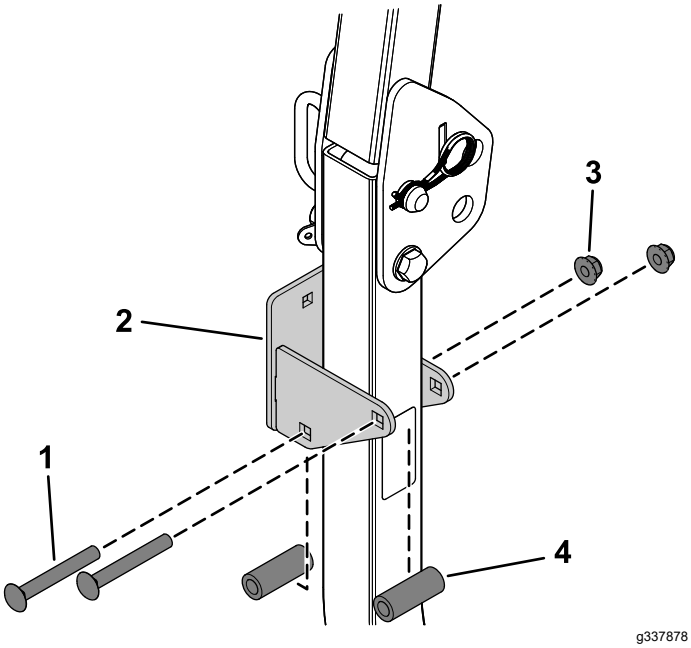

Figure 4

1. Carriage bolt (3/8 x 3 inches)
2. Support bracket
3. Flange nut (3/8 inch)
4. Tube spacer

5

Installing the Lower Trimmer Mount Assembly

Parts needed for this procedure:

1	Lower trimmer mount assembly
2	Flange nut (3/8 inch)
2	Carriage bolt (3/8 x 1-1/4 inches)—for machines **with** the Bagger Kit installed
2	Hex-head bolt (3/8 x 1 inch)—for machines **without** the Bagger Kit installed

Procedure

If the Bagger Kit **is** installed with the front caster weights on your machine, use the **2 carriage bolts (3/8 x 1-1/4 inches)** when installing the lower trimmer mount assembly.

If the Bagger Kit **is not** installed on your machine, use the **2 hex-head bolts (3/8 x 1 inch)** when installing the lower trimmer mount assembly.

Secure the lower trimmer mount assembly using the holes shown in Figure 5 for 48-inch and 52-inch mower decks or 60-inch mower decks.

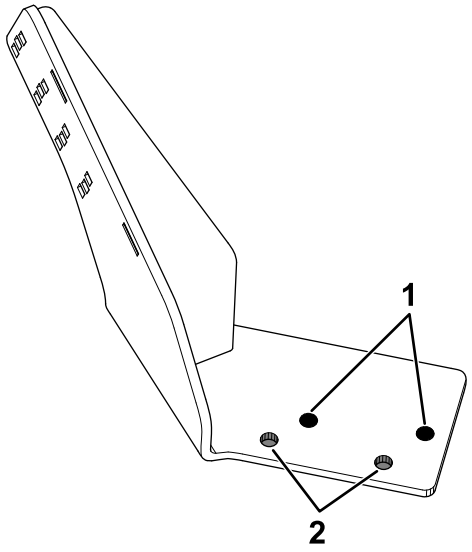

g337881

Figure 5

1. Hole locations for 48-inch and 52-inch mower decks
2. Hole locations for 60-inch mower decks

Install the lower trimmer mount assembly near the tie-down hook mounting location on the front, right side of the frame using 2 carriage bolts (3/8 x 1-1/4 inches) or 2 hex-head bolts (3/8 x 1 inch) and 2 flange nuts (3/8 inch) as shown in Figure 6.

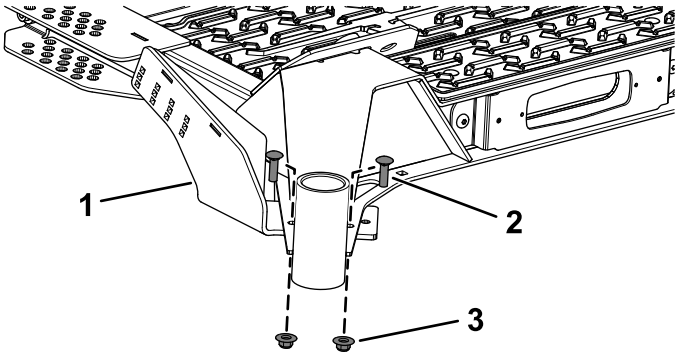

g337882

Figure 6

Carriage bolt installation shown

1. Lower trimmer mount assembly
2. Carriage bolt (3/8 x 1-1/4 inches)
3. Flange nut (3/8 inch)

6

Assembling the Trimmer Mount Bracket

Parts needed for this procedure:

1	Trimmer mount bracket
1	Fist-mount plate
1	Small fist clamp
1	Small backer plate
4	Flange nut (1/4 inch)
2	Carriage bolt (1/4 x 3/4 inch)
2	Carriage bolt (1/4 x 1-1/4 inches)

Procedure

Assemble the trimmer mount bracket (Figure 7).

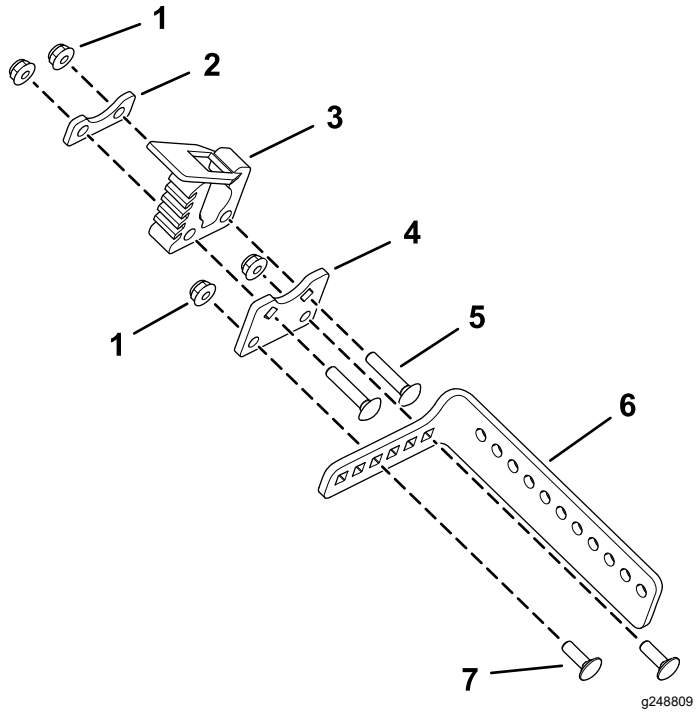

Figure 7

1. Flange nut (1/4 inch)
2. Small backer plate
3. Small fist clamp
4. Fist-mount plate
5. Carriage bolt (1/4 x 1-1/4 inches)
6. Trimmer mount bracket
7. Carriage bolt (1/4 x 3/4 inch)

7

Securing the Trimmer Mount Bracket to the Lower Trimmer Mount Assembly

Parts needed for this procedure:

2	Carriage bolt (1/4 x 3/4 inch)
2	Flange nut (1/4 inch)

Procedure

1. Fully lower the mower deck.
2. Secure the trimmer mount bracket assembly to the lower trimmer mount assembly using 2 carriage bolts (1/4 x 3/4 inch) and 2 flange nuts (1/4 inch) as shown in Figure 8.

   Note: Multiple mounting hole locations are provided to adjust the mounting position of the trimmer for clearance.

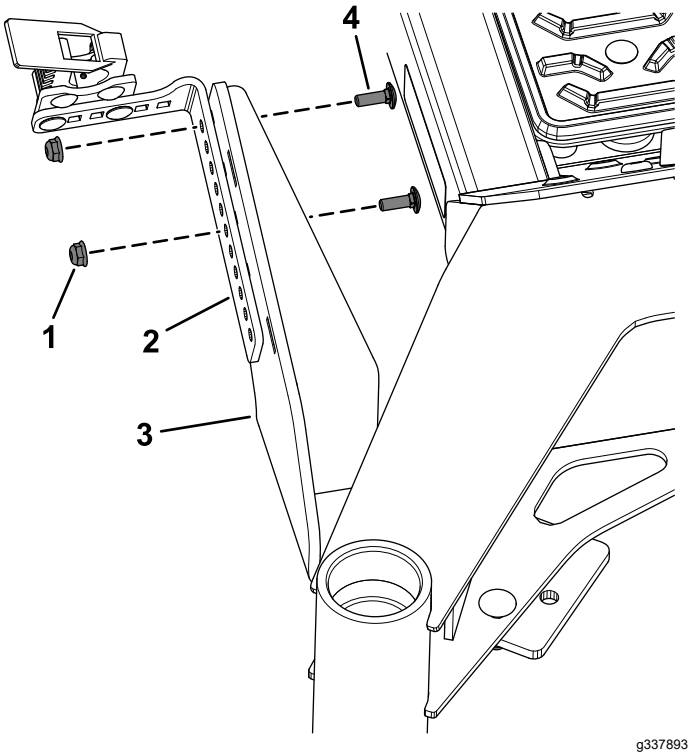

Figure 8

1. Flange nut (1/4 inch)
2. Trimmer mount bracket
3. Lower trimmer mount assembly
4. Carriage bolt (1/4 x 3/4 inch)

8

Securing a Trimmer to the Mount Assemblies

No Parts Required

Procedure

Insert the handle end of the trimmer into the large fist clamp and the trimming end into the small fist clamp.

Check the fit of the trimmer for interference, and adjust the mounting hole locations as required for clearance to the machine. Ensure that all the fasteners are tightened after any adjustments.



Count on it.