Renaissance Cooking Systems
PREMIER PRO BURNER

MODEL # RJCSB3A Use Liner Jacket LJRJCSB3A



INSTALLATION AND OPERATING INSTRUCTIONS

INSTALLER: Leave these instructions with consumer.
CONSUMER: READ & retain for future reference.

Important: READ THESE INSTRUCTIONS CAREFULLY BEFORE BEGINNING INSTALLATION

SAFETY WARNINGS & CODES

⚠ DANGER

IF YOU SMELL GAS:

1. Shut off the gas to the appliance.
2. Extinguish any open flame.
3. Open lid to vent.
4. If odor continues, keep away from the appliance, and ***immediately*** call your gas supplier or fire department.

⚠ WARNING

1. Do not store or use gasoline or other flammable vapors and liquids in the vicinity of this or any other appliance.
2. A propane cylinder not connected for use shall not be stored in the vicinity of this or any other appliance with flame.

WARNING

Improper installation, adjustment, alteration, service, or maintenance can cause injury or property damage. Refer to this manual. For assistance or additional information consult a qualified professional installer, service agency, or the gas supplier.

CODE AND SUPPLY REQUIREMENTS: This pro burner must be installed in accordance with local codes and ordinances, or, in the absence of local codes, with either the latest *National Fuel Gas Code (ANSI Z223.1/ NFPA 54),* and *Natural Gas and Propane Storage and Handling Installation Code (CSA-B149.1).*

This appliance and its individual shutoff valves must be disconnected from the gas supply piping system when testing the system at pressures in excess of ½ psig (3.5 kPa).

This appliance must be isolated from the gas supply piping system by closing its individual manual shut-off valves during any pressure testing of the gas supply system at pressures up to and including ½ psig (3.5 kPa).

All electrical outlets in the vicinity of the pro burner must be properly grounded in Accordance with local codes or, in the absence of local codes, with the ***National Electrical Code, ANSI/NFPA 70, or the Canadian Electrical Code, CSA C22.1,*** whichever is applicable.

Keep all electrical supply cords and fuel supply hoses away from any heated surface at all times.

Safety and Installation Instructions



To reduce the risk of fire, electrical shock, or Injury, read and follow these basic precautions before operating your gas power burner.

When using your *Pro Burner*, please read and follow these basic precautions:

Pro Burner INSTALLATION
This Outdoor-cooking appliance (Pro Burner) must be installed in accordance with all local and state codes INSPECTED by your local CITY & Fire department.
If installation is planned in an area with no local codes, the gas burner must be installed in accord with the National Fuel Gas Code ANSI Z223.1 and storage and handling of liquefied petroleum gases, ANSI/NFPA 58 or CSA B149.1 natural gas and propane installation code. ALWAYS USE PROFESSIONAL BUILDERS & INSTALLERS. For Safety – have inspected by your local city, Gas Company and Fire Department before use. This is NOT an indoor appliance – for outdoor use only. Do not install into a combustible cabinet without an insulating liner - LJRJCSB3A

CALIFORNIA PROPOSITION 65 WARNING
The burning of gas cooking fuel generates some by-products, which are on the list of substances, which are known by the State of California to cause cancer or reproductive harm. California law requires businesses to warn customers of potential exposure to such substances. To minimize exposure to these substances, always operate the unit according to the use and care manual, ensuring you provide good ventilation when cooking.



NOTE: DO NOT USE THIS APPLIANCE UNDER OVERHEAD CONBUSTABLE SURFACES

GENERAL SAFETY REQUIREMENTS:

1. The installation of this appliance must conform with local codes or, in the absence of local codes, Either the *National Fuel Gas Code, ANZI Z223.1/NFPA 54, or CAN/CGA-B149.1, Natural Gas Installation Code or CAN/CGA-B149.2*, Propane Installation Code.
2. This outdoor cooking gas appliance is not intended to be installed in or on recreational vehicles and /or boats.
3. This outdoor cooking gas appliance is intended for use outdoors and shall not be used in a building, garage or any other enclosed area.
4. **Minimum clearance of 16" – 18" inches from the back and sides of the Pro Burner to adjacent combustible construction must be maintained. This outdoor cooking gas appliance shall not be located under overhead-unprotected combustible construction.**
5. If the use of an external electrical source is requires when installed, this outdoor cooking gas appliance must be electrically grounded in accordance with the local codes or, in the absence of local codes, with the National Electrical Code, ANSI/NFPA 70, or the Canadian Electrical Code, CSA C22.1. Keep any electrical supply cord, or the fuel supply hose away from any heated surfaces.
6. Keep your Pro Burner in an area clear and free from combustible materials, gasoline and other flammable vapors and liquids.
7. DO NOT obstruct the flow of combustion and ventilation air to this appliance. Keep the ventilation openings of the cylinder enclosure free and clear from debris.
8. Check all gas connections for leaks with soapy water solution and brush. Never use an open flame to test for gas leaks.
9. Check flexible hoses for cuts and wear that may affect the safety before each use.
10. Never use the Pro Burner in a windy area.
11. Never use the Pro Burner without the drip pan installed and push all the way to the back of the Pro Burner. Without the drip pan, hot liquid and debris could leak downward and could produce a fire hazard.
12. CALIFORNIA PROPOSITION 65-WARNING: The burning of gas cooking fuel generates some by-products which are on the list of substances known by the State of California to cause cancer or reproductive harm. California law requires businesses to warn customers of potential exposure to such substances. To minimize exposure to these substances always operate this unit according to the use and care manual, ensuring you provide good ventilation when cooking with gas.

NOTE: In Massachusetts: All gas products must be installed using a "Massachusetts" licensed plumber or gas fitter. A "T" Handle type manual gas valve must be installed in the gas supply line to this appliance. This applies to permanently installed natural gas and propane installations. This does not apply to propane portable installations using a 20-pound tank.

WHERE TO INSTALL THE PRO BURNER

IMPORTANT: THIS PRO BURNER IS FOR OUTDOOR USE ONLY.

WARNING

The pro burner must be installed in a masonry or other type of fireproof surround. The unit is not insulated and therefore must be installed or placed with 16" – 18" of side and back clearance from unprotected combustible materials such as wood, Plastic, or stucco with wood framing. PLEASE NOTE: if this is not done, the combustible material will catch on fire and potentially damage your house / structure and may cause bodily harm due to the fire. Optional insulating Liner #LJRJCSB3A is available.

Do not install this unit under unprotected flammable surfaces. Do not install or use this appliance inside a building, garage, or any other enclosed area. It must not be used in or on recreational vehicles or boats.

This is a slide-in unit designed to fit into open-front enclosures. Control panel of the unit is removable for gas hookup, servicing and burner adjustment. Control panel must remain removable after you install the unit. Do not have this panel sealed for any reason.
Important: The lip on the side requires 1" (2.5 cm) of countertop on each side and back to Support the unit.
Note: We recommend you build the enclosure for the pro burner 6"-12" (15.2 cm- 30.5 cm) LOWER than your countertop. This will ensure a safer environment when using tall cooking pots. Please make sure that you do not overfill large pots of oil for the oil will spill over and catch on fire.

Note: This unit should be installed so that it can be removed at a later date if factory service is required.

ENSURING PROPER COMBUSTION AIR AND COOLING AIR FLOW

You must maintain proper air flow for your pro burner to perform as it was designed (diagram below) If airflow is blocked, overheating and poor combustion will result. Make sure not to block the 1" (2.5 cm) front air inlet along the bottom of the control panel or more than 75% of the support grid surface with pans or griddles.

Note: The 1" (2.5 cm) front air space allows access to the drip tray.

EXHAUST REMOVAL

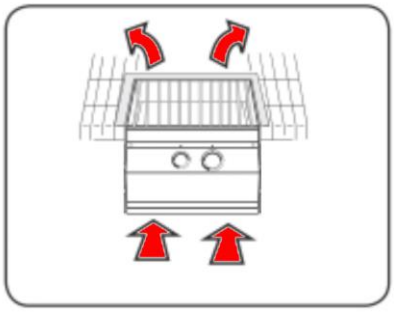

If installed under a patio roof, the cooking grid area should be fully covered by a chimney and exhaust hood. An exhaust fan with a rating of up to 1,000 CFM (472 liters per second) may be necessary to efficiently remove smoke and other Cooking by-products from the covered area. Installation in fully enclosed patio areas is not recommended.



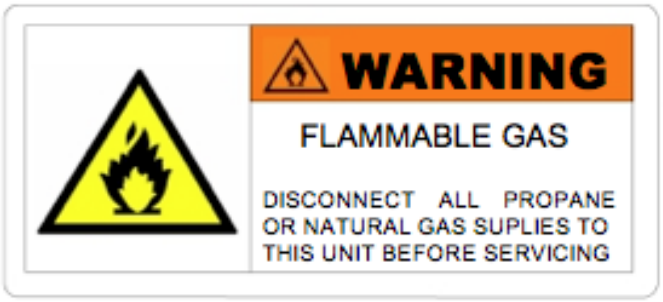

GAS SAFETY REQUIREMENTS

Each appliance is set and tested at the factory for the type of gas supply to be used. Identify the Type of gas, either natural gas or LP (Liquid Propane) gas and make sure that the marking on the rating plate located on the side of the unit. matches the gas being supplied to the Pro Burner. The rating plate is located on the side of the Pro Burner.

All gas hook up connections should be made by a qualified technician and in accordance with local codes and ordinances. The installation must conform with local codes or, in the absence of local codes, with either the national Fuel Gas Code, ANSI Z223.1/NFPA 54, or CAN/CGA-B149.1, Natural Gas Installation Code or CAN/CGA-B149.2, Propane Installation Code.

WARNING: CHECK TO ENSURE THAT THE GAS SUPPLY HOSE DOES NOT COME IN CONTACT WITH ANY HOT SURFACE OF THE PRO BURNER.

L.P. GAS (LIQUIFIED PETROLEUM /PROPANE)

If your Pro Burner is factory built for L.P., the regulator required is set for 10” water column and is for use with L.P. gas only. If unit is NOT supplied with regulator please make sure that all requirements are met for the type of regulator required. Use part number RONHK.

L.P. GAS SAFETY REQUIREMENT

The LP-gas supply cylinder must be constructed and marked in accordance with the *Specifications for LP-gas Cylinders* of the U.S. Department of Transportation (D.O.T.) or the National Standards of Canada *CAN/CSA-B339, Cylinders, Spheres and Tubes for the Transportation of Dangerous Goods, and Commission,* as applicable; and

1. Provided with a listed overfilling prevention device.
2. Provided with a cylinder connection device compatible with the connection for outdoor cooking appliances.

It must be provided with a shut-off valve terminating in gas tank valve outlet. It must include a Collar to protect the cylinder valve. The cylinder supply system must be arranged for vapor withdrawal.

Do not operate the gas Pro Burner indoors or in any enclosed area. If the gas Pro Burner is not in use, the gas must be turned off at the supply cylinder. If the Pro Burner is to be stored indoors, disconnect the gas supply cylinder and leave the cylinder outdoors.

LP GAS HOOK-UP

Do not use any replacement regulator other than that specified by the manufacturer. Use only pipe sealants that are approved for use with natural and LP gases. An installer-supplied gas shutoff valve must be installed in an accessible location. (Reference: leak test procedure).

VENTING YOUR ENCLOSURE: An enclosure or Island for LP gas cylinder or natural gas must be vented on the level of the cylinder valve and at floor level. The effectiveness of the opening(s) for purposes of ventilation shall be determined with the LP gas supply cylinder in place. This shall be accomplished by one of the following:

A. One side of the enclosure shall be fully open; or
B. For an enclosure having four sides, a top and a bottom:

At least two ventilation openings at cylinder valve level shall be provided in the sidewall, equally sized, spaced at 180 degrees (3.14 rad), and unobstructed. Each opening shall have a total free area of not less than 1/2 square inch per pound (7.1 cm2/kg) of stored fuel capacity and not less than a total free area of 10 square inches (64.5 cm2).

Ventilation opening(s) shall be provided at floor level and shall have a total free area of not less than ½" square inch per pound (7.1 cm2/kg) of stored fuel capacity and not less than a total free area of 10 square inches (64.5 cm2). If ventilation openings at floor level are in a sidewall, there shall be at least two openings. The bottom of the openings shall be at floor level and the upper edge no more than 5 inches (127 mm) above the floor. The openings shall be equally sized, spaced at 180 degrees (3.14 rad) and un-obstructed. See item #RVNT1 for vents.

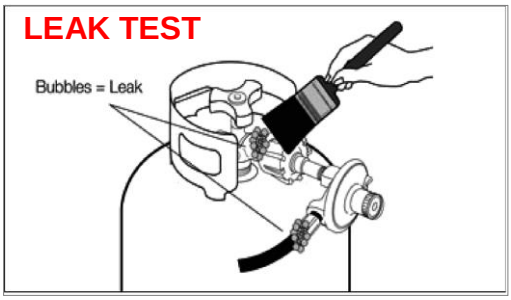



NATURAL GAS INSTALLATION

The installation must conform with local codes or, in the absence of local codes, with either The national Fuel Gas Code, ANSI Z223.1/NFPA 54, or CAN/CGA-B149.1, Natural Gas Installation Code or CAN/CGA-B149.2, Propane Installation Code.

1. This gas appliance and its individual shutoff valve must be disconnected from the gas supply piping system during any pressure testing of that system at the test pressures in excess of 1/2 psi (3.5 kPa).

2. This appliance must be isolated from the gas supply piping system by closing its individual manual shutoff valve during any pressure testing of the as supply piping system at test pressures equal to or less than 1/2 psi (3.5 kPa).

If the gas Pro Burner is factory built for natural gas, the regulator needs to be set for 4” water column. The regulator is convertible Later to 10” water column for system LP application. Do not use with a 20-lb LP cylinder.
Make sure that the regulator is set for natural gas. To check, remove the top cap. You will find the conversion plastic pin attached to the cap to the underside of the cap. If the disc (1/2 in. diameter) of the pin is close to the cap, then the regulator is set for natural gas. If the disc is at the tip of the pin, away from the brass cap, the regulator is set for system LP application. To convert to natural gas, remove the plastic conversion pin and invert and replace it back in a manner such that the disc is close to the brass cap. For both natural and LP, the maximum inlet pressure is 14” water column.

Do not use any replacement regulator other than that specified by RCS. Use only pipe sealants that are approved for use with natural and LP gases. An installer-supplied gas Shutoff valve must be installed in an accessible location.

LEAK TEST

CAUTION BEFORE TESTING

NEVER USE THE PRO BURNER WITHOUT FIRST LEAK TESTING THE GAS CONNECTIONS.

WARNING: DO NOT USE OPEN FLAME TO CHECK FOR LEAKS.
USE OF AN OPEN FLAME COULD RESULT IN A FIRE, EXPLOSION AND BODILY HARM. DO NOT SMOKE WHILE PERFORMING THE LEAK TEST!

IF AT ANYTIME YOU SMELL GAS – SWITCH OFF ALL OF YOUR EQUIPMENT AND CALL A PROFESSIONAL TO DETECT THE GAS LEAK. ALWAYS INFORM ALL MEMBERS OF YOUR FAMILY ABOUT THIS IMPORTANT FACT – SMELL GAS = DO NOT USE THE EQUIPMENT.

To prevent fire or explosion hazard, DO NOT use or permit sources of ignition in the area while performing a leak test. Perform leak test outdoors only.
Check to ensure that flexible hoses do not have any cuts and wear that may affect the safety before each use. Use only replacement regulator specified by the manufacturer.

1) Prepare a leak testing solution of soap and water in a spray bottle (50% solution)
2) Confirm that all control knobs are in the off position
3) Turn the main gas supply valve ON
4) Apply the leak test solution by spraying or brushing on all of the pipe joints, fittings and hose
5) As gas Leak is detected when:
   a. There is a faint smell of gas and/or
   b. There is bubbles around the connections
6) DO NOT ATTEMPT TO IGNITE THE BURNER
7) Turn off the main Gas Supply
8) Call a Certified/qualified professional to repair the GAS LEAK
9) DO NOT attempt to use the pro burner until the leak is fixed.

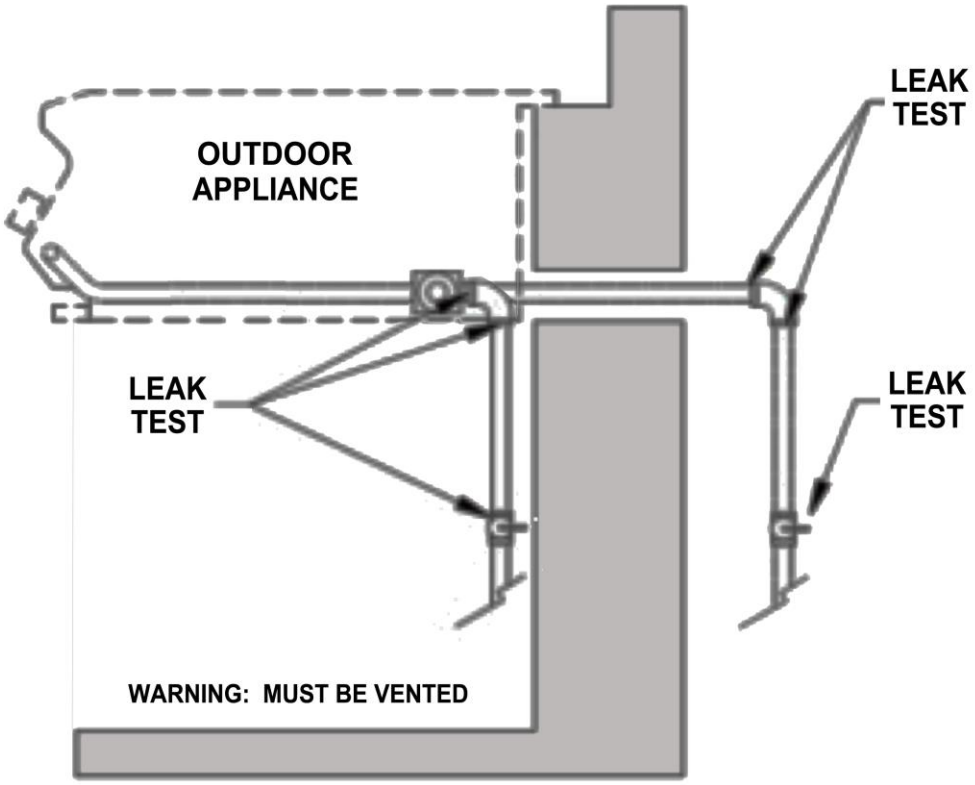

TYPICAL LEAK TEST

TYPICAL BUILDING DIMENSIONS

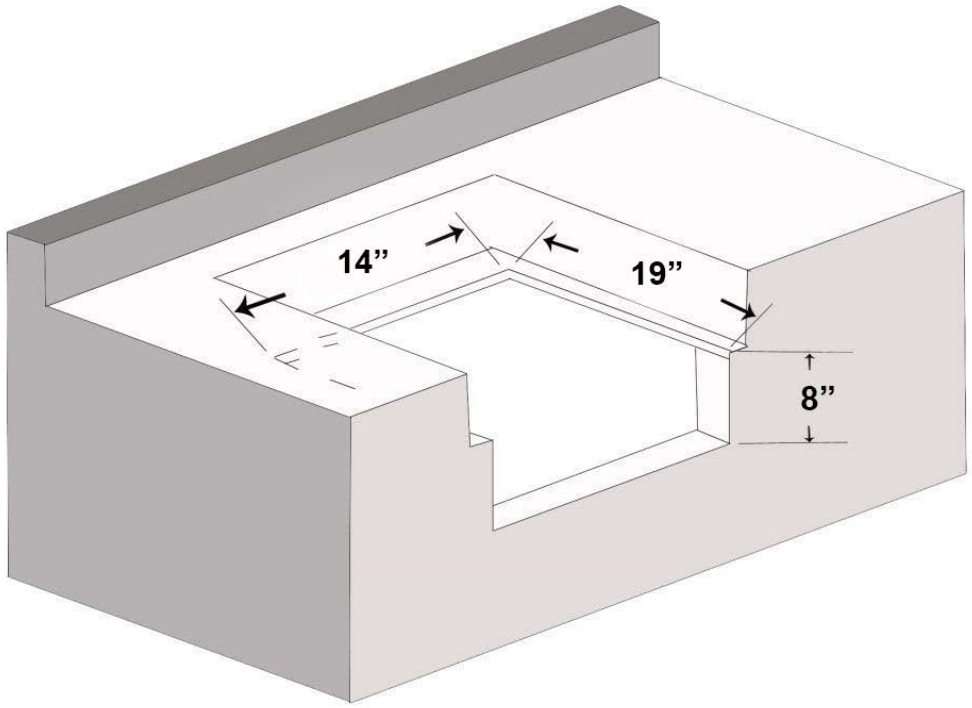

NOTE: Its is recommended to build the Pro Burner at least 6”-12” lower than the countertop

CLEARANCE TO COMBUSTIBLE CONSTRUCTION

A minimum clearance of 16” – 18” from the sides and back of the Pro Burner to adjacent Vertical combustible construction must be maintained.

CLEARANCE TO NONCOMBUSTIBLE CONSTRUCTION

A minimum clearance of 1” from the back of the Pro Burner

Above cooking surface to non- combustible construction is required.

A minimum of 1” clearance to the sides of the Pro Burner above cooking surface to non-Combustible construction is recommended.

NOTE: DO NOT USE THIS APPLIANCE UNDER OVERHEAD CONBUSTABLE SURFACES

CLEANING & MAINTENANCE

SPIDER AND INSECT WARNING

Spiders and other insects can nest in the burner of this and any other Pro Burner, which causes the gas to flow from the front of the burner. This dangerous “condition” can cause a fire behind the valve panel, damaging the Pro Burner and making the Pro Burner unsafe to operate. Inspect the burners once a year or if the Pro Burner has not been used for more than one month or if any of the following conditions occur:

1) The smell of gas in conjunction with the burner flames appearing yellow.
2) The Pro Burner does not reach temperature.
3) The Pro Burner heats unevenly.
4) The burner makes popping noises

STAINLESS STEEL MAINTENANCE

The Pro Burner is made of stainless steel construction.
Never clean the stainless steel when it is hot. After the initial cooking use, certain areas of the Pro Burner may discolor. This is a normal discoloration caused by the internal heat given off by the burner. Specks of grease can gather on the surface of the stainless steel and get baked-on. These can be removed by using a mild abrasive pad (like Scotch Brite) with a stainless steel cleaner. Use the mildest cleaner and always scrub in the direction of the grain.
Do not use steel wool to clean the Pro Burner.
Do not use abrasives on the polished highlights. Be extra careful when cleaning around the highlights. Metal polisher or mild chrome cleaner can be used to bring back the luster on highlights. To touch-up minor scratches in the stainless steel, sand the affected surface very lightly, with 100-dry grit emery sandpaper in the direction of the grain

PRO BURNER GRATE MAINTENANCE

The easiest way to clean the grates is to scrub them with a barbeque brush immediately after cooking is completed and the flame is turned off.

Wear a heat protective barbeque mitt to protect your hands from the heat and steam. Dip a brush in tap water and scrub the hot grates. Dip the brush frequently in tap water. Steam, created as water comes in contact with the hot Pro Burner, helps loosen food particles stuck in the Pro Burner. These food particles will either get burned or fall into the cleaning pan. Cleaning of the Pro Burner would be longer and more difficult if the Pro Burner grates are allowed to cool before cleaning.

BURNERS CLEANING & MAINTENANCE

Burners are made of brass and stainless steel and can be cleaned using a brush, warm water and soap. Check every port hole for clogs. Use a wire pin to clean out clogged ports.

DRIP PAN

The drip pan collects grease, liquid and fallen food particles. Allow the pan and its contents to cool before cleaning. Slide the pan out and wipe it clean. Make sure the drip pan is fully inserted back into the Pro Burner. It is highly recommended to clean the pan after every use to avoid any possibility of a grease fire. DO NOT use the Pro Burner without the drip pan pushed all the way to the back of the Pro Burner unit.

OPERATING INSTRUCTIONS

BEFORE LIGHTING THE PRO BURNER

1) **DO NOT ATTEMPT TO LIGHT THE PRO BURNER IF YOU SMELL GAS.**

2) **WARNING! IT IS CRITICAL THAT THE GAS BURNERS ARE PROPERLY INSTALLED WITH THEIR ORIFICES INSIDE THE BURNERS AIR SHUTTERS. If not properly installed, gas may leak outside of the burner that could lead to fire, potential damage to your Pro Burner and bodily injury.**

Inspect the gas supply piping or hose prior to turning the gas ON. If there is evidence of cuts, wear, or abrasion, it must be replaced prior to use. The replacement pressure regulator and hose assembly must be the type specified by the manufacturer. Do not use the Pro Burner if the odor of gas is present.

If the unit is LP, screw the regulator and hand tighten to the valve of the cylinder and leak check the hose and regulator connections with a soap and water solution before operating the Pro Burner. Make sure you always read about LEAK PRVENTION.

Always keep your face and body as far away as possible when lighting.

Refer to spiders and insects warning and procedure under the cleaning and maintenance page of this manual.

TO LIGHT THE PRO BURNER'S BURNER
Lighting the Pro Burner

1. Open the gas supply shut-off valve.
2. Push in the knob and rotate the knob counter-clockwise, wait a few seconds and then click the sure-strike ignition system to ignite. If the igniter does not light turn to the right and OFF position, verify that the gas is on and then try again.

3. Once you see or hear a flame you can adjust the burner to the desired position.

CAUTION: If ignition does not take place within a few clicks, turn knob to the OFF Position, wait for five minutes and repeat step 2.

Match/BBQ Lighter Lighting Instructions:
The burners can be lit manually using a lighted long match, taper or long BBQ lighter.

1. Push and turn the knob counter-clock-wise past the "CLICK" position. Hold the knob pushed in for 5 seconds.

2. Insert a lit match or BBQ lighter thru the grates and near the top of the burner. Once you see or hear a flame you can release the knob.

NOTE: if the burner does not ignite for the first time use – there may be "AIR" in the line. Contact your Gas Professional to bleed out the line.

Important: If burner fails to light within 5 seconds, turn off gas and wait 5 minutes before repeating the process.

Warning: If you smell gas with the valves off, shutoff the gas supplies and immediately checks for leaks using the soapy water technique.

RJCSB3A REPLACEMENT PARTS LIST

S/N	Part #	PART DESCRIPTION	QTY	
			LP	NG
1		HANDLE	1	1
2		HOOD PLATE	1	1
3		RUBBER BLOCK	8	8
4		INNER GRATE	1	1
5		OUTER GRATE	1	1
6		BODY ASSEMBLY	1	1
7		FIRE COVER	1	1
8		FIRE COVER BASE	1	1
9		MID BURNER ORIFICEΦ1.5(LP)	1	
		MID BURNER ORIFICEΦ2.35(NG)		1
10		BURNER BASE	1	1
11		RIGHT ANGLE FITTING	1	1
12		BURNER BASE BRACKET	1	1
13		TUBE BURNER ASSEMBLY	1	1
14		IGNITER	1	1
15		TUBE BURNER IGNITER	1	1
16		TUBE BURNER ORIFICEΦ1.8(LP)	1	
		TUBE BURNER ORRIFICEΦ3.45(NG)		1
17		ORIFICE RIGHT ANGLE FITTING ASSEMBLY	1	1
18		BASIN FRAME BACK CONNECTION BOARD	1	1
19		BASIN FRAME ASSEMBLY	1	1
20		OIL DRIP TUBE	1	1
21		LED LIGHT WIRE	1	1
22		LED LIGHT	2	2
23		CONTROL PANEL	1	1
24		KNOB BEZEL	2	2
25		KNOB	2	2
26		DRIP TRAY	1	1
27		IGNITION WIRE L=240mm	1	1
28		IGNITION WIRE L=330mm	1	1
29		SS FLEX TUBE L=325mm Φ9mm	2	2
30		LED LIGHT SWITCH	1	1
31		LED LIGHT WIRE	1	1
32		TRANSFORMER	1	1
33		VALVE	2	2
34		MANIFOLD	1	1
35		VALVE LATCH	2	2
36		INLET TUBE JOINT	1	1
37		NG REGULATOR（7 Universe）		1
38		1/2" INSIDE AND OUTSIDE BRUSHED ELBOW		2
39		LP REGULATOR（RA328）	1	

RJCSB3A REPLACEMENT PARTS LIST

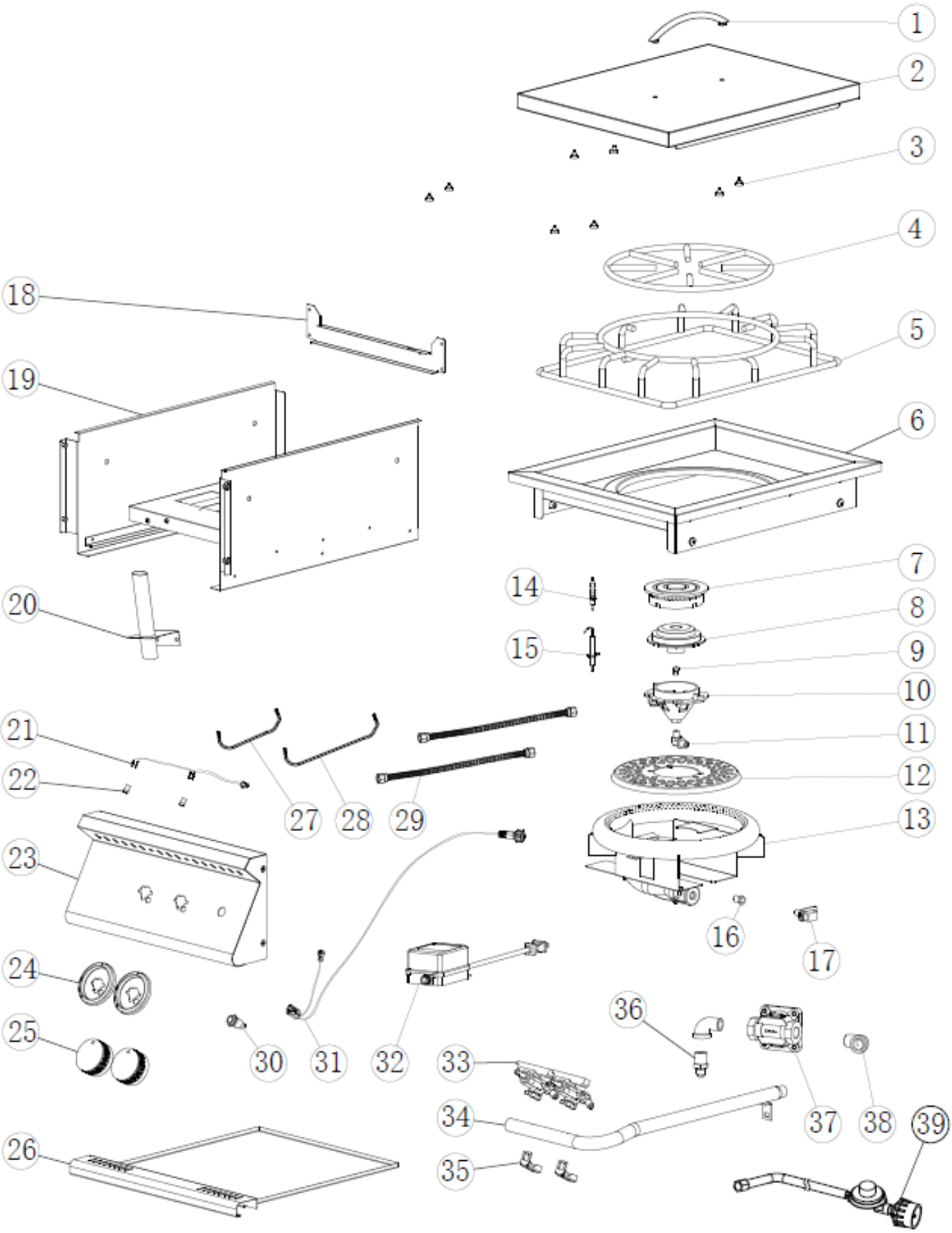

Renaissance Cooking Systems Product Warranty

RCS is proud to provide the industries most comprehensive warranty program.

All RCS **American Renaissance Grills, Cutlass Pro Series Grills and Cutlass Pro Series side burners, sinks, as well as ALL doors and drawers** are warrantied to be free from manufacturer defects for the lifetime of the original owner.

All RCS **Premier Series Grills and Premier Series Side Burners** are warrantied to be free from manufacturer defects for 15 years to the original owner.

All RCS **Refrigeration products** are warrantied to be free from manufacturer defects for 5 years to the original owner.

All **other products** carry a one-year warranty to the original owner.

This RCS warranty is effective for product sales beginning January 1st, 2020.

For service assistance, please reach out to us at the website below.

This warranty excludes normal surface corrosion, discoloration, surface scratches and surface rust which may occur. Improper maintenance, salt spray, chemicals, pesticides will affect the look and integrity of the components of these products. RCS will not be responsible for any damage caused as a result of not following owner's manual instructions. This non-transferrable warranty is limited to the replacement of original (one-time) defective parts, does not include shipping and labor to remove or install replacement parts, if necessary. The owner must retain and submit their original receipt with any warranty claim to receive warranty parts. The warranty applies to the original owner only. Coverage is for residential use only, no commercial applications apply. No registration required.

For more information, questions or assistance please visit us at RCSGasGrills.com and click the Customer Care Form.

RJCSB3A

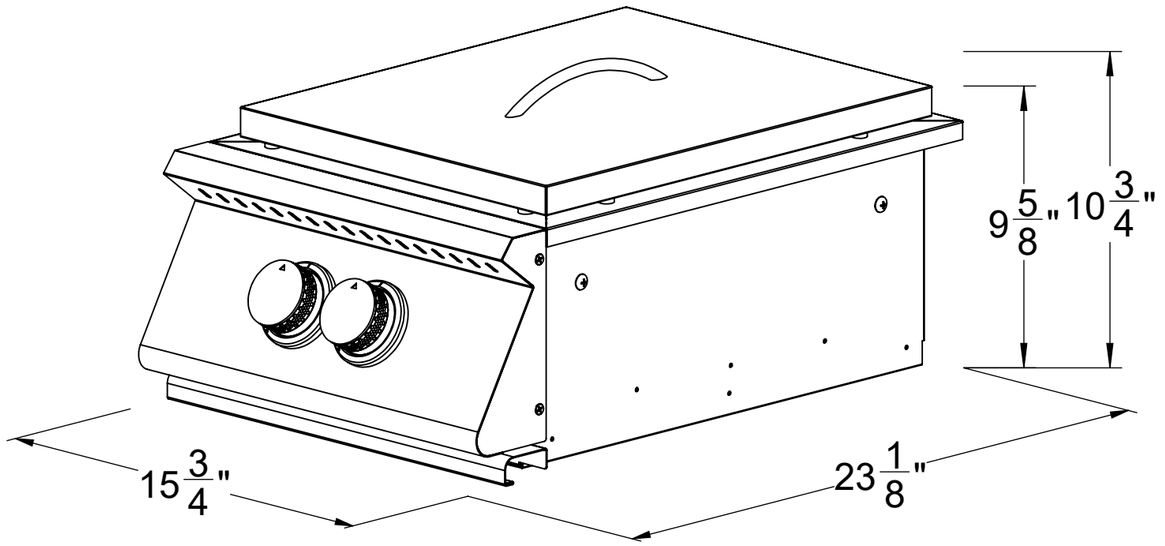

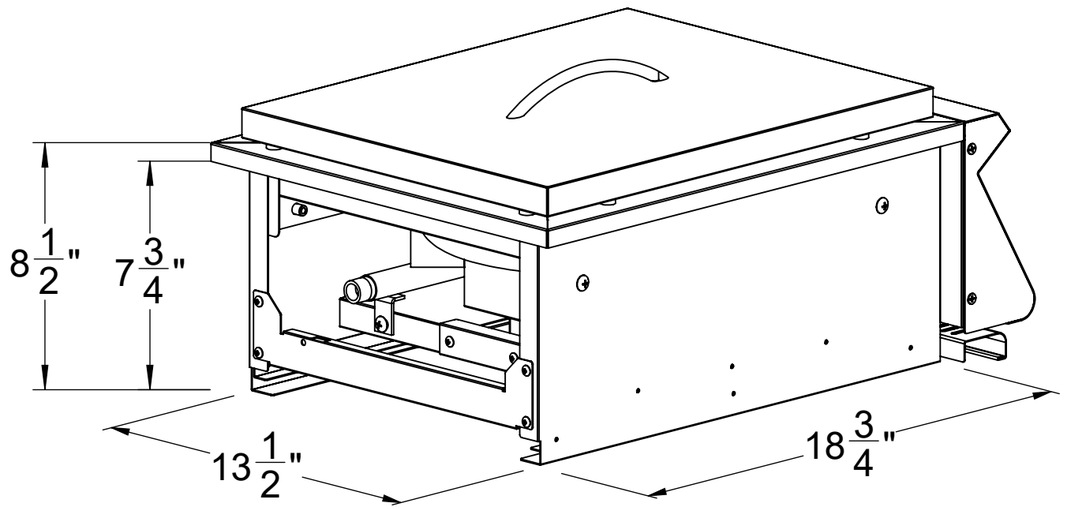

RJCSB3AL

