THOMSON



E6000 Pro Golf Trolley

User Manual

[Revision 1.0]

READ THIS MANUAL CAREFULLY BEFORE USE – FAILURE TO DO SO MAY RESULT IN INJURY, PROPERTY DAMAGE AND MAY VOID WARRANTY. • KEEP THIS MANUAL FOR FUTURE REFERENCE. • Products covered by this manual may vary in appearance, assembly, inclusions, specifications, description, and packaging.

THE BATTERY MAY HAVE SOME CHARGE ON ARRIVAL, IT IS IMPORTANT HOWEVER THAT THE BATTERY IS CHARGED PRIOR TO USE.

Safety

Safety messages are designed to alert you to possible dangers or hazards that could cause death, injury or equipment or property damage if not understood or followed. Safety messages have the following symbols:



You WILL be KILLED or SERIOUSLY INJURED if you do not follow instructions.



You CAN be KILLED or SERIOUSLY INJURED if you do not follow instructions.



You CAN be INJURED if you do not follow instructions or equipment damage may occur.

It is vital that you read and understand this user manual before using the product, including safety warnings, and any assembly and operating instructions. Keep the manual for future reference.

Safety precautions and recommendations detailed here must be fully understood and followed to reduce the risk of injury, fire, explosion, electrical hazard, and/or property damage.

Safety information presented here is generic in nature – some advice may not be applicable to every product. The term "equipment" refers to the product, be it electrical mains powered, battery powered or combustion engine powered.

- **Before Use** - If you are not familiar with the safe operation/handling of the equipment or are in any way unsure of any aspect of suitability or correct use for your application, you should complete training conducted by a person or organization qualified in safe use and operation of this equipment, including fuel/electrical handling and safety.
- Do NOT operate the equipment in flammable or explosive environments, such as in the presence of flammable liquids, gases, or dust. The equipment may create sparks or heat that may ignite flammable substances.
- Keep clear of moving parts.
- Equipment may be a potential source of electric shock or injury if misused.
- Do NOT operate the equipment if it is damaged, malfunctioning or is in an excessively worn state.
- Do NOT allow others to use the equipment unless they have read this manual and are adequately trained.
- Keep packaging away from children - risk of suffocation! Operators must use the equipment correctly. When using the equipment, consider conditions and pay due care to persons and property.

General Work Area Safety

- Work areas should be clean and well it.
- Do not operate the equipment if bystanders, animals etc are within operating range of the equipment or the general work area.
- If devices are provided for connecting dust extraction / collection facilities, ensure these are connected and used properly. Dust collection can reduce dust-related hazards.

General Personal Safety

- Wear appropriate protective equipment when operating, servicing, or when in the operating area of the equipment to help protect from eye and ear injury, poisoning, burns, cutting and crush injuries. Protective equipment such as safety goggles, respirators, non-slip safety footwear, hard hat, hearing protection etc should be used for appropriate equipment / conditions. Other people nearby should also wear appropriate personal protective equipment. Do not wear loose clothing or jewellery, which can be caught in moving parts. Keep hair and clothing away from the equipment.
- Stay alert and use common sense when operating the equipment. Do not over-reach. Always maintain secure footing and balance.
- Do not use the equipment if tired or under the influence of drugs, alcohol, or medication.
- This equipment is not intended for use by persons with reduced physical, sensory, or mental capabilities.

General Fuel Safety

- Petrol/fuel/gasoline is extremely flammable – keep clear of naked flames or other ignition sources.
- Do not spill fuel. If you spill fuel, wipe it off the equipment immediately – if fuel gets on your clothing, change clothing.
- Do NOT smoke near fuel or when refuelling.
- Always shut off the engine before refuelling.
- Do NOT refuel a hot engine.
- Open the fuel cap carefully to allow any pressure build-up in the tank to release slowly.
- Always refuel in well-ventilated areas.
- Always check for fuel leakage. If fuel leakage is found, do not start, or run the engine until all leaks are fixed.

General Carbon-Monoxide Safety

- Using a combustion engine indoors **CAN KILL IN MINUTES**. Engine exhaust contains carbon-monoxide – a poison you cannot smell or see.
- Use combustion engines OUTSIDE only, and far away from windows, doors, and vents.

General Equipment Use and Care

- Keep packaging away from children and pets, potential risk of suffocation or choking.
- The equipment is designed for domestic use only.
- Handle the equipment safely and carefully.
- Before use, inspect the equipment for misalignment or binding of moving parts, loose components, damage, or any other condition that may affect its operation. If damaged, have the equipment repaired by an authorised service centre or technician before use.
- Prevent unintentional starting of the equipment - ensure equipment and power switches are in the OFF position before connecting or moving equipment. Do not carry equipment with hands or fingers touching any controls. Remove any tools or other items that are not a part of the equipment from it before starting or switching on.
- Do not force the equipment. Use the correct equipment for your application. Equipment will perform better and be safer when used within its design and usage parameters.
- Use the equipment and accessories etc. in accordance with these instructions, considering working conditions and the work to be performed. Using the equipment for operations different from those intended could result in hazardous situations.
- Always keep equipment components (engines, hoses, handles, controls, frames, housings, guards etc) and accessories (cutting tools, nozzles, bits etc) properly maintained. Keep the equipment clean and, where applicable, properly lubricated.
- Store the equipment out of reach of children or untrained persons. To avoid burns or fire hazards, let the equipment cool completely before transporting or storing. Never place or store the equipment near flammable materials, combustible gases, or liquids etc.
- The equipment is not weather-proof, and should not be stored in direct sunlight, at high ambient temperatures or locations that are damp or humid.
- Do not clean equipment with solvents, flammable liquids, or harsh abrasives.
- For specific equipment safety use and care, see Equipment Safety.

© Thomson

General Electrical Safety

- Inspect electrical equipment, extension cords, power bars, and electrical fittings for damage or wear before each use. Repair or replace damaged equipment immediately.
- Ensure all power sources conform to equipment voltage requirements and are disconnected before connecting or disconnecting equipment.
- When wiring electrically powered equipment, follow all electrical and safety codes.
- Always use a Residual Current Device (RCD) (GFCI) / Earth Leakage Circuit Breaker / Safety Switch when operating this item (electrical items only).
- High voltage / high current power lines may be present. Use extreme caution to avoid contact or interference with power lines. Electrical shock can be fatal.

General Electrical Safety

- Electrically grounded equipment must have an approved cord and plug and be connected to a grounded electrical outlet.
- Do NOT bypass the ON/OFF switch and operate equipment by connecting and disconnecting the electrical cord.
- Do NOT use equipment that has exposed wiring, damaged switches, covers or guards.
- Do NOT use electrical equipment in wet conditions or in damp locations.
- Do NOT use electrical cords to lift, move or carry equipment.
- Do NOT coil or knot electrical cords, and ensure electrical cords are not trip hazards.

General Service Information

- The equipment must be serviced or repaired at authorised service centres by qualified personnel only.
- Replacement parts must be original equipment manufacturer (OEM) to ensure equipment safety is maintained.
- Do NOT attempt any maintenance or repair work not described in this manual.
- After use, the equipment and components may still be hot – allow the equipment to cool and disconnect spark plugs and/or electrical power sources and/or batteries from it before adjusting, changing accessories, or performing repair or maintenance.
- Do NOT adjust while the equipment is running.
- Perform service-related activities in suitable conditions, such as a workshop.
- Replace worn, damaged or missing warning/safety labels immediately.

Child Choking Hazard!



- **WARNING: CHOKING HAZARD - CHILDREN UNDER 8 YRS. CAN CHOKE OR SUFFOCATE ON SMALL PARTS. ADULT SUPERVISION REQUIRED.**
- Carefully inspect anything a baby or child could gain access to, including this product & packaging.
- Dangers include anything of a size that could become stuck or lodged in a baby or child's airway.
- Dangers include things like raw, hard fruit and vegetable pieces, large pieces of meat, bones or sausage skins, popcorn, nuts, hard lollies and corn chips, small magnets and batteries, coins, beads, marbles and small uninflated balloons, broken toys and smaller toys, buttons, keys, and coins. But there are also many more.
- Pay particular attention to accessories, nuts, bolts, screws, washers, caps, covers, loose parts, parts that could be removed or break off, pieces of packaging, staples, tape etc.
- In the case of any doubt, secure the item of concern in an appropriate manner, or completely remove the possibility of access by a baby or child.

© Thomson

Safety Symbols

The product may have safety warning labels attached to it, explained below. Understand the symbols on your product and their meanings. If any stickers become unreadable, unattached etc., replace them.



Flammable Material Hazard
Flammable liquids, gases, or substances etc may present. Avoid ignition sources and open flames. Danger of fire.



Read User Manual
Read and fully understand product safety warnings, operation, procedures etc before using the product.



Use Hand Protection
Wear appropriate hand protection and take due care as the product or use of the product may present hand hazards.



Carbon-Monoxide Hazard
Do not use the product in confined areas or without adequate ventilation. Carbon-monoxide poisoning can be fatal.



Electrocution / Electrical Shock Hazard
High voltage or high current electricity may be present or required by the product. Take due care when handling electrical products, cables, plugs and leads. Electrical shock can be fatal.



Toxic Fumes / Dust Hazard
Using the product or by-products from use may produce fumes, smoke or particles that could be harmful if inhaled. Wear appropriate breathing protection and have adequate ventilation.



Explosive Material Hazard
Combustible liquids, gases, or substances etc may be present. Avoid ignition sources and open flames. Danger of explosion.



Cutting / Amputation Hazard
The product may have blades, edges or mechanical devices that can cause severe cut injury to fingers, limbs etc. Take due care when handling and using the product.



Crush Hazard
The product may have blades, edges or mechanical devices that can cause severe crush injury to fingers, limbs etc. Take due care when handling and using the product.



Single Operator Only
The product must be operated by a single person only. More than one person operating the product may introduce additional hazards.



Use Face Protection
Wear appropriate full-face protection and take due care as the product or use of the product may present face and eye hazards.



Use Foot Protection
Wear appropriate foot protection and take due care as the product or use of the product may present foot hazards.



Use Eye / Ear / Head Protection
Wear appropriate eye and / or ear and / or head protection and take due care as the product or use of the product may present eye, hearing, and head hazards.



Running Hazard
Do not run on or near the product as doing so may present a fall hazard.



Diving Hazard
Do not dive into the product as doing so may present a neck / head injury hazard.



Adult Supervision Required
Always supervise children and other users of a product to prevent drowning or injury.



Skin Penetration / Puncture Hazard
The product may produce pressure, emit liquids or objects that can cause severe injury to fingers, limbs, blood etc. Take due care when handling and using the product.



Hot Surface Hazard
Be aware that the product may produce high temperatures and hot surfaces that can cause burn injuries.



Flying Debris Hazard
Be aware that the product or use of the product may present hazards produced by flying debris. Wear appropriate clothing and protective devices.



Moving Parts Hazard
Be aware that the product contains or uses mechanical devices that move or rotate. Always wait for moving parts to stop fully before handling the product, adjusting, maintenance etc.

© Thomson

 **Carbon-Monoxide Hazard** Do not use the product in confined areas or without adequate ventilation. Carbon-monoxide poisoning can be fatal.	 **Pull Hazard** Be aware that the product contains or uses mechanical devices that can pull in objects and can cause severe injury to fingers, limbs etc. Take due care when handling and using the product.	 **Slope / Fall Injury Hazard** Be aware that using the product on sloping surfaces or in slippery conditions may present additional dangers from falls and contact with blades, moving parts, hot surfaces etc.	 **"Slam Dunk" Warning** Do NOT attempt "slam dunk" manoeuvres as this may result in severe injury due to falling, product breakage or collapse etc.
 **Electrocution / Electrical Shock Hazard - Outdoor** High voltage or high current electricity may be present or required by the product. Do NOT use in rain, damp, or wet conditions. Electrical shock can be fatal.	 **Electrocution / Electrical Shock Hazard - Disconnect** High voltage or high current electricity may be present or required by the product. Always disconnect the product from the electrical supply before handling the product, adjusting, maintenance etc.	 **Power Line Electrocution Hazard** High voltage / high current power lines may be present. Use extreme caution to avoid contact or interference with power lines. Electrical shock can be fatal.	 **"Kick-Back" Hazard** High level of "kick-back" hazard that can cause the machine to suddenly rotate towards operator. Kick-back injury can be fatal.
 **Winch Operator Position Hazard** Do NOT stand between winch and load. Do NOT use winch to move people.	 **Winch Lift Hazard** Do NOT LIFT load vertically. Use machine to PULL only.	 **Cable Hazard** Ensure that load bearing cable is not kinked or knotted.	 **Winch Cable Hazard** Ensure that there is a minimum number of cable coils on winching mechanism.
 **Winch Hook Hazard** Carry hook to load – do NOT throw or run.	 **Flash / Blinding Hazard** Wear appropriate eye protection for welding. Direct exposure to weld arcs may cause permanent eye injury.	 **Laser Hazard** Laser may be in use – do NOT look directly at laser or allow others to.	 **Choking Hazard** Children under 8 yrs. Can choke or suffocate on small parts. Adult supervision required.

© Thomson

Table of Contents

Safety **2**
Safety Symbols 4
Parts Identification **7**
Assembly **8**
Operation **11**
Handle Functions 11
Remote Control 12
Operating Instructions 12
Maintenance **14**
Lithium Battery Care and Maintenance **15**
Top 3 Battery Care Requirements 15
Troubleshooting Guide **17**
Frequently Asked Questions (FAQ) **18**
Specifications **21**

© Thomson

Parts Identification

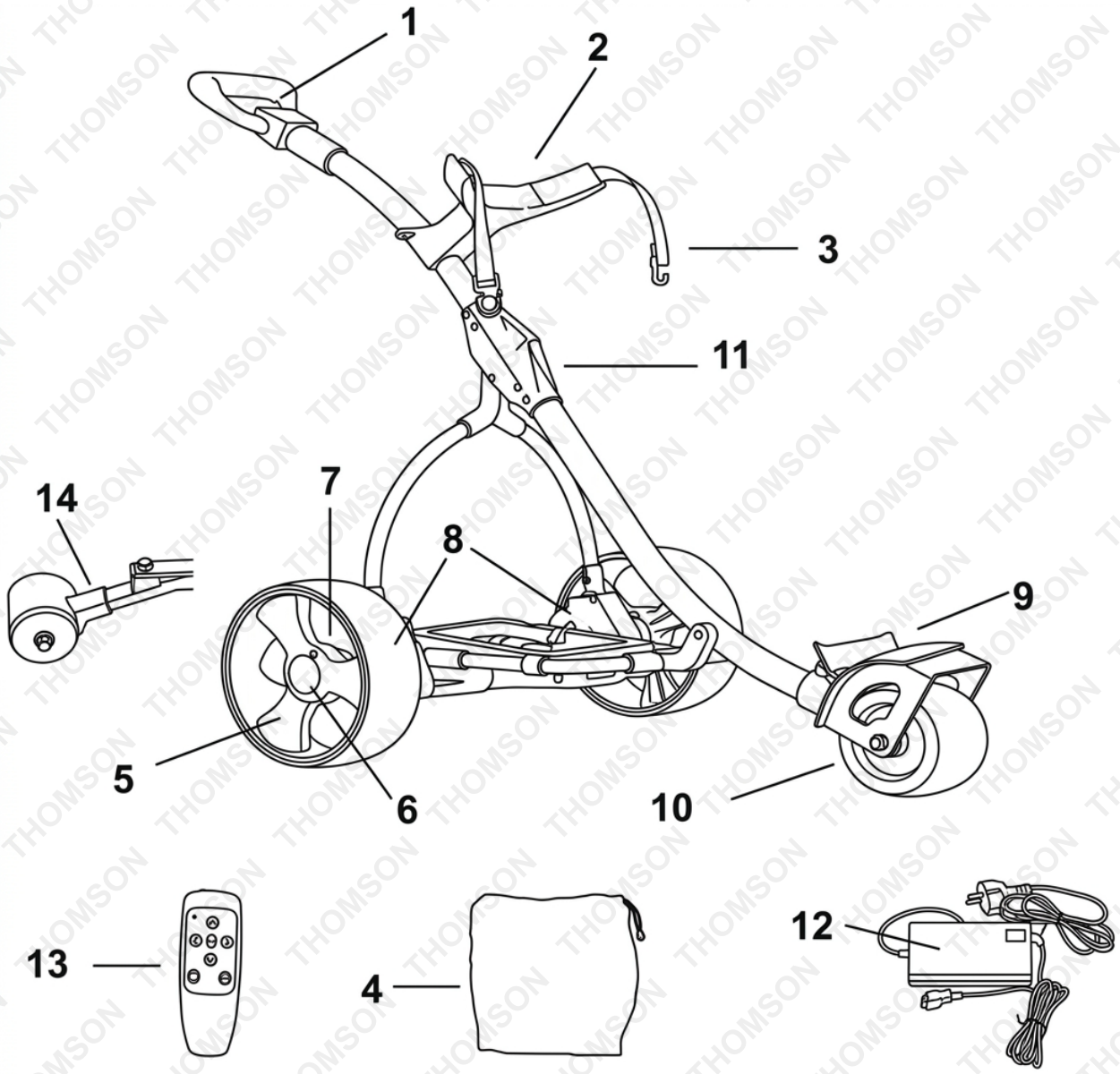

No.	Part	No.	Part
1	Handle	8	Battery Tray
2	Upper Golf Bag Holder	9	Lower Golf Bag Holder
3	Upper Golf Bag Strap	10	Front Wheel
4	Battery	11	Folding Mechanism
5	Rear Wheel	12	Battery Charger
6	Wheel Cap	13	Remote Control
7	Wheel Tyre	14	Anti-Tip Wheel

© Thomson

Assembly

1. Carefully unpack all components and check that all items are included. Some accessories may be packed separately in small packages. Do not discard any packaging until all components have been accounted for.
2. Place the main frame assembly on the floor, taking care not to scratch it on hard surfaces. Unfold the frame and connect the main frame tubes at the joint. Secure the Y-shaped lower support structure to the main frame using the frame locking mechanism.

Unfolding

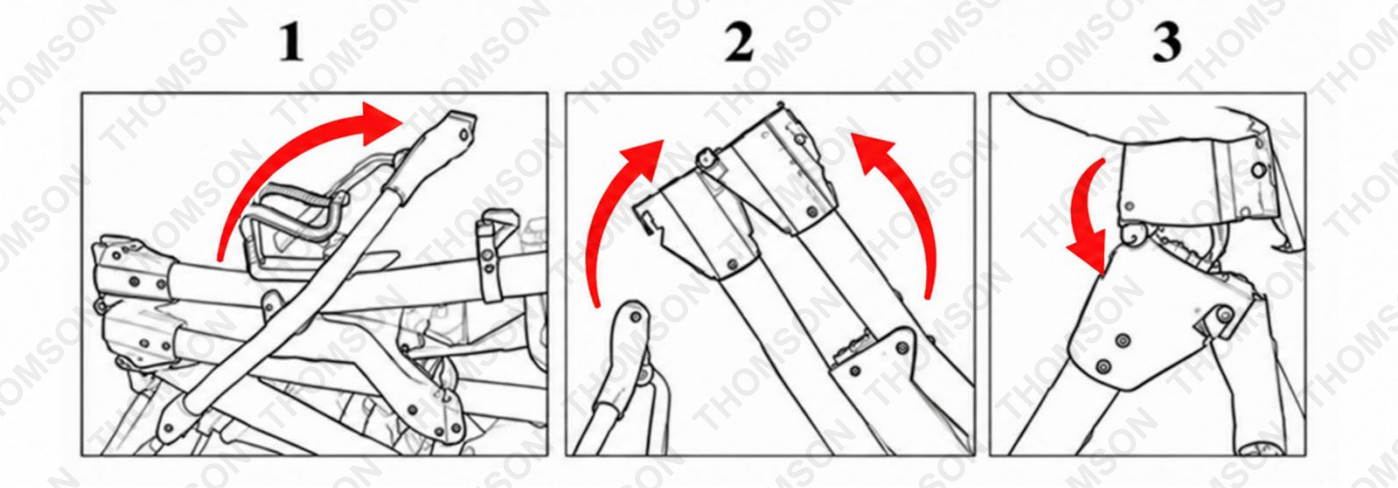

© Thomson

Folding

1

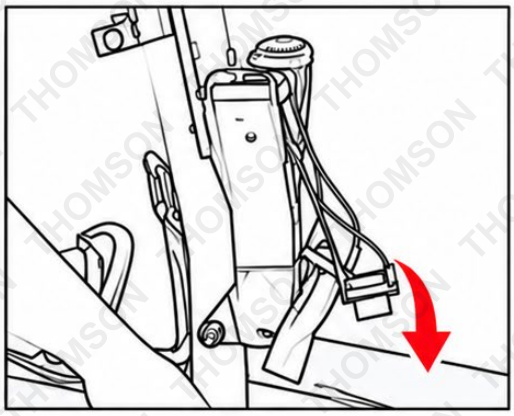

2

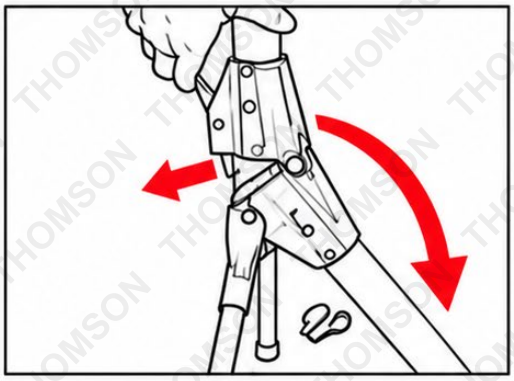

3

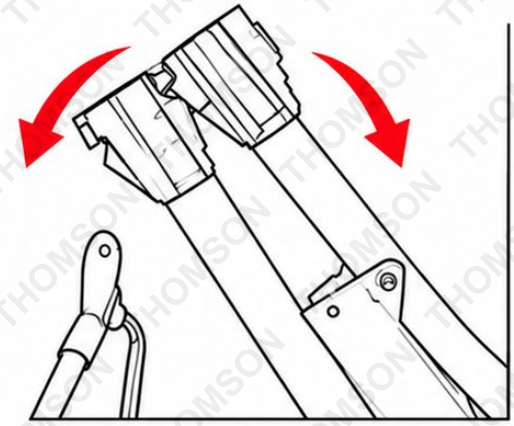

4

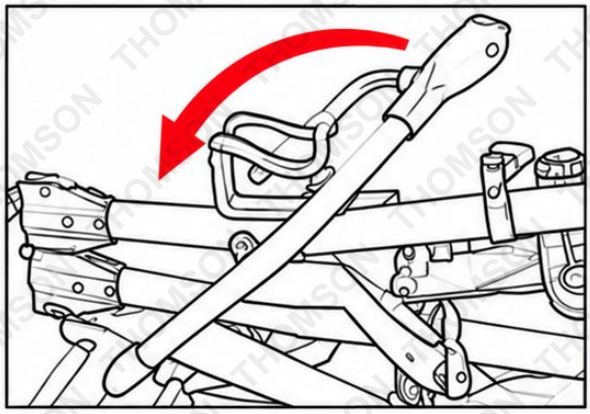

5

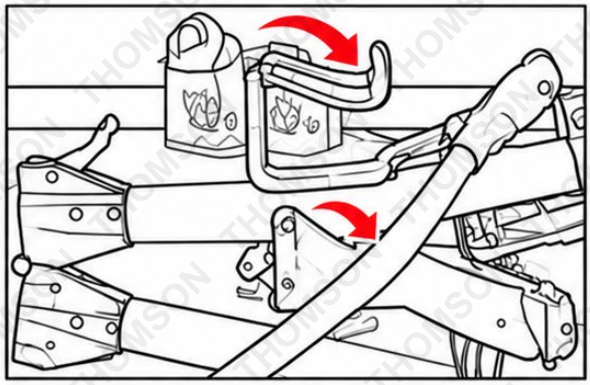

6

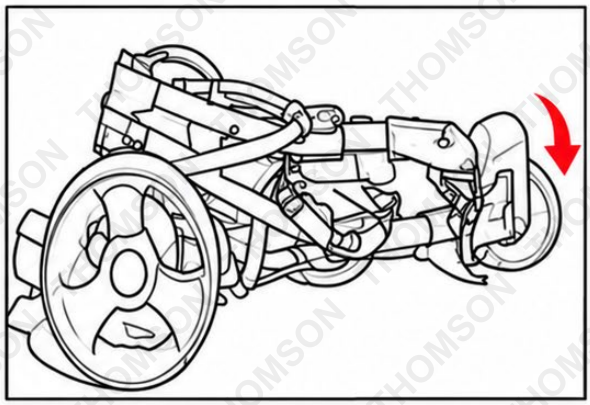

© Thomson

3. Attach the wheels to the axles by pressing and holding the locking button on the outside of each wheel. Slide the wheel fully onto the axle, ensuring that both locking pins engage correctly. Release the button to secure the wheel.

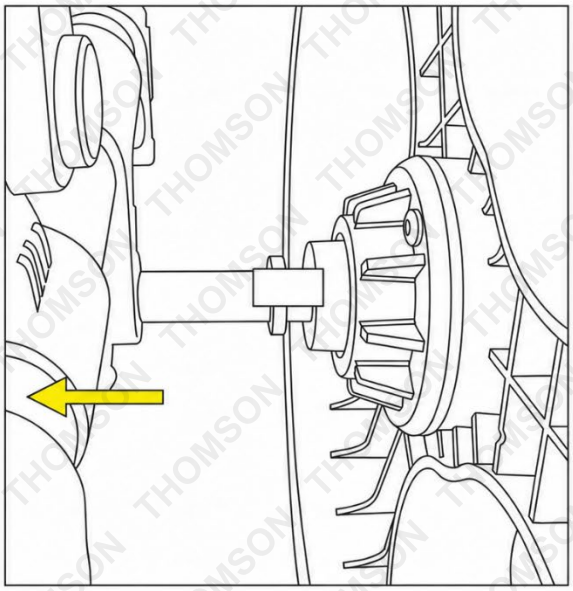

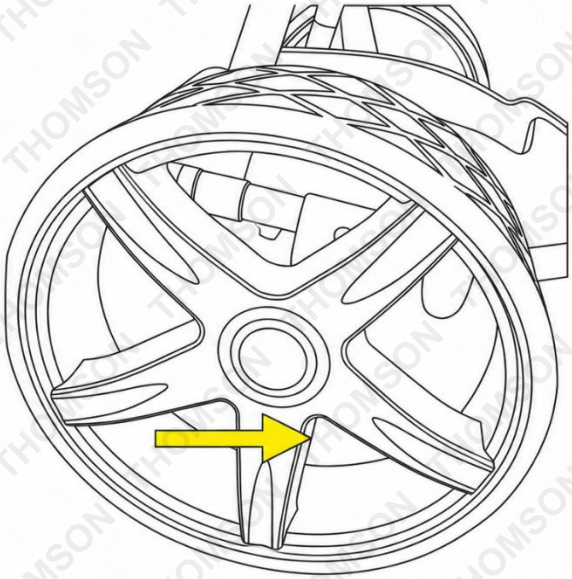

WARNING: Ensure the wheels are securely locked in place. If a wheel is not fully engaged with the clutch, it will not be driven. Check that each wheel is secure by gently pulling it outwards. To remove the wheels, reverse the installation procedure.

If a wheel does not operate correctly, remove it and check whether the axle rotates when the trolley is powered on. If the axle rotates, switch off the trolley and reinstall the wheel, ensuring it is fully engaged.

4. Place the battery pack on the battery tray and secure it firmly using the hook-and-loop strap. Connect the battery plug to the trolley's power socket.
5. Insert the anti-tip wheel into the frame (remote-control model only).

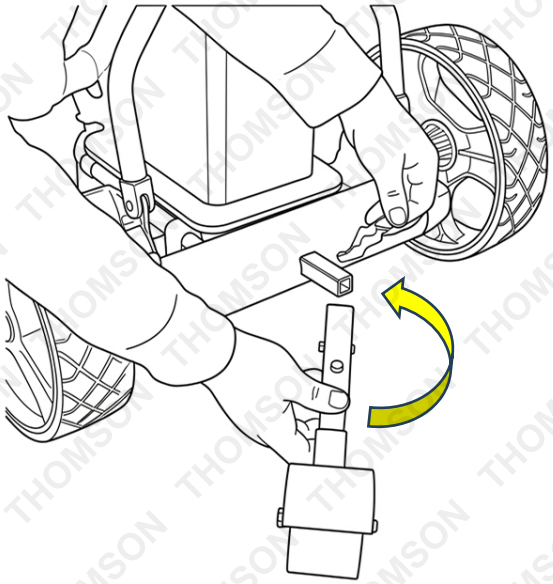

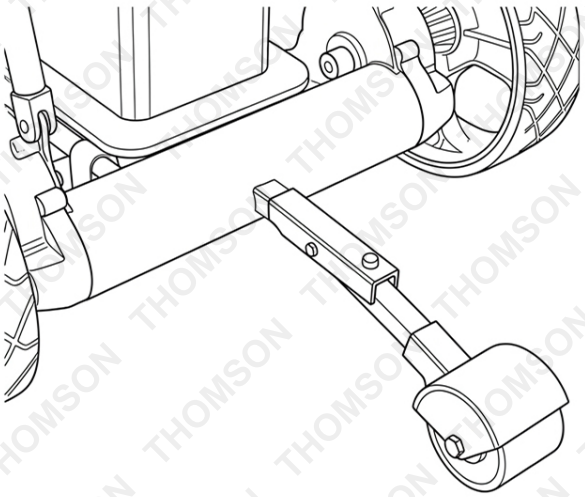

© Thomson

Operation

Handle Functions

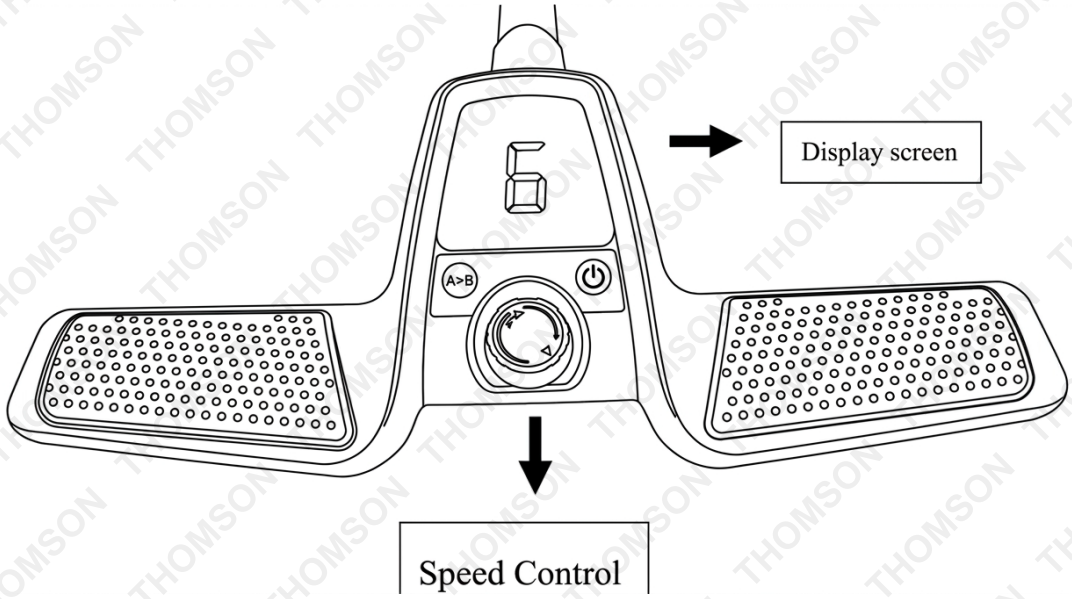

- **Display Screen**: Shows the selected speed level and operating settings.
- **Speed Control**: Adjusts the trolley's speed.

Distance Control Function

Press the **A→B button** to select the distance the trolley will travel before stopping automatically.

- **Press once**: The trolley travels 10 m and stops automatically.
- **Press twice**: The trolley travels 20 m and stops automatically.
- **Press three times**: The trolley travels 30 m and stops automatically.

Cruise and Brake Functions

- **Power ON/OFF and Start/Stop Button**
  - Power ON/OFF: Press and hold the power button for approximately 2 seconds to switch the trolley on or off.
  - Start/Stop: Press the power button once to stop the trolley. Press it again to resume operation.
- **Distance Control and Start/Stop Function**

  When the trolley is operating at a speed level between 1 and 9, the distance control function can be activated.
  - Press the A→B button to select the required travel distance.
  - Press the Start/Stop button to cancel the distance control function. The display will return to the previously selected speed level.
  - Press the Start/Stop button again to resume operation at the previous speed setting.

© Thomson

Speed Control

Rotate the speed control dial to adjust the trolley's speed.

- Select a speed level from 1 to 9.
- The selected speed level will appear on the display.
- Adjust the speed to suit your walking pace and the terrain.

Remote Control

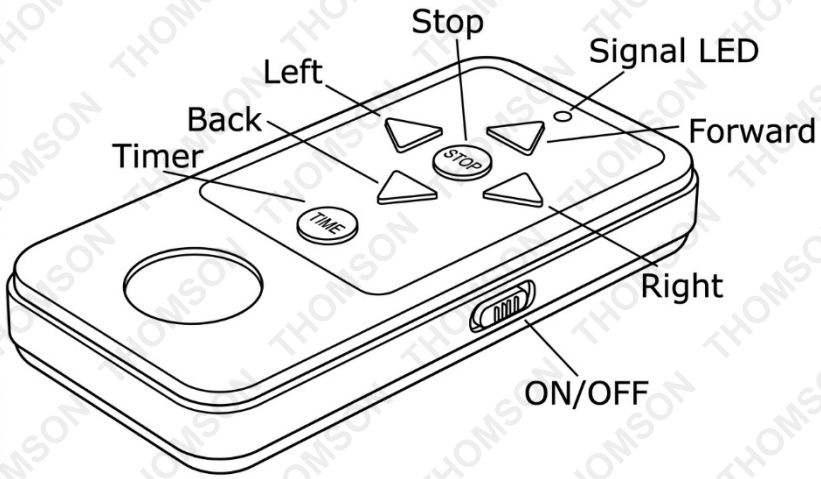

- **Stop Button**: Press the red button in the centre of the directional arrows to stop the golf trolley.
- **Timer Button**: Selects a preset travel distance of 10 m, 20 m or 30 m before the trolley stops automatically. This operates in the same way as the distance control function on the handle.
- **Left Arrow**: Press to turn the trolley left. When released, the trolley stops turning and continues straight ahead at its previous speed.
- **Right Arrow**: Press to turn the trolley right. When released, the trolley stops turning and continues straight ahead at its previous speed.
- **Forward Arrow**: Press to move the trolley forwards. Press repeatedly to increase the speed.
- **Backward Arrow**: Press to move the trolley backwards. Press repeatedly to increase the speed.
- **ON/OFF Switch**: Located on the side of the remote control. Slide the switch to turn the remote control on or off.

Operating Instructions

Operating the Golf Trolley

1. Press the ON/OFF button to switch on the trolley. The battery charge indicator should illuminate.
2. Hold the handle firmly and slowly rotate the speed control dial clockwise using your index finger. The trolley will begin moving forwards.
3. Adjust the speed control dial to match your preferred walking pace.
4. To slow down or stop the trolley, rotate the speed control dial anticlockwise or use the Start/Stop button as described previously.

Battery Use and Care

WARNING: Follow these safety precautions when using and charging the battery.

- Do not charge the battery in a sealed container or upside down. Always charge it in a well-ventilated area.
- Do not charge the battery near heaters, in direct sunlight or in areas where heat may accumulate.
- To extend battery life, avoid fully discharging the battery. Recharge it after each use. If the trolley will not be used for an extended period, follow the manufacturer's recommended maintenance charging schedule.
- The battery terminals are colour-coded: red (+) for positive and black (−) for negative. When replacing the battery, ensure the terminals are connected correctly. Incorrect connections may cause serious damage to the trolley.
- Do not disassemble the battery or dispose of it in a fire. Doing so may cause a fire or explosion.

WARNING: Never touch or short-circuit the battery terminals with metal objects. This may cause electric shock, burns or fire.

Charging the Battery

1. Switch off the trolley before charging.
2. Connect the charger to the battery, then plug the charger into a suitable mains power outlet.
3. Recharge the battery after each round of golf.
4. Charging typically takes 5–10 hours, depending on the battery and charger type.
5. Check the charger's indicator light to determine when charging is complete. The indicator will change colour according to the charger type.
6. Once charging is complete, disconnect the charger from the mains power outlet, then disconnect it from the battery.

Note: Different charger models may have different indicator lights and charging requirements.

Important: Do not extend charging by an additional two hours unless this is specifically recommended for the supplied battery and charger. Avoid leaving the battery connected to the charger longer than recommended.

© Thomson

Maintenance

Regular maintenance will help extend the service life of your golf trolley and ensure reliable performance.

- **Cleaning**: After each round of golf, wipe mud, grass and dirt from the frame, wheels and chassis using a damp cloth or paper towel.
- **Avoid High-Pressure Water**: Do not use high-pressure washers or water jets to clean the trolley, as moisture may enter and damage the electronic components, motors or gearboxes.
- **Wheel Maintenance**: Remove the rear wheels every few weeks and clear any dirt or debris that could restrict wheel movement. Apply a suitable lubricant to moving parts where necessary, following the manufacturer's recommendations.
- **Regular Inspection**: Thoroughly inspect the trolley at least once a year for signs of wear or damage. If any issues are identified, contact an authorised service centre for inspection or repairs. Regular servicing will help maintain optimal performance.
- **Battery Storage**: Always disconnect the battery before storing the trolley. Ensure the trolley is fully assembled before reconnecting the battery. If the trolley will not be used for a month or longer, store the battery in a cool, dry, well-ventilated area, away from direct sunlight and extreme temperatures. Follow the manufacturer's recommended maintenance charging schedule.

Following these maintenance guidelines will help keep your golf trolley in good working condition and extend its service life.

© Thomson

Lithium Battery Care and Maintenance

Top 3 Battery Care Requirements

1. **Charge battery before first use**. The battery may arrive with some charge, regardless of this the battery must be charged for 5–10 hours on the initial charge and 5–10 hours for each subsequent charge.
2. **Charge battery immediately when it is depleted.** Do not store a depleted battery. This will permanently impact the life of the battery. If the battery is going to be stored for a period of time, fully charge the battery before storing.
3. **Disconnect battery when not in use**. To prolong the life of a battery, disconnect it from the unit when not in use. Disconnect chargers from the battery once charged.

To ensure the battery maintains optimum performance, follow the guidelines outlined below.

- For best results, charge batteries in temperatures between 10°C and 30°C
- When battery is charged, disconnect the charger from the power supply and remove the battery from the charger.
- If a battery is stored or otherwise unused for an extended period, and the battery has no charge remaining when you check it, consider it to be damaged. Do not attempt to recharge it or to use it. Replace it with a new battery.
- Use only with the battery charger specified by the manufacturer.
- Ensure that the battery charger electrical cord is not subjected to damage or stress. Do not operate the battery charger if it has a damaged electrical cord or plug.
- Do not use the charger in wet areas or expose it to rain or water.
- The typical estimated life of a Lithium-Ion battery is about two to three years or 300 to 500 charge cycles, whichever occurs first. One charge cycle is a period of use from fully charged, to fully discharged, and fully recharged again.
- Explosion hazard – protect the battery against heat, for example, direct sunlight and fire. Do not store batteries in vehicles or locations subject to heat.
- Batteries can explode in the presence of an ignition source, such as a pilot light. To reduce the risk of serious personal injury, never use any cordless product in the presence of open flame. Exploding batteries can propel debris and chemicals.
- Do not open the battery – danger of short-circuiting and/or explosion.
- Do not attempt to destroy or disassemble the battery pack or remove any of its components.
- Do not touch the battery terminals with metal objects and/or body parts as short-circuit and/or personal injury may result.
- Explosion hazard – do not open and/or short-circuit the battery.
- Poison hazard – battery leakage (liquid ejection). Under extreme conditions, liquid may be ejected from the battery – avoid contact. If contact accidentally occurs, immediately seek medical attention, and flush with water. If liquid contacts eyes, immediately seek medical attention, flush with clean water for at least 10 minutes. Liquid ejected from the battery may cause irritation or burns.
- Dispose of non-serviceable batteries in an environmentally responsible manner and according to local regulations.

Failure to adhere to the requirements above may result in the battery becoming inoperative or battery life being reduced. In extreme cases or abuse, battery overheating, or fire may result.

© Thomson

DANGER - BATTERY CHARGING, USE AND STORAGE

Like mobile phones, laptops, cordless vacuum cleaners etc, this product may contain or be related to a lithium ion battery pack (lithium ion batteries and lithium ion battery related items only). Lithium ion batteries allow fast charging and high capacities, however care must be taken to reduce chances of a fault, and increase safety in case a fault occurs. Catastrophic incidents involving lithium ion batteries have a tendency to result in large amounts of smoke and fire. Be sure to follow the points below to reduce the likelihood of danger whenever you use, charge or store any lithium ion battery.

- Never charge a battery that has been damaged or subjected to a forceful impact.
- Never charge a battery that has been exposed to moisture or water.
- Never charge a battery with a charger that wasn't supplied with the battery.
- Never use a battery in a device that it wasn't specifically designed for.
- Never use a battery with a modified or damaged device.
- Never modify the battery, product, charger, circuitry or wiring.
- Never charge a battery in an exit path that may be used by people to leave a room or building in case of an emergency, for example, the hallway or foyer of a residence.
- Never charge a battery in an area or building that doesn't have the recommended number of working smoke detectors that have been tested in accordance with local guidelines.
- Never charge a battery when the battery or charger is displaying a problem or charging incorrectly.
- Always charge batteries on a non-combustible surface, for example, on a concrete floor.
- Always charge batteries at least 3m away from anything combustible, such as floors, wall surfaces, furniture, storage shelves etc.
- Always charge batteries in an open area (outside if possible) ensuring the battery and charger are away from moisture and water.
- Always disconnect batteries from the charger after charging.
- Always remove or disconnect batteries from the device/product when not in use.
- Always ensure batteries are charged under adult supervision. Do not charge unattended. Do not charge batteries while no one is home or while people are sleeping.
- Keep batteries away from heat and moisture.
- Damaged batteries should be disposed of through your local e-waste collection service.
- Avoid mixing and matching chargers. Unplug products when fully charged, and charge batteries in a cool, dry place away from combustible materials like beds, lounges, or carpet.
- During charging and use, check your lithium-ion batteries for overheating, signs of swelling, leaking, or venting gas. Immediately stop using your product if these signs are present.
- Allow batteries to cool after use and before charging.

Troubleshooting Guide

Problem	Possible Solution
Trolley Has No Power	▪ Check all wiring connections and plugs. ▪ Check the battery charge level. ▪ Ensure the wheels and clutches are correctly installed and functioning.
Motor Runs but Wheels Do Not Turn	▪ Check that the wheels are securely attached to the axles using the locking pins. ▪ Ensure the left and right wheels are correctly positioned.
Trolley Pulls to One Side	▪ Ensure both wheels are correctly fitted over the clutches and locked onto the axles. ▪ Check that the clutch pins are visible on both sides of the axle. ▪ Ensure each clutch rotates freely in one direction only.
Battery Has Insufficient Power	▪ Check all battery cable connections. ▪ Ensure the charger is functioning correctly. ▪ Fully recharge the battery. ▪ Avoid completely discharging the battery.
Difficulty Attaching Wheels	▪ Remove the outer wheel cap and check the quick-release mechanism. ▪ Adjust the quick-release catch as necessary to ensure the wheel locks securely onto the axle.

WARNING: Always switch off the trolley and disconnect the battery before inspecting, adjusting or removing the wheels. Do not operate the trolley if the wheels or locking mechanisms are damaged or cannot be secured properly.

© Thomson

Frequently Asked Questions (FAQ)

The following answers address common questions about operating, maintaining and troubleshooting your golf trolley.

Should I Charge the Battery Before First Use?

Yes. The battery is supplied partially or substantially charged. Before first use, fully charge the battery using the supplied charger, following the manufacturer's instructions.

During charging, the indicator may flash green or display a red light. A steady green light generally indicates that charging is complete. Indicator colours may vary depending on the charger model.

The battery may reach its optimal performance after several charging cycles.

How Long Does the Battery Last?

The battery can typically provide enough power for up to 36 holes or approximately 8–10 hours of operation per charge.

Actual battery life depends on the terrain, golf bag weight, battery condition and operating conditions.

For optimal performance and battery longevity, recharge the battery after every 18 holes. Avoid fully discharging the battery, as this can shorten its service life.

What Do the Indicator Lights on the Handle Mean?

The red, yellow and green LED indicators show the battery charge level.

- All three lights illuminated: Battery is fully charged.
- Green light off: Battery charge is decreasing.
- Yellow light off: Battery charge is low.
- Red light only: Recharge the battery as soon as possible.

Why Does My Golf Trolley Have No Power?

Check that all electrical connections are secure and the battery is sufficiently charged.

Inspect the fuse located in the red battery cable inside the battery carrying case. If the fuse has blown, replace it with a fuse of the same type and rating.

WARNING: Switch off the trolley and disconnect the battery before inspecting or replacing the fuse. The original instructions specify a 36 A automotive fuse. Confirm this rating against the fitted fuse or product specifications before replacement.

© Thomson

Why Does My Golf Trolley Pull to One Side?

Uneven weight distribution or sloping terrain may cause the trolley to pull to one side.

1. Ensure the golf bag is evenly balanced on the trolley.
2. Test the trolley without the golf bag on flat, level ground.
3. If the trolley continues to pull to one side, adjust the front wheel alignment.
4. Loosen the axle screw and tracking adjustment rod located on the right side of the front wheel.
5. Adjust the wheel position as required.
6. Retighten the screws securely and test the trolley again.

Will My Golf Trolley Interfere With Other Remote-Controlled Trolleys?

The remote-control system is designed to minimise interference between trolleys operating nearby.

However, interference may still occur under certain conditions. Maintain control of your trolley and ensure it responds correctly to remote commands.

How Do I Pair a Replacement Remote Control?

To pair a replacement remote control with the trolley:

1. Switch on the trolley.
2. Point the replacement remote control towards the trolley.
3. Press and hold either the Forward or Backward button for approximately 5–10 seconds.
4. Release the button when the trolley responds, indicating that pairing has been completed.

WARNING: Perform pairing in a clear, open area, away from people and obstacles, as the trolley may move during the process.

Why Does the Manual Control Work but Not the Remote Control?

1. Ensure the speed control dial is in the OFF or STOP position.
2. Check that the remote control is switched on.
3. Inspect the remote control batteries and replace them if necessary.
4. Ensure the batteries are correctly installed and are of the specified type.
5. If the remote control still does not work, contact an authorised service centre.

Note: Do not disassemble or modify the remote control unless instructed by an authorised technician.

Why Does the Trolley Respond Poorly to the Remote Control?

Check that the remote control batteries are correctly installed and have sufficient charge.

Ensure the trolley is within the remote control's operating range and that there are no significant obstructions or sources of interference between the remote control and the trolley.

© Thomson

Why Does the Trolley Occasionally Stop by Itself?

The trolley may stop automatically for several reasons:

- **Low battery charge**: The controller may shut down when the battery voltage becomes too low.
- **Overheating**: The controller may activate its protective shutdown function if it overheats.
- **Signal loss**: The trolley may stop if no remote-control signal is received for approximately 30–40 seconds.

Check the battery charge level and allow the trolley to cool if necessary. If the problem persists, contact an authorised service centre.

Who Should I Contact for Servicing, Spare Parts or Technical Support?

For servicing, replacement parts or technical assistance, contact the manufacturer or an authorised service centre.

Provide the trolley's model number, purchase details and a description of the issue to help the service team assist you.

© Thomson

Specifications

Frame Material	Aluminium Alloy
Motor Power	Dual 200 W Motors
Maximum Speed	Up to 8 km/h
Battery Type	14.4 V 20.8 A Lithium Battery
Travel Distance	Up to 20 km per Charge
Charging Time	5–10 Hours
Maximum Load Capacity	30 kg
Speed Settings	9
Automatic Distance Settings	10 m, 20 m and 30 m
Tyre Type	Solid Rubber
Quick-Release Wheels	Yes
Electronic Brake	Yes
One-Second Folding Mechanism	Yes
Battery Level Display	Yes
Bottle Holder	Yes
Umbrella Holder	Yes
Scorecard Holder	Yes
Ball and Tee Storage	Yes
Assembly Required	Yes

© Thomson

Some experts believe that the incorrect or prolonged use of almost any product may cause serious injury or death. To help reduce your risk of serious injury or death, refer to the information below. For more information, see www.datastreamserver.com/safety

- Consult all documentation, packaging, and product labelling before use. Note that some products feature documentation available online. It is recommended to print and retain the documentation.
- Before each use, check the product for loose/broken/damaged/missing parts, wear, or leaks (if applicable). Never use a product with loose/broken/damaged/missing parts, wear, or leaks.
- Products must be inspected and serviced (if applicable) by a qualified technician every 6 months. This is based on average residential use by persons of average size and strength, and on a property of average metropolitan size. Use beyond these recommendations may require more frequent inspections/servicing.
- Ensure that all users of the product have completed a suitable industry recognised training course before being allowed access to the product.
- The product has been supplied by a general merchandise retailer that may not be familiar with your specific application or description of application. Be sure to attain third-party approval from a qualified specialist for your application before use, regardless of any assurances from the retailer or its representatives.
- This product is not intended for use where fail-safe operation is required. As with any product (for example, automobile, computer, toaster), there is the possibility of technical issues that may require the repair or replacement of parts, or the product itself. If the possibility of such failure and the associated time it may take to rectify could in any way inconvenience the user, business, or employee, or financially affect the user, business, or employee, then the product is not suitable for your requirements. This product is not intended for use where incorrect operation or a failure of any kind, including but not limited to, a condition requiring product return, replacement, parts replacement, or service by a technician may cause financial loss, loss of employee time or an inconvenience requiring compensation.
- If this product has been purchased in error when considering the information presented here, contact the retailer directly for details of their returns policy, if required.

edisons.com.au

© Thomson. All rights reserved. No part of this document, including descriptive content, concepts, ideas, diagrams, or images may be reproduced or transmitted in any form or by any means, electronic or mechanical, including photocopying, scanning, or recording, or any information storage and retrieval system, without express permission or consent from the publisher.