Form No. 3470-917 Rev B

TORO®

Count on it.

Operator's Manual

Sand Pro® 3040 and 5040 Traction Unit

Model No. 08743—Serial No. 418500000 and Up
Model No. 08745—Serial No. 418500000 and Up

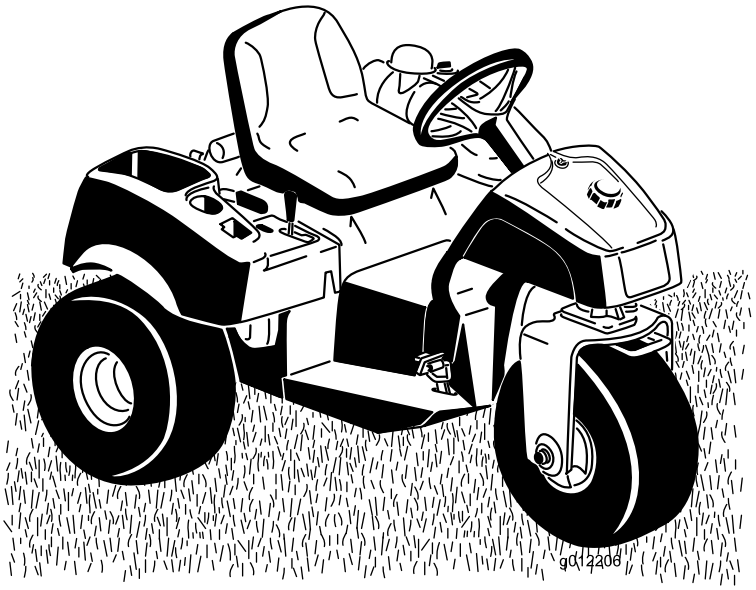

Register at www.Toro.com.
Original Instructions (EN)

CE UK CA

3470-917

This product complies with all relevant European directives; for details, please see the separate product specific Declaration of Conformity (DOC) sheet.

It is a violation of California Public Resource Code Section 4442 or 4443 to use or operate the engine on any forest-covered, brush-covered, or grass-covered land unless the engine is equipped with a spark arrester, as defined in Section 4442, maintained in effective working order or the engine is constructed, equipped, and maintained for the prevention of fire.

The enclosed engine owner's manual is supplied for information regarding the US Environmental Protection Agency (EPA) and the California Emission Control Regulation of emission systems, maintenance, and warranty. Replacements may be ordered through the engine manufacturer.

If this machine is equipped with a telematics device, refer to your authorized Toro distributor for instructions to activate the device.

⚠ WARNING

CALIFORNIA
Proposition 65 Warning

The engine exhaust from this product contains chemicals known to the State of California to cause cancer, birth defects, or other reproductive harm.

Battery posts, terminals, and related accessories contain lead and lead compounds, chemicals known to the State of California to cause cancer and reproductive harm. Wash hands after handling.

Use of this product may cause exposure to chemicals known to the State of California to cause cancer, birth defects, or other reproductive harm.

Introduction

This machine is a ride-on piece of utility equipment intended to be used by professional, hired operators in commercial applications. It is primarily designed for conditioning sand traps on well-maintained golf courses and commercial grounds. Using this product for purposes other than its intended use could prove dangerous to you and bystanders.

Read this information carefully to learn how to operate and maintain your product properly and to avoid injury and product damage. You are responsible for operating the product properly and safely.

Visit www.Toro.com for product safety and operation training materials, accessory information, help finding a dealer, or to register your product.

Whenever you need service, genuine Toro parts, or additional information, contact an Authorized Service Dealer or Toro Customer Service and have the model and serial numbers of your product ready. Figure 1 identifies the location of the model and serial numbers on the product. Write the numbers in the space provided.

Important: **With your mobile device, you can scan the QR code (if equipped) on the serial number decal to access warranty, parts, and other product information.**

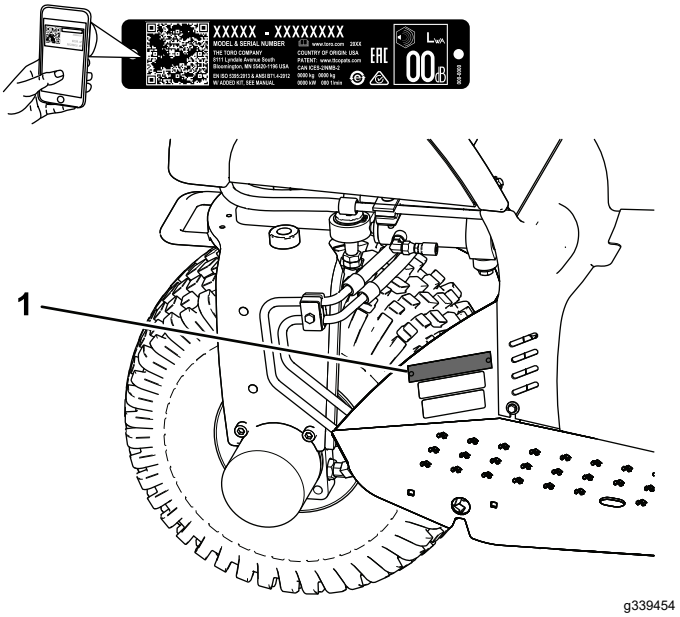

Figure 1

1. Model and serial number location

Model No. _____

Serial No. _____

© 2025—The Toro® Company
8111 Lyndale Avenue South
Bloomington, MN 55420

Contact us at www.Toro.com.
Printed in the USA
All Rights Reserved

This manual identifies potential hazards and has safety messages identified by the safety-alert symbol (Figure 2), which signals a hazard that may cause serious injury or death if you do not follow the recommended precautions.



g000502

Figure 2
Safety-alert symbol

This manual uses 2 words to highlight information. **Important** calls attention to special mechanical information and **Note** emphasizes general information worthy of special attention.

Contents

Safety 4
General Safety 4
Safety and Instructional Decals 4
Setup 7
1 Installing the Steering Wheel 8
2 Installing the Seat 8
3 Installing the Battery 8
4 Installing the Front Weights 10
5 Applying the Production Year Decal and CE Decal 10
Product Overview 11
Controls 11
Specifications 13
Attachments/Accessories 13
Before Operation 14
Before Operation Safety 14
Filling the Fuel Tank 14
Before Operations Checks 15
Checking the Interlock System 15
During Operation 16
General Safety 16
Slope Safety 16
Starting and Shutting Off the Engine 17
Breaking in the Machine 17
Becoming Familiar with the Machine 17
After Operation 18
After Operation Safety 18
Towing the Machine 18
Hauling the Machine 18
Maintenance 19
Maintenance Safety 19
Recommended Maintenance Schedule(s) 19
Daily Maintenance Checklist 20
Pre-Maintenance Procedures 21
Lifting the Machine 21
Lubrication 22
Greasing the Machine 22
Engine Maintenance 23
Engine Safety 23
Engine Oil Specification 23
Checking the Engine-Oil Level 23
Changing the Engine Oil and Filter 24
Servicing the Air Cleaner 25
Replacing the Spark Plugs 26
Fuel System Maintenance 26
Replacing the Fuel Filter 26
Changing the Carbon-Canister Filter 27
Electrical System Maintenance 28
Electrical System Safety 28
Jump-Starting the Machine 28
Replacing Fuses 28
Maintaining the Battery 28
Drive System Maintenance 29
Checking the Tire Pressure 29
Torquing the Wheel Lug Nuts 29
Adjusting the Transport Speed 29
Controls System Maintenance 30
Adjusting the Lift Lever 30
Hydraulic System Maintenance 31
Hydraulic System Safety 31
Checking the Hydraulic Lines and Hoses 31
Hydraulic Fluid Specifications 31
Checking the Hydraulic-Fluid Level 32
Replacing the Hydraulic Filter 33
Changing the Hydraulic Fluid 33
Cleaning 34
Cleaning and Inspecting the Machine 34
Cleaning the Oil Cooler 34
Storage 35
Preparing the Machine 35
Preparing the Engine 35
Preparing the Battery 35

Safety

General Safety

This product is capable of causing personal injury. Always follow all safety instructions to avoid serious personal injury.

- Read and understand the contents of this *Operator's Manual* before starting the engine. Ensure that everyone using this product knows how to use it and understands the warnings.
- Use your full attention while operating the machine. Do not engage in any activity that causes distractions; otherwise, injury or property damage may occur.
- Do not put your hands or feet near moving components of the machine.
- Do not operate the machine without all guards and other safety protective devices in place and working on the machine.
- Keep the machine away from bystanders while it is moving.
- Keep children out of the operating area. Never allow children to operate the machine.
- Stop the machine and shut off the engine before servicing or fueling the machine.

Improperly using or maintaining this machine can result in injury. To reduce the potential for injury, comply with these safety instructions and always pay attention to the safety-alert symbol ⚠, which means Caution, Warning, or Danger—personal safety instruction. Failure to comply with these instructions may result in personal injury or death.

Safety and Instructional Decals

Safety decals and instructions are easily visible to the operator and are located near any area of potential danger. Replace any decal that is damaged or missing.

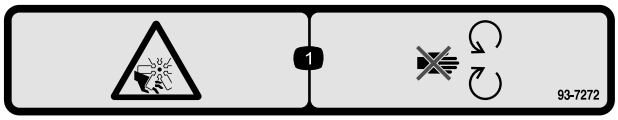

decal93-7272

93-7272

1. Cutting/dismemberment hazard; fan—stay away from moving parts.



decal93-9051

93-9051

1. Read the *Operator's Manual.*



decalbatterysymbols

Battery Symbols

Some or all of these symbols are on your battery.

1. Explosion hazard
2. No fire, open flame, or smoking
3. Caustic liquid/chemical burn hazard
4. Wear eye protection.
5. Read the *Operator's Manual*.
6. Keep bystanders away from the battery.
7. Wear eye protection; explosive gases can cause blindness and other injuries.
8. Battery acid can cause blindness or severe burns.
9. Flush eyes immediately with water and get medical help fast.
10. Contains lead; do not discard

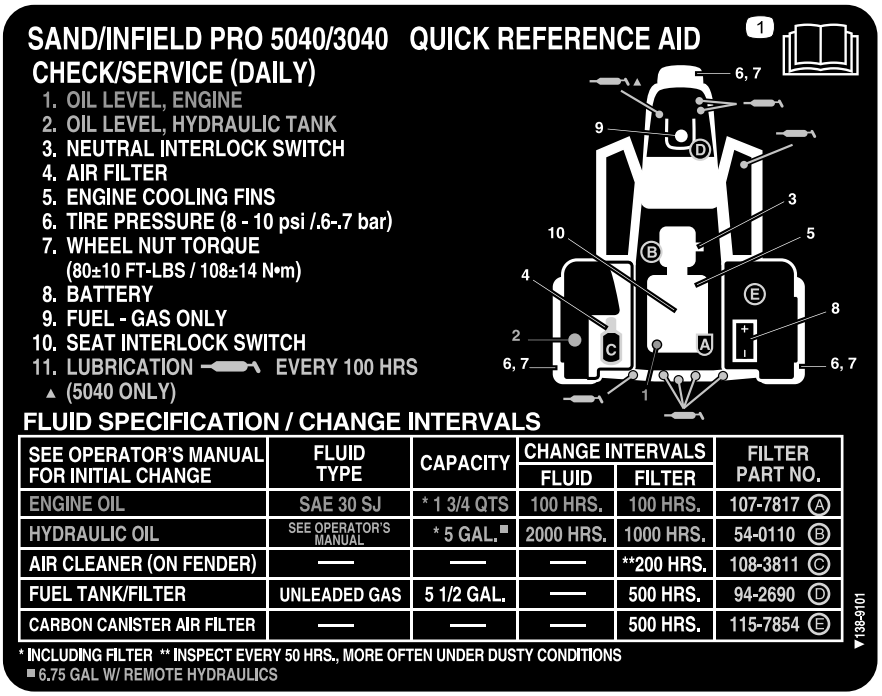

decal138-9101

138-9101

1. Read the *Operator's Manual* before performing maintenance.

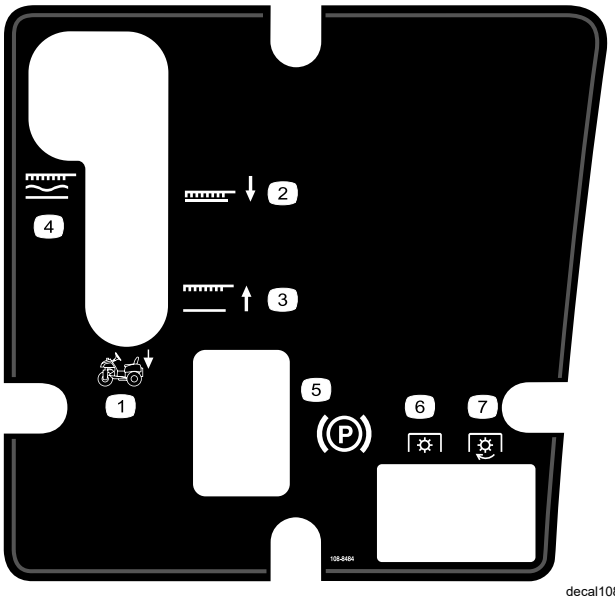

decal108-8484

108-8484

1. Attachment control
2. Attachment lower position
3. Attachment raise position
4. Attachment, locked in float position
5. Parking brake
6. PTO—disengaged
7. PTO—engaged



decal133-8062

133-8062

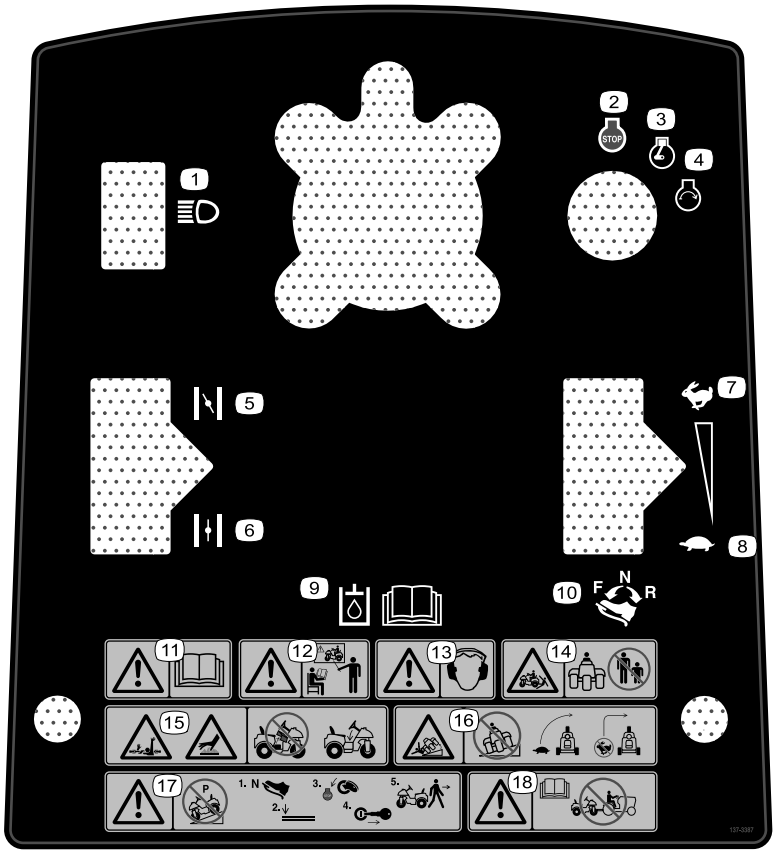

decal137-3387

137-3387

1. Lights
2. Engine—Shut off
3. Engine—Run
4. Engine—Start
5. Choke–On
6. Choke—Off
7. Fast
8. Slow
9. Read the *Operator's Manual* for hydraulic fluid information.
10. Traction control—Forward, Neutral, and Reverse
11. Warning—read the *Operator's Manual*.
12. Warning—do not operate this machine unless you are trained.
13. Warning—wear hearing protection.
14. Crushing hazard, machine—keep bystanders away.
15. Entanglement hazard, driveshaft; hot surface/burn hazard—do not remove cover.
16. Tipping hazard—do not operate on slopes; drive slowly when turning; do not turn sharply while traveling fast.
17. Warning—do not park the machine on a slope; park the machine on a level surface, shut off the engine, and remove the key before leaving the machine.
18. Warning—read the *Operator's Manual*; do not tow the machine.

Setup

Loose Parts

Use the chart below to verify that all parts have been shipped.

Procedure	Description	Qty.	Use
1	Steering wheel Foam collar Washer Locknut Steering-wheel cover	1 1 1 1 1	Install the steering wheel.
2	Seat	1	Install the seat.
3	Bolt (1/4 x 5/8 inch) Locknut (1/4 inch)	2 2	Install the battery
4	Front weight kit(s) as needed	–	Install the front weights if needed.
5	Production year decal CE decal	1 1	Apply the production year decal and the CE decal.

Media and Additional Parts

Description	Qty.	Use
Operator's Manual Engine owner’s manual	1 1	Read the manuals before operating the machine.
Certificate of Compliance	1	This document indicates CE compliance.
Key	2	Start the engine.

Note: Determine the left and right sides of the machine from the normal operating position.

Note: Remove and discard all the shipping brackets and fasteners.

1

Installing the Steering Wheel

Parts needed for this procedure:

1	Steering wheel
1	Foam collar
1	Washer
1	Locknut
1	Steering-wheel cover

Procedure

1. Move the front wheel so that it points straight ahead.
2. Slide the foam collar, small end first, onto the steering shaft (Figure 3).

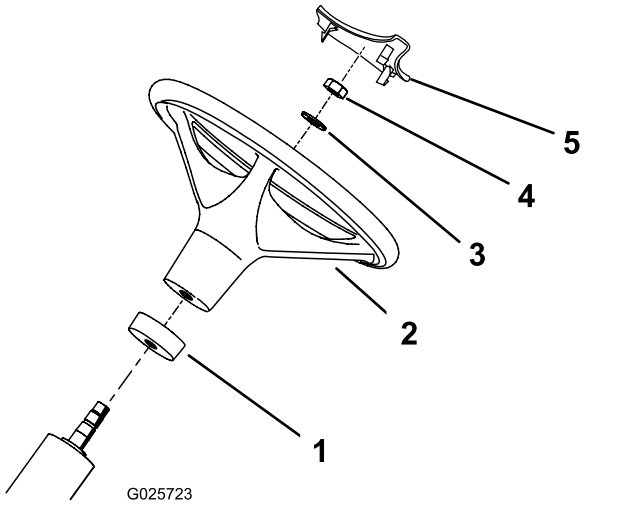

g025723

Figure 3

1. Foam collar
2. Steering wheel
3. Washer
4. Nut
5. Steering-wheel cover

3. Slide the steering wheel onto the steering shaft (Figure 3).
4. Secure the steering wheel to the steering shaft with a washer and a locknut (Figure 3).
5. Torque the locknut to 27 to 35 N·m (20 to 26 ft-lb).
6. Press the steering-wheel cover into position on the steering wheel (Figure 3).

2

Installing the Seat

Parts needed for this procedure:

1	Seat

Procedure

1. Remove and discard the lag bolts securing the seat to the crate.
2. Remove the nuts from the shipping bracket and discard the bracket. Save the nuts.
3. Secure the seat to the seat base with the 4 previously removed nuts; refer to Figure 4.

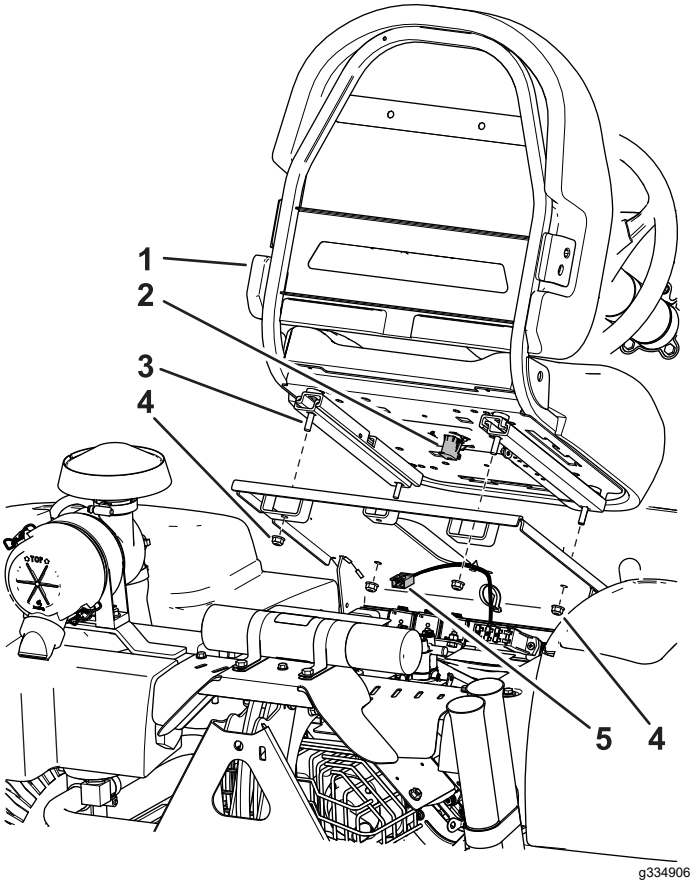

Figure 4

1. Seat
2. Seat switch
3. Seat bolts
4. Flange nut
5. Machine wire harness

4. Locate the machine wire harness and connect it to the seat switch (Figure 4).
5. Secure the wire harness to the seat base with a cable tie.

3

Installing the Battery

Parts needed for this procedure:

2	Bolt (1/4 x 5/8 inch)
2	Locknut (1/4 inch)

Procedure

1. Set the battery in place in the tray behind the right wheel, with the negative terminal positioned to the rear of the machine (Figure 5).

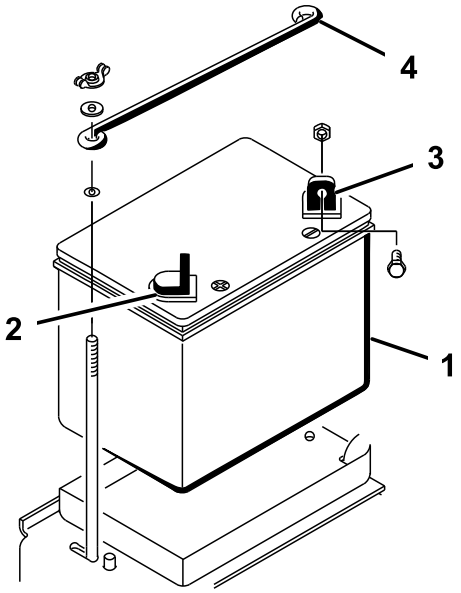

g351419

Figure 5

1. Battery
2. Positive (+) battery terminal
3. Negative (-) battery terminal
4. Top battery hold-down

⚠ WARNING

Incorrect battery cable routing could damage the machine and cables and cause sparks. Sparks can cause the battery gasses to explode, resulting in personal injury.

- **Always disconnect the negative (black) battery cable before disconnecting the positive (red) cable.**
- **Always connect the positive (red) battery cable before connecting the negative (black) cable.**

⚠ WARNING

Battery terminals or metal tools could short against metal machine components, causing sparks. Sparks can cause the battery gasses to explode, resulting in personal injury.

- **When removing or installing the battery, do not allow the battery terminals to touch any metal parts of the machine.**
- **Do not allow metal tools to short between the battery terminals and metal parts of the machine.**

2. Secure the positive cable (red) to the positive (+) terminal with a bolt (1/4 x 5/8 inch) and a locknut (Figure 6).

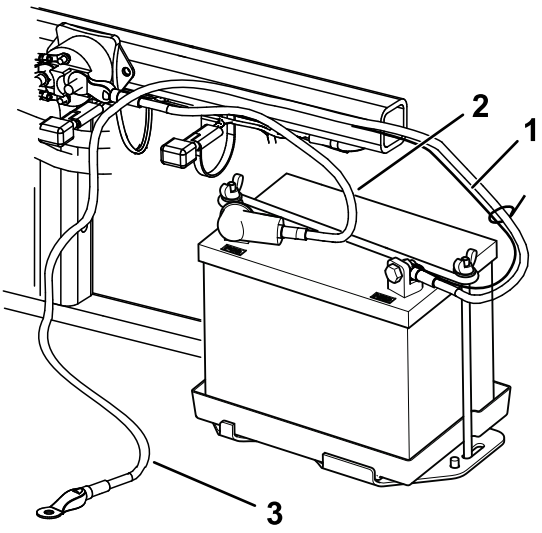

g351421

Figure 6

1. Small black cable
2. Positive (+) battery cable
3. Negative (-) battery cable

3. Secure the small black wire and the negative cable (black) to the negative (-) terminal of the battery with a bolt (1/4 x 5/8 inch) and locknut (1/4 inch) (Figure 6).
4. Coat the terminals and mounting fasteners with petroleum jelly to prevent corrosion.
5. Slide the rubber boot over the positive (+) terminal to prevent a possible short from occurring.
6. Install the top battery hold-down to the side battery hold-downs and secure it with the washers and wing nuts.

4

Installing the Front Weights

Parts needed for this procedure:

–	Front weight kit(s) as needed

Procedure

For added traction performance, the Weight Kit (100-6442) can be added to the front of the machine.

Note: If the machine is fitted with a front lift or plow attachment, the Weight Kit will not fit due to physical interference.

1. Use the chart below to determine the combinations of additional weight required. Order parts from your authorized Toro distributor.

Attachment	Weight Required	Weight Kit	Kit Quantity
Spiker Kit	23 kg (50 lb)	Part No. 100-6442	1
Rahn Groomer			

Note: For Model 08745 machines, do not install the weight kit if your machine is equipped with the front lift frame kit.

2. Install the weight kit; refer to the *Installation Instructions* for the weight kit.

5

Applying the Production Year Decal and CE Decal

CE Only

Parts needed for this procedure:

1	Production year decal
1	CE decal

Procedure

Apply the production year decal and the CE decal to the machine in the area shown (Figure 7).

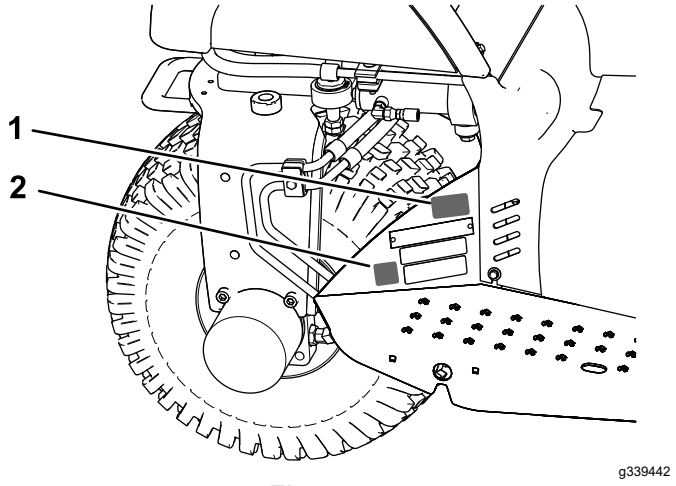

Figure 7

1. Apply the production year decal here.
2. Apply the CE decal here.

Product Overview

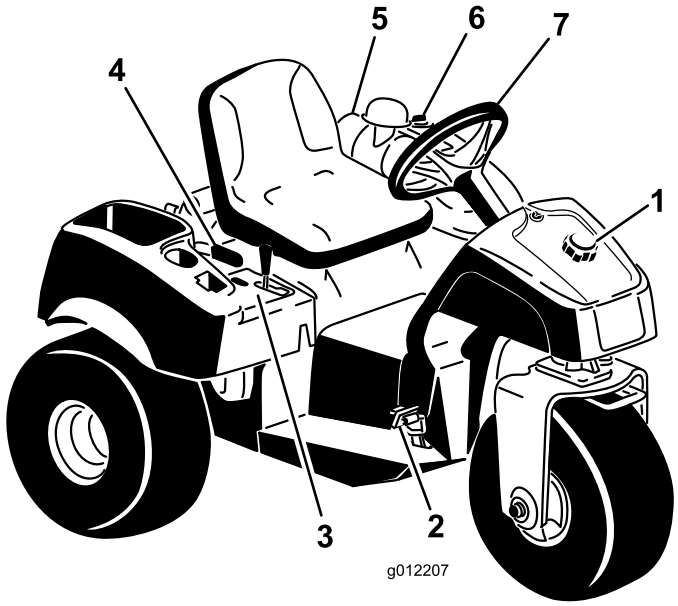

g012207

Figure 8

1. Fuel-tank cap
2. Traction and stopping pedal
3. Control panel
4. Parking lever
5. Air cleaner
6. Hydraulic-tank cap
7. Steering wheel

Controls

Traction and Stopping Pedal

The traction pedal (Figure 9) has 3 functions: to move the machine forward, to move it backward, and to stop the machine. Using the heel and toe of your right foot, press the top of the pedal to move forward and the bottom of the pedal to move backward or to assist in stopping when moving forward (Figure 10). Allow the pedal to move or move it to the NEUTRAL position to stop the machine.

Important: **When driving the machine forward, rest your heel on the footrest; do not rest your heal on the reverse pad of the traction pedal.**

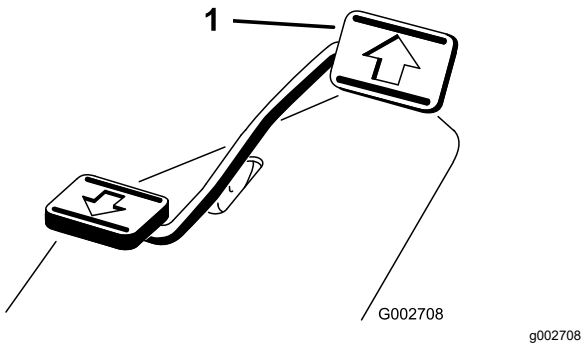

g002708

Figure 9

1. Traction and stopping pedal



g002709

Figure 10

The ground speed is proportionate to how far you press the traction pedal. For maximum ground speed, press the pedal fully while the throttle is in the FAST position. To get maximum power or when ascending a hill, have the throttle in the FAST position while pressing the pedal slightly to keep the engine speed high. When the engine speed begins to decrease, release the pedal slightly to allow the speed to increase.

Important: **For maximum pulling power, move the throttle to the FAST position and lightly press the traction pedal.**

Important: **Use the maximum ground speed only when driving between job sites.**

Do not use the maximum speed when using a mounted or towed attachment.

Important: **Do not operate the machine in reverse with the attachment in the down (operating) position, or the attachment could be severely damaged.**

Ignition Switch

The ignition switch (Figure 11), used to start and shut off the engine, has 3 positions: OFF, RUN, and START. Rotate the key clockwise to the START position to engage the starter motor. Release the key when the engine starts, and the key moves to the ON position. To shut the engine off, rotate the key counterclockwise to the OFF position.

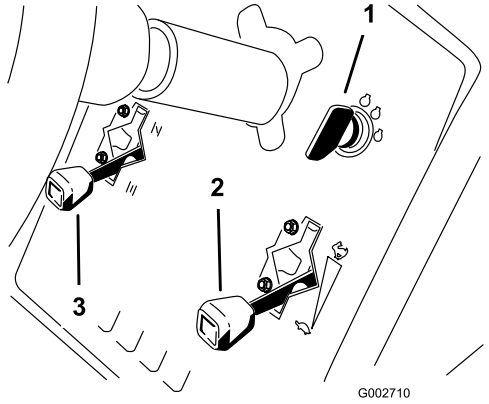

g002710

Figure 11

1. Ignition key
2. Throttle control
3. Choke control

Choke Control

To start a cold engine, close the carburetor choke by moving the choke control (Figure 11) up to the CLOSED position. After the engine starts, regulate the choke to keep the engine running smoothly. As soon as possible, open the choke by moving it down to the OPEN position. A warm engine requires little or no choking.

Throttle Control

The throttle control lever (Figure 11) connects to and operates the throttle linkage to the carburetor. The control has 2 positions: SLOW and FAST. The engine speed can be varied between the 2 settings.

Note: You cannot shut off the engine by using the throttle control.

Lift Lever

To raise the attachment, pull the lift lever (Figure 12) back; to lower the attachment, push the lever forward. For the FLOAT position, move the lever into the detent position. When you attain the desired position, release the lever and it will return to neutral.

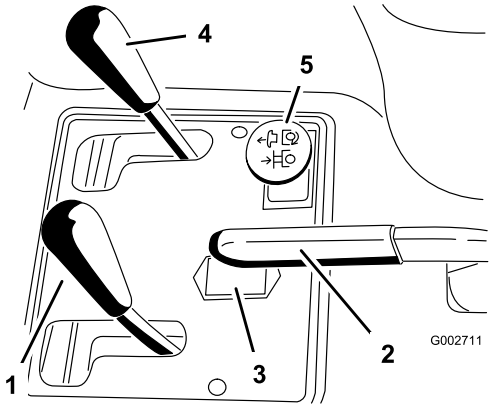

g002711

Figure 12

1. Lift lever
2. Parking brake
3. Hour meter
4. Front lift control (optional)
5. Rear remote hydraulics control (optional)

Note: The machine has a double-acting lift cylinder. You can apply down pressure to the attachment for certain operating conditions.

Parking Brake

To engage the parking brake (Figure 12), pull back on the parking-brake lever. To disengage it, push the lever forward.

Note: You may have to rotate the traction pedal slowly forward and backward to disengage the parking brake.

Hour Meter

The hour meter (Figure 12) indicates the total hours of machine operation. The hour meter starts to function whenever you rotate the key switch to the ON position.

Seat-Adjustment Lever

Move the lever on the left side of the seat (Figure 13) forward, slide the seat to the desired position, and release the lever to lock the seat into position.

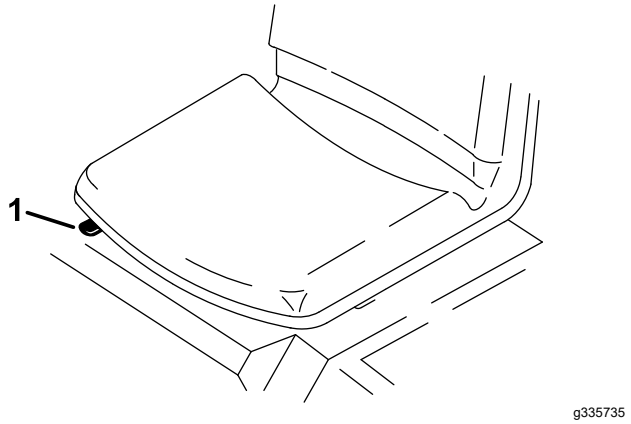

Figure 13

1. Seat-adjustment lever

Fuel-Shutoff Valve

Close the fuel-shutoff valve (Figure 14) when storing the machine or transporting it on a trailer.

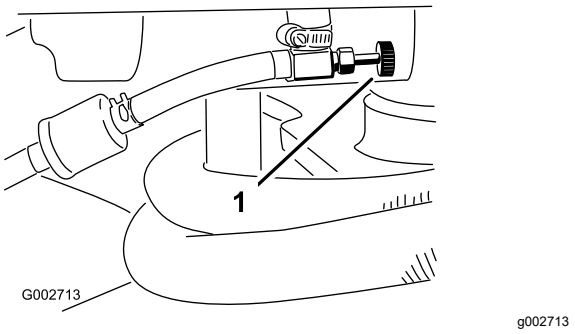

Figure 14

1. Fuel-shutoff valve

Specifications

Note: Specifications and design are subject to change without notice.

Width without attachment	148 cm (58 inches)
Width with rake, Model 08751	191 cm (75 inches)
Length without attachment	164 cm (64-1/2 inches)
Height	115 cm (45-1/4 inches)
Wheelbase	109 cm (42-3/4 inches)
Low Idle Engine Speed	1,650 to 1,850 rpm
High Idle Engine Speed	3,350 to 3,450 rpm
Net weight	
Model 08703	452 kg (996 lb)
Model 08705	461 kg (1,017 lb)

Attachments/Accessories

A selection of Toro approved attachments and accessories is available for use with the machine to enhance and expand its capabilities. Contact your Authorized Service Dealer or authorized Toro distributor or go to www.Toro.com for a list of all approved attachments and accessories.

To ensure optimum performance and continued safety certification of the machine, use only genuine Toro replacement parts and accessories. Replacement parts and accessories made by other manufacturers could be dangerous, and such use could void the product warranty.

Operation

Before Operation

Before Operation Safety

General Safety

- Park the machine on a level surface; engage the parking brake; shut off the engine; remove the key; and wait for all movement to stop before leaving the machine.
- Never allow children or untrained people to operate or service the machine. Local regulations may restrict the age of the operator. The owner is responsible for training all operators and mechanics.
- Become familiar with the safe operation of the equipment, operator controls, and safety signs.
- Know how to stop the machine and engine quickly.
- Check that operator-presence controls, safety switches, and shields are attached and functioning properly. Do not operate the machine unless they are functioning properly.
- Before operating, always inspect the machine to ensure that the components and fasteners are in good working condition. Replace worn or damaged components and fasteners.
- Inspect the area where you will use the machine and remove all objects that the machine could throw.

Fuel Safety

- Use extreme care in handling fuel. It is flammable and its vapors are explosive.
- Extinguish all cigarettes, cigars, pipes, and other sources of ignition.
- Use only an approved fuel container.
- Do not remove the fuel cap or fill the fuel tank while the engine is running or hot.
- Do not add or drain fuel in an enclosed space.
- Do not store the machine or fuel container where there is an open flame, spark, or pilot light, such as on a water heater or other appliance.
- If you spill fuel, do not attempt to start the engine; avoid creating any source of ignition until the fuel vapors have dissipated.

Filling the Fuel Tank

- **Fuel-tank capacity:** 25 L (5-1/2 US gallons).
- **Recommended fuel:**
  - For best results, use only clean, fresh (less than 30 days old), unleaded gasoline with an octane rating of 87 or higher ((R+M)/2 rating method).
  - Ethanol: Gasoline with up to 10% ethanol (gasohol) or 15% MTBE (methyl tertiary butyl ether) by volume is acceptable. Ethanol and MTBE are not the same. Gasoline with 15% ethanol (E15) by volume is not approved for use. Never use gasoline that contains more than 10% ethanol by volume, such as E15 (contains 15% ethanol), E20 (contains 20% ethanol), or E85 (contains up to 85% ethanol). Using unapproved gasoline may cause performance problems and/or engine damage which may not be covered under warranty.
  - Do not use gasoline containing methanol.
  - Do not store fuel either in the fuel tank or fuel containers over the winter unless a fuel stabilizer is used.
  - Do not add oil to gasoline.

Important: **Do not use fuel additives other than a fuel stabilizer/conditioner. Do not use fuel stabilizers with an alcohol base such as ethanol, methanol, or isopropanol.**

1. Clean the area around the fuel-tank cap (Figure 15).
2. Remove the fuel-tank cap.
3. Fill the tank to about 25 mm (1 inch) below the top of the tank (bottom of the filler neck). **Do not overfill**.

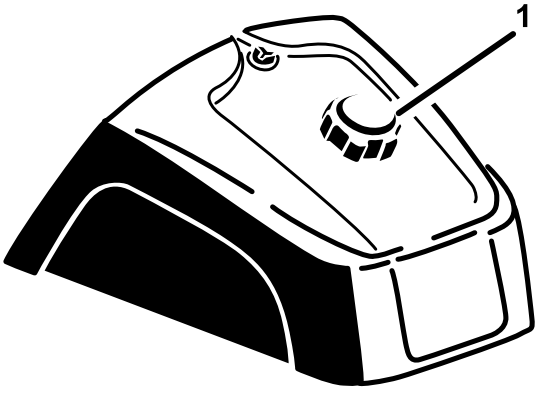

g027112

Figure 15

1. Fuel-tank cap

4. Install the cap.
5. Wipe up any fuel that may have spilled to prevent a fire hazard.

Important: **Never use methanol, gasoline containing methanol, or gasohol containing more than 10% ethanol because the fuel system could be damaged. Do not mix oil with gasoline.**

Before Operations Checks

Perform the following daily procedures before operating the machine:

- Checking the Interlock System (page 15)
- Checking the Engine-Oil Level (page 23)
- Checking the Tire Pressure (page 29)
- Checking the Hydraulic Lines and Hoses (page 31)
- Checking the Hydraulic-Fluid Level (page 32)
- Ensure that the temperature is greater than -6.7°C (20°F) before operating the machine or the main traction pump may be damaged.

Checking the Interlock System

⚠ CAUTION

If safety interlock switches are disconnected or damaged the machine could operate unexpectedly and cause personal injury.

- **Do not tamper with the interlock switches.**
- **Check the operation of the interlock switches daily and replace any damaged switches before operating the machine.**

The purpose of the interlock system is to prevent the engine from cranking or starting unless the traction pedal is in the NEUTRAL position. Also, the engine should shut off if the traction pedal is moved either forward or reverse without an operator in the seat.

Important: **If the traction unit has either the rear remote hydraulic kit Model 08781 or hydraulic switch kit Model 08783 installed, there are additional interlock conditions:**

The machine does not start when the remote hydraulic switch is turned ON.

If the machine is running with the hydraulic switch turned ON, the machine shuts off when the operator leaves the seat.

1. Position the machine in a wide-open area free of debris and bystanders. Shut off the engine.
2. Sit on the seat and engage the parking brake.
3. Press the traction pedal in forward and reverse while trying to start the engine.

   Note: If the engine cranks, there may be a malfunction in the interlock system. Repair it immediately.

   If the engine does not crank, the system is operating correctly.
4. Stay seated on the seat, with the traction pedal in the NEUTRAL position and the parking brake engaged, and start the engine.
5. Rise off the seat and slowly press the traction pedal.

   Note: The engine should shut off in 1 to 3 seconds. Correct the problem if the system does not operate properly.

During Operation

Note: Determine the left and right sides of the machine from the normal operating position.

General Safety

- The owner/operator can prevent and is responsible for accidents that may cause personal injury or property damage.
- Wear appropriate clothing, including eye protection; slip-resistant, substantial foot protection; long pants; and hearing protection. Tie back long hair and do not wear loose jewelry.
- Do not operate the machine while ill, tired, or under the influence of alcohol or drugs.
- Never carry passengers on the machine and keep bystanders and pets away from the machine during operation.
- Operate the machine only in good visibility to avoid holes or hidden hazards.
- Avoid operating on wet grass. Reduced traction could cause the machine to slide.
- Before you start the engine, ensure that all drives are in neutral, the parking brake is engaged, and you are in the operating position.
- Look behind and down before backing up to be sure of a clear path.
- Use care when approaching blind corners, shrubs, trees, or other objects that may obscure your vision.
- Do not operate near drop-offs, ditches, or embankments. The machine could suddenly roll over if a wheel goes over the edge or if the edge gives way.
- Stop the machine and inspect the attachment after striking an object or if there is an abnormal vibration in the machine. Make all necessary repairs before resuming operation.
- Slow down and use caution when making turns and crossing roads and sidewalks with the machine. Always yield the right-of-way.
- Never run an engine in an area where exhaust gasses are enclosed.
- Never leave a running machine unattended.
- Before leaving the operating position, do the following:
  - Park the machine a level surface.
  - Lower the attachments.
  - Engage the parking brake.
  - Shut off the engine and remove the key.
  - Wait for all moving parts to stop.
- Do not operate the machine when there is the risk of lightning.
- Do not use the machine as a towing vehicle.
- When necessary, wet surfaces prior to conditioning to minimize dust creation.
- Use accessories, attachments, and replacement parts approved by Toro only.

Slope Safety

- Establish your own procedures and rules for operating on slopes. These procedures must include surveying the site to determine which slopes are safe for machine operation. Always use common sense and good judgment when performing this survey.
- Slopes are a major factor related to loss of control and rollover accidents, which can result in severe injury or death. The operator is responsible for safe slope operation. Operating the machine on any slope requires extra caution.
- Operate the machine at a lower speed when you are on a slope.
- If you feel uneasy operating the machine on a slope, do not do it.
- Watch for holes, ruts, bumps, rocks, or other hidden objects. Uneven terrain could overturn the machine. Tall grass can hide obstacles.
- Choose a low ground speed so you will not have to stop or shift while on a slope.
- A rollover can occur before the tires lose traction.
- Avoid operating the machine on wet grass. Tires may lose traction; regardless if the brakes are available and functioning.
- Avoid starting, stopping, or turning the machine on a slope.
- Keep all movement on slopes slow and gradual. Do not suddenly change the speed or direction of the machine.
- Do not operate the machine near drop-offs, ditches, embankments, or bodies of water. The machine could suddenly roll over if a wheel goes over the edge or the edge caves in. Establish a safety area between the machine and any hazard (2 machine widths).

Starting and Shutting Off the Engine

1. Remove your foot from the traction pedal, ensure that the pedal is in the NEUTRAL position, and engage the parking brake.
2. Push the choke lever forward to the ON position (when starting a cold engine) and the throttle lever to the SLOW position.

   Important: **When operating the machine in temperatures less than 0°C (32°F) allow the machine time to warm up before using it. This prevents damage to the hydrostat and the traction loop.**

   Do not operate the machine in temperatures less than -6.7°C (20°F) or the main traction pump may be damaged.
3. Insert the key into the ignition switch and rotate it clockwise to start the engine. Release the key when the engine starts.

   Note: Regulate the choke to keep the engine running smoothly.

   Important: **To prevent overheating the starter motor, do not engage the starter longer than 10 seconds. After 10 seconds of continuous cranking, wait 60 seconds before engaging the starter motor again.**
4. To shut off the engine, move the throttle control to the SLOW position and rotate the ignition key to OFF.

   Note: Remove the key from the switch to prevent accidental starting.
5. Close the fuel-shutoff valve before storing the machine.

⚠ CAUTION

Inspecting the machine while the engine is running could result in injury.

Shut the engine off and wait for all moving parts to stop before checking for oil leaks, loose parts, and other malfunctions.

Breaking in the Machine

New engines take time to develop full power. Drive systems have more friction when they are new, placing additional load on the engine.

Allow the first 8 hours of operating time for the break-in period.

Since the first hours of operation are critical to future dependability of the machine, monitor the functions and performance closely so that you can notice and correct minor difficulties, which could lead to major problems. Inspect the machine frequently during the break-in period, for signs of oil leakage, loose fasteners, or any other malfunction.

Becoming Familiar with the Machine

Refer to the attachment *Operator's Manual* for specific operating instructions for the attachment.

Practice driving the machine, because its operating characteristics are different than some utility vehicles. 2 points to consider when operating the vehicle are transmission speed and engine speed.

To maintain constant engine speed, press the traction pedal slowly. This allows the engine to keep up with the ground speed of the vehicle. By contrast, pushing down quickly on the traction pedal reduces the engine speed; as a result, there will not be enough torque-power to move the vehicle. Therefore, to transfer maximum power to the wheels, move the throttle to FAST and slightly press the traction pedal. By comparison, maximum ground speed with no load results when the throttle is in the FAST position and the traction pedal is slowly but fully pressed. Always keep the engine speed high enough to deliver maximum torque-power to the wheels.

⚠ CAUTION

Operating the machine demands attention to prevent tipping or loss of control.

- **Use care when entering and leaving sand traps.**
- **Use extreme caution around ditches, creeks, or other hazards.**
- **Use caution when operating the machine on a steep slope.**
- **Reduce your speed when making sharp turns or when turning on hillsides.**
- **Avoid sudden stops and starts.**
- **Do not go from reverse to full forward without first coming to a complete stop.**

Note: If the attachment adapter becomes stuck to the traction unit adapter, insert a pry bar or a screwdriver into the pry slot to disengage the parts (Figure 16).

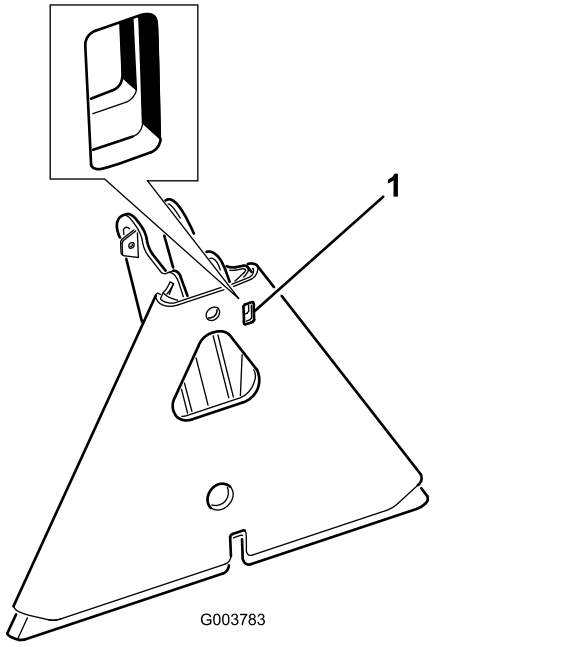

Figure 16

1. Pry slot

After Operation

After Operation Safety

- Park the machine on a level surface; engage the parking brake; shut off the engine; remove the key; and wait for all movement to stop before leaving the machine.
- Clean grass and debris from the muffler and engine compartment to help prevent fires. Clean up oil or fuel spills.
- Allow the engine to cool before storing the machine in any enclosure.
- Shut off the fuel before storing or transporting the machine.
- Never store the machine or fuel container where there is an open flame, spark, or pilot light, such as on a water heater or on other appliances.
- Keep all parts of the machine in good working condition and all hardware tightened.
- Replace all worn, damaged, or missing decals.

Towing the Machine

In case of emergency, you can tow the machine for a short distance. However, we do not recommend this as a standard procedure.

Important: **Do not tow the machine faster than 1.6 km/h (1 mph), because drive system damage may occur. If you must move the machine more than 50 m (55 yd), transport it on a truck or a trailer. The tires may lock up if you tow the machine too fast. If this occurs, stop towing the machine and wait for the traction circuit pressure to stabilize before resuming towing at a slower speed.**

Hauling the Machine

- Use full-width ramps for loading the machine onto a trailer or truck.
- Tie the machine down securely.

Maintenance

Note: To obtain an electrical schematic or a hydraulic schematic for your machine, visit www.Toro.com.

Maintenance Safety

- Before adjusting, cleaning, repairing, or leaving the machine, do the following:
  - Park the machine on a level surface.
  - Move the throttle switch to the low-idle position.
  - Lower the attachment.
  - Ensure that the traction is in neutral.
  - Engage the parking brake.
  - Shut off the engine and remove the key.
  - Wait for all moving parts to stop.
  - Allow machine components to cool before performing maintenance.
- If possible, do not perform maintenance while the engine is running. Keep away from moving parts.
- Use jack stands to support the machine or components when required.
- Carefully release pressure from components with stored energy.

Recommended Maintenance Schedule(s)

Maintenance Service Interval	Maintenance Procedure
After the first 8 hours	• Torque the wheel lug nuts.
Before each use or daily	• Check the safety interlock system. • Check the engine-oil level. • Check the tire pressure. • Check the condition of the hydraulic lines and hoses. • Check the hydraulic-fluid level.
After each use	• Clean and inspect the machine.
Every 25 hours	• Check the cable connections and the level of the battery fluid.
Every 100 hours	• Grease the machine. • Change the engine oil and filter (more often in extremely dirty or dusty conditions). • Replace the spark plugs. • Torque the wheel lug nuts.
Every 200 hours	• Service the air cleaner (earlier in extremely dusty, dirty conditions). • Replace the air filter.
Every 500 hours	• Replace the fuel filter. • Change the carbon-canister filter. • Clean the oil cooler. • Check the engine speed (at idle and full throttle). Contact your authorized Toro distributor for service.
Every 800 hours	• If you are not using the recommended hydraulic fluid or have ever filled the reservoir with an alternative fluid, replace the hydraulic filter. • If you are not using the recommended hydraulic fluid or have ever filled the reservoir with an alternative fluid, change the hydraulic fluid. • De-carbon the combustion chamber. Contact your authorized Toro distributor for service. • Adjust the valves and torque head bolts. Contact your authorized Toro distributor for service. • Drain and clean the fuel tank.
Every 1,000 hours	• If you are using the recommended hydraulic fluid, replace the hydraulic filter.
Every 1,500 hours	• Replace moving hoses. • Replace the neutral and seat interlock switches.
Every 2,000 hours	• If you are using the recommended hydraulic fluid, change the hydraulic fluid.

Important: **Refer to your engine owner's manual for additional maintenance procedures.**

Daily Maintenance Checklist

Duplicate this page for routine use.

Maintenance Check Item	For the week of:						
	Mon.	Tues.	Wed.	Thurs.	Fri.	Sat.	Sun.
Check the safety interlock operation.							
Check the steering operation.							
Check the fuel level.							
Check the level of the engine oil.							
Check the condition of the air filter.							
Clean the cooling fins on the engine.							
Check unusual engine noises.							
Check unusual operating noises.							
Check the level of the hydraulic fluid.							
Check the hydraulic hoses for damage.							
Check for fluid leaks.							
Check the tire pressure.							
Check the instrument operation.							
Touch-up damaged paint.							

Notation for Areas of Concern		
Inspection performed by:		
Item	Date	Information

Pre-Maintenance Procedures

Note: Determine the left and right sides of the machine from the normal operating position.

⚠ CAUTION

If you leave the key in the ignition switch, someone could accidently start the engine and seriously injure you or other bystanders.

Remove the key from the ignition before you do any maintenance.

Important: **The fasteners on the covers of this machine are designed to remain on the cover after removal. Loosen all the fasteners on each cover a few turns so that the cover is loose but still attached, then go back and loosen them until the cover comes free. This prevents you from accidentally stripping the bolts free of the retainers.**

Lifting the Machine

⚠ WARNING

Mechanical or hydraulic jacks may fail to support the machine and cause serious injury.

Use jack stands when supporting the machine.

The jacking points are as follows:

- Left or right side—under the rear wheel motor or the frame (Figure 17).

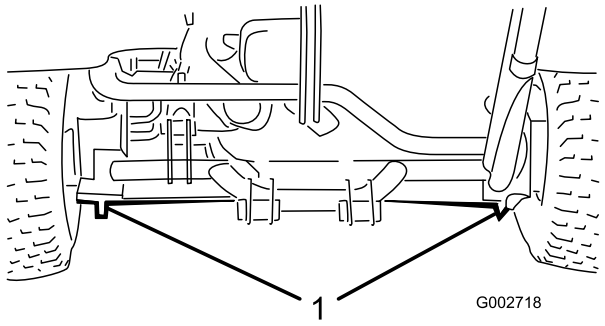

g002718

Figure 17

1. Rear jacking points

- Front—under the frame behind the front wheel (Figure 18).

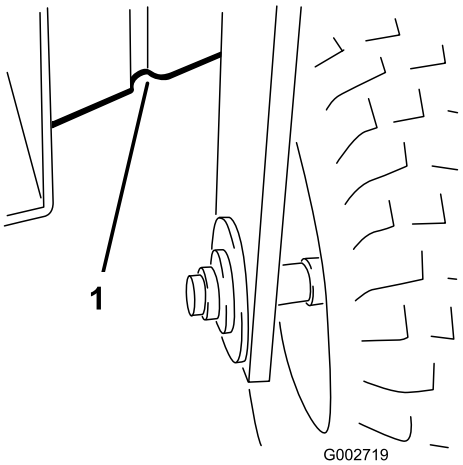

g002719

Figure 18

1. Front jacking points

Lubrication

Greasing the Machine

Service Interval: Every 100 hours

Lubricate the grease fittings with No. 2 lithium grease.

1. Wipe the grease fitting clean so that foreign matter cannot be forced into the bearing or bushing.
2. Pump grease into the bearing or bushing.
3. Wipe up excess grease.
4. Lubricate the following bearings and bushings:
   - 1 Front wheel bearing (Figure 19).

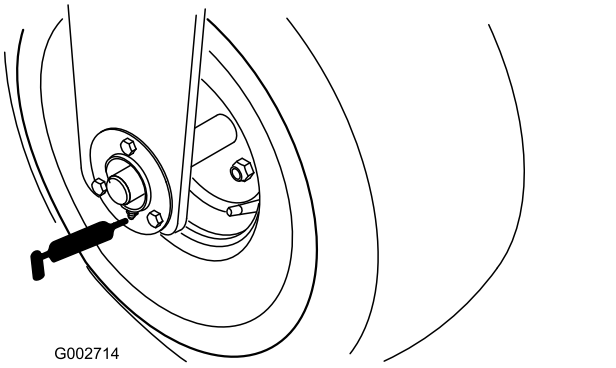

Figure 19

   - 1 Traction-pedal pivot bearing (Figure 20).

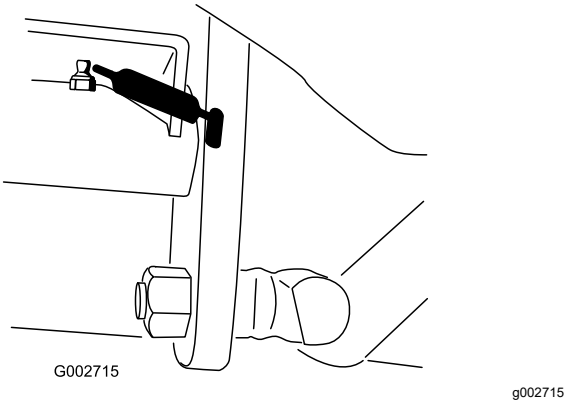

Figure 20

   - 5 Rear hitch bearings (Figure 21).

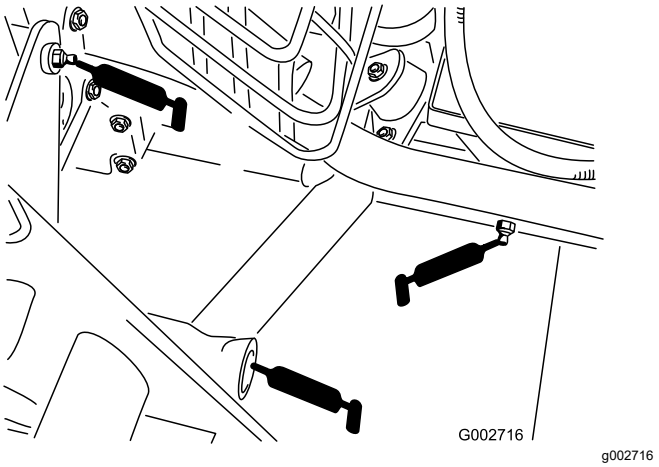

Figure 21
Left side and center grease fittings shown

   - 1 Steering pivot bearing (Figure 22).

     Note: The flush fitting on the steering pivot requires a grease gun nozzle adapter. Order Toro Part No. 107-1998 from your authorized Toro distributor.

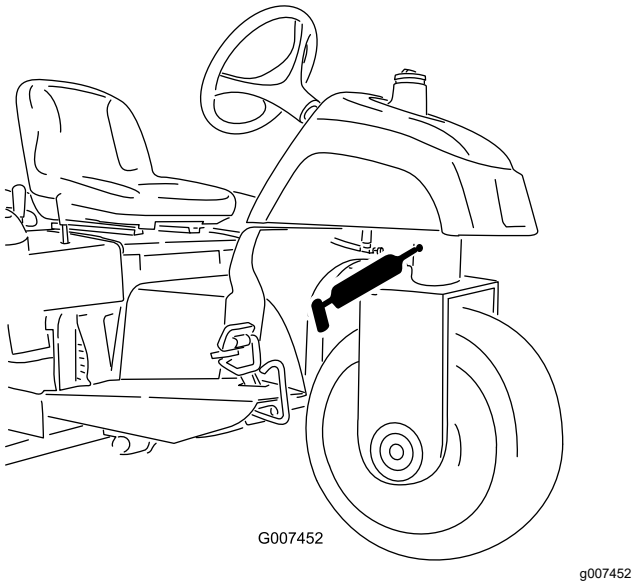

Figure 22

   - 1 Steering cylinder rod end bearing—Model 08705 only (Figure 23).

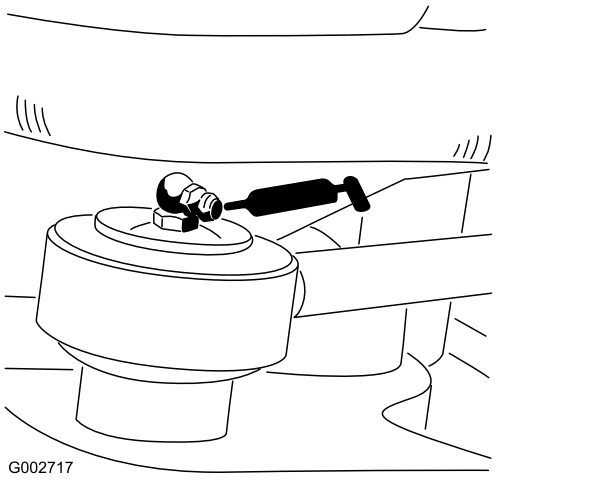

Figure 23

Engine Maintenance

Engine Safety

- Shut off the engine before checking the oil or adding oil to the crankcase.
- Do not change the governor speed or overspeed the engine.

Engine Oil Specification

Use high-quality engine oil that meets the following specifications:

API classification level: SJ or higher

Oil Viscosity: SAE 30—above 4°C (40°F)

Checking the Engine-Oil Level

Service Interval: Before each use or daily

The engine is shipped with oil in the crankcase; however, you must check the oil level before and after you first start the engine.

Note: Check the oil when the engine is cold.

Important: **If you overfill or underfill the engine crankcase with oil and run the engine, you may damage the engine.**

1. Park the machine on a level surface, engage the parking brake, shut off the engine, remove the key, and wait for all moving parts to stop before leaving the operating position.
2. Pivot the seat forward.
3. To keep dirt, grass clippings, etc., out of the engine, clean the area around the oil-fill cap and dipstick before removing it (Figure 24).
4. Pull out the dipstick (Figure 24) and wipe it with a clean rag.

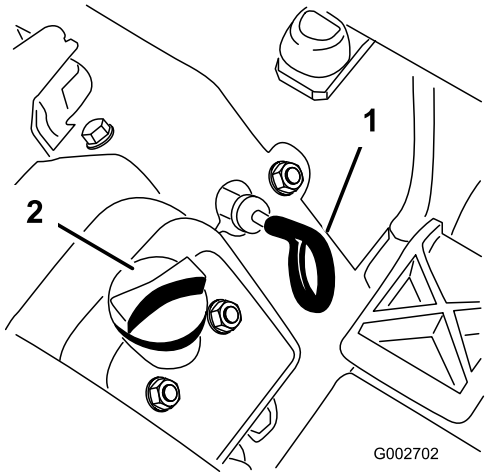

g002702

Figure 24

1. Dipstick
2. Oil-fill cap

5. Insert the dipstick into the tube and make sure that it is fully seated. Remove the dipstick from the tube and check the oil level. If the oil level is low, remove the filler cap from the valve cover and add enough of the specified oil to raise the level to the Full mark on the dipstick (Figure 25).

   Important: **Be sure to keep the oil level between the upper and lower mark on the dipstick. If you overfill or underfill the engine oil, you may damage engine when running it.**

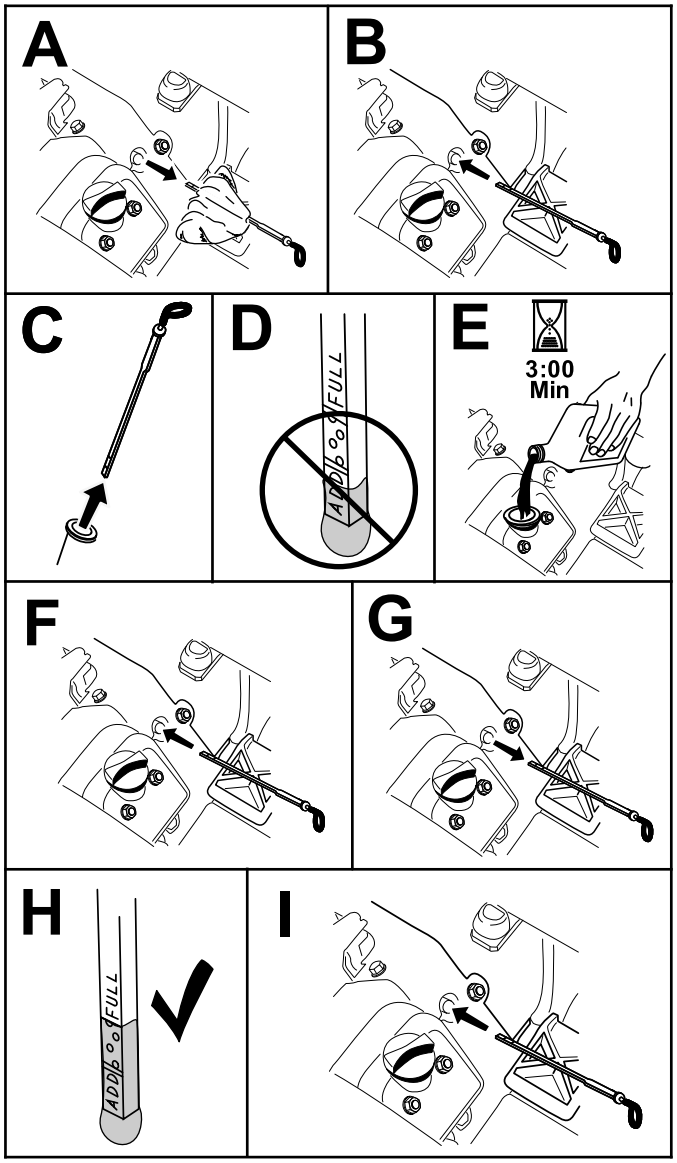

g351424

Figure 25

6. Install the dipstick firmly in place.

   Important: **You must fully seat the dipstick in the tube to proper seal the engine crankcase. Failure to seal the crankcase may result in engine damage.**

7. Pivot the seat down.

Changing the Engine Oil and Filter

Service Interval: Every 100 hours (more often in extremely dirty or dusty conditions).

Crankcase oil capacity: approximately 1.66 L (1-3/4 US qt) with the filter.

1. Park the machine on a level surface, shut off the engine, engage the parking brake, and remove the key.
2. Remove the drain plug (Figure 26) and let the oil flow into a drain pan. When the oil stops, install the drain plug.

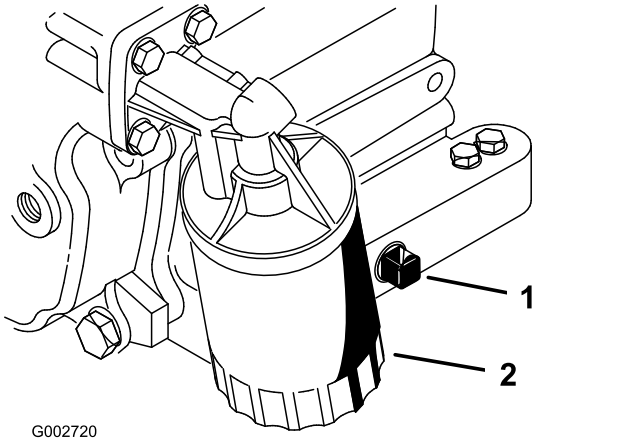

Figure 26

1. Drain plug
2. Oil filter

3. Remove the oil filter (Figure 26).
4. Apply a light coat of clean oil to the new filter gasket.
5. Thread the filter on by hand until the gasket contacts the filter adapter; then tighten 1/2 to 3/4 turn further.

   Important: **Do not overtighten the filter.**
6. Add the specified oil to the crankcase; refer to Engine Oil Specification (page 23).
7. Dispose of the used oil properly.

Servicing the Air Cleaner

Service Interval: Every 200 hours

- Check the body of the air cleaner for damage that could cause an air leak. Replace any damaged components. Check the whole intake system for leaks, damage, or loose hose clamps.
- Do not change the air filter before it is necessary; doing so only increases the chance of dirt entering the engine when you remove the filter.
- Be sure that the cover is seated correctly and seals with the body of the air cleaner.

Replacing the Air Filter

Service Interval: Every 200 hours

1. Release the latches securing the air-cleaner cover to the air-cleaner body (Figure 27).

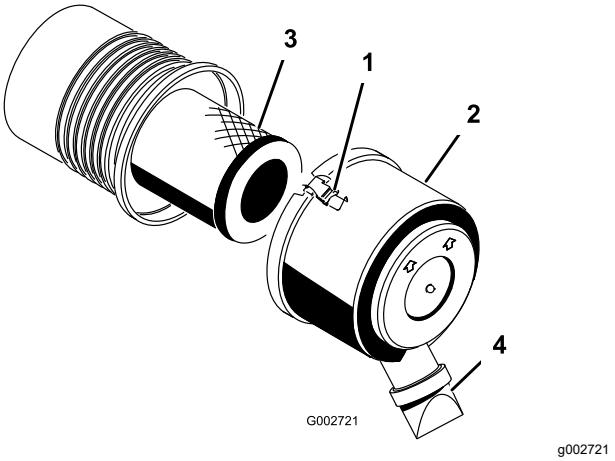

Figure 27

1. Latch
2. Dust cap
3. Air filter
4. Dirt-ejection port

2. Remove the cover from the air-cleaner body.
3. Before removing the filter, use low-pressure air (40 psi, clean and dry) to help remove large accumulations of debris packed between the outside of the primary filter and the canister.

   Important: **Avoid using high-pressure air, which could force dirt through the filter into the intake tract. This cleaning process prevents debris from migrating into the intake when the primary filter is removed.**
4. Remove and replace the filter.

   Note: Inspect the new filter for shipping damage, checking the sealing end of the filter and the body. Do not use a damaged element. Insert the new filter by applying pressure to the outer rim of the element to seat it in the canister. Do not apply pressure to the flexible center of the filter.

   Note: Cleaning the used element is not recommended due to the possibility of damaging the filter media.
5. Clean the dirt-ejection port located in the removable cover.
6. Remove the rubber outlet valve from the cover, clean the cavity, and replace the outlet valve.
7. Install the cover, orienting the rubber outlet valve in a downward position—between approximately 5 o'clock to 7 o'clock when viewed from the end.
8. Secure the latches.

Replacing the Spark Plugs

Service Interval: Every 100 hours

Type: Champion RC14YC (or equivalent)

Air Gap: 0.76 mm (0.030 inch)

Note: The spark plugs usually last a long time; however, you should remove and check them whenever the engine malfunctions.

1. Clean the area around each spark plug so that foreign matter cannot fall into the cylinder when the spark plug is removed.
2. Pull the spark-plug wires off the spark plugs and remove the plugs from the cylinder head.
3. Check the condition of the side electrode, center electrode, and the insulator to ensure that there is no damage.

   Important: **Replace a cracked, fouled, dirty, or otherwise malfunctioning spark plug. Do not sand-blast, scrape, or clean the electrodes using a wire brush because grit may eventually release from the plug, fall into the cylinder, and damaged the engine.**
4. Set the air gap between the center electrode and side electrodes to 0.76 mm (0.030 inch); refer to Figure 28. Install the correctly gapped spark plug with the gasket seal, and tighten the plug to 23 N·m (200 in-lb). If a torque wrench is not used, tighten the plug firmly.

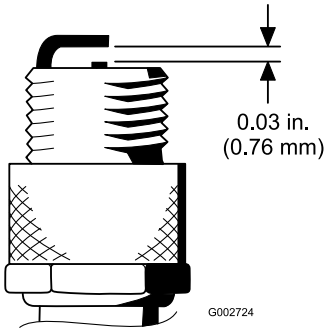

g002724

Figure 28

Fuel System Maintenance

Replacing the Fuel Filter

Service Interval: Every 500 hours

An in-line filter is incorporated into the fuel line. Use the following procedures when replacement becomes necessary:

1. Close the fuel-shutoff valve, loosen the hose clamp on the carburetor side of the filter, and remove the fuel line from the filter (Figure 29).

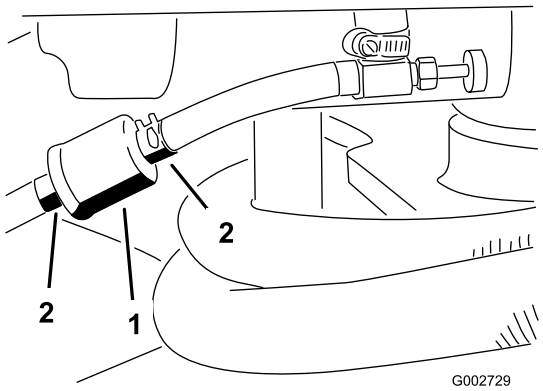

g002729

Figure 29

1. Fuel filter
2. Hose clamps

2. Place a drain pan under the filter, loosen the remaining hose clamp, and remove the filter.
3. Install the new filter with the arrow on the filter body pointing away from the fuel tank (toward the carburetor).
4. Slide the hose clamps onto the ends of the fuel lines.
5. Push the fuel lines onto the fuel filter and secure them with the hose clamps.

   Note: Be sure that the arrow on the side of the filter points toward the carburetor.

Changing the Carbon-Canister Filter

Service Interval: Every 500 hours

1. Raise the right rear tire off the ground, and support the machine with jack stands.
2. Remove the 4 wheel nuts that secure the wheel to the hub, and remove the wheel and tire (Figure 30).

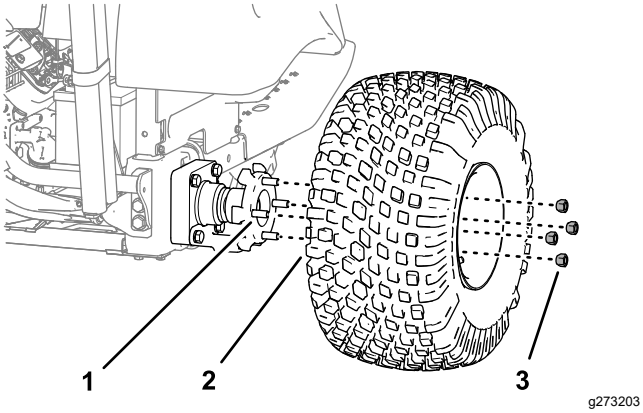

g273203

Figure 30

1. Stud (wheel hub)
2. Tire and Wheel
3. Wheel nuts

3. Remove the 4 flange capscrews (1/4 x 5/8 inch) that secure the wheel shroud to the frame of the machine (Figure 31).

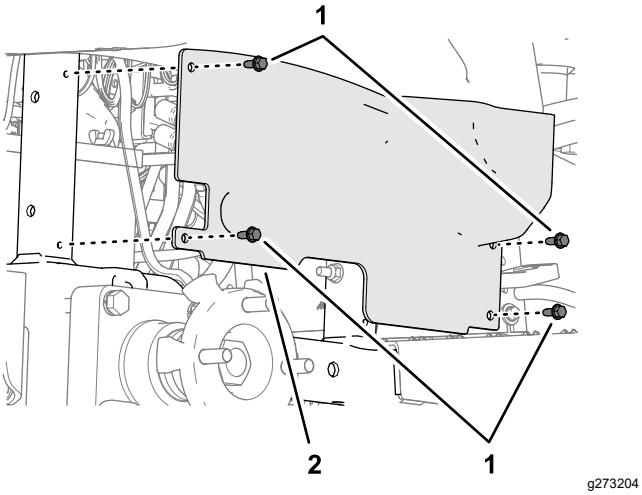

g273204

Figure 31

1. Flange capscrews (1/4 x 5/8 inch)
2. Wheel shroud

4. Reaching around the lower, inboard edge of the console, pull the carbon-canister filter rearward and out of the hose at the end of the carbon canister (Figure 32).

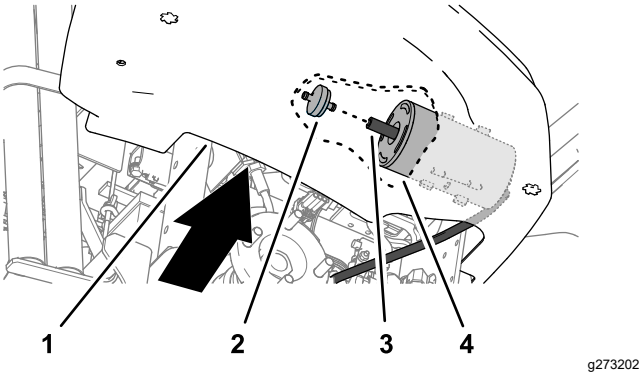

g273202

Figure 32

1. Console
2. Carbon-canister filter
3. Hose
4. Carbon canister

5. Insert a new carbon-canister filter into the hose at the end of the carbon canister (Figure 32).
6. Align the holes in the wheel shroud with the frame of the machine (Figure 31), and secure the shroud to the frame with 4 flange capscrews (1/4 x 5/8 inch) that you removed in step 3.
7. Assemble the tire and wheel into the studs of the wheel hub (Figure 30) with the 4 wheel nuts that you removed in step 2, and tighten the nuts by hand.
8. Remove the jack stand and lower the machine to the ground.
9. Torque the wheel nuts; refer to Torquing the Wheel Lug Nuts (page 29).

Electrical System Maintenance

Electrical System Safety

- Disconnect the battery before repairing the machine. Disconnect the negative terminal first and the positive last. Connect the positive terminal first and the negative last.
- Charge the battery in an open, well-ventilated area, away from sparks and flames. Unplug the charger before connecting or disconnecting the battery. Wear protective clothing and use insulated tools.

Jump-Starting the Machine

If you need to jump-start the machine, you can use the alternative positive post (located on the starter solenoid) instead of the positive battery post (Figure 33).

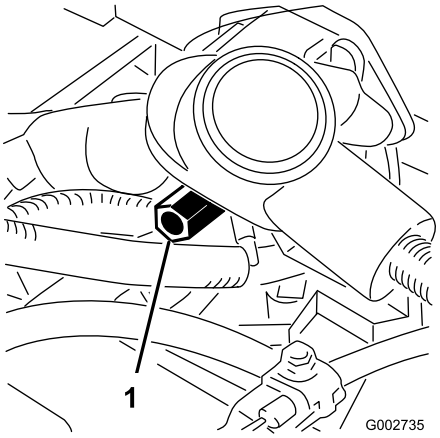

g002735

Figure 33

1. Alternative positive battery post

Replacing Fuses

The fuse block (Figure 34) is located under the seat.

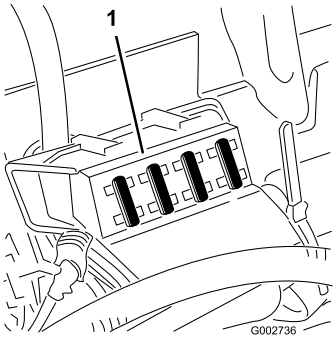

g002736

Figure 34

1. Fuse block

Maintaining the Battery

Service Interval: Every 25 hours

Maintain the proper battery electrolyte level and keep the top of the battery clean. If the machine is stored in a location where temperatures are extremely high, the battery runs down more rapidly than if the machine is stored in a location where temperatures are cool.

Keep the top of the battery clean by washing it periodically with a brush dipped in ammonia or baking-soda solution. Flush the top surface with water after cleaning. Do not remove the fill cap while cleaning.

The battery cables must be tight on the terminals to provide good electrical contact.

If corrosion occurs at the battery terminals, disconnect the cables, negative (-) cable first, and scrape the clamps and terminals separately. Connect the cables, positive (+) cable first, and coat the terminals with petroleum jelly.

- Check the electrolyte level every 25 operating hours, or if the machine is in storage, every 30 days.
- Maintain the cell level with distilled or demineralized water. Do not fill the cells above the fill line.

Drive System Maintenance

Checking the Tire Pressure

Service Interval: Before each use or daily

Check the tire pressure before operating the machine (Figure 35). The correct air pressure in the front and rear tires is as follows:

- Treaded tires: 70 kPa (10 psi)

  Note: If additional traction is required for blade operation, reduce the pressure to 55 kPa (8 psi).

- Smooth tires: 55 to 70 kPa (8 to 10 psi)

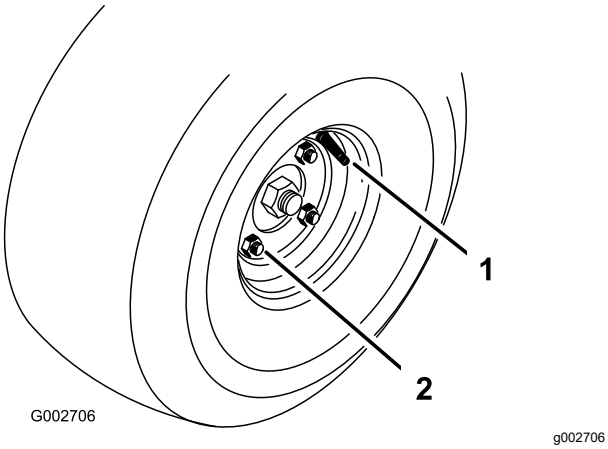

Figure 35

1. Valve stem
2. Lug nut

Torquing the Wheel Lug Nuts

Service Interval: After the first 8 hours

Every 100 hours

Torque the lugs nuts to 95 to 122 N·m (70 to 90 ft-lb).

Adjusting the Transport Speed

Obtaining Maximum Transport Speed

The traction pedal is adjusted for maximum transport speed and reverse at the factory, but an adjustment may be required if the pedal reaches full stroke before the pump lever reaches full stroke, or if a decrease in transport speed is desired.

To obtain maximum transport speed, press down on the traction pedal. If the pedal contacts the stop (Figure 36) before the pump lever reaches full stroke, adjust it:

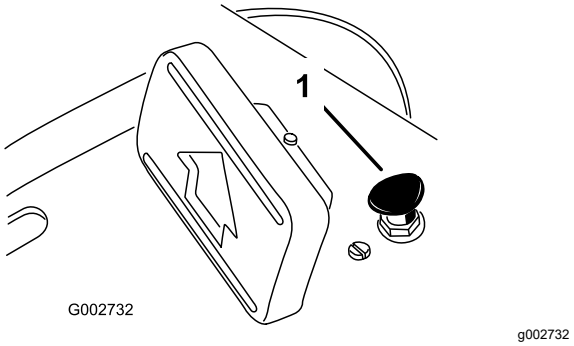

Figure 36

1. Pedal stop

1. Park the machine on a level surface, shut off the engine, engage the parking brake, and remove the key.
2. Loosen the nut securing the pedal stop.
3. Tighten the pedal stop until it does not contact the traction pedal.
4. Continue applying a light load on the transport pedal and adjust the pedal stop so that it just contacts or a gap of 2.5 mm (0.100 inch) is attained between the pedal rod and the stop.
5. Tighten the nuts.

Reducing the Transport Speed

1. Park the machine on a level surface, shut off the engine, engage the parking brake, and remove the key.
2. Loosen the nut securing the pedal stop.
3. Thread the pedal stop out until the desired transport speed is attained.
4. Tighten the nut securing the pedal stop.

Adjusting the Lift Lever

Adjust the detent plate of the lift lever (Figure 38) if the attachment does not float properly (follow ground contour) during operation.

1. Park the machine on a level surface, shut off the engine, engage the parking brake, and block the wheels.
2. Remove the 4 screws securing the control panel to the frame (Figure 37).

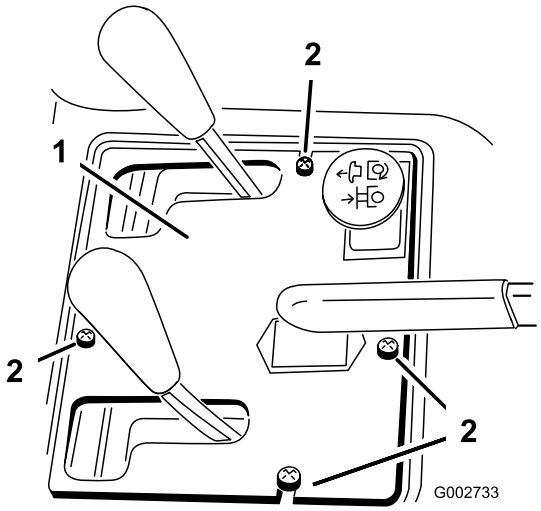

g002733

Figure 37

1. Control panel
2. Screws

3. Loosen the 2 bolts securing the detent plate to the fender and the frame.

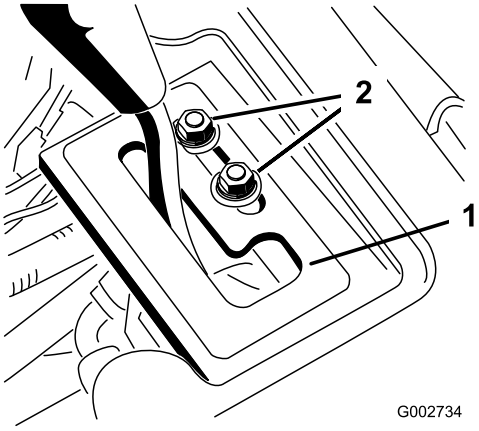

g002734

Figure 38

1. Detent plate
2. Mounting bolts

⚠ WARNING

The engine must be running so that you can adjust the detent plate. Contact with moving parts or hot surfaces may cause personal injury.

Keep your hands, feet, face, and other body parts away from rotating parts, the muffler, and other hot surfaces.

4. Start the engine.
5. With the engine running and the lift lever in the FLOAT position, slide the detent plate until the lift cylinder can be extended and retracted by hand.
6. Tighten both mounting screws to secure the adjustment.

Hydraulic System Maintenance

Hydraulic System Safety

- Seek immediate medical attention if fluid is injected into skin. Injected fluid must be surgically removed within a few hours by a doctor.
- Ensure that all hydraulic-fluid hoses and lines are in good condition and all hydraulic connections and fittings are tight before applying pressure to the hydraulic system.
- Keep your body and hands away from pinhole leaks or nozzles that eject high-pressure hydraulic fluid.
- Use cardboard or paper to find hydraulic leaks.
- Safely relieve all pressure in the hydraulic system before performing any work on the hydraulic system.

Checking the Hydraulic Lines and Hoses

Service Interval: Before each use or daily

Check the hydraulic lines and hoses daily for leaks, kinked lines, loose mounting supports, wear, loose fittings, weather deterioration, and chemical deterioration. Make all necessary repairs before operating.

Hydraulic Fluid Specifications

The reservoir is filled at the factory with high-quality hydraulic fluid. Check the level of the hydraulic fluid before you first start the engine and daily thereafter; refer to Checking the Hydraulic-Fluid Level (page 32).

Recommended hydraulic fluid: Toro PX Extended Life Hydraulic Fluid; available in 19 L (5 US gallon) pails or 208 L (55 US gallon) drums.

Note: A machine using the recommended replacement fluid requires less frequent fluid and filter changes.

Alternative hydraulic fluids: If Toro PX Extended Life Hydraulic Fluid is not available, you may use another conventional, petroleum-based hydraulic fluid having specifications that fall within the listed range for all the following material properties and that it meets industry standards. Do not use synthetic fluid. Consult with your lubricant distributor to identify a satisfactory product.

Note: Toro does not assume responsibility for damage caused by improper substitutions, so use products only from reputable manufacturers who will stand behind their recommendation.

High Viscosity Index/Low Pour Point Anti-wear Hydraulic Fluid, ISO VG 46

Material Properties:

Viscosity, ASTM D445	cSt @ 40°C (104°F) 44 to 48
Viscosity Index ASTM D2270	140 or higher
Pour Point, ASTM D97	-37°C to -45°C (-34°F to -49°F)
Industry Specifications:	Eaton Vickers 694 (I-286-S, M-2950-S/35VQ25 or M-2952-S)

Note: Many hydraulic fluids are almost colorless, making it difficult to spot leaks. A red dye additive for the hydraulic fluid is available in 20 ml (0.67 fl oz) bottles. A bottle is sufficient for 15 to 22 L (4 to 6 US gallons) of hydraulic fluid. Order Part No. 44-2500 from your authorized Toro distributor.

Important: **Toro Premium Synthetic Biodegradable Hydraulic Fluid is the only synthetic biodegradable fluid approved by Toro. This fluid is compatible with the elastomers used in Toro hydraulic systems and is suitable for a wide-range of temperature conditions. This fluid is compatible with conventional mineral oils, but for maximum biodegradability and performance, the hydraulic system should be thoroughly flushed of conventional fluid. The oil is available in 19 L (5 US gallon) pails or 208 L (55 US gallon) drums from your authorized Toro distributor.**

Checking the Hydraulic-Fluid Level

Service Interval: Before each use or daily Check the hydraulic-fluid level before you first start the engine and daily thereafter.

The reservoir is filled at the factory with the recommended hydraulic fluid. The best time to check the hydraulic fluid is when it is cold.

1. Fully raise all hydraulic attachment to the transport position.
2. Park the machine on a level surface, shut off the engine, engage the parking brake, and remove the key.
3. Clean the area around the hydraulic-reservoir cap to prevent debris from entering the tank (Figure 39).

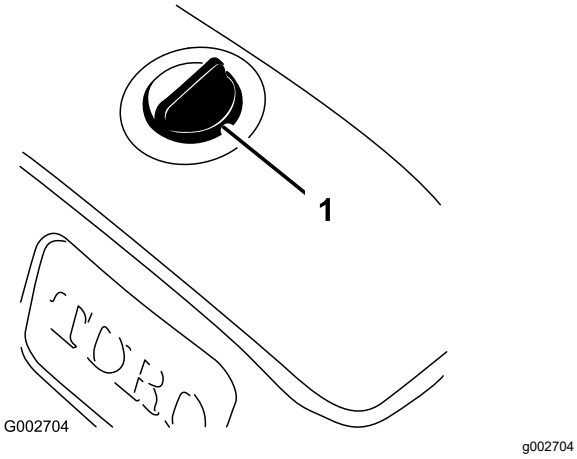

Figure 39

1. Hydraulic-reservoir cap

4. Remove the cap from the reservoir.
5. Remove the dipstick from the filler neck and wipe it with a clean rag.
6. Insert the dipstick into the filler neck; then remove it and check the level of the fluid (Figure 40).

   When the reservoir is properly filled with hydraulic fluid, you should see the fluid level between the upper and lower marks (necked-down area) on the dipstick.

   Important: **If the fluid level is between the upper and lower marks, no fluid addition is required.**

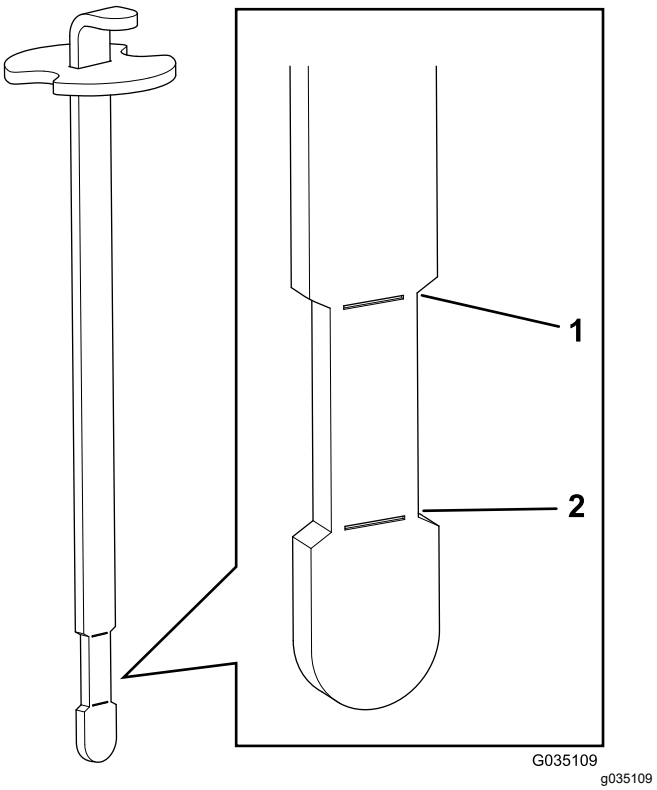

Figure 40

1. Upper limit
2. Lower limit

7. If the fluid level is too low, slowly add the specified hydraulic fluid to the reservoir until the fluid level reaches the necked-down area on the dipstick.

   Important: **To prevent system contamination, clean the surface of the of hydraulic-fluid containers before opening them. Ensure that the pour spout and the funnel are clean.**

   Important: **Do not overfill the reservoir with hydraulic fluid.**

8. Install the reservoir cap.

Replacing the Hydraulic Filter

Service Interval: Every 1,000 hours—**If you are using the recommended hydraulic fluid,** replace the hydraulic filter.

Every 800 hours—**If you are not using the recommended hydraulic fluid or have ever filled the reservoir with an alternative fluid,** replace the hydraulic filter.

1. Park the machine on a level surface, shut off the engine, engage the parking brake, and remove the key.
2. Loosen the 2 screws securing the center shroud to the machine and remove the shroud (Figure 41).

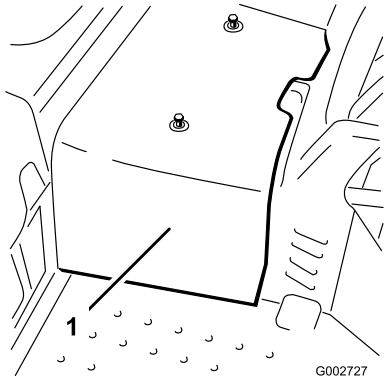

g002727

Figure 41

1. Center shroud

3. Lubricate the sealing gasket on the replacement filter with clean hydraulic fluid.
4. Place a drain pan under the hydraulic filter, which is located at the left side of the machine (Figure 42).

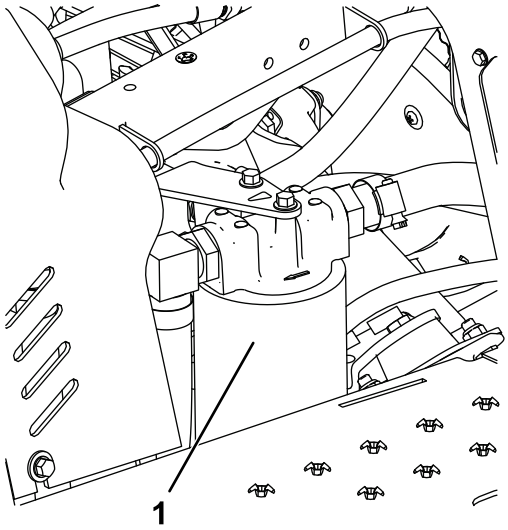

g339957

Figure 42

1. Hydraulic filter

5. Clean the area around the filter mounting area.

   Note: Have the replacement filter within reach before removing the old filter.
6. Remove the hydraulic filter from the filter head.
7. Install the new hydraulic filter (Figure 42) by turning it on by hand until the gasket contacts the filter head, then tighten the filter 3/4 turn further.
8. Check the hydraulic fluid level and add the specified hydraulic fluid as needed; refer to Checking the Hydraulic-Fluid Level (page 32)
9. Install the center shroud.

Changing the Hydraulic Fluid

Service Interval: Every 2,000 hours—**If you are using the recommended hydraulic fluid,** change the hydraulic fluid.

Every 800 hours—**If you are not using the recommended hydraulic fluid or have ever filled the reservoir with an alternative fluid,** change the hydraulic fluid.

Reservoir capacity: 26.5 L (7.0 US gallons)

Use a genuine Toro filter for replacement; refer to the *Parts Catalog* for your machine.

1. Remove the cap from the hydraulic reservoir (Figure 43).

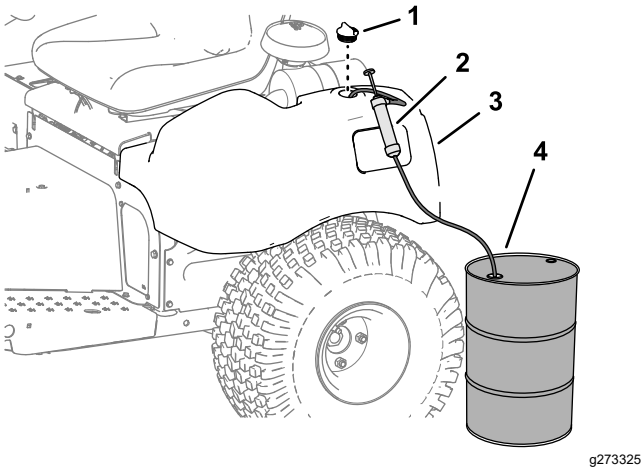

Figure 43

1. Cap
2. Pump
3. Hydraulic reservoir
4. Waste hydraulic-fluid container—30 L (8 US Gallon) or greater

2. Pump the hydraulic fluid from hydraulic reservoir (Figure 43).
3. Fill the hydraulic reservoir with the specified hydraulic fluid until the level is up to the necked-down area of the dipstick; refer to Checking the Hydraulic-Fluid Level (page 32).

   Important: **Do not overfill the tank with hydraulic fluid.**
4. Start and run the engine. Operate the lift cylinder until it extends and retracts and forward and reverse wheel motion is achieved.
5. Shut off the engine and check the hydraulic-fluid level in the reservoir; add fluid if necessary.
6. Check for leaks.

   Repair any hydraulic leaks.
7. Install the center shroud.

Cleaning

Cleaning and Inspecting the Machine

Service Interval: After each use

1. Thoroughly wash the machine with a garden hose—without a nozzle—so that excessive water pressure does not cause contamination and damage to the seals and bearings.

   Make sure that the cooling fins and the area around the cooling-air intake are kept free of debris.

   Important: **Cleaning the oil cooler with water promotes premature corrosion and damage to components, and compacts debris; refer to Cleaning the Oil Cooler (page 34).**
2. Inspect the machine for possible hydraulic-fluid leaks, damage, or wear to hydraulic and mechanical components.

Cleaning the Oil Cooler

Service Interval: Every 500 hours

1. Remove the lower shield (Figure 44).

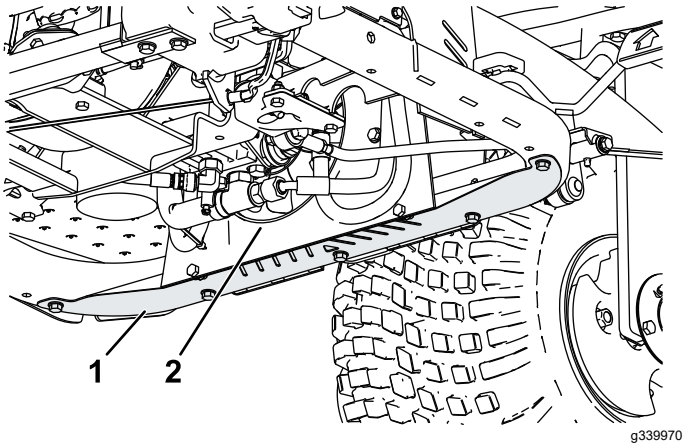

Figure 44

1. Shield
2. Oil cooler

2. Using a wand, blow compressed air in between the fan blades (Figure 44) to force material out from the direction that it entered.
3. Install the shield.

Storage

Preparing the Machine

1. Thoroughly clean the machine, the attachments, and the engine.
2. Park the machine on a level surface; engage the parking brake; shut off the engine; remove the key; and wait for all movement to stop before leaving the machine.
3. Check the tire pressure; refer to Checking the Tire Pressure (page 29).
4. Check all fasteners for looseness; tighten as necessary.
5. Grease or oil all grease fittings and pivot points; refer to Greasing the Machine (page 22).
6. Lightly sand and use touch-up paint on painted areas that are scratched, chipped, or rusted.

Preparing the Engine

1. Change the engine oil and filter; refer to Changing the Engine Oil and Filter (page 24).
2. Start the engine and run it at idle speed for 2 minutes.
3. Shut off the engine; remove the key; and wait for all movement to stop before leaving the machine.
4. Thoroughly clean and service the air-cleaner assembly; refer to Servicing the Air Cleaner (page 25).
5. Seal the air-cleaner inlet and the exhaust outlet with weatherproof masking tape.
6. Check the oil-filler cap and the fuel-tank cap to ensure that they are securely in place.

Preparing the Battery

1. Remove the battery terminals from the battery posts.
2. Clean the battery, terminals, and posts with a wire brush and a baking-soda solution.
3. Coat the cable terminals and battery posts with Grafo 112X skin-over grease (Toro Part No. 505-47) to prevent corrosion.
4. Slowly charge the battery for 24 hours every 60 days to prevent lead sulfation of the battery.

   Note: The specific gravity of a fully charged battery measures 1.250.

Note: Store the battery in a cool atmosphere to avoid quick deterioration of the charge in the battery. To prevent the battery from freezing, make sure that it is fully charged.

Notes:

Notes:

Notes:

California Proposition 65 Warning Information

What is this warning?

You may see a product for sale that has a warning label like the following:



WARNING: Cancer and Reproductive Harm—www.p65Warnings.ca.gov.

What is Prop 65?

Prop 65 applies to any company operating in California, selling products in California, or manufacturing products that may be sold in or brought into California. It mandates that the Governor of California maintain and publish a list of chemicals known to cause cancer, birth defects, and/or other reproductive harm. The list, which is updated annually, includes hundreds of chemicals found in many everyday items. The purpose of Prop 65 is to inform the public about exposure to these chemicals.

Prop 65 does not ban the sale of products containing these chemicals but instead requires warnings on any product, product packaging, or literature with the product. Moreover, a Prop 65 warning does not mean that a product is in violation of any product safety standards or requirements. In fact, the California government has clarified that a Prop 65 warning "is not the same as a regulatory decision that a product is 'safe' or 'unsafe.'" Many of these chemicals have been used in everyday products for years without documented harm. For more information, go to https://oag.ca.gov/prop65/faqs-view-all.

A Prop 65 warning means that a company has either (1) evaluated the exposure and has concluded that it exceeds the "no significant risk level"; or (2) has chosen to provide a warning based on its understanding about the presence of a listed chemical without attempting to evaluate the exposure.

Does this law apply everywhere?

Prop 65 warnings are required under California law only. These warnings are seen throughout California in a wide range of settings, including but not limited to restaurants, grocery stores, hotels, schools, and hospitals, and on a wide variety of products. Additionally, some online and mail order retailers provide Prop 65 warnings on their websites or in catalogs.

How do the California warnings compare to federal limits?

Prop 65 standards are often more stringent than federal and international standards. There are various substances that require a Prop 65 warning at levels that are far lower than federal action limits. For example, the Prop 65 standard for warnings for lead is 0.5 µg/day, which is well below the federal and international standards.

Why don't all similar products carry the warning?

- Products sold in California require Prop 65 labelling while similar products sold elsewhere do not.
- A company involved in a Prop 65 lawsuit reaching a settlement may be required to use Prop 65 warnings for its products, but other companies making similar products may have no such requirement.
- The enforcement of Prop 65 is inconsistent.
- Companies may elect not to provide warnings because they conclude that they are not required to do so under Prop 65; a lack of warnings for a product does not mean that the product is free of listed chemicals at similar levels.

Why does Toro include this warning?

Toro has chosen to provide consumers with as much information as possible so that they can make informed decisions about the products they buy and use. Toro provides warnings in certain cases based on its knowledge of the presence of one or more listed chemicals without evaluating the level of exposure, as not all the listed chemicals provide exposure limit requirements. While the exposure from Toro products may be negligible or well within the "no significant risk" range, out of an abundance of caution, Toro has elected to provide the Prop 65 warnings. Moreover, if Toro does not provide these warnings, it could be sued by the State of California or by private parties seeking to enforce Prop 65 and subject to substantial penalties.



Count on it.