Form No. 3450-327 Rev A

TORO®

Count on it.

Operator's Manual

Groundsmaster® 1200 Series Pull Behind Rotary Mower

Model No. 31905—Serial No. 410400000 and Up

Register at www.Toro.com.
Original Instructions (EN)

CE UK CA

3450-327

This product complies with all relevant European directives; for details, please see the separate product specific Declaration of Conformity (DOC) sheet.

This machine has been designed in accordance with ANSI B71.4-2017.

⚠ WARNING

CALIFORNIA
Proposition 65 Warning

Use of this product may cause exposure to chemicals known to the State of California to cause cancer, birth defects, or other reproductive harm.

Introduction

This machine is intended for use by professional, hired operators in commercial applications. It is designed for mowing grass on well-maintained lawns in parks, golf courses, sports fields, and on commercial grounds.

Important: **Read this information carefully to learn how to operate and maintain your product properly and to avoid injury and product damage. You are responsible for operating the product properly and safely.**

Visit www.Toro.com for product safety and operation training materials, accessory information, help finding a dealer, or to register your product.

Whenever you need service, genuine Toro parts, or additional information, contact an Authorized Service Dealer or Toro Customer Service and have the model and serial numbers of your product ready. Figure 1 identifies the location of the model and serial numbers on the product. Write the numbers in the space provided.

Important: **With your mobile device, you can scan the QR code on the serial-number decal (if equipped) to access warranty, parts, and other product information.**

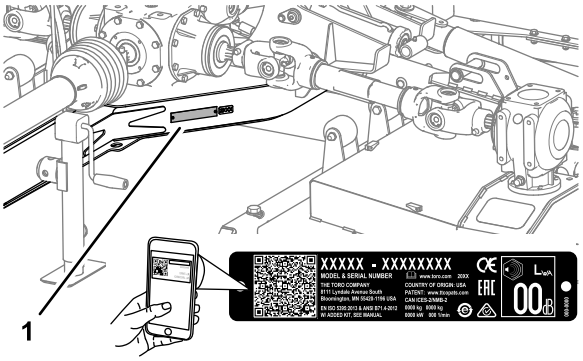

g249978

Figure 1

1. Model and serial number location

Model No. _____

Serial No. _____

This manual identifies potential hazards and has safety messages identified by the safety-alert symbol (Figure 2), which signals a hazard that may cause serious injury or death if you do not follow the recommended precautions.



g000502

Figure 2

1. Safety-alert symbol

This manual uses 2 words to highlight information. **Important** calls attention to special mechanical information and **Note** emphasizes general information worthy of special attention.

© 2021—The Toro® Company
8111 Lyndale Avenue South
Bloomington, MN 55420

Contact us at www.Toro.com.
Printed in the USA
All Rights Reserved

Contents

Safety 4
General Safety 4
Safety and Instructional Decals 4
Setup 6
1 Applying the Entanglement Decal 6
2 Installing the Deck Cover Knobs 7
3 Adjusting the Drawbar Position of the Tow Vehicle 7
4 Adjusting the Tow Bar of the Mower 7
5 Adjusting the Clevis Hitch 8
6 Assembling the PTO Driveshaft 9
7 Installing the Deck-Lock Rope to the Mower 10
Product Overview 11
Specifications 12
Attachments/Accessories 12
Before Operation 12
Before Operation Safety 12
Tractor Controls 13
Outcross Traction Unit Controls 13
PTO Speed 13
Training Period 13
Checking the Tire Air Pressure 14
Checking the PTO and Driveshaft Guards 14
Using the Tow Bar Jack 16
Assembling the Mower to the Tow Vehicle 17
During Operation 21
During Operation Safety 21
Slope Safety 22
Lowering the Mower Decks from the Transport Position 22
Raising the Mower Decks while Cutting Grass 23
Raising the Mower Decks to the Transport Position 24
Adjusting the Height-of-Cut 24
Making a Sharp Turn 25
After Operation 26
After Operation Safety 26
Clean and Inspect 26
Tie-Down Points 26
Transporting the Machine 26
Maintenance 27
Recommended Maintenance Schedule(s) 27
Lifting the Mower 28
Accessing the Mower Decks 28
Lubrication 29
Servicing the Gearboxes 32
Checking the Mower Belts 35
Replacing the Mower Belts 35
Servicing the Blades 37
Adjusting the Mower Pitch 41
Adjusting the Rear-Mower Deck Locks 43
Storage 44
Storing the Machine 44

Safety

General Safety

This product is capable of amputating hands and feet and of throwing objects. Always follow all safety instructions to avoid serious personal injury

- Read and understand the contents of this *Operator's Manual* before starting the machine.
- Use your full attention while operating the machine. Do not engage in any activity that causes distractions; otherwise, injury or property damage may occur.
- Do not put your hands or feet near moving components of the machine.
- Do not operate the machine without all guards and other safety protective devices in place and functioning properly on the machine.
- Keep clear of any discharge opening.
- Keep bystanders and children out of the operating area. Never allow children to operate the machine.
- Before you leave the operator's position, do the following:
  - Park the machine on a level surface.
  - Lower the cutting unit(s).
  - Disengage the drives.
  - Engage the parking brake (if equipped).
  - Shut off the engine and remove the key.
  - Wait for all movement to stop.

Improperly using or maintaining this machine can result in injury. To reduce the potential for injury, comply with these safety instructions and always pay attention to the safety-alert symbol ⚠, which means Caution, Warning, or Danger—personal safety instruction. Failure to comply with these instructions may result in personal injury or death.

Safety and Instructional Decals

Safety decals and instructions are easily visible to the operator and are located near any area of potential danger. Replace any decal that is damaged or missing.



decal110-4668

110-4668

1. Entanglement hazard, shaft—stay away from moving parts.
2. PTO speed and input direction.
3. Use clip to secure lash cable when not in use. Use lash cable to support the power take-off when the machine is disconnected from tractor.

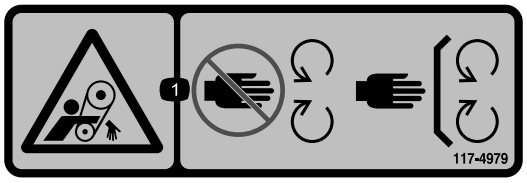

decal117-4979

117-4979

1. Entanglement hazard, belt—keep away from moving parts; keep all guards and shields in place.



decal119-6807

119-6807

1. Warning—no step

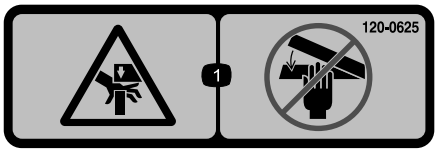

decal120-0625

120-0625

1. Pinch point, hand—keep hands away.

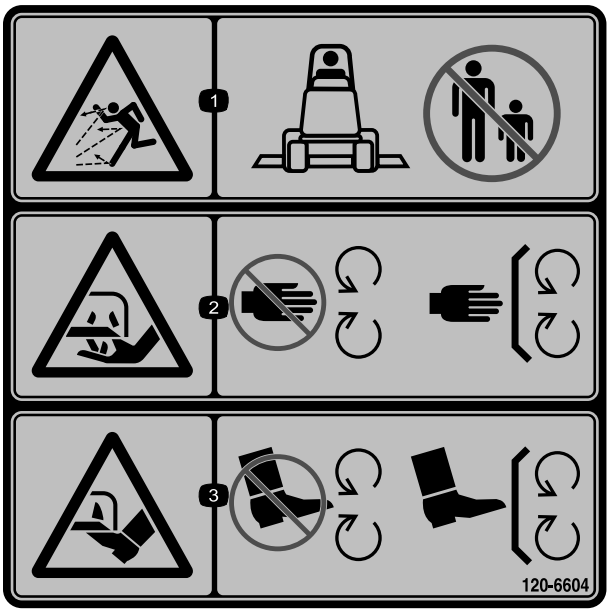

decal120-6604

120-6604

1. Thrown object hazard—keep bystanders away from the machine.
2. Cutting/dismemberment hazard of hand, mower blade—stay away from moving parts; keep all guards and shields in place.
3. Cutting/dismemberment hazard of foot, mower blade—stay away from moving parts; keep all guards and shields in place.

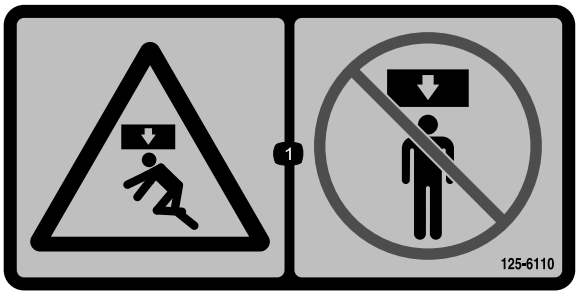

decal125-6110

125-6110

1. Crushing hazard—do not stand under any part of the machine.



decal133-8061

133-8061

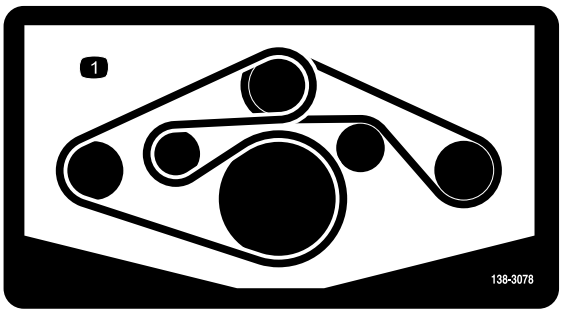

decal138-3078

138-3078

1. Belt routing

CE entanglement decal 138-9038

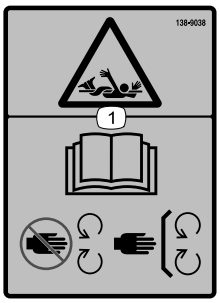

decal138-9038

138-9038

1. Entanglement hazard—read the *Operator's Manual*; stay away from moving parts; keep all guards and shields in place.

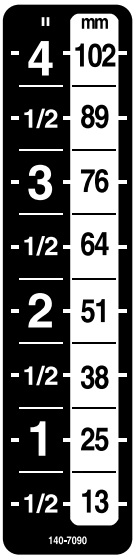

decal140-7090

140-7090

Setup

Loose Parts

Use the chart below to verify that all parts have been shipped.

Procedure	Description	Qty.	Use
1	CE entanglement decal	4	Apply the entanglement decal—CE mowers
2	Knob	6	Install the deck cover knobs.
3	No parts required	–	Adjust the drawbar position of the machine.
4	No parts required	–	Adjust the tow bar of the mower
5	Hitch Pin Hairpin Cotter	2 2	Adjust the transport frame hitch.
6	PTO driveshaft half (forward)	1	Assembling the PTO driveshaft.
7	Deck-lock rope	1	Route the deck latch rope at the mower.

Media and Additional Parts

Description	Qty.	Use
Operator's Manual	1	Read this manual before using the pull behind rotary mower.

1

Applying the Entanglement Decal

CE Mowers

Parts needed for this procedure:

4	CE entanglement decal

Procedure

Important: **This procedure is required for all CE countries and anywhere English is not commonly spoken.**

1. Rotate the shaft guard to access the existing entanglement decal (Figure 3).

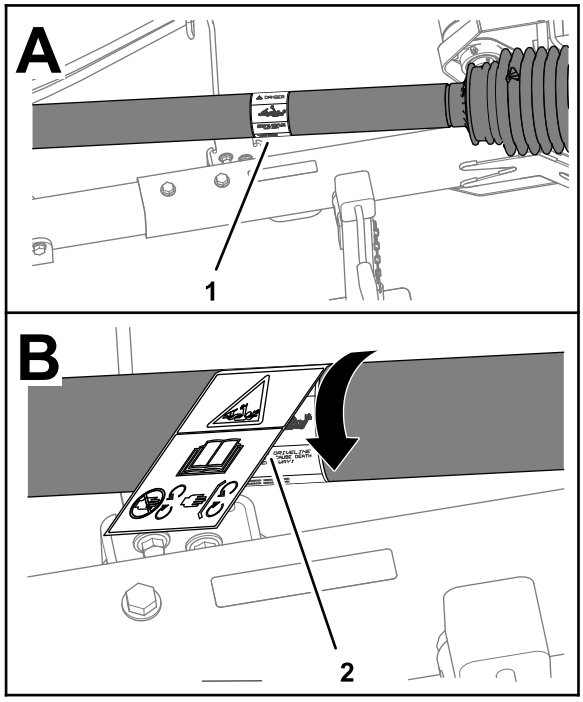

g270806

Figure 3

1. Existing entanglement decal
2. CE entanglement decal

2. Clean the existing entanglement decal and the guard area surrounding the decal.
3. Remove the backing from the CE entanglement decal.
4. Place the CE entanglement decal over the existing entanglement decal (Figure 3).
5. Repeat steps 1 through 4 for the 3 other shaft guards.

2

Installing the Deck Cover Knobs

Non-CE Mowers

Parts needed for this procedure:

6	Knob

Procedure

1. Remove the mower deck covers; refer to Removing the Deck Covers (page 28).
2. Remove the push-nut that secures the bolt to the deck cover and remove the bolt from the cover (Figure 4).

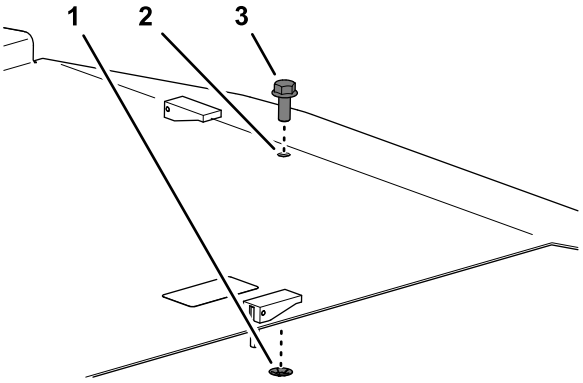

g264078

Figure 4

1. Bolt
2. Deck cover
3. Push-nut

3. Install the mower deck cover with the knob; refer to Installing the Deck Covers (page 29).
4. Repeat steps 1 through 3 for the remaining deck covers,

3

Adjusting the Drawbar Position of the Tow Vehicle

No Parts Required

Procedure

Adjust the drawbar (Figure 5) of the tow vehicle to the extended position; refer to the *Operator's Manual* for your tow vehicle.

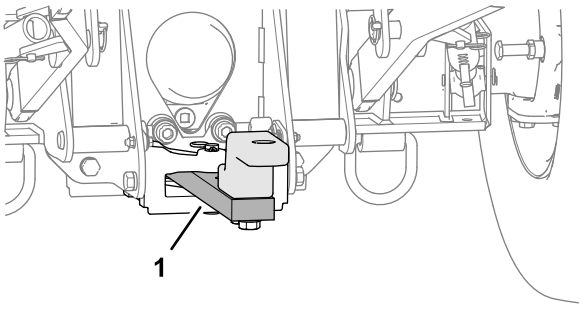

g250235

Figure 5

1. Drawbar (extended position)

4

Adjusting the Tow Bar of the Mower

No Parts Required

Assessing the Job Site

Consider the following job site conditions to determine the tow bar position of the mower:

- Turf with hills and dips in the contour—set the tow bar to a shorter length.
- Turf that is primarily flat—set the tow bar to a longer length.

Note: You may need to try an intermediate position tow-bar length when job site has a mixture of flat and hilly areas.

Adjusting the Tow-Bar Length

Note: The tow bar of the mower has 5 tow-bar positions allowing you to adjust the length 20 cm (8 inches).

1. Remove the 2 flange locknuts, 2 capscrews, and 2 washers that secure the hitch tube to the receiver tube (Figure 6).

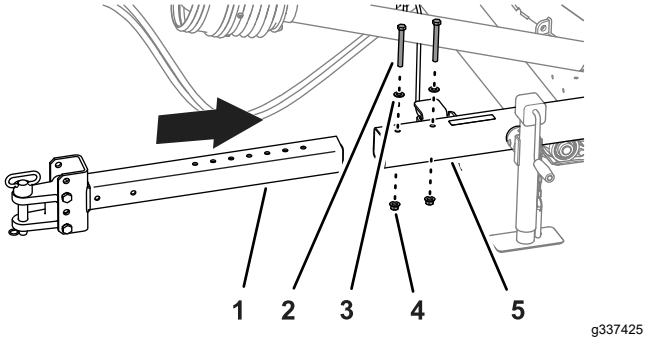

Figure 6

1. Hitch tube
2. Capscrew
3. Washer
4. Flange nut
5. Receiver tube

2. Adjust the position of the hitch tube in the receiver tube according to the position that you determined in Assessing the Job Site (page 8).
3. Assemble the hitch tube to the receiver tube with the flange locknuts, capscrews, and washers that you removed in step 1.
4. Torque the nuts and capscrews to 91 to 113 N·m (67 to 83 ft-lb).

5

Adjusting the Clevis Hitch

Parts needed for this procedure:

2	Hitch Pin
2	Hairpin Cotter

Procedure

Note: Contact your authorized Toro distributor to obtain the optional pintle hitch.

1. Measure the height from the ground to the top of the hitch on the tow vehicle.
2. Adjust the transport frame hitch up or down according to the measurement of the machine hitch. Use the appropriate mounting holes as shown in the table below and in Figure 7.

Tow Vehicle Hitch Height	Frame Mounting Holes
Below 36 cm (14 inches)	Use holes 2 and 4
Above 36 cm (14 inches)	Use holes 1 and 3

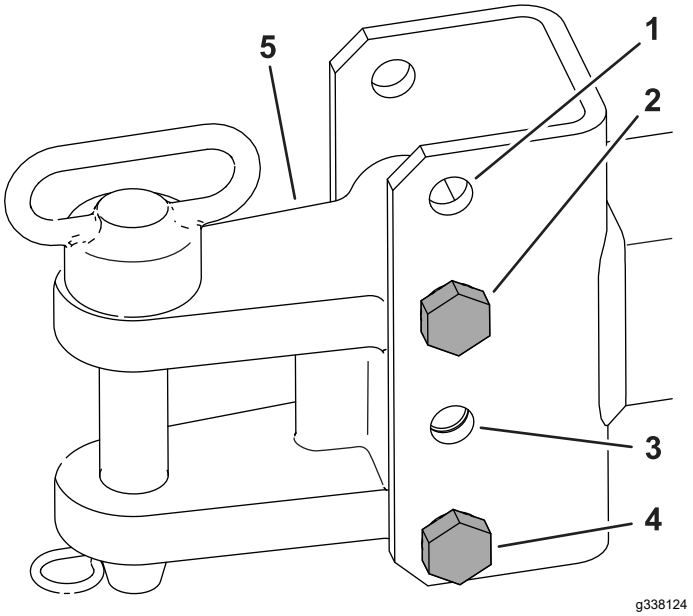

Figure 7

1. Hole 1
2. Hole 2
3. Hole 3
4. Hole 4
5. Hitch

3. Secure the frame hitch to the machine hitch with the hitch pin and hairpin; refer to Connecting the Mower to the Tow Vehicle (page 18).

4. Remove the ball pin from the jack and rotate the jack so that it is in storage position. Install the ball pin to secure it in the storage position.

6

Assembling the PTO Driveshaft

Parts needed for this procedure:

1	PTO driveshaft half (forward)

Procedure

1. Align the inner tube of the rear PTO-driveshaft half with the outer tube of the forward PTO-driveshaft half, and slip the tubes together (Figure 8).

   Important: **The ends of the inner and outer PTO driveshaft tubes assemble only 1 way—do not force them together.**

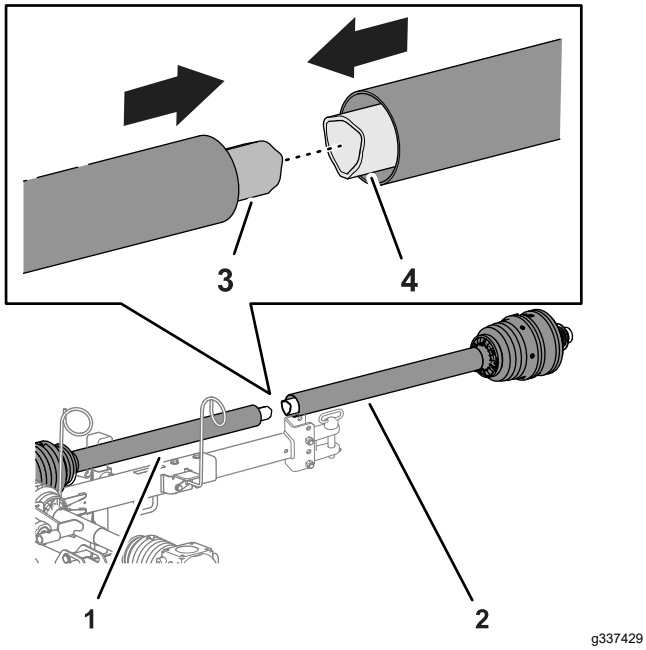

Figure 8

1. Rear PTO driveshaft half
2. Forward PTO driveshaft half
3. Inner tube
4. Outer tube

2. Move the PTO driveshaft onto the driveshaft rest of the hose guide (Figure 9).

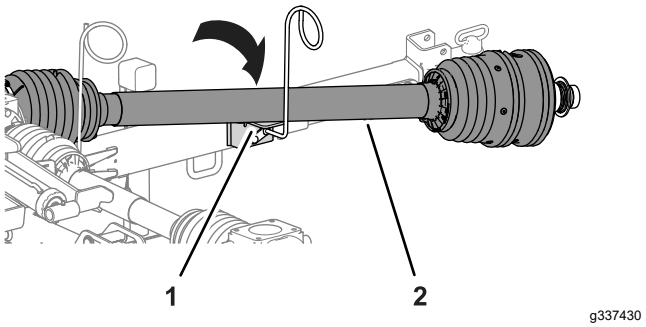

Figure 9

1. Driveshaft rest (hose guide)
2. PTO driveshaft

3. Partially extend the PTO driveshaft to access the grease fitting near the middle of the inboard driveshaft guard (Figure 10).

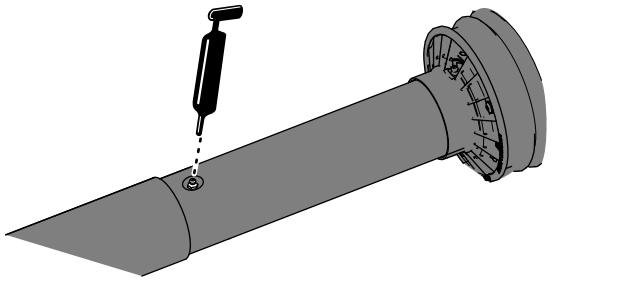

Figure 10

4. Apply grease to the grease fitting for the telescoping driveshaft joint as shown in Figure 10.

7

Installing the Deck-Lock Rope to the Mower

Parts needed for this procedure:

1	Deck-lock rope

Procedure

1. Thread the end of the deck-lock rope through the hole in the lock lever and tie the rope securely (Figure 11).

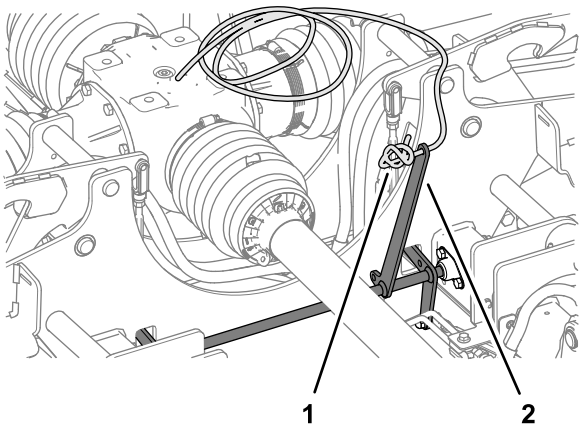

g272421

Figure 11

1. Deck-lock rope
2. Lock lever

2. Route the free end of the deck-lock rope from the lock lever through the 2 hose guides (Figure 12).

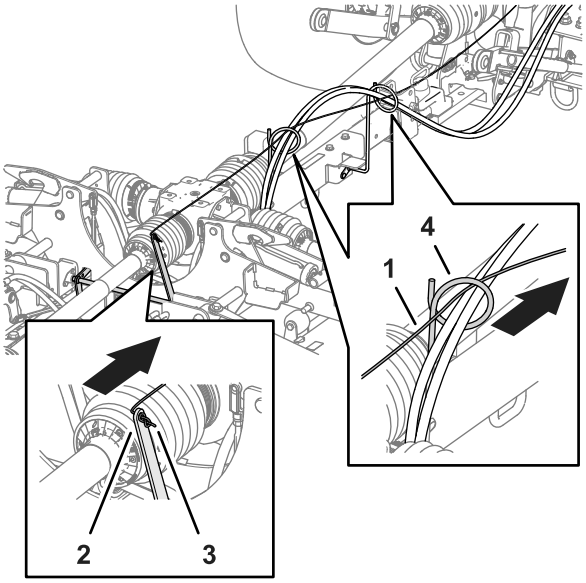

g337426

Figure 12

1. Deck-lock rope
2. Lock lever
3. Knotted end of the deck-lock rope
4. Hose guide

Product Overview

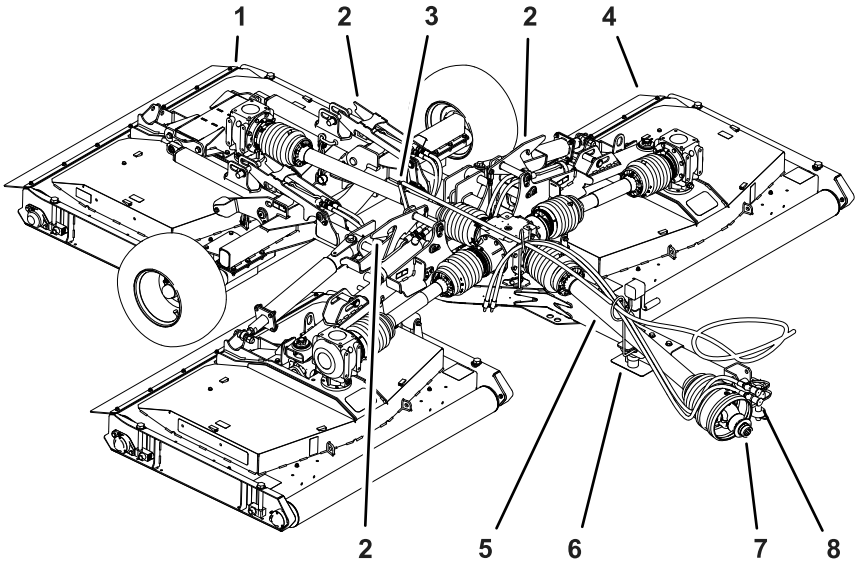

g337427

Figure 13

1. Rear mower deck
2. Deck lock
3. Lock lever
4. Outer mower deck
5. Guard (PTO driveshaft)
6. Hose guide and driveshaft rest
7. Quick-connect coupling (PTO driveshaft)
8. Hydraulic hoses

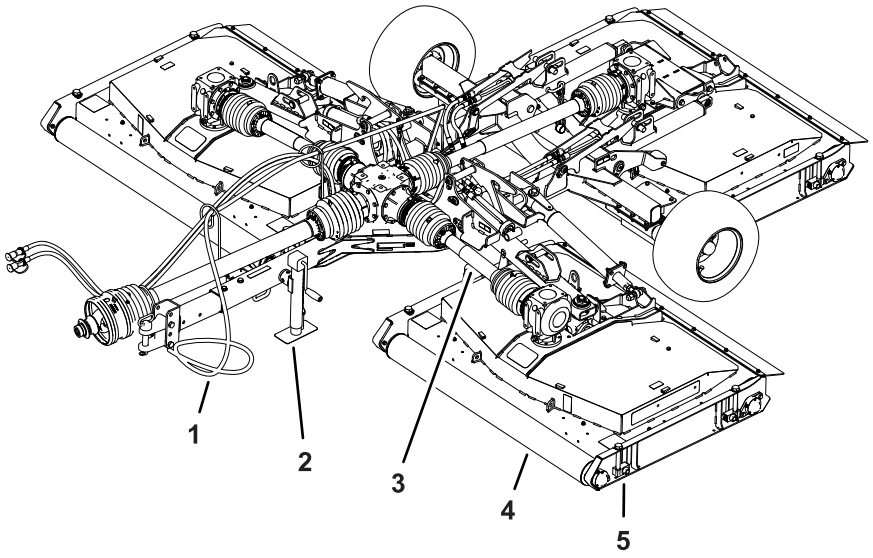

g337428

Figure 14

1. Deck-lock rope
2. Jack
3. Guard (deck driveshaft)
4. Roller
5. Height-of-cut adjuster

Specifications

Note: Specifications and design are subject to change without notice.

Tow Vehicle Specification

Minimum PTO output-power rating	26 Kw (35 hp)
Recommended PTO speed	540 rpm
PTO Rotation	Clockwise (viewed from behind the tow vehicle)
PTO spindle	34.8 mm (1-3/8 inch) diameter, 6-spline
Minimum hydraulic pressure	13 790 Kpa (2000 psi)
Tow system	Drawbar and pin—25 mm (1 inch) diameter
	Clevis hitch (see an authorized Toro distributor for an optional pintle hitch)

Mower Specification

Weight		1354 kg (2984 lb)
Tongue weight		313 kg (691 lb)
Width	Mow position	381 cm (150 inches)
	Transport position—13 mm (1/2 inch) HOC	218 cm (86 inches)
Height	Mow position	78 cm (31 inches)
	Transport position	193 cm (76 inches)
Length	Hitch fully extend	371 cm (146 inches)
Width of cut		365 cm (144 inches)
Cut height		13 to 102 mm (1/2 to 4.0 inches)
Cutting Capacity	9.7 km/h (6 mph)	3.5 hectar / hr (8.7 acres / hr)
Maximum Transport Speed		30 kph (19 mph)

Attachments/Accessories

A selection of Toro approved attachments and accessories is available for use with the machine to enhance and expand its capabilities. Contact your Authorized Service Dealer or Distributor or go to www.Toro.com for a list of all approved attachments and accessories.

To ensure optimum performance and continued safety certification of the machine, use only genuine Toro replacement parts and accessories. Replacement parts and accessories made by other manufacturers could be dangerous, and such use could void the product warranty.

Operation

Before Operation

Before Operation Safety

General Safety

- Never allow children or untrained people to operate or service the machine. Local regulations may restrict the age of the operator. The owner is responsible for training all operators and mechanics.
- Keep your hands clear of the joint pivot areas when handling the PTO driveshaft.
- Do not step on, over or under the PTO or driveshafts.
- Become familiar with the safe operation of the equipment, operator controls, and safety signs.
- Know how to stop the machine and shut off the engine quickly.
- Do not use PTO spline adapters or extensions.

- Use only a tow vehicle with the mower that has a maximum PTO speed of 540 rpm (9 rotations per second).
- Ensure that the guards and shields are properly installed and maintained. Replace missing, damaged, or worn guards and shields before using the machine.
- Ensure that the PTO driveshaft does not contact the drawbar
- Before mowing, always inspect the machine to ensure that the blades, blade bolts, and cutting assemblies are in good working condition. Replace worn or damaged blades and bolts in sets to preserve balance.
- Inspect the area where you will use the machine and remove all objects that the machine could throw.
- Ensure that your tow vehicle is suitable for use with a mower of this weight by checking with your tow vehicle supplier or manufacturer.

Tractor Controls

Become familiar with operating the following tractor controls before you operate the mower:

- PTO engagement
- Engine/PTO speed
- The rear attachment control (raise/lower)
- Auxiliary valve operation
- Clutch
- Throttle
- Gear selection
- Parking brake

Important: **Refer to the tractor *Operator's Manual* for operating instructions.**

Outcross Traction Unit Controls

Refer to the Outcross traction unit *Operator's Manual* for information on controls and operation, as well as additional information on setting up the vehicle for this attachment.

PTO Speed

The mower is designed to operate with a PTO speed of up to 540 rpm. Most tow vehicles indicate a 540 PTO rpm position on the tachometer.

Training Period

Before using the mower, find a clear area and practice using the it. Operate the tow vehicle at recommended gear settings and PTO drive speeds and become thoroughly familiar with driving characteristics of the tow vehicle and the mower. Practice raising and lowering mower decks, stopping, and starting the PTO drive, and aligning the machine with previous passes. Practice sessions increase confidence in the operating the mower and helps ensure use of proper techniques cutting grass.

⚠ CAUTION

A running attachment can cause personal injury.

To avoid personal injury, do not leave the operator's seat without first disengaging the PTO drive, engaging the parking brake, shutting off the engine, and removing the key. Ensure that all safety devices are secured in their proper place before resuming operation.

Checking the Tire Air Pressure

Service Interval: Before each use or daily

⚠ DANGER

Low tire pressure decreases mower stability when transporting it. This could cause a rollover, which may result in personal injury or death.

Do not operate the mower with underinflated tires.

1. Check the tire air pressure daily.

   You should measure 207 kPa (30 psi).

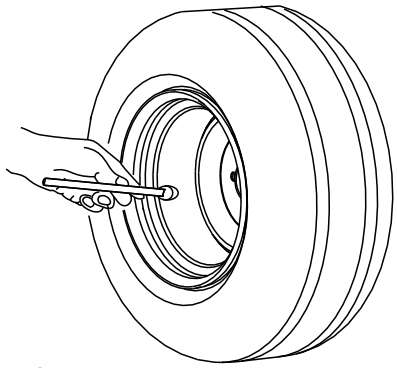

g001055

Figure 15

2. If the tire air pressure is not 30 psi, add air to or remove air from the tires.

Checking the PTO and Driveshaft Guards

Service Interval: Before each use or daily

1. If installed to the tow vehicle, remove the driveshaft.
2. Rotate the forward half of the PTO shaft guard a full rotation (Figure 16).

   Note: Clean or replace the shaft guard if it does not rotate freely.

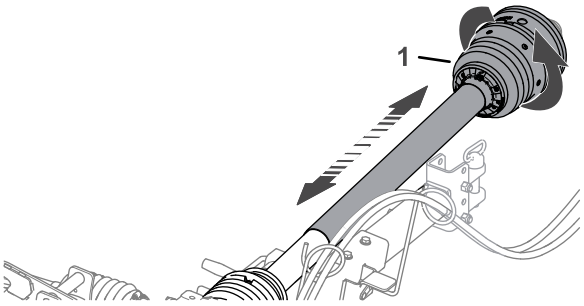

g337431

Figure 16

1. PTO shaft guard (forward half)

3. Move the forward half of the PTO shaft guard together and apart to ensure that they telescope freely (Figure 16).

   Note: Clean or replace the shaft guard is it does not telescope freely.

4. If removed from the tow vehicle, install the driveshaft; refer to Connecting the Driveshaft to the PTO (page 19).
5. Check that the restraint chain is installed between the forward PTO shaft guard and a stationary part on the tow vehicle (Figure 17).

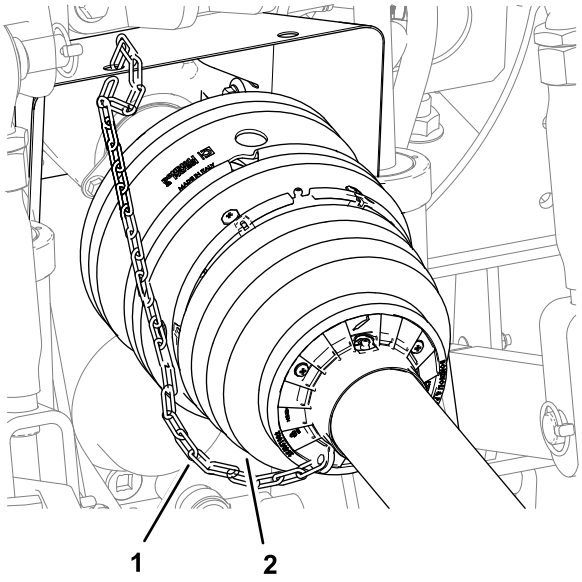

g264215

Figure 17

1. PTO-shaft guard (forward half)
2. Restraint chain

6. Check that the restraint chains for the driveshaft guards are connected to center gearbox and the gearboxes on each mower deck (Figure 18, Figure 19, Figure 20, and Figure 21).

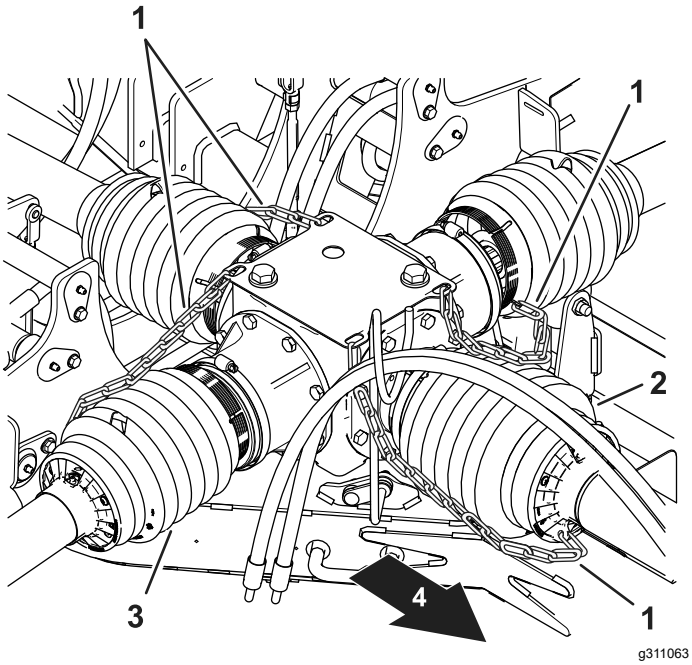

Figure 18
Center Gearbox

1. Restraint chain
2. PTO shaft guard
3. Driveshaft guard
4. Front of the machine

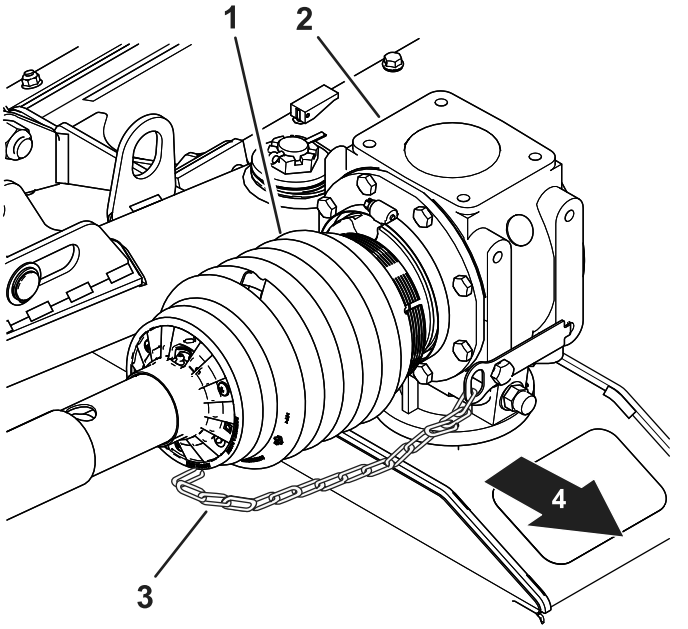

Figure 19
Left Deck Driveshaft Guard

1. Driveshaft guard
2. Left gearbox
3. Restraint chain
4. Front of the machine

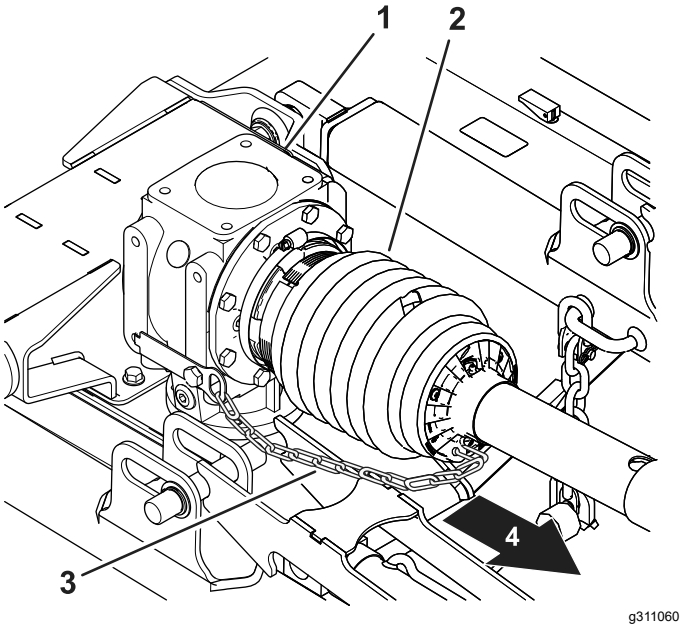

Figure 20
Center Deck Driveshaft Guard

1. Center deck gearbox
2. Driveshaft guard (center deck)
3. Restraint chain
4. Front of the machine

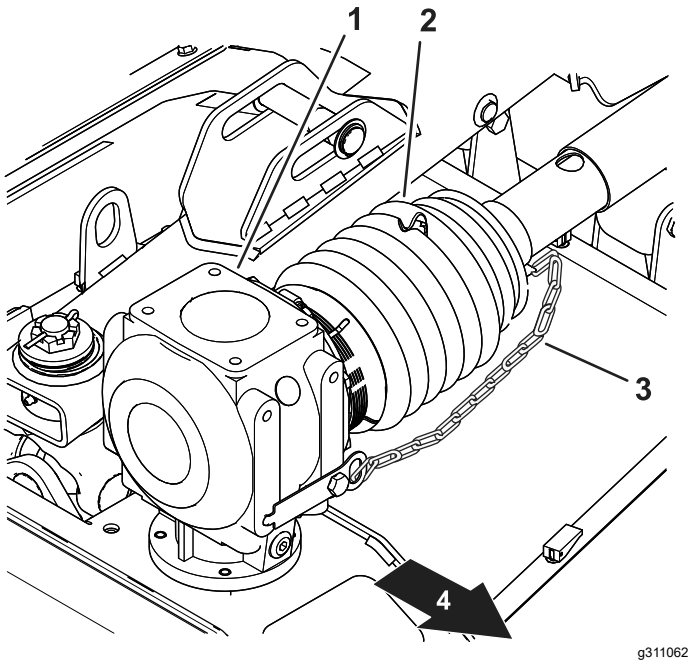

Figure 21
Right Deck Driveshaft Guard

1. Deck gearbox
2. Driveshaft guard
3. Restraint chain
4. Front of the machine

7. Check that the 7 hose clamps firmly secure the driveshaft guards to the center and deck gear boxes (Figure 22).

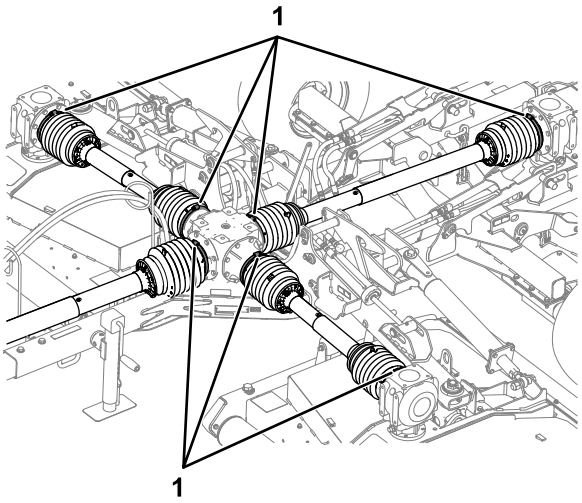

g264297

Figure 22

1. Hose clamps

Using the Tow Bar Jack

Supporting the Mower with the Jack

1. Park the machine on a level surface, move the shift lever to the NEUTRAL position.
2. Engage the parking brake, shut off the engine, remove the key, and wait for all moving parts to stop.
3. Remove the pin and rotate the tow-bar jack vertical (Figure 23).

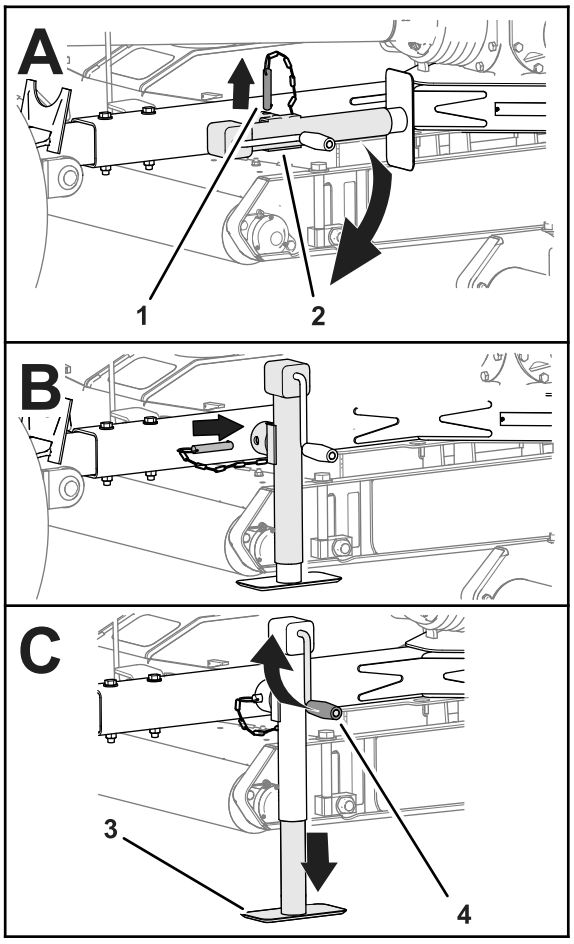

g337432

Figure 23

1. Pin
2. Tow-bar jack
3. Jack pad
4. Jack handle

4. Align the hole in the tow bar with the hole in the jack (Figure 23).
5. Insert the pin through the holes in the tow bar and jack (Figure 23).
6. Rotate the jack handle until the jack fully supports the weight of the mower.
7. Chock both tires of the mower (Figure 24).

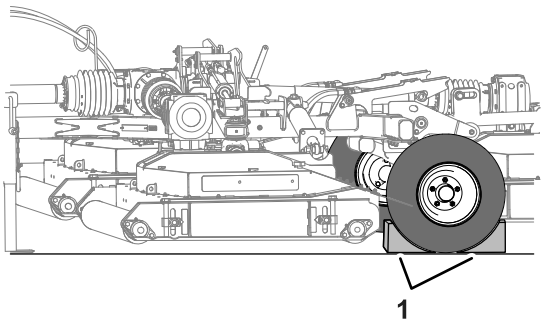

g337433

Figure 24

1. Wheel chocks

8. Disconnect the hydraulic hoses and the PTO driveshaft from the tow vehicle.
9. Disconnect the hitch from the tow bar.
10. Drive the tow vehicle in a straight line away from the mower.

Stowing the Jack

1. Ensure that the mower is securely attached to the tow vehicle.
2. Rotate the jack handle to fully raise the jack pad; refer to Figure 23 in Supporting the Mower with the Jack (page 16).
3. Remove the pin and rotate the tow bar jack horizontal.
4. Align the hole in the tow bar with the hole in the jack.
5. Insert the pin through the holes in the tow bar and jack.

Assembling the Mower to the Tow Vehicle

Preparing the Tow Vehicle and Mower

1. Ensure that the mower is supported with the tow-bar jack; refer to Using the Tow Bar Jack (page 16).
2. Lower the 3-point hitch; refer to the *Operator's Manual* for your tow vehicle.
3. If installed, remove the lynch pin, clevis pin, and upper 3-point link from the upper-link bracket (Figure 25).

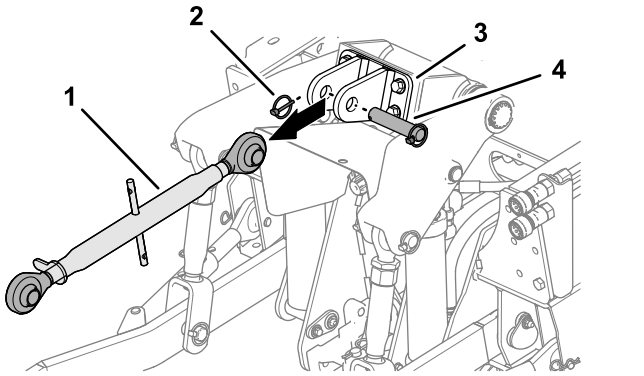

g250419

Figure 25

1. Upper 3-point link
2. Lynch pin
3. Upper-link bracket
4. Clevis pin

4. Adjust the stabilizer arms (Figure 26) outward fully; refer to the *Operator's Manual* for the tow machine.

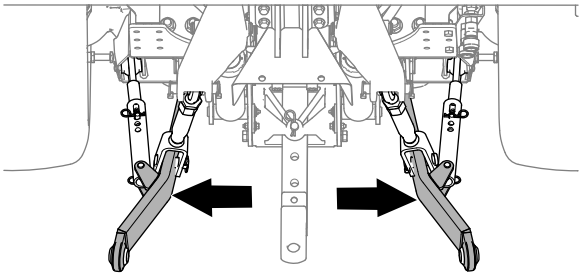

g264148

Figure 26

5. If your mower has a pin tow bar, remove the hairpin and hitch pin from the tow bar.
6. If your tow vehicle has a pintle hitch, open the hitch.

Selecting a Drawbar for the Mower

- Hitch pin-hole diameter: 31.75 mm (1-1/4 inches).
- Working height: 33.4 to 40 cm (13-1/8 to 15-3/4 inches); refer to Figure 27.

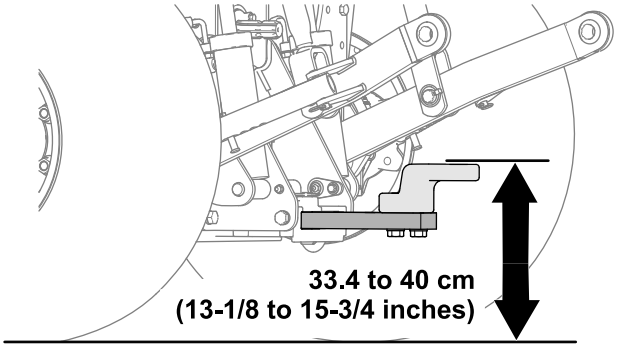

g250512

Figure 27

- Ensure that your drawbar does not interfere with the PTO driveshaft.

Connecting the Mower to the Tow Vehicle

1. Use jack handle to raise or lower the tow bar jack and align the tow bar to the drawbar or pintle hitch (Figure 28).

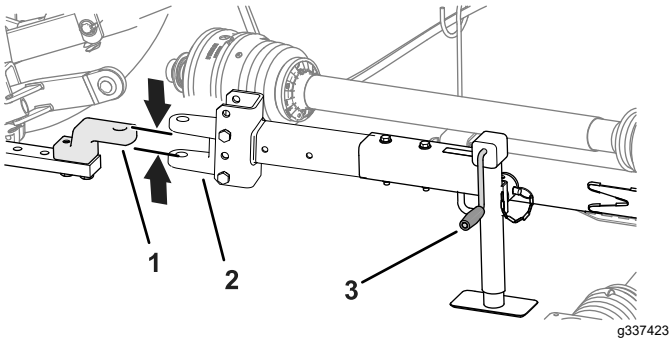

Figure 28

Pin tow bar shown

1. Drawbar
2. Tow bar
3. Jack handle

2. Fully raise the 3-point hitch; refer to the *Operator's Manual* for your tow vehicle.

   Note: When equipped, lock the 3-point hitch.

3. Align the drawbar or pintle hitch of the tow vehicle with the tow bar of the mower (Figure 28).
4. Move the shift lever to the NEUTRAL position, engage the parking brake, shut off the engine remove the, and wait for all moving parts to stop.
5. Secure the tow bar as follows:
   - If your mower has a pin tow bar, insert the hitch pin through the holes in the tow bar and drawbar and secure the pin with the hairpin (Figure 29).

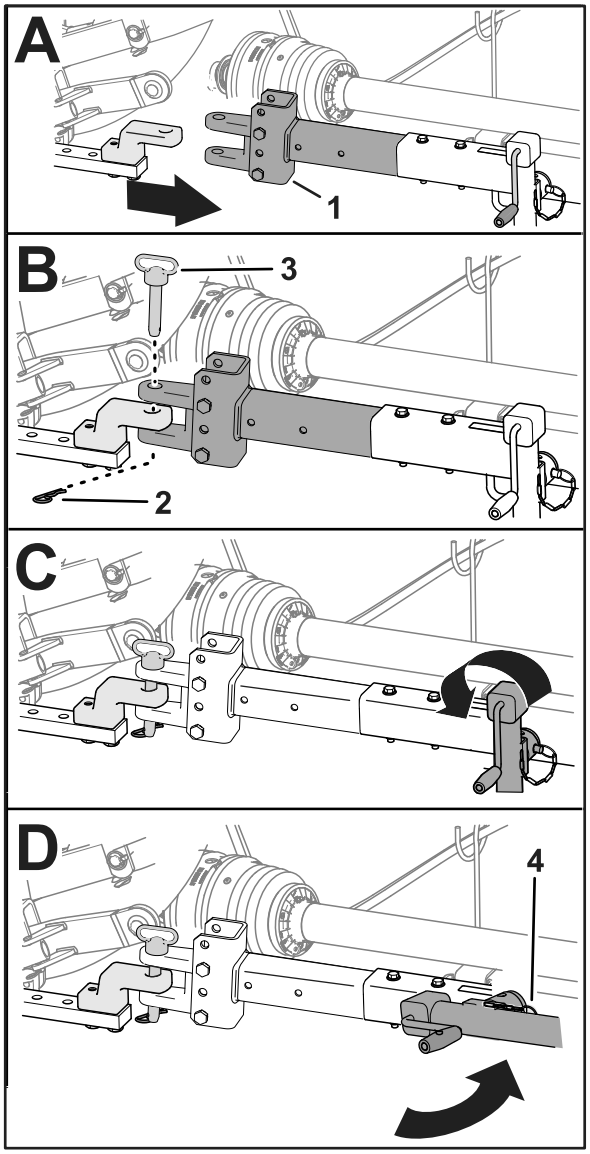

Figure 29

Pin tow bar shown

1. Flange bushing
2. Hairpin
3. Hitch pin
4. Pin

   - If your tow vehicle has a pintle hitch, close and secure the hitch.
6. Fully raise the jack (Figure 29).
7. Remove the pin that secures the jack to the tow bar, rotate the jack horizontal, and secure the hack to the tow bar with the pin (Figure 29).

Connecting the Driveshaft to the PTO

1. Align the quick-connect coupling of the PTO driveshaft with the output shaft of the PTO (Figure 30).

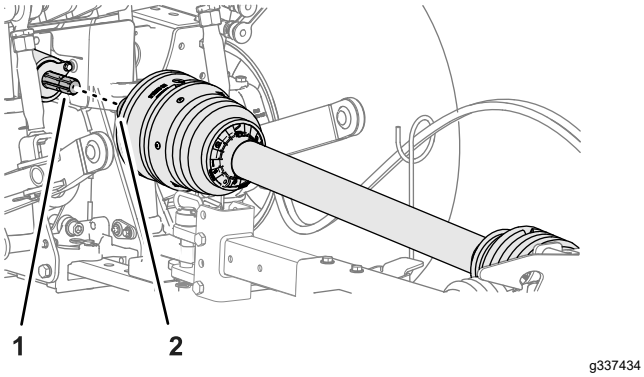

g337434

Figure 30

1. PTO output shaft (machine)
2. Quick-connect coupling (PTO driveshaft)

2. Pull back the lock collar of the quick-connect coupling (Figure 31).

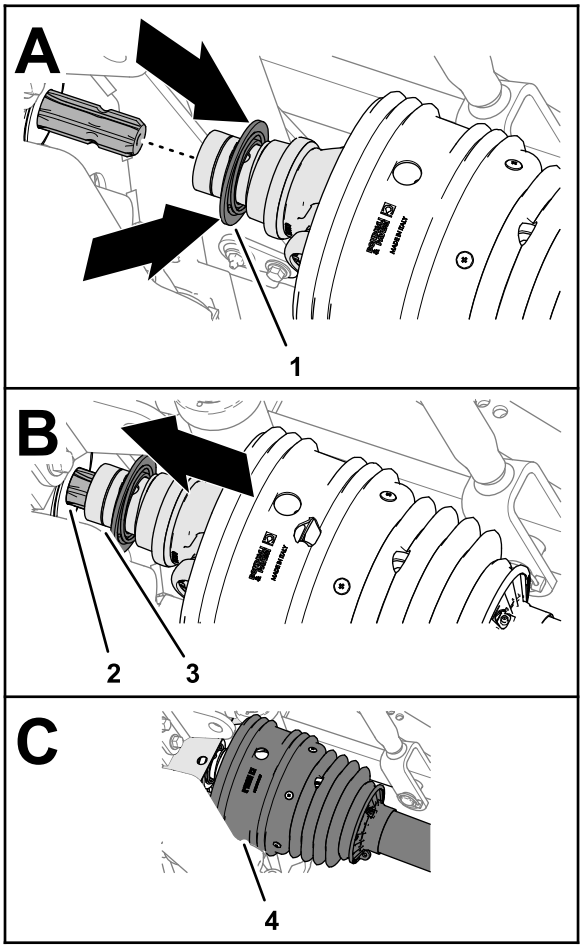

g250500

Figure 31

1. Lock collar (quick-connect coupling)
2. Splines (PTO output shaft)
3. Driveshaft yoke
4. Shield

3. While pulling back the lock collar, pull the PTO driveshaft yoke forward and slip the socket of the coupling over the splines of the PTO output shaft (Figure 31).
4. Ensure that the lock at the quick-connect coupling snaps into the groove of the PTO output shaft securely.
5. Ensure that the shield is positioned over the driveshaft yoke (Figure 31).
6. Attach the restraint chain to a fixed part of the tow vehicle (Figure 32).

Important: **Ensure that there is enough slack in the restraint chain so that you can turn the machine in both directions.**

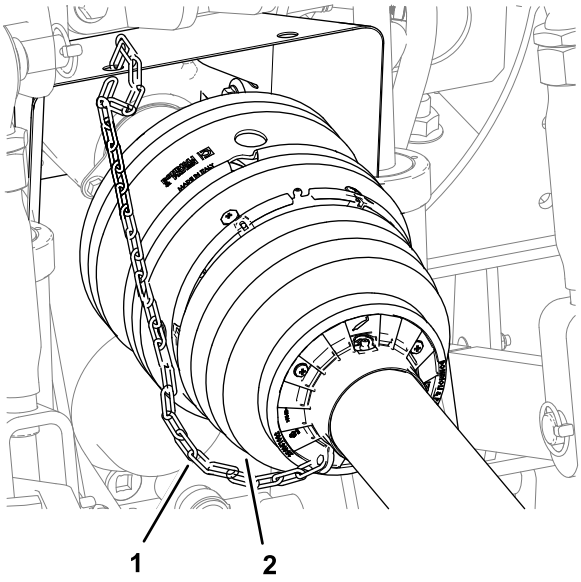

g264215

Figure 32

1. PTO-shaft guard (forward half)
2. Restraint chain

Connecting the Hydraulic Hoses

1. Identify the quick-disconnect fittings for the rear attachment-lift and lower circuits for the tow vehicle.
2. Remove the dust covers from the quick-disconnect fittings of the tow vehicle.
3. Remove the black dust cover from the quick-disconnect fitting of the cylinder-extend hose of the mower
4. Connect the quick-connect fitting cylinder extend hose to the quick-disconnect coupling rear-attachment-lower circuit (Figure 33).

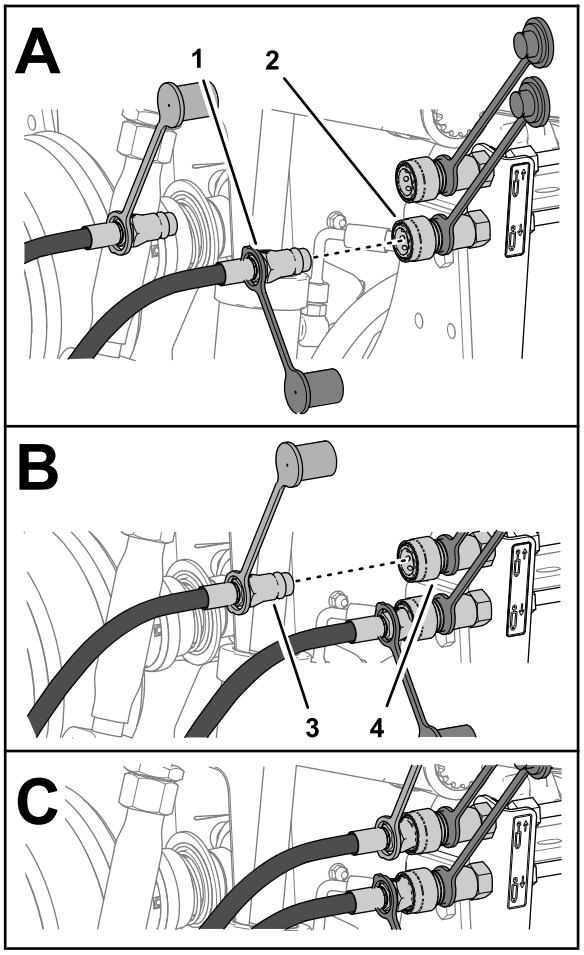

g250538

Figure 33

1. Quick-connect fitting with black dust cap (cylinder-extend hose)
2. Quick-connect coupling (rear attachment-lower circuit)
3. Quick-connect fitting with red dust cap (cylinder-retract hose)
4. Quick-connect coupling (rear attachment-raise circuit)

5. Remove the red dust cover from the quick-disconnect fitting of the cylinder-retract hose of the mower
6. Connect the quick-disconnect fitting of the cylinder retract hose to the quick-disconnect coupling rear-attachment-raise circuit.

Routing the Deck-Lock Rope to the Machine

1. Route the deck-lock rope from the hose guide toward the operator's seat (Figure 34).

   Important: **Ensure that you allow slack in the rope so that the mower can fully turn right and left behind the tow vehicle without adding tension to the rope, but it does not contact the PTO driveshaft.**

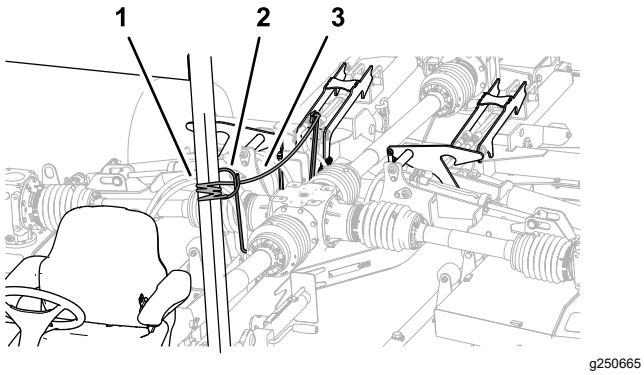

Figure 34

1. Fixed-chassis component
2. Hose guide
3. Deck-lock rope

2. Tie the rope to the fixed-chassis component of the tow vehicle such as the ROPS tube (Figure 34).

   Important: **Do not tie the deck-lock rope to the seat, steering wheel, or the handle of a control.**

3. Remove the chocks from the mower tires.

During Operation

Note: Determine the left and right sides of the machine from the normal operating position.

During Operation Safety

- The owner/operator can prevent and is responsible for accidents that may cause personal injury or property damage.
- Wear appropriate clothing, including eye protection; long pants; substantial, slip-resistant footwear; and hearing protection. Tie back long hair and do not wear loose clothing or loose jewelry.
- Do not operate the machine while ill, tired, or under the influence of alcohol or drugs.
- Never carry passengers on the mower and keep bystanders and pets away from the machine during operation.
- Operate the machine only in good visibility to avoid holes or hidden hazards.
- Before you start the engine, ensure that all drives are in neutral, the PTO is disengaged, the parking brake is engaged, and you are in the operating position.
- Keep your hands and feet away from rotating parts. Keep clear of the discharge opening at all times.
- Look behind and down before backing up to be sure of a clear path.
- Use care when approaching blind corners, shrubs, trees, or other objects that may obscure your vision.
- Do not run the PTO with the decks raised above the partial up-stop position.
- Stop the mower whenever you are not cutting grass.
- Stop the machine, engage the parking brake, shut off the engine, remove the key, and wait for all moving parts to stop before inspecting the attachment after striking an object or if there is an abnormal vibration in the machine. Make all necessary repairs before resuming operation.
- Slow down and use caution when making turns and crossing roads and sidewalks with the machine. Always yield the right-of-way.
- Reduce speed on rough roads and surfaces
- The mower is heavy. When attached to a tow vehicle, and in the raised position, the weight of the mower affects stability, braking and steering. Exercise caution when transporting between working areas.
- Never leave a running machine unattended.
- Before leaving the operating position (including adjusting the height of cut) do the following:
  - Ensure that the PTO is disengaged.
  - Park the machine on a level surface.
  - Engage the parking brake.
  - Lower the mower decks.
  - Shut off the engine and remove the key.
  - Wait for all moving parts to stop before leaving the machine.
- Do not operate the machine when there is the risk of lightning.
- Use accessories, attachments, and replacement parts approved by The Toro® Company only.
- For disassembly or repair of all steel PTO driveshaft parts (tubes, bearings, joints, etc.), contact your authorized Toro distributor. Removal of components for repairs and reassembly may damage some parts if not performed with special tools by trained technicians.
- Do not operate the mower if the PTO or driveshaft guards are missing.
- Be careful when turning the machine so that the tow vehicle tires do not contact the PTO driveshaft.
- Secure hydraulic hoses, electrical wiring, ropes, and other items to keep them from contacting the PTO driveshaft guard.

Slope Safety

- Slopes are a major factor related to loss of control and rollover accidents, which can result in severe injury or death. You are responsible for safe slope operation. Operating the machine on any slope requires extra caution.
- Review and understand the slope instructions in the manual and on the tow vehicle.
- Evaluate the site conditions to determine if the slope is safe for machine operation, including surveying the site. Always use common sense and good judgment when performing this survey.
- Review the slope instructions listed below for operating the machine on slopes and to determine whether you can operate the machine in the conditions on that day and at that site. Changes in the terrain can result in a change in slope operation for the machine.
- Avoid starting, stopping, or turning the machine on slopes. Avoid making sudden changes in speed or direction. Make turns slowly and gradually.
- Do not operate a machine under any conditions where traction, steering, or stability are in question.
- Remove or mark obstructions such as ditches, holes, ruts, bumps, rocks, or other hidden hazards. Tall grass can hide obstructions. Uneven terrain could overturn the machine.
- Be aware that operating the machine on wet grass, across slopes, or downhill may cause the machine to lose traction. Loss of traction to the drive wheels may result in sliding and a loss of braking and steering.
- Use extreme caution when operating the machine near drop-offs, ditches, embankments, water hazards, or other hazards. The machine could suddenly roll over if a wheel goes over the edge or the edge caves in. Establish a safety area between the machine and any hazard.
- Identify hazards at the base of the slope. If there are hazards, mow the slope with a power walk-behind mower.
- If possible, keep the cutting unit(s) lowered to the ground while operating on slopes. Raising the cutting unit(s) while operating on slopes can cause the machine to become unstable.
- Use extreme caution with other attachments. These can change the stability of the machine and cause a loss of control. Always keep the machine in gear when going down slopes. Do not coast downhill (applicable only to gear-drive units).

Lowering the Mower Decks from the Transport Position

1. Ensure that the PTO is in the OFF position; refer to the *Operator's Manual* for your tow vehicle.
2. Move the mower to a flat area that is large enough to support the mower decks.
3. Ensure that there are no bystanders nearby.
4. Move the control for the rear attachment-circuit to the LIFT position; refer to the *Operator's Manual* for your tow vehicle.

   The mower decks may raise slightly and pressure on the deck locks reduces.
5. Pull and hold the deck-lock rope (Figure 35).

   The deck locks release.

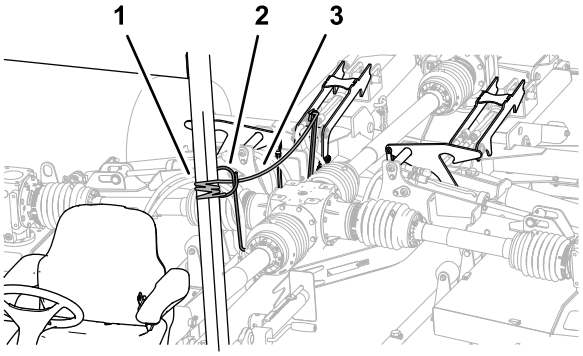

g250665

Figure 35

1. Deck-lock rope
2. Hose guide
3. Lock arm

6. Move the control for the rear attachment-circuit to the LOWER position; refer to the *Operator's Manual* for your tow vehicle.

   The mower decks lower to the ground (Figure 36).

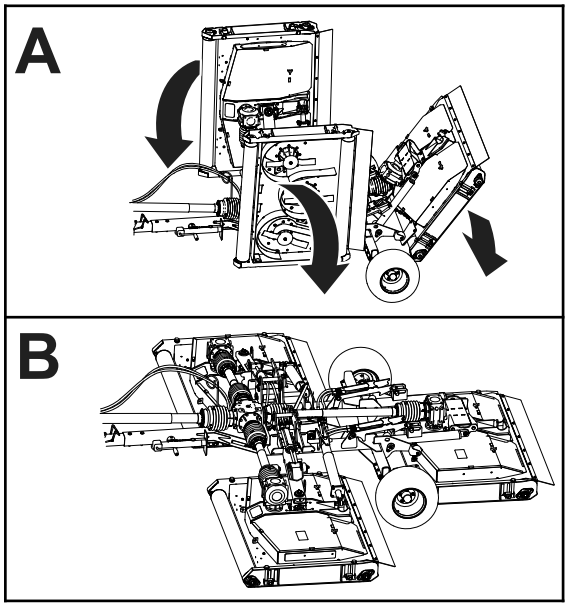

g337435

Figure 36

7. When the decks fully lower to the ground, release the rope and attachment control.
8. Move the control for the rear attachment-circuit to the FLOAT position; refer to the *Operator's Manual* for your tow vehicle.

Raising the Mower Decks while Cutting Grass

Use this procedure to raise the mower decks slightly when turning the machines around at the end of a cutting pass.

For instruction on using the rear attachment control, refer to the *Operator's Manual* for your tow vehicle.

1. Move the control for the rear attachment-circuit to the LIFT position.

   The decks raise, and the lift pins contact the partial up-stop portion of the deck locks.

   Note: Do not pull the deck-lock rope.

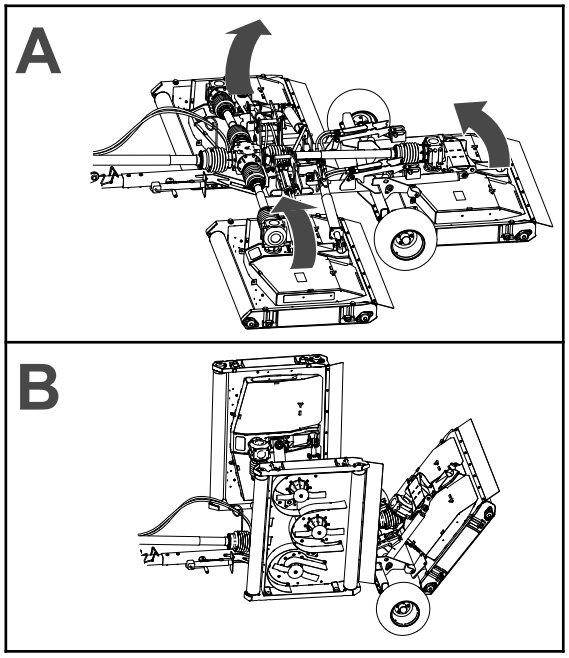

g337437

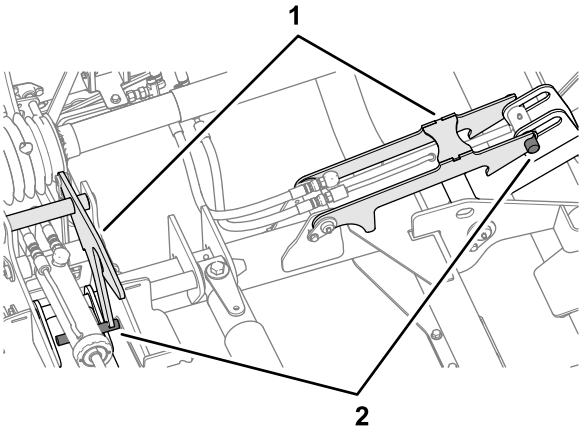

g250715

Figure 37

1. Deck locks
2. Deck pins

2. Turn the tow vehicle and align it for the next cutting pass.
3. Move the control for the rear attachment-circuit to the LOWER position.

Raising the Mower Decks to the Transport Position

For instruction on using the PTO and rear attachment control, refer to the *Operator's Manual* for your tow vehicle.

Note: If the rear-mower deck locks do not engage the deck pins adjust the height of the deck locks. Refer to Adjusting the Rear-Mower Deck Locks (page 43).

1. Move the mower to a flat area.
2. Shut off the PTO.
3. Pull and hold the deck-lock rope (Figure 38).

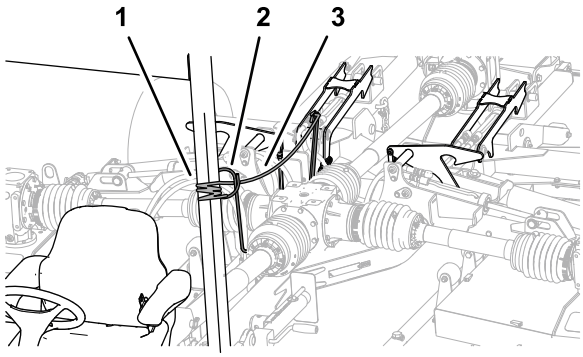

g250665

Figure 38

1. Deck-lock rope
2. Hose guide
3. Lock arm

4. Move the control for the rear attachment-circuit to the RAISE position.

   The mower decks raise to the TRANSPORT position (Figure 39).

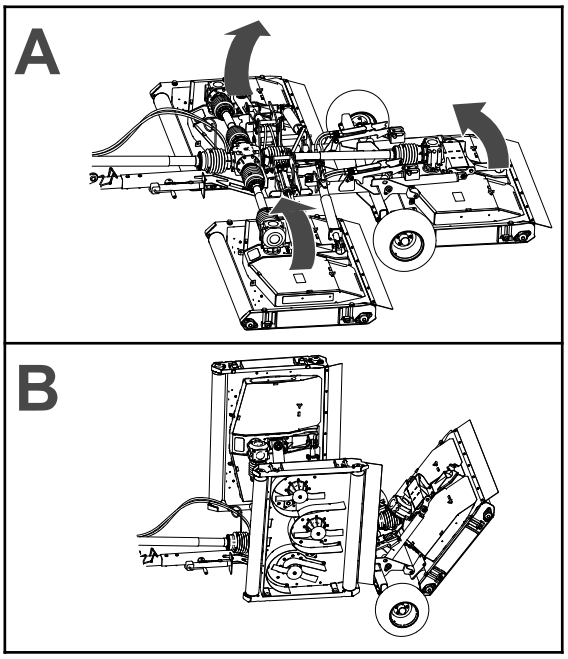

g337437

Figure 39

5. When the decks fully raised, release the rope and attachment control.

   The deck locks engage the deck pins (Figure 40).

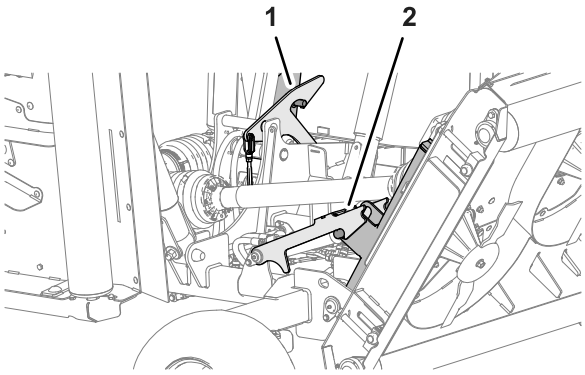

g337438

Figure 40

1. Right deck lock
2. Center deck lock

6. Move the control for the rear attachment-circuit to the LOWER position until the deck locks support the weight of the decks.

Adjusting the Height-of-Cut

1. If the mower is installed to the tow vehicle, perform the following:
   A. Ensure that the PTO is disengaged.
   B. If the mower decks are in the transport position, lower the decks; refer to Lowering the Mower Decks from the Transport Position (page 22).

C. Engage the parking brake, shut off the engine, remove the key, and wait for all moving parts to stop.

2. Determine the height that you want to cut the grass.

3. Loosen the 4 locknuts that secure the 4 height-of-cut adjusters (Figure 41) of the mower deck.

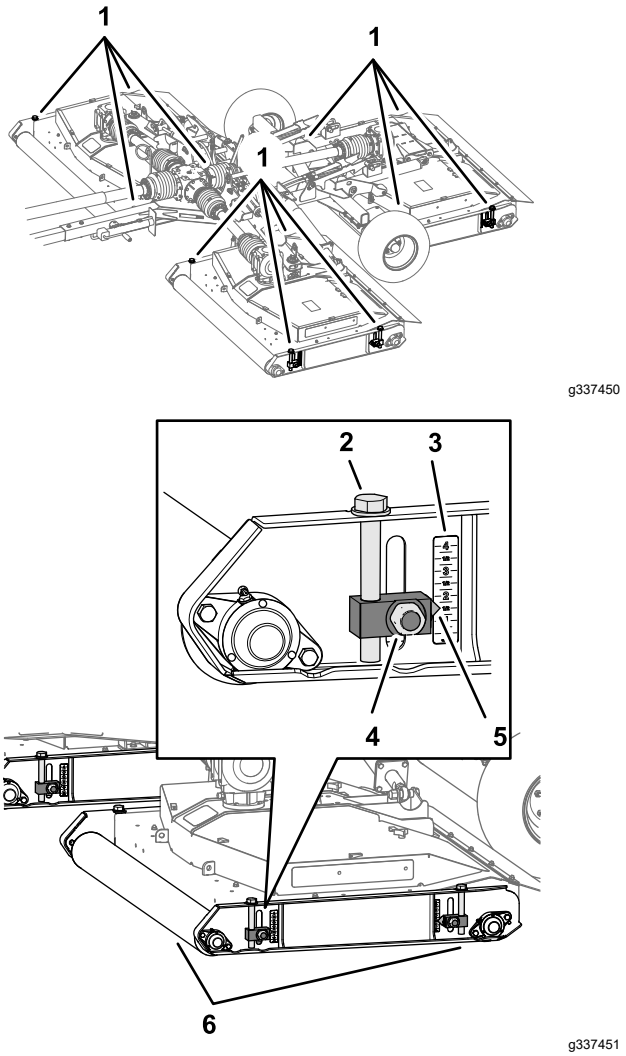

Figure 41

1. Height-of-cut adjusters
2. Adjuster capscrew
3. Cut-height scale
4. Locknut
5. Pointer
6. Rollers

4. Working at 1 of the deck rollers, turn the adjuster capscrew to raise or lower the mower until the pointer aligns with the grass cut height that you determined in step 2.

5. Tighten the locknuts for 2 height-of-cut adjusters.

6. Repeat steps 4 and 5 for the height-of-cut adjusters at the other roller.

7. Repeat steps 3 through 6 for the other decks.

Making a Sharp Turn

1. Shift the tow vehicle to LOW GEAR or LOW RANGE.

2. Driving the machine slowly, steer to make the sharp turn.

   Important: **Do not exceed the 75° maximum tow vehicle to mower angle.**

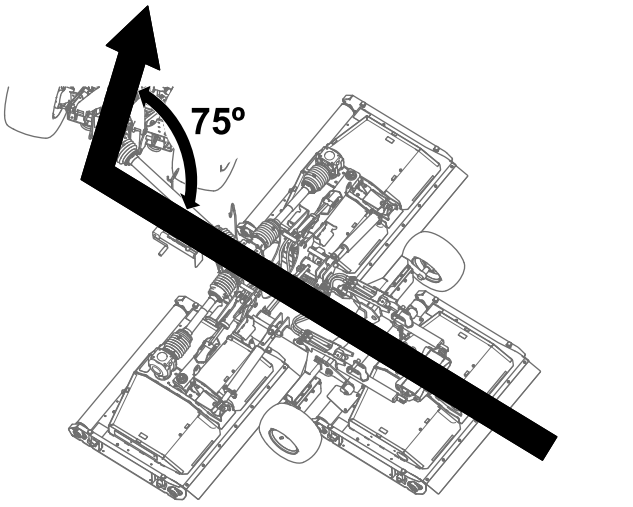

Figure 42

75° Maximum Tow Vehicle to Mower Angle

3. As you turn, check to ensure clearance between the tire of the tow vehicle and the parts of the mower (Figure 43).

   Note: If the tire is too close to the mower, turn more gradually.

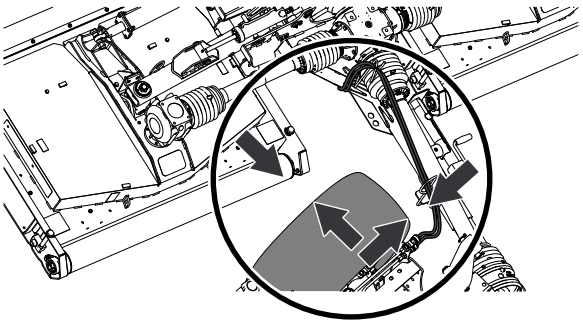

Figure 43

After Operation

After Operation Safety

- Park the machine on a level surface; engage the parking brake; shut off the engine; remove the key; and wait for all movement to stop before leaving the machine.
- Do not step on, over or under the driveshaft.
- Do not use the restrain chain of the PTO-shaft guard to support the shaft when transporting or storing the mower.
- Do not rest the PTO shaft on the ground.
- Do not allow the PTO-shaft guards to pull apart.
- Keep all parts of the machine in good working condition and all hardware tightened.
- Replace all worn, damaged, or missing decals.

Clean and Inspect

Service Interval: After each use

Raise the mower decks and thoroughly wash them.

Tie-Down Points

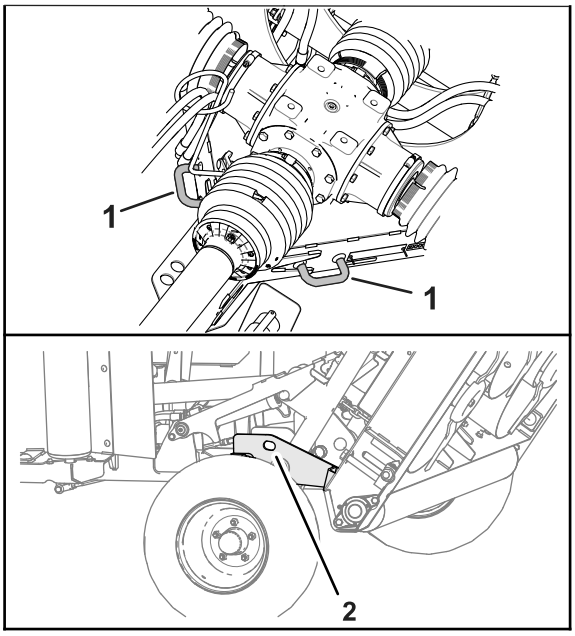

g337456

Figure 44

1. Forward tie-down point
2. Forward tie-down point (left and right sides)

Transporting the Machine

Important: **Raise and latch the decks before loading the mower on to or off from the trailer.**

- Use care when loading or unloading the machine into a trailer or a truck.
- Use full-width ramps for loading the machine into a trailer or a truck.

Refer to *Operator's Manual* for your tow chassis and tow vehicle the tie-down locations of the machine.

1. Drive the tow vehicle up the ramp.
2. Shut off the engine, remove the key, and engage the parking brake.
3. Lower the jack.
4. Tie down the machine near the wheels with straps, chains, or cables.

   Note: Refer to local regulations for tie-down requirements.
5. Secure blocks at the wheels of the machine to the bed of the trailer or truck.
6. Ensure that the PTO driveshaft is coupled to a tow vehicle or secured to the tow bar of the mower.

Maintenance

⚠ CAUTION

If you leave the key in the switch, someone could accidently start the engine and seriously injure you or other bystanders.

Remove the key from the switch before you perform any maintenance.

⚠ WARNING

If the mower decks are raised but not latched, the decks could lower unexpectedly and seriously injure you or other bystanders.

Fully raise all decks and ensure the pins on all lift arms engage the latches.

Recommended Maintenance Schedule(s)

Maintenance Service Interval	Maintenance Procedure
After the first 50 hours	• Change the center gear lubricant. • Change the center gear lubricant. • Check the mower belts.
Before each use or daily	• Check the tire air pressure. • Check the PTO and driveshaft guards. • Grease the constant velocity joint for the PTO driveshaft. • Check the mower blades.
After each use	• Clean and inspect the mower.
Every 50 hours	• Grease the telescoping driveshaft joints. • Grease the driveshaft U-joints. • Grease the driveshaft guard-slip joints. • Grease the lift arms, hydraulic cylinders, latches, and impact struts (also, lubricate the mower immediately after every washing). • Grease the spindles. • Grease the belt tensioner. • Grease the deck rollers (also, lubricate the rollers immediately after every washing). • Check the gearbox fluid level.
Every 500 hours	• Inspect gearbox and spindle bearings.
Before storage	• Perform all 50-hour maintenance procedures. • Remove all debris. • Inspect the roller bearings. • Paint any chipped surfaces.
Yearly	• Change the center gear lubricant. • Change the center gear lubricant. • Inspect the PTO-shaft splines for signs of wear. • Inspect the tow bar for signs of wear.

Lifting the Mower

1. Lift the mower at the axle halves as shown in Figure 45.

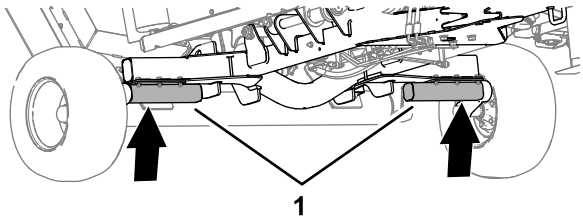

g264176

Figure 45

1. Axle halves

2. Use jack stands to support the mower.

Accessing the Mower Decks

Removing the Deck Covers

1. Release the 3 latches that secure the cover of the mower deck (Figure 46).

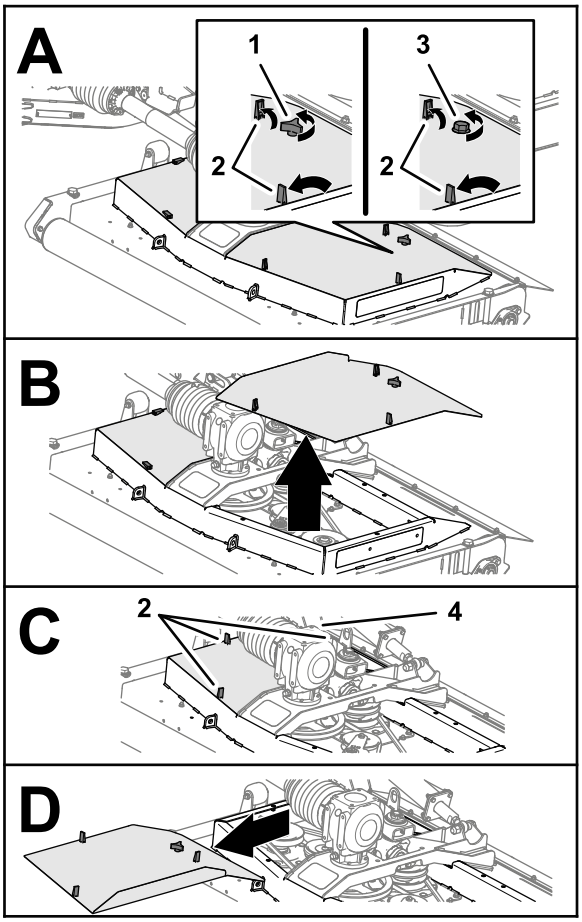

g251061

Figure 46

1. Knob (deck cover—non-CE mowers)
2. Latch (mower-deck cover)
3. Bolt (deck cover—CE mowers)
4. Knob (non-CE mowers) or bolt (CE mowers)

2. Loosen the knob or bolt (CE mower deck) that secures the cover of the mower deck to the mower deck (Figure 46).
3. Lift and remove the cover from the deck.
4. Repeat steps 1 and 2 for the other cover (Figure 46).

Installing the Deck Covers

1. Align the latches of the mower-deck cover with the holes in the mower deck (Figure 47).

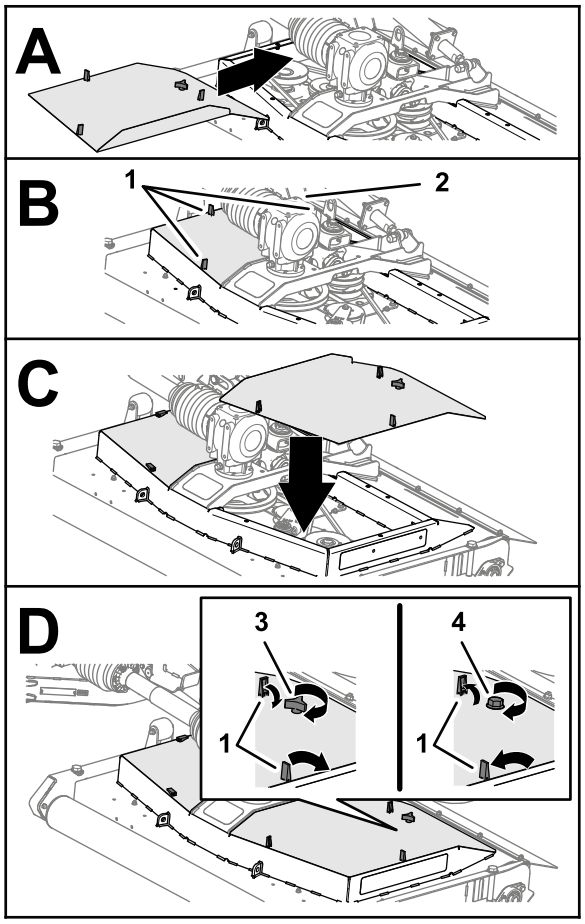

g254821

Figure 47

1. Latch (mower-deck cover)
2. Knob (non-CE mowers) or bolt (CE mowers)
3. Knob (deck cover—non-CE mowers)
4. Bolt (deck cover—CE mowers)

2. Assemble the deck cover to the mower deck (Figure 47).
3. Secure the cover (Figure 47) as follows:
   - **Non-CE mowers:** thread the knob through the cover and into the mower deck, and tighten the knob.
   - **CE mowers:** thread the bolt into the mower deck, and tighten the bolt.
4. Secure the 3 latches of the cover to the mower deck (Figure 47).
5. Repeat steps 1 through 4 for the other covers that you removed (Figure 47).

Lubrication

Grease Specification

No. 2 lithium base grease

Greasing the PTO Shaft Constant Velocity Joint

Service Interval: Before each use or daily

Apply the specified grease to the 3 grease fittings at the forward end of the PTO driveshaft (Figure 48).

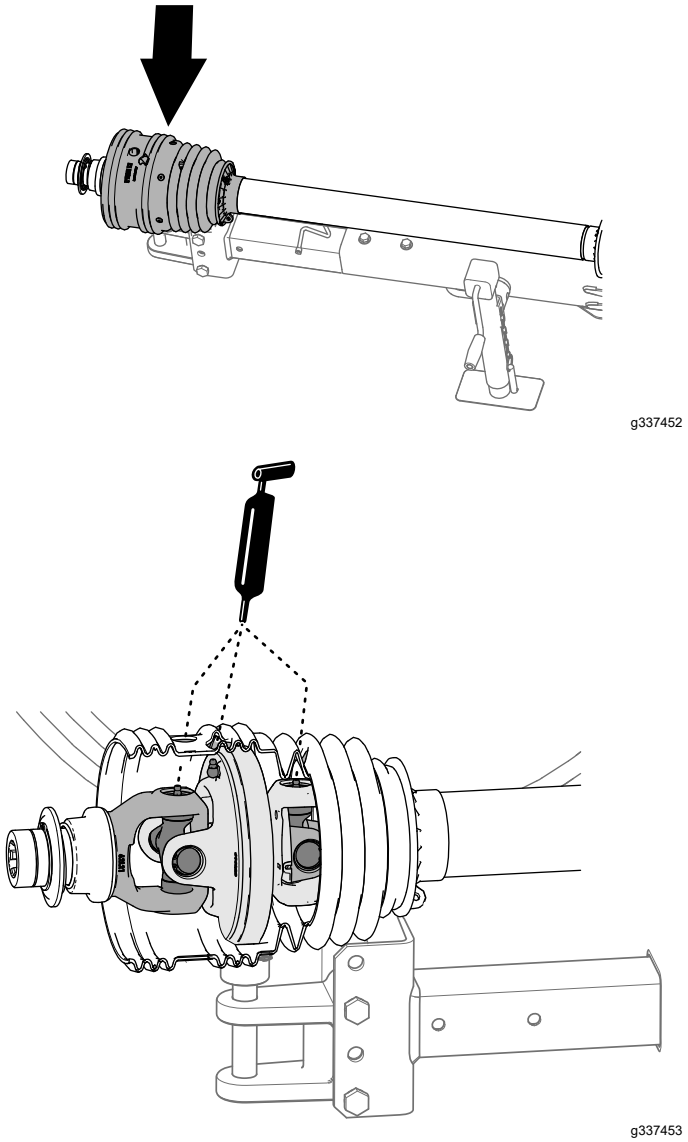

g337452

g337453

Figure 48

Greasing the Telescoping Driveshaft Joints

Service Interval: Every 50 hours

1. Partially extend the PTO driveshaft to access the grease fitting near the middle of the inboard driveshaft guard (Figure 49).

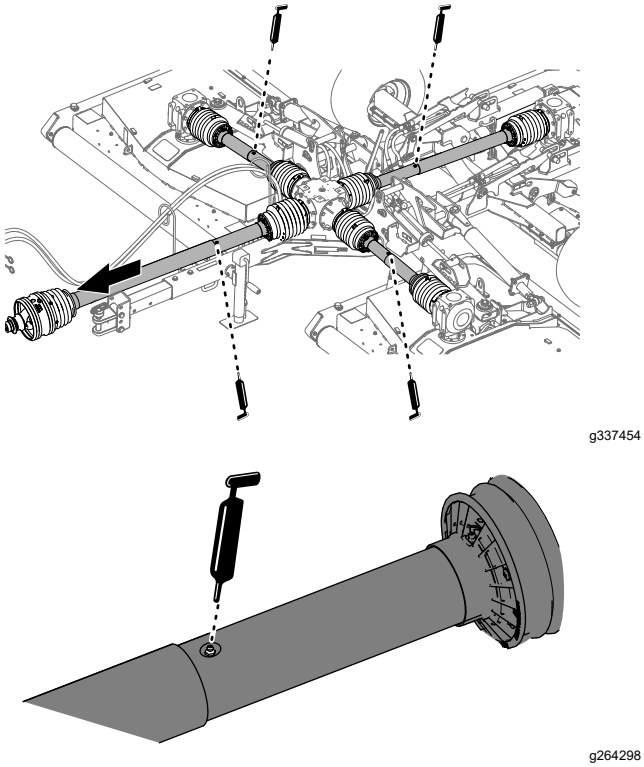

Figure 49

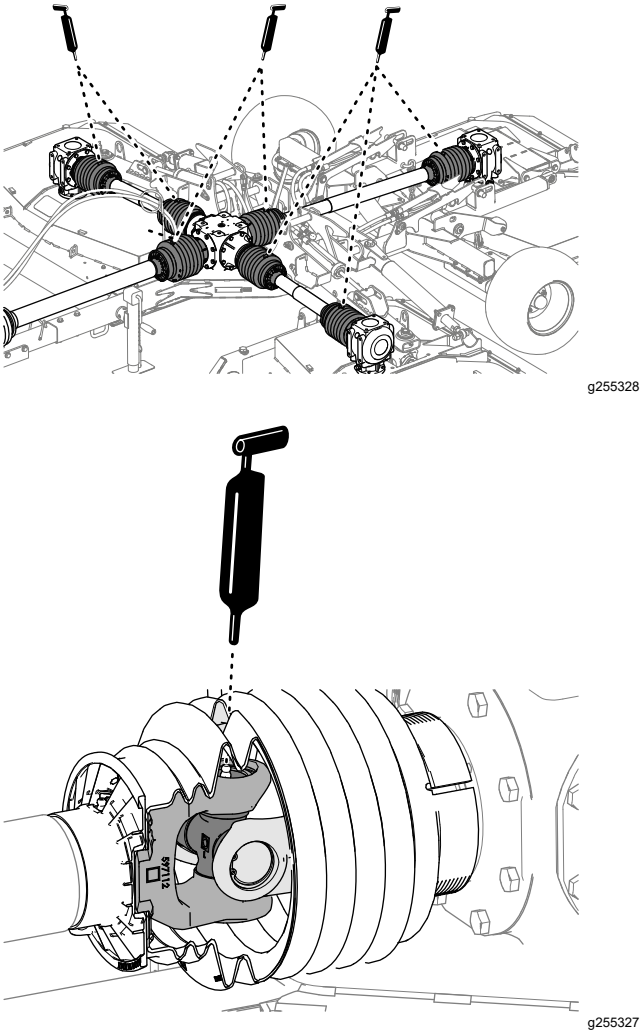

Figure 50

2. Apply grease to the 4 grease fittings for the telescoping driveshaft joints as shown in Figure 49.

Greasing the Driveshaft U-Joints

Service Interval: Every 50 hours

Apply the specified grease to the 7 fitting for the driveshaft U-joints as shown in Figure 50.

Greasing the Driveshaft Guard-Slip Joints

Service Interval: Every 50 hours

Apply the specified grease to the 6 grease fittings for the driveshaft guard-slip joints as shown in Figure 51.

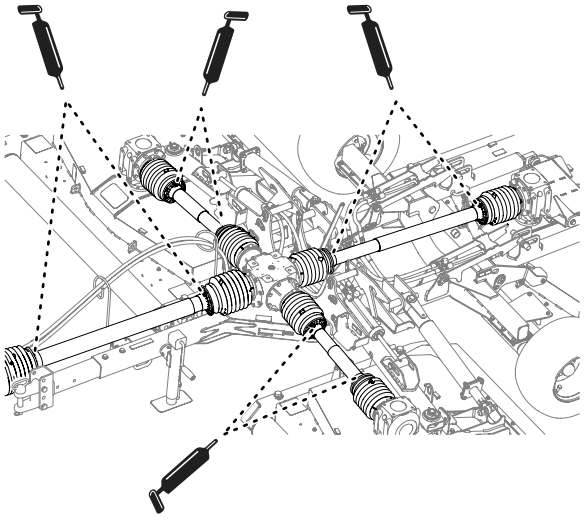

g337445

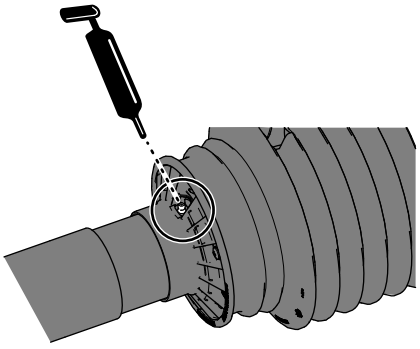

g264213

Figure 51

Greasing the Lift Arms, Hydraulic Cylinders, Latches, and Impact Struts

Service Interval: Every 50 hours (also, lubricate the mower immediately after every washing).

- Apply the specified grease to the lift arms, hydraulic cylinders, and impact struts of the left and right mower decks (Figure 52).

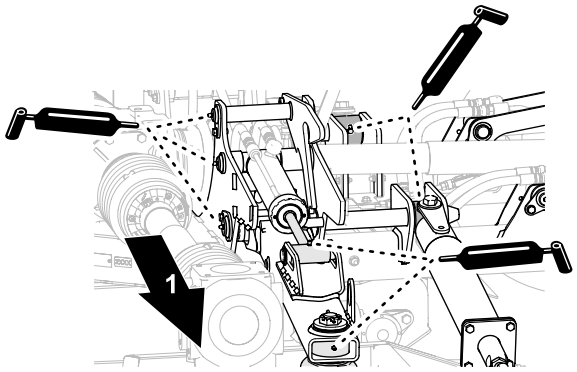

g337447

Figure 52

Left or Right Mower Deck

1. Outboard

- Apply grease the lift arms and hydraulic cylinders, and impact struts of the center mower deck (Figure 53).

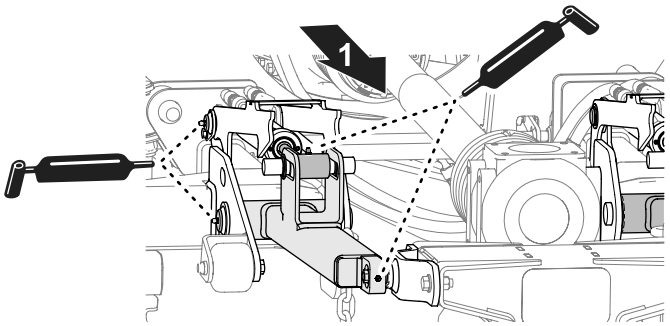

g302979

Figure 53

Center Mower Deck

1. Back of the mower

Greasing the Spindles

Service Interval: Every 50 hours

Apply the specified grease to the grease fitting at the 3 spindles at each mower deck (Figure 53).

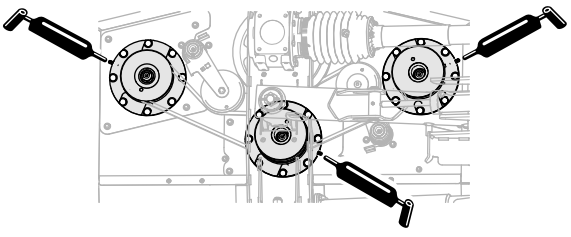

g251062

Figure 54

Left deck shown. Right and center decks are similar.

Greasing the Belt Tensioners

Service Interval: Every 50 hours

Apply the specified grease to the grease fittings at the 2 belt tensioners of each mower deck.

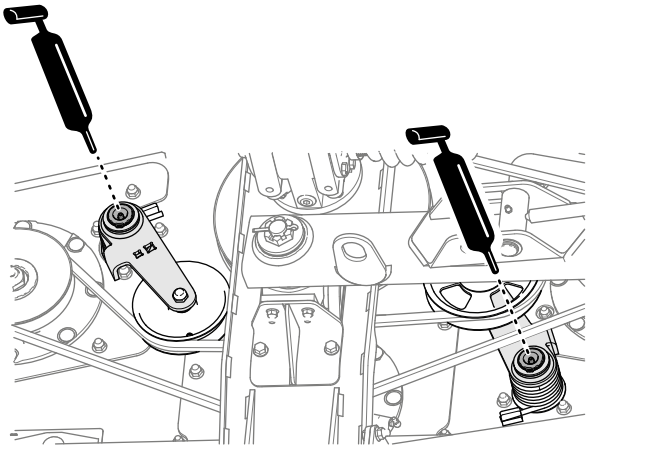

g264169

Figure 55

Greasing the Deck Rollers

Service Interval: Every 50 hours (also, lubricate the rollers immediately after every washing).

1. Apply the specified grease the deck roller bearings at the left side of the deck (Figure 56).

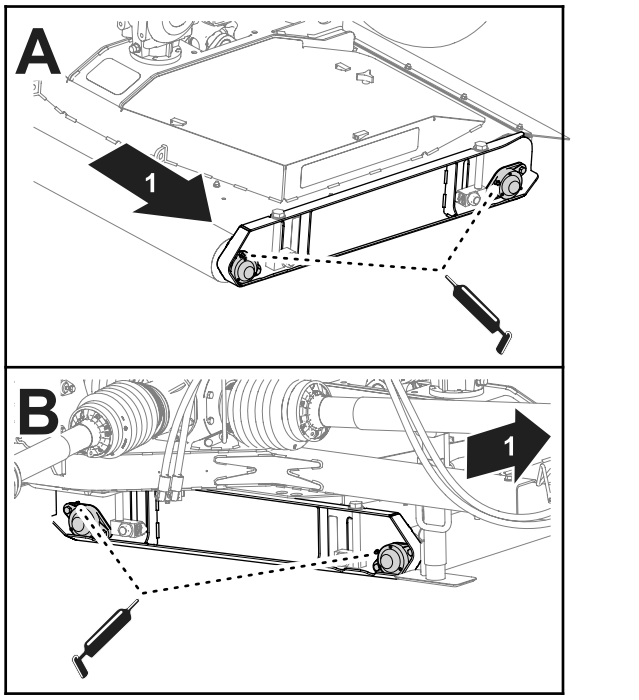

g337446

Figure 56

1. Left side of the machine

2. Grease the deck roller bearings at the right side of the deck (Figure 56).
3. Repeat steps 1 and 2 for the deck rollers at the other decks.

Servicing the Gearboxes

Customer supplied material: PTFE thread sealant and a small hand pump.

Gearbox Fluid Specification

- Toro Premium Tractor fluid
- Mobilfluid™ 424 tractor hydraulic fluid

Checking the Gearbox Fluid Level

Service Interval: Every 50 hours

1. Remove the dipstick from the dipstick port at the top of the center gearbox (Figure 57 or Figure 58).

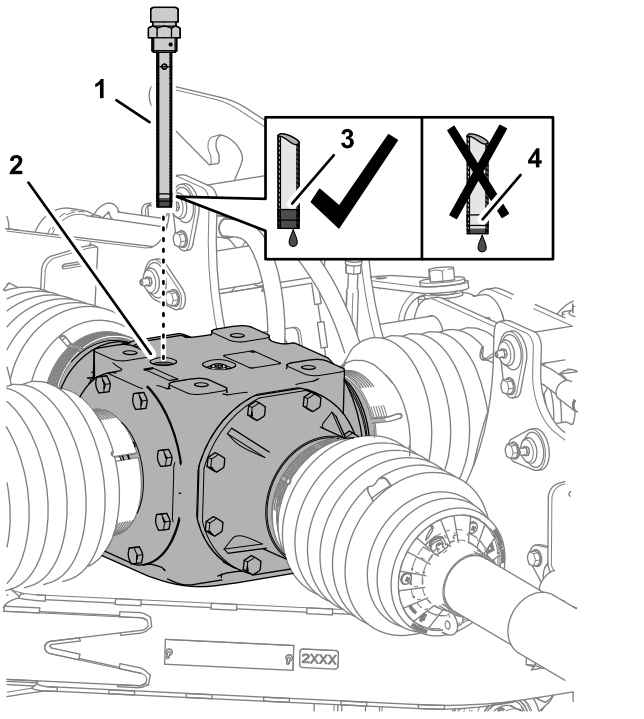

g255251

Figure 57
Center Gearbox

1. Dipstick
2. Dipstick port
3. Full dipstick mark
4. Add dipstick mark

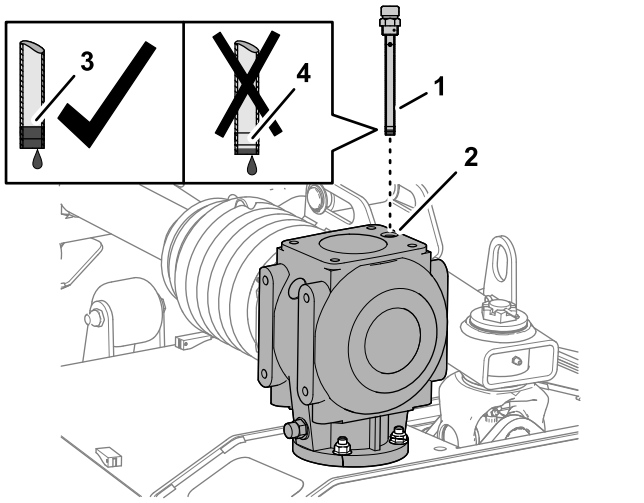

Figure 58
Deck Gearbox

1. Dipstick
2. Dipstick port
3. Full dipstick mark
4. Add dipstick mark

2. Check the fluid level indicated on the dipstick (Figure 57 or Figure 58).

   The fluid level should indicate between the full and add marks of the dipstick.

   Note: Add lubricant as needed to raise the level between the full and add marks; refer to Filling the Deck Gearbox (page 34) or Filling the Center Gearbox (page 34).

3. Clean the threads of the dipstick and fill plug and apply PTFE thread sealant to the threads.
4. Thread the dipstick into the fill port and tighten the dipstick (Figure 57 or Figure 58).
5. Repeat steps 1 through 4 for the deck gearboxes.

Changing the Center Gear Box Lubricant

Service Interval: After the first 50 hours

Yearly

Draining the Center Gearbox

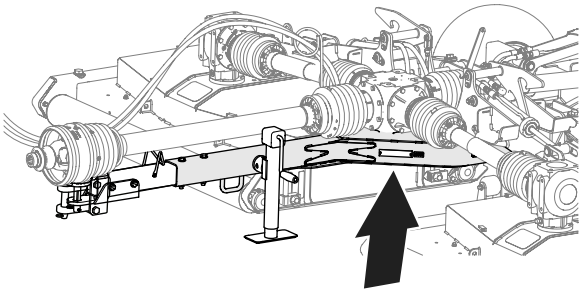

Figure 59
Center Gearbox Drain Location

1. Working through the access hole at the bottom-frame plate of the mower, align a drain pan under the hole (Figure 60).

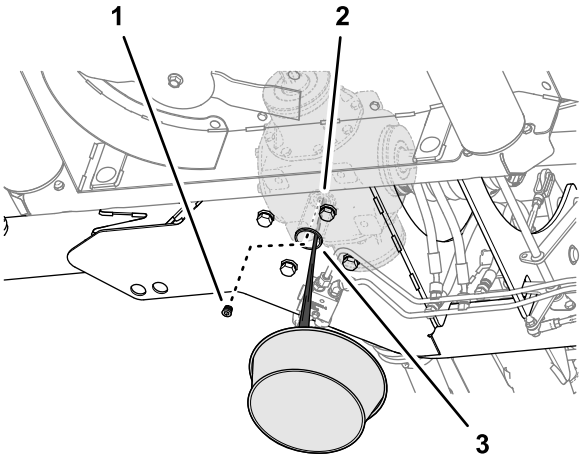

Figure 60

1. Socket-drain plug
2. Drain port (center grearbox)
3. Access hole (bottom-frame plate—mower)

2. Remove the socket-drain plug from the drain port of the center gearbox and allow the lubricant to drain completely (Figure 60).
3. Clean the threads of the drain plug and apply PTFE thread sealant to the threads.
4. Assemble the drain plug into the drain port and tighten the plug.

Filling the Center Gearbox

Center gearbox fluid capacity: 2.48 L (84 fl oz)

1. Remove the dipstick from the dipstick port at the top of the center gearbox and wipe clean the dipstick (Figure 61).

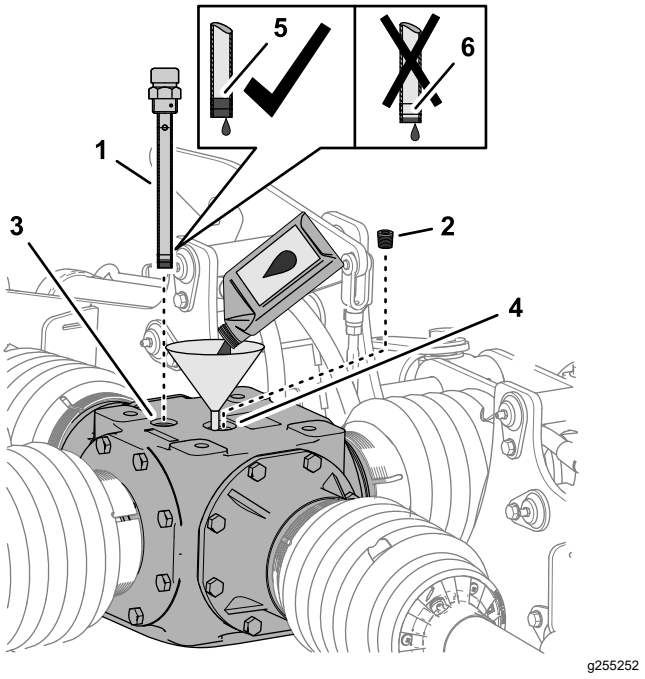

Figure 61
Center Gearbox

1. Dipstick
2. Fill plug
3. Dipstick port
4. Fill port
5. Full dipstick mark
6. Add dipstick mark

2. Remove the fill plug from the fill port at the top of the gearbox (Figure 61).
3. Add 2.48 L (84 fl oz) of the specified gear lubricant to the gearbox through the fill port (Figure 61).
4. Thread the dipstick into the port, remove the dipstick, and check that the lubricant level (Figure 61).

   The fluid level should indicate between the full and add marks of the dipstick.

   Note: Add lubricant as needed to raise the level between the full and add marks.
5. Clean the threads of the dipstick and fill plug and apply PTFE thread sealant to the threads.
6. Thread the dipstick into the fill port and tighten the dipstick (Figure 61).
7. Assemble the fill plug into the fill port and tighten the plug (Figure 61).

Changing the Deck Gearbox Lubricant

Service Interval: After the first 50 hours

Yearly

Emptying the Deck Gearbox

1. Remove the dipstick from the top of the gearbox (Figure 62).

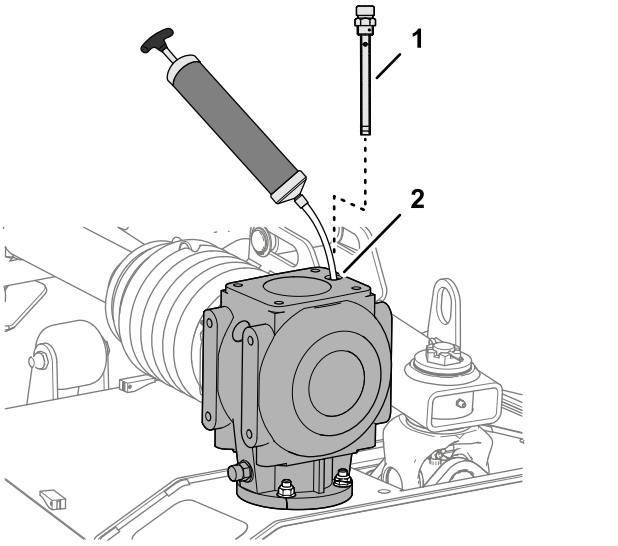

Figure 62

1. Dipstick
2. Dipstick port

2. Through the dipstick port, use a suction pump to remove the fluid from the gearbox (Figure 62).
3. Repeat steps 1 and 2 for the other deck gearboxes.

Filling the Deck Gearbox

Deck gearbox fluid capacity: 1.06 L (36 fl oz)

1. Add 1.06 L (36 fl oz) of the specified gear lubricant to the gearbox through the dipstick port (Figure 63).

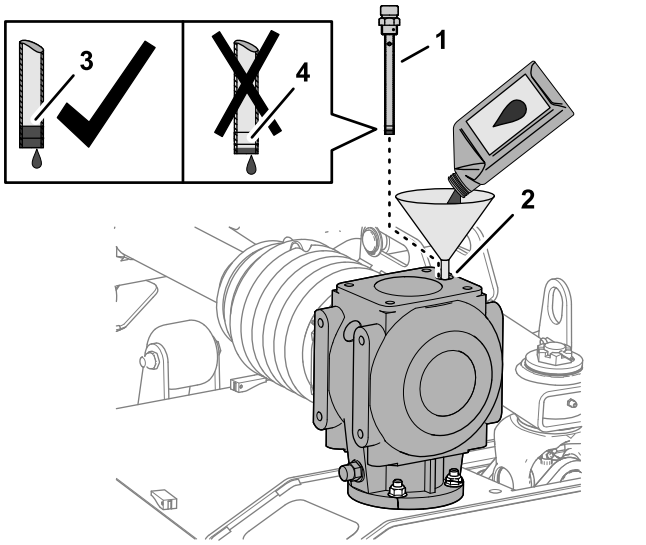

g255294

Figure 63

1. Dipstick
2. Dipstick port
3. Full dipstick mark
4. Add dipstick mark

2. Thread the dipstick into the port, remove the dipstick, and check that the lubricant level (Figure 63).

   The fluid level should indicate between the full and add marks of the dipstick.

   Note: Add lubricant as needed to raise the level between the full and add marks.
3. Clean the threads of the dipstick and apply PTFE thread sealant to the threads.
4. Thread the dipstick into the fill port and tighten the dipstick (Figure 63).
5. Repeat steps and1 through 4 for the other deck gearboxes.

Checking the Mower Belts

Service Interval: After the first 50 hours

The blade drive belts, tensioned by the spring loaded idler pulleys, are durable. However, after many hours of use, the belts will show signs of wear. Signs of a worn belt include: squealing when belt is rotating, the mower blades slip when cutting grass, the belt has frayed edges, the belt has burn marks and cracks, and poor quality of cut. Replace the belts if you notice any of these conditions.

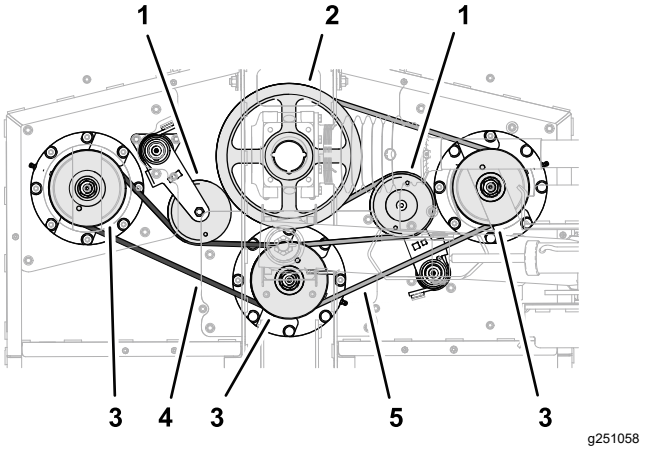

g251058

Figure 64

The belts for the left deck are shown. The belts right and center decks are similar.

1. Tensioner pulleys
2. Drive pulleys
3. Spindle pulleys (left, center, and right)
4. Short belt (left)
5. Long belt (right)

1. Remove the deck covers; refer to Removing the Deck Covers (page 28).
2. Check the short and long belt for signs of damage or excessive wear.

   Replace damaged or worn belts; refer to Replacing the Mower Belts (page 35).
3. Install the deck covers; refer to Installing the Deck Covers (page 29).

Replacing the Mower Belts

Note: You must remove the long belt to replace the short belt.

Removing the Long Belt

1. Remove the belt covers; refer to Removing the Deck Covers (page 28)
2. Use a breaker bar or similar tool to rotate the belt tensioner for the long belt counterclockwise and slip the belt off the tensioner pulley (Figure 65).

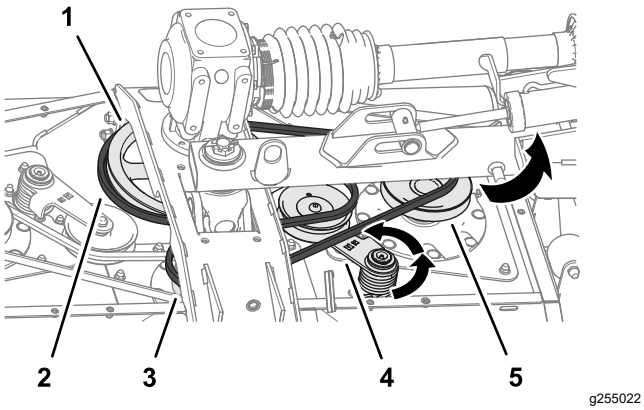

Figure 65

1. Drive pulley
2. Long belt
3. Center-spindle pulley
4. Tensioner and pulley
5. Right-spindle pulley

3. Slip the long belt off the drive pulley, center-spindle pulley, and right-spindle pulley (Figure 65).
4. Remove the belt from the mower.

   Note: You may need to rotate the belt while removing it from the center-spindle pulley.

Removing the Short Belt

1. Remove the belt covers; refer to Removing the Deck Covers (page 28).
2. If installed, remove the long belt; refer to Removing the Long Belt (page 35).
3. Use a breaker bar or similar tool to rotate the belt tensioner for the short belt counterclockwise and slip the belt off the tensioner pulley (Figure 66).

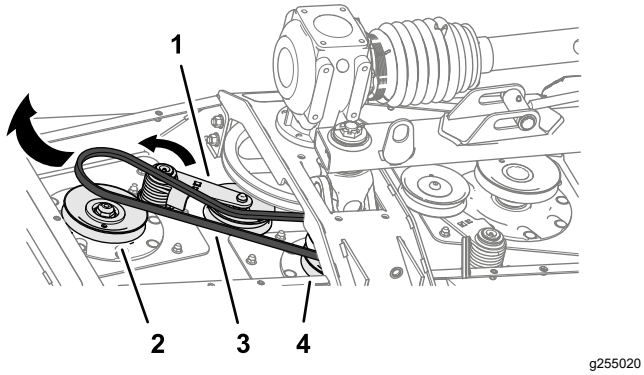

Figure 66

1. Tensioner and pulley
2. Left-spindle pulley
3. Short belt
4. Center-spindle pulley

4. Slip the short belt off the drive pulley, center-spindle pulley, and right-spindle pulley
5. Remove the belt from the mower.

   Note: You may need to rotate the belt while removing it from the center-spindle pulley.

Installing the Short Belt

1. Route the short belt around the left-spindle pulley and the lower groove of the center-spindle pulley (Figure 67).

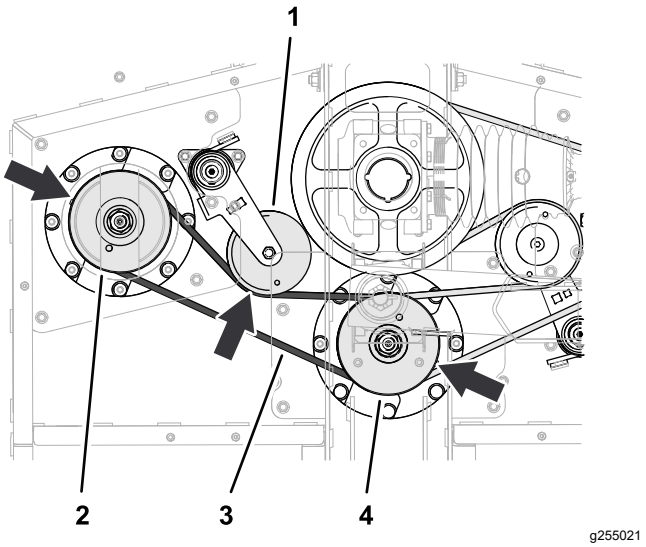

Figure 67

1. Tensioner and pulley
2. Left-spindle pulley
3. Short belt
4. Center-spindle pulley

2. Use a breaker bar or similar tool to rotate the belt tensioner counterclockwise and slip the belt over the tensioner pulley (Figure 67).

Installing the Long Belt

1. Route the long belt around the drive pulley, upper groove of the center-spindle pulley, and right-spindle pulley (Figure 68).

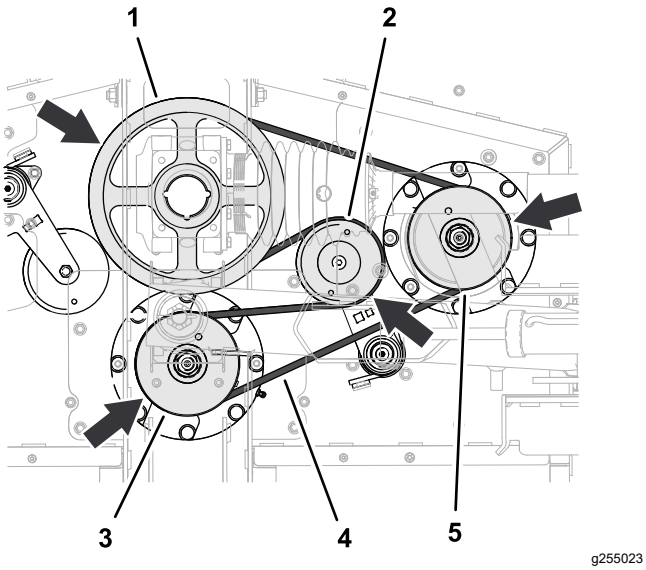

Figure 68

1. Drive pulley
2. Tensioner and pulley
3. Center-spindle pulley
4. Long belt
5. Right-spindle pulley

2. Use a breaker bar or similar tool to rotate the belt tensioner counterclockwise and slip the belt over the tensioner pulley (Figure 68).
3. Install the deck covers; refer to Installing the Deck Covers (page 29).

Servicing the Blades

Maintain sharp blades throughout the cutting season because sharp blades cut cleanly without tearing or shredding the grass blades. Tearing and shredding turns grass brown at the edges, which slows growth and increases the chance of disease.

Check the blades daily for sharpness, and for any wear or damage. Sharpen the blades as necessary. If a blade is damaged or worn, replace it immediately with a genuine Toro replacement blade.

⚠ DANGER

The mower blades are sharp and can injure you.

Wear heavy leather or cut resistant gloves when servicing with the blades.

⚠ DANGER

A worn or damaged blade can break, and a piece of the blade could be thrown toward you or a bystander, resulting in serious personal injury or death.

- **Inspect the blade periodically for wear or damage.**
- **Replace a worn or damaged blade.**

Preparing to Service the Mower Blades

Note: You need the mower installed to the tow vehicle when servicing the mower blades.

1. Disengage the PTO, move the machine to a level surface, and engage the parking brake.
2. Raise and latch the mower decks, shut off the engine, and remove the key (Figure 69).

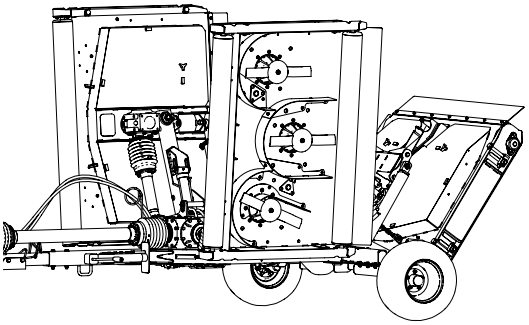

Figure 69

Checking for Bent Mower Blades

1. Align the mower blade as shown in Figure 70.

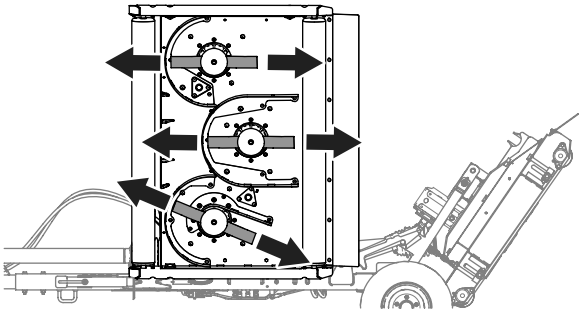

Figure 70

2. Clean the bottom of the mower deck at the area adjacent to the cutting edge at the rear of the blade (Figure 71).

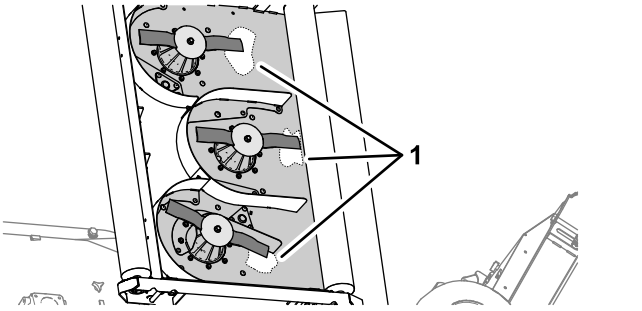

Figure 71

1. Clean area (bottom of the mower deck)

3. Use a combination square to measure the distance between the clean area of the deck and the tip of the cutting edge (Figure 72).

   Record your measurement _____.

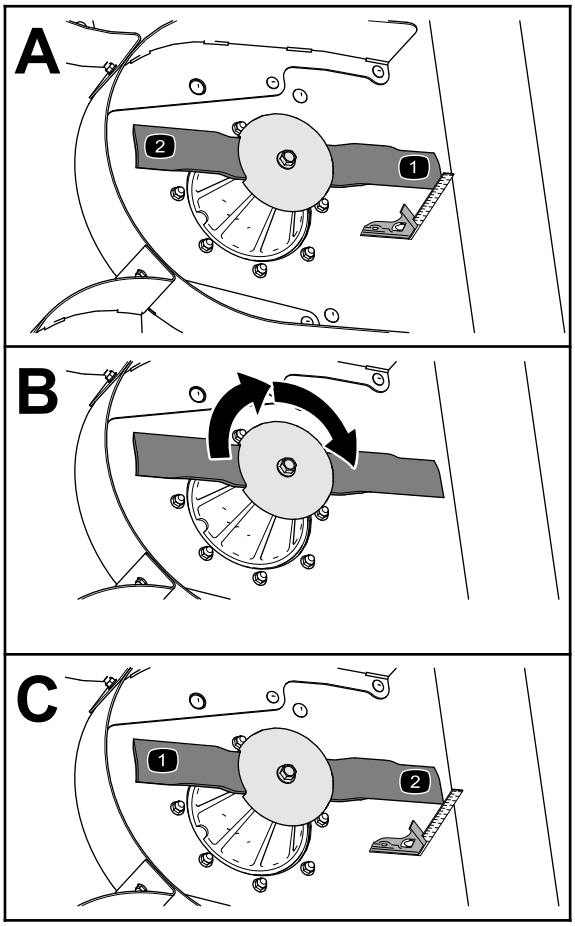

Figure 72

4. Rotate the blade 180° (Figure 72).
5. Measure the distance between the clean area on the deck and the tip of the cutting edge (Figure 72).

   Record your measurement _____.

   The difference between measurements that you observed in steps 4 and 6 exceed 3 mm (1/8 inch), the blade is bent, and you must replace the it; refer to Removing the Blades (page 39) and Installing the Blades (page 40)

6. Repeat steps 3 through 5 for the other blades of the mower deck or steps 1 through 6 for the other decks.

Inspecting the Blades

Service Interval: Before each use or daily

1. Inspect the cutting edges (Figure 73). If the edges are not sharp or have nicks, remove and sharpen the blades. Refer to Sharpening the Blades (page 39).
2. Inspect the blades, especially the sail area (Figure 73). If you notice any damage, wear, or a slot forming in this area (Figure 73), immediately install a new blade.

⚠ DANGER

If you allow the blade to wear, a slot will form between the sail and flat part of the blade. Eventually a piece of the blade may break off and be thrown from under the housing, possibly resulting in serious injury or death to you or bystanders.

- **Inspect the blade periodically for wear or damage.**
- **Never try to straighten a blade that is bent or weld a broken or cracked blade.**
- **Replace a worn or damaged blade.**

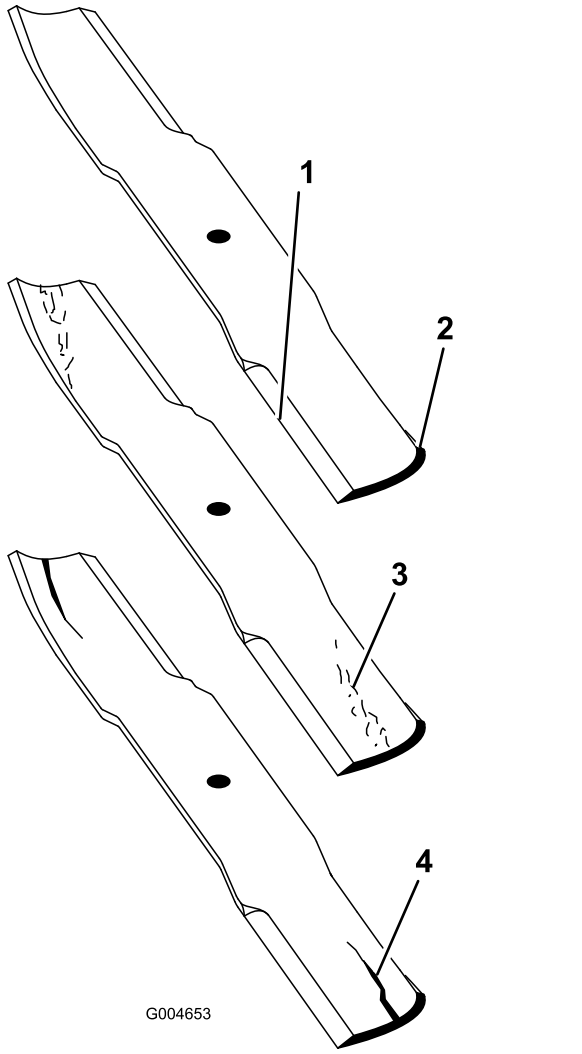

Figure 73

1. Cutting edge
2. Sail area
3. Wear/slot forming
4. Crack

Removing the Blades

Blades must be replaced if a solid object is hit, if the blade is out of balance or is bent. To ensure optimum performance and continued safety conformance of the machine, use genuine Toro replacement blades. Replacement blades made by other manufacturers may result in non-conformance with safety standards.

⚠ WARNING

Contact with a sharp blade can cause serious injury.

Wear gloves or wrap sharp edges of the blade with a rag.

1. Hold the blade end using a rag or thickly-padded glove.
2. Rotate the blade bolt clockwise to remove the bolt (Figure 74).

   Important: **The blade bolts have left-hand threads**

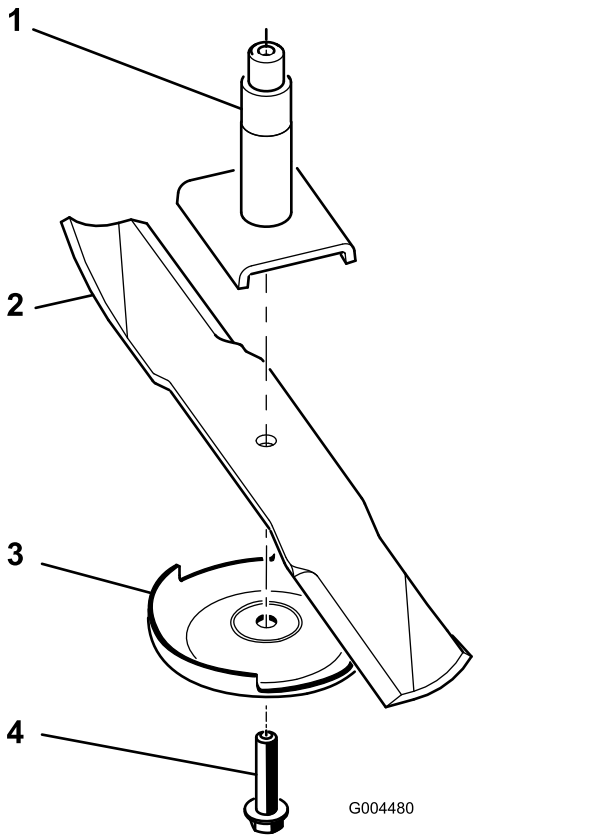

Figure 74

1. Spindle
2. Sail area of blade
3. Anti-scalp plate
4. Blade bolt

3. Remove the anti-scalp plate and blade from the spindle shaft (Figure 74).

Sharpening the Blades

⚠ WARNING

When sharpening blade, pieces of blade could be thrown and cause serious injury.

Wear proper eye protection when sharpening blades.

1. Sharpen the cutting edge at both ends of the blade (Figure 75).

   Note: Maintain the original angle. The blade retains its balance if the same amount of material is removed from both cutting edges.

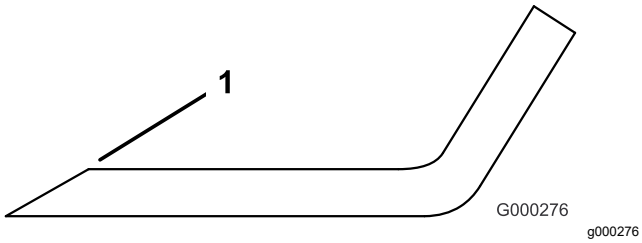

Figure 75

1. Sharpen at original angle

2. Check the balance of the blade by putting it on a blade balancer (Figure 76).

   Note: If the blade stays in a horizontal position, the blade is balanced and can be used. If the blade is not balanced, file some metal off the end of the sail area only (Figure 77). Repeat this procedure until the blade is balanced.

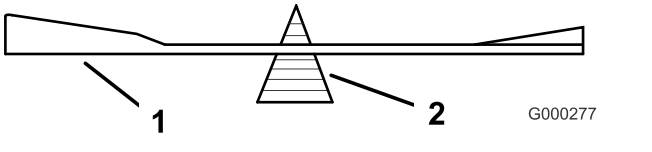

Figure 76

1. Blade
2. Balancer

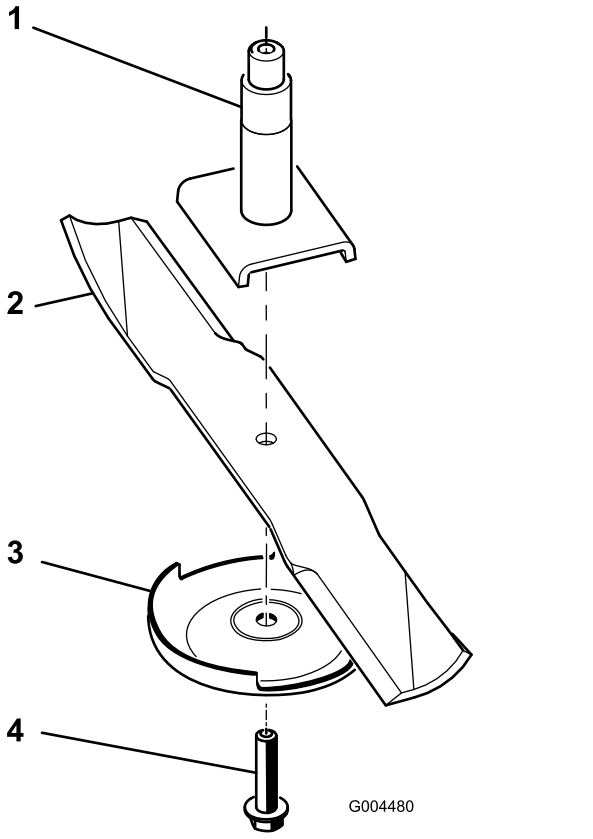

Figure 77

1. Spindle
2. Sail area of blade
3. Anti-scalp plate
4. Blade bolt

Installing the Blades

1. Install the blade onto the spindle shaft (Figure 77).

   Important: **The curved part of the blade must be pointing upward toward the inside of the mower to ensure proper cutting.**

2. Install the anti-scalp plate and blade bolt (Figure 77).

   Important: **The blade bolts have left-hand threads.**

3. Torque the blade bolt to 115 to 150 N·m (85 to 110 ft-lb).

Adjusting the Mower Pitch

The factory presets the pitch of the mower deck so that back of the deck is higher than the front.

Preparing the Adjust Mower Pitch

Customer provided material: a wood block 51 mm (2 inch)

1. For each mower deck that you are adjusting mower pitch, align the center mower blade shown in Figure 78.

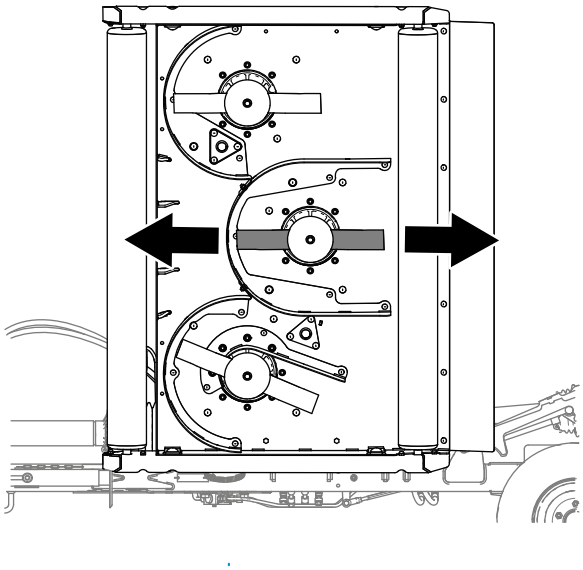

g255552

Figure 78

2. Lower the mower decks to the ground.

Leveling the Deck

1. Loosen the nut that secures the height-of-cut adjuster block (Figure 79).

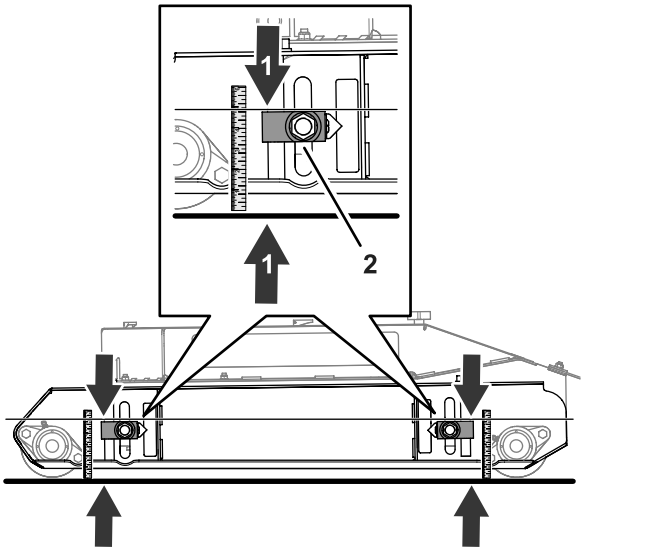

g337448

Figure 79

1. 4-7/8 inch measurement
2. Height-of-cut adjuster

2. Move the height-of-cut adjuster up or down until you measure 124 mm (4-7/8 inches) from the top of adjuster block to the ground (Figure 79).
3. Repeat steps 1 and 2 at the other height-of-cut adjusters.

Setting the Deck Pitch

Customer provided material: wood spacer block 51 mm (2 inches)

1. Working at the back of the mower deck, lift the rear flap and align the wood block 51 mm (2 inches) between the rear end of the center mower blade and the ground (Figure 80).

   You should feel slight drag as you slip the block between the blade and the ground.

   - If there is too much clearance between the blade and the ground, use the 4 height-of-cut adjusters to lower the deck.
   - If you cannot slip the wood block between the blade and the ground, use the 4 height-of-cut adjusters to raise the deck.

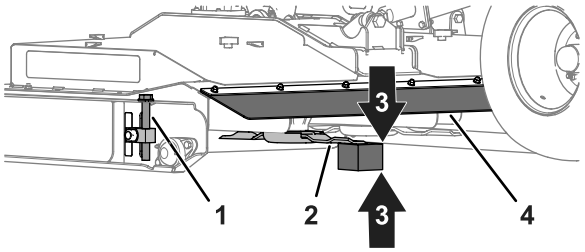

g337442

Figure 80

1. Height-of-cut adjuster
2. Center mower blade
3. Wood spacer block 51 mm (2 inches)
4. Rear flap

2. Measure the distance between top of adjuster block to the ground (Figure 81).

   Rotate the height-of-cut adjuster until you achieve the following results:

   - The height-of-cut block to the ground measurement the same at all 4 locations.
   - The wood block is a slip fit between the center mower blade and the ground.

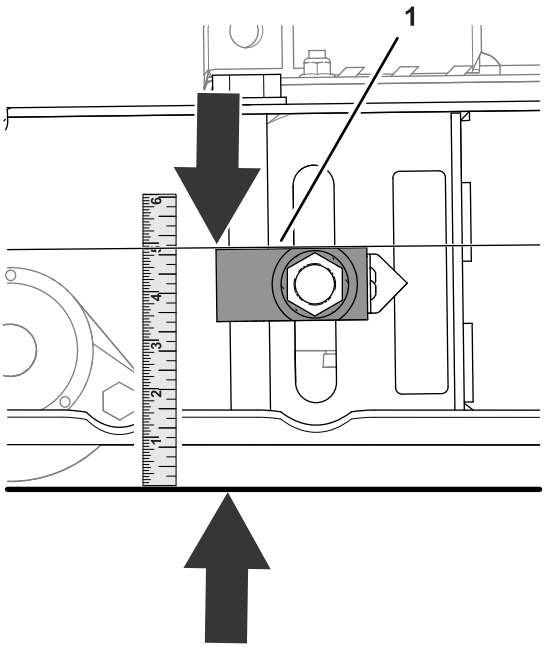

g337457

Figure 81

1. Top of the height-of-cut adjuster

3. Loosen the 2 socket-head screws that secure the pointer to the height-of-cut adjuster block, align the pointer to the 51 mm (2 inches) mark on the decal, and tighten the screws (Figure 82).

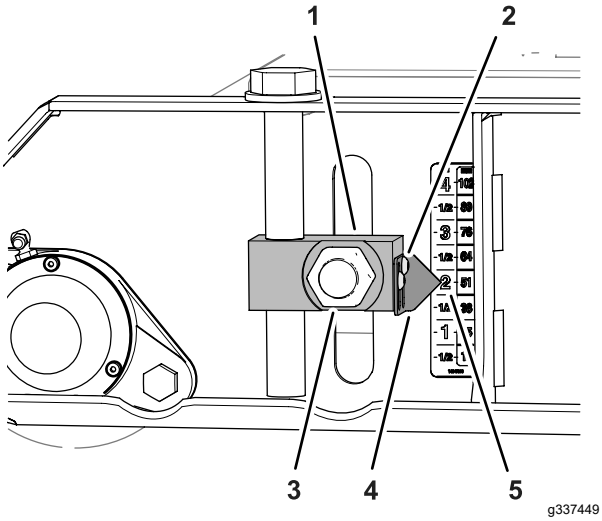

g337449

Figure 82

1. Height-of-cut adjuster
2. Socket-head screw
3. Nut
4. Pointer
5. 51 mm (2 inches) mark (decal)

4. Repeat step 3 at the other height-of-cut adjusters.
5. At the rear roller, raise the left and right height of cut adjusters to the 57 mm (2-1/4 inches) mark on the decal (Figure 83).

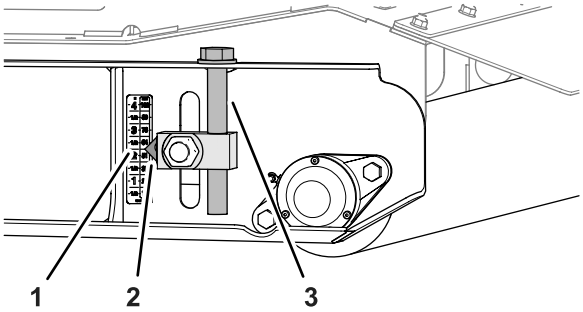

g337440

Figure 83

1. 57 mm (2-1/4 inches) mark (decal)
2. Pointer
3. Height-of-cut adjuster (rear roller)

6. Loosen the socket-head screws that secure the 2 pointers to the height-of-cut adjuster block, align the pointers to the 51 mm (2 inches) mark on the decal, and tighten the screws (Figure 84).

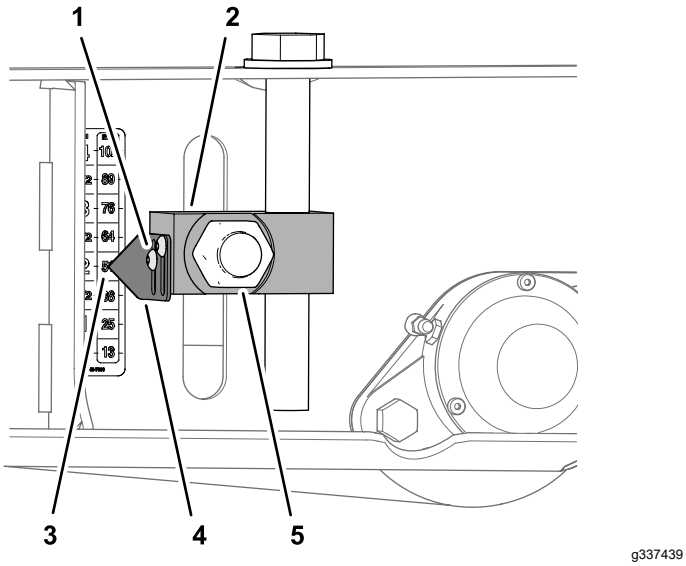

g337439

Figure 84

1. Socket-head screw
2. Height-of-cut adjuster (rear roller)
3. 51 mm (2 inches) mark (decal)
4. Pointer
5. Nut

7. Torque the 4 nuts that secure the 4 height-of-cut adjuster blocks (Figure 82 and Figure 84) for the front and rear rollers to 322 to 396 N·m (238 to 292 ft-lb).

Adjusting the Rear-Mower Deck Locks

Adjust the rear-mower deck locks when the mower deck does not correctly latch the deck pins (Figure 40).

1. Loosen the jam nut (Figure 85).
2. Adjust the bolt up or down to correct the deck lock location for latching the deck pins (Figure 85).

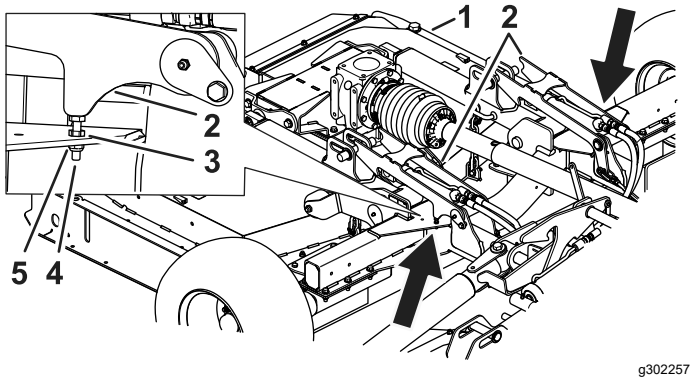

g302257

Figure 85

1. Rear-mower deck locks
2. Deck locks
3. Jam nut
4. Adjustment bolt
5. Nut

3. After adjusting the bolt tighten the jam nut and the nut (Figure 85).

Storage

Storing the Machine

At the end of the mowing season or when the mower is stored for an extended period, carry out the following preventative maintenance:

1. Park the machine on a level surface; engage the parking brake; shut off the engine; remove the key; and wait for all movement to stop before leaving the machine.
2. Clean off any dirt or grease that may have accumulated on the machine or any of the moving parts.
3. Lubricate all grease fittings.
4. Touch up paint any other scratches on the painted surfaces.
5. Replace any missing or damaged decals.
6. When possible, store the mower inside a dry, secure building. If inside storage is not available, cover the machine with a heavy sheet or tarpaulin and secure it tightly.

Notes:

EEA/UK Privacy Notice

Toro's Use of Your Personal Information

The Toro Company ("Toro") respects your privacy. When you purchase our products, we may collect certain personal information about you, either directly from you or through your local Toro company or dealer. Toro uses this information to fulfil contractual obligations - such as to register your warranty, process your warranty claim or to contact you in the event of a product recall - and for legitimate business purposes - such as to gauge customer satisfaction, improve our products or provide you with product information which may be of interest. Toro may share your information with our subsidiaries, affiliates, dealers or other business partners in connection these activities. We may also disclose personal information when required by law or in connection with the sale, purchase or merger of a business. We will never sell your personal information to any other company for marketing purposes.

Retention of your Personal Information

Toro will keep your personal information as long as it is relevant for the above purposes and in accordance with legal requirements. For more information about applicable retention periods please contact legal@toro.com.

Toro's Commitment to Security

Your personal information may be processed in the US or another country which may have less strict data protection laws than your country of residence. Whenever we transfer your information outside of your country of residence, we will take legally required steps to ensure that appropriate safeguards are in place to protect your information and to make sure it is treated securely.

Access and Correction

You may have the right to correct or review your personal data, or object to or restrict the processing of your data. To do so, please contact us by email at legal@toro.com. If you have concerns about the way in which Toro has handled your information, we encourage you to raise this directly with us. Please note that European residents have the right to complain to your Data Protection Authority.

California Proposition 65 Warning Information

What is this warning?

You may see a product for sale that has a warning label like the following:



WARNING: Cancer and Reproductive Harm—www.p65Warnings.ca.gov.

What is Prop 65?

Prop 65 applies to any company operating in California, selling products in California, or manufacturing products that may be sold in or brought into California. It mandates that the Governor of California maintain and publish a list of chemicals known to cause cancer, birth defects, and/or other reproductive harm. The list, which is updated annually, includes hundreds of chemicals found in many everyday items. The purpose of Prop 65 is to inform the public about exposure to these chemicals.

Prop 65 does not ban the sale of products containing these chemicals but instead requires warnings on any product, product packaging, or literature with the product. Moreover, a Prop 65 warning does not mean that a product is in violation of any product safety standards or requirements. In fact, the California government has clarified that a Prop 65 warning "is not the same as a regulatory decision that a product is 'safe' or 'unsafe.'" Many of these chemicals have been used in everyday products for years without documented harm. For more information, go to https://oag.ca.gov/prop65/faqs-view-all.

A Prop 65 warning means that a company has either (1) evaluated the exposure and has concluded that it exceeds the "no significant risk level"; or (2) has chosen to provide a warning based on its understanding about the presence of a listed chemical without attempting to evaluate the exposure.

Does this law apply everywhere?

Prop 65 warnings are required under California law only. These warnings are seen throughout California in a wide range of settings, including but not limited to restaurants, grocery stores, hotels, schools, and hospitals, and on a wide variety of products. Additionally, some online and mail order retailers provide Prop 65 warnings on their websites or in catalogs.

How do the California warnings compare to federal limits?

Prop 65 standards are often more stringent than federal and international standards. There are various substances that require a Prop 65 warning at levels that are far lower than federal action limits. For example, the Prop 65 standard for warnings for lead is 0.5 µg/day, which is well below the federal and international standards.

Why don't all similar products carry the warning?

- Products sold in California require Prop 65 labelling while similar products sold elsewhere do not.
- A company involved in a Prop 65 lawsuit reaching a settlement may be required to use Prop 65 warnings for its products, but other companies making similar products may have no such requirement.
- The enforcement of Prop 65 is inconsistent.
- Companies may elect not to provide warnings because they conclude that they are not required to do so under Prop 65; a lack of warnings for a product does not mean that the product is free of listed chemicals at similar levels.

Why does Toro include this warning?

Toro has chosen to provide consumers with as much information as possible so that they can make informed decisions about the products they buy and use. Toro provides warnings in certain cases based on its knowledge of the presence of one or more listed chemicals without evaluating the level of exposure, as not all the listed chemicals provide exposure limit requirements. While the exposure from Toro products may be negligible or well within the "no significant risk" range, out of an abundance of caution, Toro has elected to provide the Prop 65 warnings. Moreover, if Toro does not provide these warnings, it could be sued by the State of California or by private parties seeking to enforce Prop 65 and subject to substantial penalties.

The Toro Warranty

Two-Year or 1,500 Hours Limited Warranty

Conditions and Products Covered

The Toro Company warrants your Toro Commercial product (“Product”) to be free from defects in materials or workmanship for 2 years or 1,500 operational hours*, whichever occurs first. This warranty is applicable to all products with the exception of Aerators (refer to separate warranty statements for these products). Where a warrantable condition exists, we will repair the Product at no cost to you including diagnostics, labor, parts, and transportation. This warranty begins on the date the Product is delivered to the original retail purchaser.
* Product equipped with an hour meter.

Instructions for Obtaining Warranty Service

You are responsible for notifying the Commercial Products Distributor or Authorized Commercial Products Dealer from whom you purchased the Product as soon as you believe a warrantable condition exists. If you need help locating a Commercial Products Distributor or Authorized Dealer, or if you have questions regarding your warranty rights or responsibilities, you may contact us at:

Toro Commercial Products Service Department
8111 Lyndale Avenue South
Bloomington, MN 55420-1196

952–888–8801 or 800–952–2740
E-mail: commercial.warranty@toro.com

Owner Responsibilities

As the product owner, you are responsible for required maintenance and adjustments stated in your *Operator's Manual*. Repairs for product issues caused by failure to perform required maintenance and adjustments are not covered under this warranty.

Items and Conditions Not Covered

Not all product failures or malfunctions that occur during the warranty period are defects in materials or workmanship. This warranty does not cover the following:

- Product failures which result from the use of non-Toro replacement parts, or from installation and use of add-on, or modified non-Toro branded accessories and products.
- Product failures which result from failure to perform recommended maintenance and/or adjustments.
- Product failures which result from operating the Product in an abusive, negligent, or reckless manner.
- Parts consumed through use that are not defective. Examples of parts which are consumed, or used up, during normal Product operation include, but are not limited to, brake pads and linings, clutch linings, blades, reels, rollers and bearings (sealed or greasable), bed knives, spark plugs, castor wheels and bearings, tires, filters, belts, and certain sprayer components such as diaphragms, nozzles, flow meters, and check valves.
- Failures caused by outside influence, including, but not limited to, weather, storage practices, contamination, use of unapproved fuels, coolants, lubricants, additives, fertilizers, water, or chemicals.
- Failure or performance issues due to the use of fuels (e.g. gasoline, diesel, or biodiesel) that do not conform to their respective industry standards.
- Normal noise, vibration, wear and tear, and deterioration. Normal “wear and tear” includes, but is not limited to, damage to seats due to wear or abrasion, worn painted surfaces, scratched decals or windows.

Parts

Parts scheduled for replacement as required maintenance are warranted for the period of time up to the scheduled replacement time for that part. Parts replaced under this warranty are covered for the duration of the original product warranty and become the property of Toro. Toro will make the final decision whether to repair any existing part or assembly or replace it. Toro may use remanufactured parts for warranty repairs.

Deep Cycle and Lithium-Ion Battery Warranty

Deep cycle and Lithium-Ion batteries have a specified total number of kilowatt-hours they can deliver during their lifetime. Operating, recharging, and maintenance techniques can extend or reduce total battery life. As the batteries in this product are consumed, the amount of useful work between charging intervals will slowly decrease until the battery is completely worn out. Replacement of worn out batteries, due to normal consumption, is the responsibility of the product owner.
Note: (Lithium-Ion battery only): Refer to the battery warranty for additional information.

Lifetime Crankshaft Warranty (ProStripe 02657 Model Only)

The Prostripe which is fitted with a genuine Toro Friction Disc and Crank-Safe Blade Brake Clutch (integrated Blade Brake Clutch (BBC) + Friction Disc assembly) as original equipment and used by the original purchaser in accordance with recommended operating and maintenance procedures, are covered by a Lifetime Warranty against engine crankshaft bending. Machines fitted with friction washers, Blade Brake Clutch (BBC) units and other such devices are not covered by the Lifetime Crankshaft Warranty.

Maintenance is at Owner’s Expense

Engine tune-up, lubrication, cleaning and polishing, replacement of filters, coolant, and completing recommended maintenance are some of the normal services Toro products require that are at the owner’s expense.

General Conditions

Repair by an Authorized Toro Distributor or Dealer is your sole remedy under this warranty.

The Toro Company is not liable for indirect, incidental or consequential damages in connection with the use of the Toro Products covered by this warranty, including any cost or expense of providing substitute equipment or service during reasonable periods of malfunction or non-use pending completion of repairs under this warranty. Except for the Emissions warranty referenced below, if applicable, there is no other express warranty. All implied warranties of merchantability and fitness for use are limited to the duration of this express warranty.

Some states do not allow exclusions of incidental or consequential damages, or limitations on how long an implied warranty lasts, so the above exclusions and limitations may not apply to you. This warranty gives you specific legal rights, and you may also have other rights which vary from state to state.

Note Regarding Emissions Warranty

The Emissions Control System on your Product may be covered by a separate warranty meeting requirements established by the U.S. Environmental Protection Agency (EPA) and/or the California Air Resources Board (CARB). The hour limitations set forth above do not apply to the Emissions Control System Warranty. Refer to the Engine Emission Control Warranty Statement supplied with your product or contained in the engine manufacturer’s documentation.

Countries Other than the United States or Canada

Customers who have purchased Toro products exported from the United States or Canada should contact their Toro Distributor (Dealer) to obtain guarantee policies for your country, province, or state. If for any reason you are dissatisfied with your Distributor's service or have difficulty obtaining guarantee information, contact your Authorized Toro Service Center.