Installation Instructions

Courtyard Optional Screen

Models: ODCOUG-36SCN, ODCOUG-42SCN

This kit has been tested for use with specific Hearth & Home Technologies products. Check with your local building code agency before you begin installation to ensure compliance with local codes, including the need for permits and follow-up inspections. If you encounter any problems regarding code approvals, or if you need clarification of any of the instructions contained here, contact your Hearth & Home Technologies dealer. For the dealer nearest you, please visit www.hearthn-home.com.

For use with Courtyard Outdoor Gas Appliance.

Model	Kit
ODCOUG-36NR	ODCOUG-36SCN
ODCOUG-36TS	
ODCOUG-42NR	ODCOUG-42SCN
ODCOUG-42TS	

CAUTION: Allow appliance to cool completely before attempting to install or remove screen.

Before You Start

This optional screen allows a layer of protection for your outdoor gas appliance from leaves, branches and other large debris and is designed to be left in place during operation. Read instructions completely before installing optional screen. This screen can be installed easily after unit installation or at any time after.

KIT CONTENTS:

- (1) Screen Assembly
- (1) Hood
- (1) Inner Hood
- (1) Fastener Pack

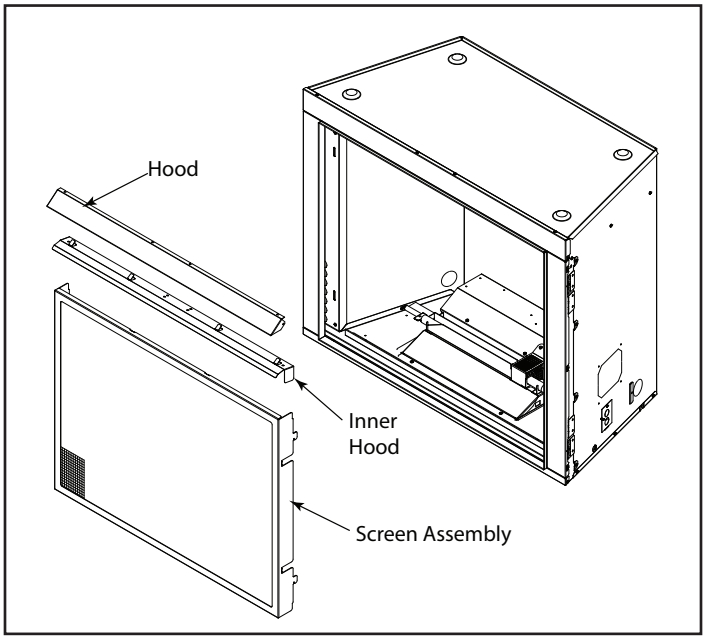

Figure 1

INSTALLATION INSTRUCTIONS:

1. Inspect new Screen Front for any damage.
2. Locate and loosen the (4) screws securing the existing appliance hood. Remove the hood and discard. A replacement hood has been provided for use with this optional Screen Front kit. See Figure 2.

Figure 2

3. Locate (1) screw securing the right-side mesh screen and screen rod in place and remove. See Figure 3.
4. Lower the center of the screen rod to disengage rod from the mounting hole located on the right side of the appliance. Repeat this process on the left-side mesh screen. Set aside, mesh screens will no longer be needed.

Figure 3

Note: Mesh screens and rods cannot be used with the optional screen kit.

5. Carefully remove protective coating from new stainless steel parts.
6. Install replacement hood and tighten (4) screws to secure.
7. To install Lower Hood, bend (4) hand tabs on Lower Hood up at approximately 30 degrees. See Figure 4.

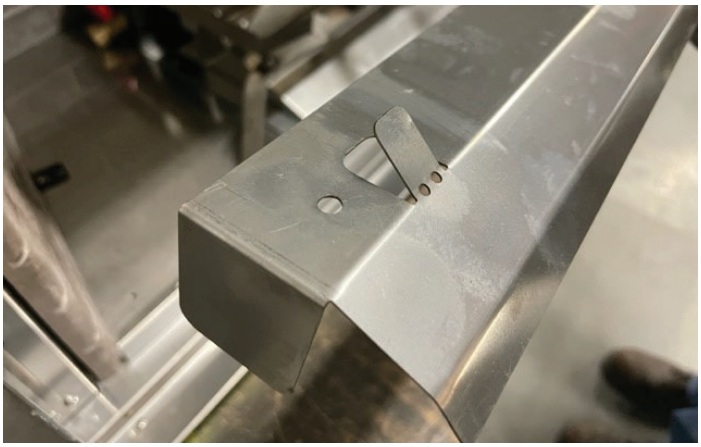

Figure 4

8. Position Lower Hood on front edge of firebox top, as shown. Secure the hood with (4) screws provided. See Figure 5.

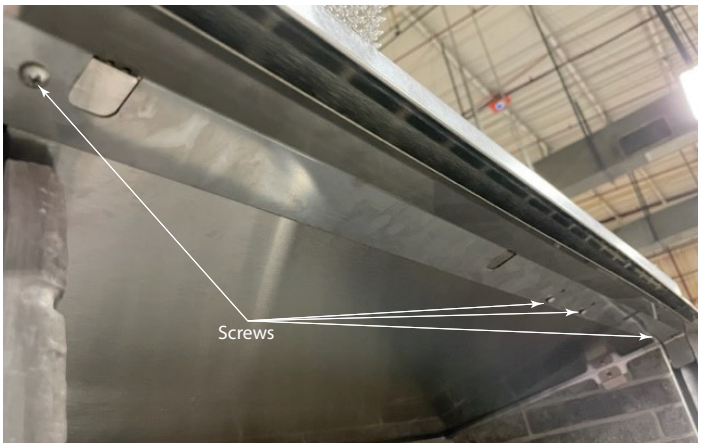

Figure 5

Note: Bent tabs should be on the top side of the firebox top.

9. Locate the screen mounting slots (4) inside of the appliance opening. Mating mounting tabs (4) are located on the right and left sides of the Screen Front. See Figure 6.

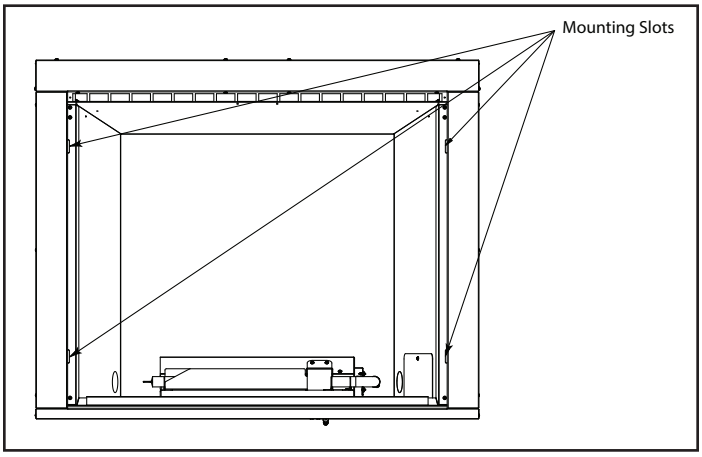

Figure 6

10. Lift the Screen Front and hang on the appliance, ensuring that all tabs are inserted into the mounting slots. See Figure 7.

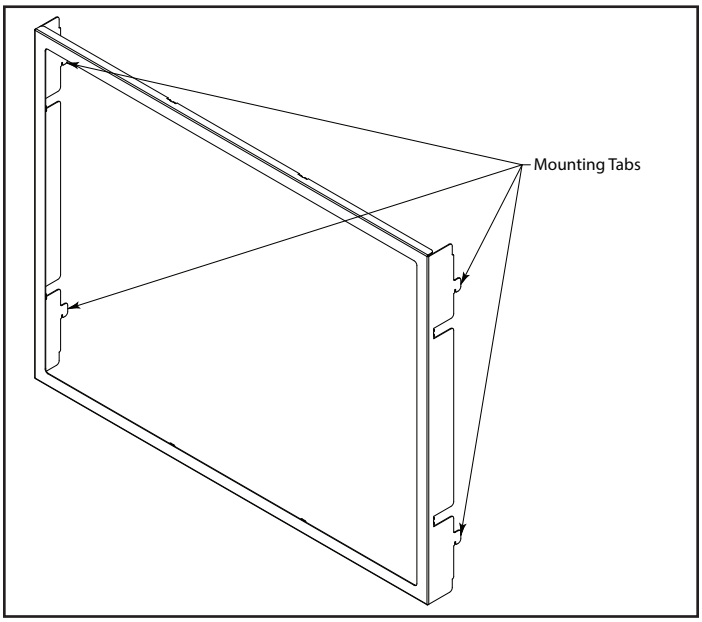

Figure 7

11. Using cleaner designed for use on stainless steel, apply cleaner to a terry cloth and wipe appliance following the grain of the stainless. Do not spray cleaner directly onto the appliance. Remove any fingerprints present after installation.

Please contact your Hearth & Home Technologies dealer with any questions or concerns. For the location of your nearest Hearth & Home Technologies dealer, please visit www.hearthnhome.com.