# Owner's Manual and Installation Instructions

## 29-Inch Wide ELECTRIC DRYERS

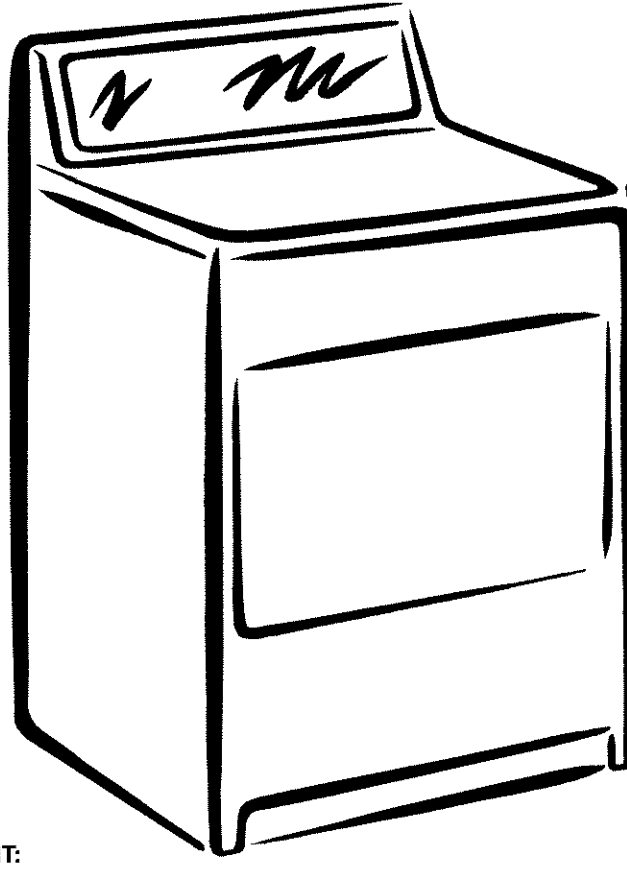

ENGLISH ESPAÑOL

**IMPORTANT:**
Read and follow all safety and operating instructions before first use of this product.

**Sears, Roebuck and Co., Hoffman Estates, IL 60179 U.S.A.**
**www.sears.com**

**3979089B** PRINTED IN U.S.A. 12/01

# TABLE OF CONTENTS


BEFORE USING YOUR NEW DRYER ____ 2

KENMORE DRYER WARRANTY ____ 3

DRYER SAFETY ____ 4

INSTALLATION INSTRUCTIONS ____ 6

DRYER USE ____ 19

LAUNDRY TIPS ____ 25

DRYER CARE ____ 27

TROUBLESHOOTING ____ 30

WE SERVICE WHAT WE SELL ____ 32


# BEFORE USING YOUR NEW DRYER

Please read this manual. It will help you install and operate your new Kenmore dryer in the most economical way.

If you need more information about the care and operation of Kenmore appliances call your nearest Sears store. You will need the complete model and serial numbers when requesting information. Your dryer's model and serial numbers are located on the Model and Serial Number Plate.

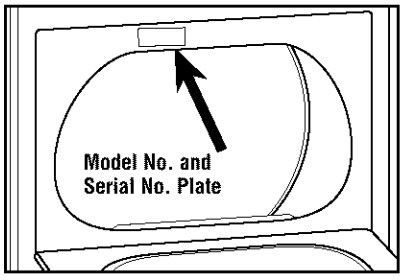


**Product Record**

Use the space below to record the model number and serial number of your new Kenmore dryer.

Model No. _____

Serial No. _____

Date of Purchase _____

**Keep this book and your Sears Salescheck (receipt) in a safe place for future reference.**

# KENMORE DRYER WARRANTY

## Full One Year Warranty on Mechanical and Electrical Parts

For one year from the date of purchase, if this dryer is installed and operated according to the instructions in this manual, Sears will repair or replace any of its mechanical or electrical parts if they are defective in material or workmanship.

**NOTE:** Exhausting your dryer with a plastic vent may void this warranty. See "Installation Instructions" for the complete exhaust requirements for this dryer.

## Warranty Restriction

If the dryer is subjected to other than private family use, all warranty coverage is effective for only 90 days.

## Warranty Service

Warranty service is available by contacting your nearest Sears Service Center in the United States.

This warranty applies only while this dryer is in use in the United States.

This warranty gives you specific legal rights, and you may also have other rights which vary from state to state.

**Sears, Roebuck and Co., Dept. 817WA, Hoffman Estates, IL 60179.**

For Sears Warranty information or to contact a Sears Service Center, please reference the service numbers located on the back page of this manual.

ENGLISH

# DRYER SAFETY

## Your safety and the safety of others are very important.

We have provided many important safety messages in this manual and on your appliance. Always read and obey all safety messages.

This is the safety alert symbol. This symbol alerts you to potential hazards that can kill or hurt you and others. All safety messages will follow the safety alert symbol and either the word "DANGER" or "WARNING." These words mean:

**⚠ DANGER** — **You can be killed or seriously injured if you don't immediately follow instructions.**

**⚠ WARNING** — **You can be killed or seriously injured if you don't follow instructions.**

All safety messages will tell you what the potential hazard is, tell you how to reduce the chance of injury, and tell you what can happen if the instructions are not followed.

## IMPORTANT SAFETY INSTRUCTIONS

**WARNING:** To reduce the risk of fire, electric shock, or injury to persons when using the dryer, follow basic precautions, including the following:

- Read all instructions before using the dryer.
- Do not place items exposed to cooking oils in your dryer. Items contaminated with cooking oils may contribute to a chemical reaction that could cause a load to catch fire.
- Do not dry articles that have been previously cleaned in, washed in, soaked in, or spotted with gasoline, dry-cleaning solvents, other flammable, or explosive substances as they give off vapors that could ignite or explode.
- Do not allow children to play on or in the dryer. Close supervision of children is necessary when the dryer is used near children.
- Before the dryer is removed from service or discarded, remove the door to the drying compartment.
- Do not reach into the dryer if the drum is moving.
- Do not install or store the dryer where it will be exposed to the weather.
- Do not tamper with controls.
- Do not repair or replace any part of the dryer or attempt any servicing unless specifically recommended in this Owner's Manual or in published user-repair instructions that you understand and have the skills to carry out.
- Do not use fabric softeners or products to eliminate static unless recommended by the manufacturer of the fabric softener or product.
- Do not use heat to dry articles containing foam rubber or similarly textured rubber-like materials.
- Clean lint screen before or after each load.
- Keep area around the exhaust opening and adjacent surrounding areas free from the accumulation of lint, dust, and dirt.
- The interior of the dryer and exhaust vent should be cleaned periodically by qualified service personnel.
- See the "INSTALLATION INSTRUCTIONS" section for grounding requirements.

**SAVE THESE INSTRUCTIONS**

# INSTALLATION INSTRUCTIONS

## Tools and Parts

Check that you have everything necessary for correct installation. Proper installation is your responsibility.

- flat-blade screwdriver
- adjustable wrench that opens to 1 in. or hex-head socket wrench (for adjusting dryer feet)
- level
- wire stripper (direct wire installations)
- #2 Phillips screwdriver
- safety glasses
- duct tape
- caulking gun and compound (for installing new exhaust vent)
- gloves
- tin snips (new vent installations)

**Parts supplied:**
Remove parts package from dryer drum. Check that all parts were included.

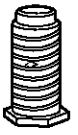

*4 leveling legs*

**Parts needed:**
Check local codes, check existing electrical supply and venting and see "Electrical Requirements" and "Venting Requirements" before purchasing parts.

**Mobile home installations require:**
- Metal exhaust system hardware available for purchase from your local Sears store or Sears Service Center.

## Location Requirements

**⚠WARNING**

**Explosion Hazard**

**Keep flammable materials and vapors, such as gasoline, away from dryer.**

**Place dryer at least 18 inches (46 cm) above the floor for a garage installation.**

**Failure to do so can result in death, explosion, or fire.**

**You will need**
- A location that allows for proper exhaust installation. See "Venting Requirements."
- A separate 30 amp circuit.
- A grounded electrical outlet located within 2 ft (61 cm) of either side of the dryer. See "Electrical Requirements."
- A sturdy floor to support the total dryer weight of 200 lbs (90.7 kg).
- A level floor with a maximum slope of 1 in. (2.5 cm) under entire dryer. (If slope is greater than 1 in. [2.5 cm], install Extended Dryer Feet kit, Part No. 279810.) Clothes may not tumble properly and dryers with automatic sensor cycles may not operate correctly if dryer is not level.

Do not operate or store your dryer in a location with year-round temperatures below 45°F (7°C). At lower temperatures, the dryer might not shut off at the end of an automatic cycle. Drying times can be extended.

Install the dryer where it is protected from water and/or weather.

Check code requirements. Some codes limit, or do not permit, installation of the dryer in garages, closets, mobile homes, or sleeping quarters. Contact your local building inspector.

**Installation Clearances**
The location must be large enough to fully open the dryer door.

**Dryer Dimensions**

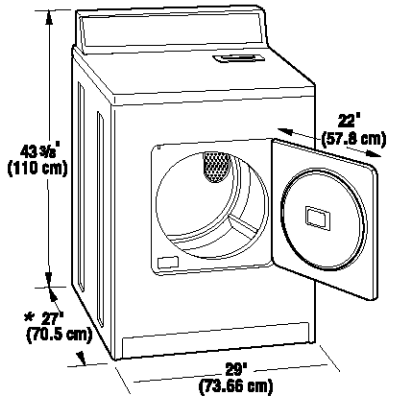


*1. Small Opening Side-Swing Door*

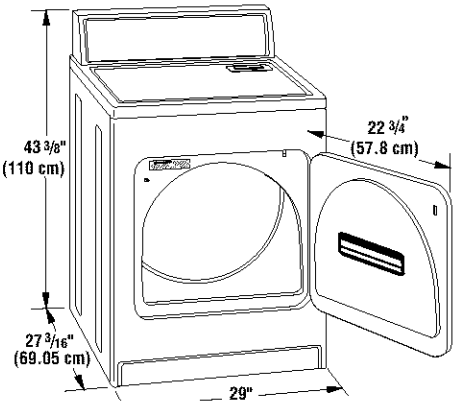


*3. Wide Opening Side-Swing Door*

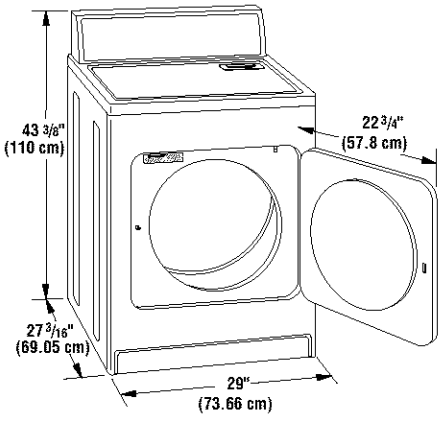


*2. Large Opening Side-Swing Door*

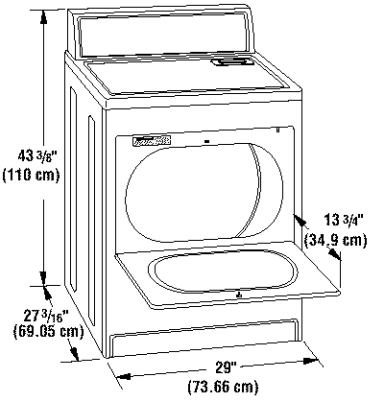


*4. Wide Opening Hamper Door*

*Most installations require a minimum 5½ in. (14 cm) clearance behind the dryer for the exhaust vent with elbow. See "Venting Requirements."

ENGLISH

**Minimum installation spacing for recessed area or closet installation**
The dimensions shown following are for the minimum spacing allowed.

- Additional spacing should be considered for ease of installation and servicing.
- Additional clearances might be required for wall, door and floor moldings.
- Additional spacing of 1 in. (2.5 cm) on all sides of the dryer is recommended to reduce noise transfer.
- For closet installation, with a door, minimum ventilation openings in the top and bottom of the door are required. Louvered doors with equivalent ventilation openings are acceptable.
- Companion appliance spacing should also be considered.

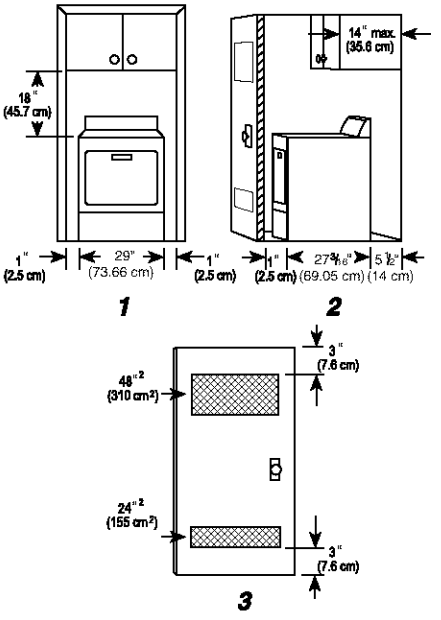


*1. Recessed Area*
*2. Side view - closet or confined area*
*3. Closet door with vents*

**Mobile Home-Additional Installation Requirements**
This dryer is suitable for mobile home installations. The installation must conform to the Manufactured Home Construction and Safety Standard, Title 24 CFR, Part 3280 (formerly the Federal Standard for Mobile Home Construction and Safety, Title 24, HUD Part 280).

**Mobile home installations require:**

- Metal exhaust system hardware which is available for purchase from your local Sears store or Sears Service Center.
- Special provisions must be made in mobile homes to introduce outside air into the dryer. The opening (such as a nearby window) should be at least twice as large as the dryer exhaust opening.

## Electrical Requirements

**It is your responsibility:**

- To contact a qualified electrical installer.
- To be sure that the electrical connection is adequate and in conformance with the National Electrical Code, ANSI/NFPA 70-latest edition and all local codes and ordinances.

  A copy of the above code standards can be obtained from: National Fire Protection Association, Batterymarch Park, Quincy, MA 02269.
- To supply the required 3 or 4 wire, single phase, 120/240-volt, 60-Hz., AC-only electrical supply (or 3 or 4 wire, 120/208-volt electrical supply, if specified on the serial/rating plate) on a separate 30-amp circuit, fused on both sides of the line. A time-delay fuse or circuit breaker is recommended. Connect to an individual branch circuit. Do not have a fuse in the neutral or grounding circuit.
- Do not use an extension cord.
- If codes permit and a separate ground wire is used, it is recommended that a qualified electrician determine that the ground path is adequate.

**Electrical Connection**
To properly install your dryer, you must determine the type of electrical connection you will be using and follow the instructions provided for it here.

- If local codes do not permit the connection of a cabinet ground connector to the neutral wire, see "Optional 3-wire connection" section.
- This dryer is manufactured with a 3-wire, cabinet-ground conductor connected to the NEUTRAL (white or center wire) of the wiring harness at the terminal block.
- Use a 4-wire conductor cord when the dryer is installed in a mobile home or an area where local codes do not permit grounding through the neutral.

**If using a power supply cord:**

Use a UL approved power supply cord kit marked for use with clothes dryers. the kit should contain:

- A UL approved 30 amp power supply cord, rated 120/240 volt minimum. The cord should be type SRD or SRDT and be at least 4 ft (1.22 m) long. The wires that connect to the dryer must end in ring terminals or spade terminals with upturned ends.
- A UL approved strain relief.

**If your outlet looks like this:**

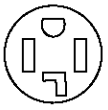

*4-wire receptacle (14-30R)*

Then choose a 4-wire power supply cord with ring or spade terminals and UL approved strain relief. The 4-wire power supply cord, at least 4 ft (1.22 m) long, must have 4, 10 gauge solid copper wires and match a 4-wire receptacle of NEMA Type 14-30R. The ground wire (ground conductor) may be either green or bare. The neutral conductor must be identified by a white cover.

**If your outlet looks like this:**

*3-wire receptacle (10-30R)*

Then choose a 3-wire power supply cord with ring or spade terminals and UL approved strain relief. The 3-wire power supply cord, at least 4 ft (1.22 m) long, must have 3, No.-10 copper wires and match a 3-wire receptacle of NEMA Type 10-30R.

**If connecting by direct wire:**

Power supply cable must match power supply (4-wire or 3-wire) and be:

- Flexible armored or non-metallic sheathed copper cable (with ground wire). All current-carrying wires must be insulated.
- 10 gauge solid copper wire (Do not use aluminum.)
- At least 4 ft (1.22 m) long

## GROUNDING INSTRUCTIONS

• For a grounded, cord-connected dryer:

This dryer must be grounded. In the event of malfunction or breakdown, grounding will reduce the risk of electric shock by providing a path of least resistance for electric current. This dryer uses a cord having an equipment-grounding conductor and a grounding plug. The plug must be plugged into an appropriate outlet that is properly installed and grounded in accordance with all local codes and ordinances.

• For a permanently connected dryer:

This dryer must be connected to a grounded metal, permanent wiring system, or an equipment-grounding conductor must be run with the circuit conductors and connected to the equipment-grounding terminal or lead on the dryer.

**WARNING:** Improper connection of the equipment-grounding conductor can result in a risk of electric shock. Check with a qualified electrician or service representative or personnel if you are in doubt as to whether the appliance is properly grounded.Do not modify the plug on the power supply cord: if it will not fit the outlet, have a proper outlet installed by a qualified electrician.

**SAVE THESE INSTRUCTIONS**

# Electrical Connection

## Power Supply Cord

**⚠WARNING**

**Fire Hazard**

**Use a new UL approved 30 amp power supply cord.**

**Use a UL approved strain relief.**

**Disconnect power before making electrical connections.**

**Connect neutral wire (white or center wire) to center terminal (silver).**

**Ground wire (green or bare wire) must be connected to green ground connector.**

**Connect remaining 2 supply wires to remaining 2 terminals (gold).**

**Securely tighten all electrical connections.**

**Failure to do so can result in death, fire, or electrical shock.**

1. Disconnect power.
2. Remove the hold-down screw and terminal block cover.

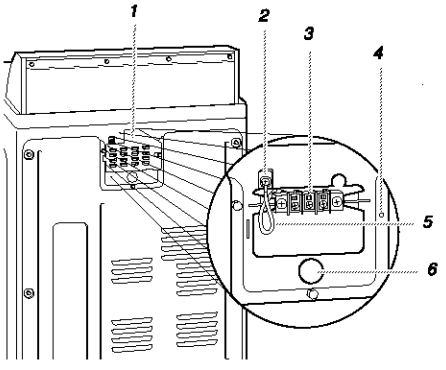


*1. Terminal block cover*
*2. External ground connector*
*3. Center, silver-colored terminal-block screw*
*4. Hold-down screw location*
*5. Neutral grounding wire (green/yellow)*
*6. Hole below terminal block opening*

## Direct Wire

**⚠WARNING**

**Fire Hazard**

**Use 10 gauge solid copper wire.**

**Use a UL approved strain relief.**

**Disconnect power before making electrical connections.**

**Connect neutral wire (white or center wire) to center terminal (silver).**

**Ground wire (green or bare wire) must be connected to green ground connector.**

**Connect remaining 2 supply wires to remaining 2 terminals (gold).**

**Securely tighten all electrical connections.**

**Failure to do so can result in death, fire, or electrical shock.**

3. Assemble a 3/4 in. (1.9 cm) UL approved strain relief (UL marking on strain relief) into the hole below the terminal block opening. Tighten strain relief screws just enough to hold the two clamp sections together. Put power supply cord through the strain relief. The strain relief should have a tight fit with the dryer cabinet and be in a horizontal position.

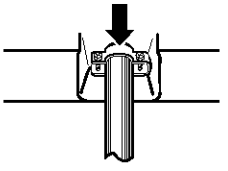

4. Now complete installation following instructions for your type of electrical connection:
   4-wire (recommended)
   3-wire (if 4-wire is not available)

## Electrical Connection Options

| If your home has: | And you will be connecting to: | Go to Section: |
|---|---|---|
| 4-wire receptacle (NEMA Type 14-30R) | A UL listed, 120/240 volt minimum, 30 amp., dryer power supply cord* | 4-wire connection: Power Supply Cord |
| 4-wire direct | A fused disconnect or circuit breaker box* | 4-wire connection: Direct Wire |
| 3-wire receptacle (NEMA type 10-30R) | A UL listed, 120/240 volt minimum, 30 amp., dryer power supply cord* | 3-wire connection: Power Supply Cord |
| 3-wire direct | A fused disconnect or circuit breaker box* | 3-wire connection: Direct Wire |

*If local codes do not permit the connection of a frame-grounding conductor to the neutral wire, go to "Optional 3-wire connection" section.

## 4-wire connection: Power Supply Cord

**IMPORTANT:** A 4-wire connection is required for mobile homes and where local codes do not permit the use of 3-wire connections.

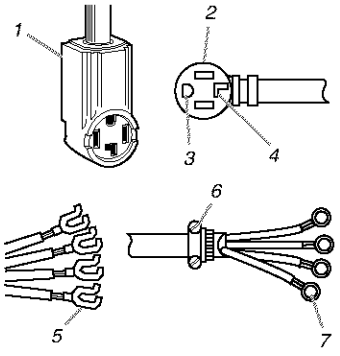


*1. 4-wire receptacle (NEMA type 14-30R)*
*2. 4-prong plug*
*3. Ground prong*
*4. Neutral prong*
*5. Spade terminals with upturned ends*
*6. 3/4 in. (1.9 cm) UL approved strain relief*
*7. Ring terminals*

1. Remove center terminal block screw.
2. Remove appliance ground wire (green with yellow stripes) from external ground connector screw. Fasten it under center, silver colored terminal block screw.

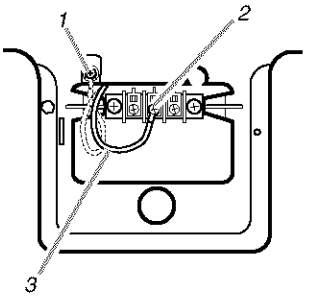


*1. External ground connector - Dotted line shows position of NEUTRAL ground wire before being moved to center terminal block screw*
*2. Center silver-colored terminal block screw*
*3. Green/yellow wire of harness*

3. Connect ground wire (green or bare) of power supply cord to external ground conductor screw. Tighten screw.
4. Connect neutral wire (white or center wire) of power supply cord under center screw of the terminal block.

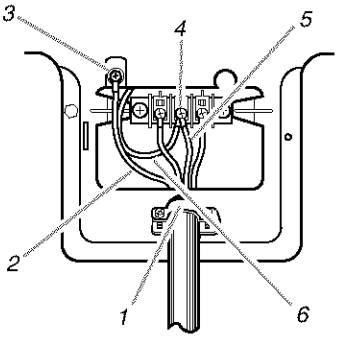


*1. 3/4 in. (1.9 cm), UL-listed strain relief*
*2. Green wire of power supply cord or bare copper wire*
*3. External ground connector*
*4. Center silver-colored terminal block screw*
*5. Neutral wire (white)*
*6. Neutral grounding wire (green/yellow)*

5. Connect the other wires to outer terminal block screws. Tighten screws.
6. Tighten strain relief screws.
7. Insert tab of terminal block cover into slot of dryer rear panel. Secure cover with hold-down screw.

ENGLISH

## 4-wire connection: Direct Wire

**IMPORTANT:** A 4-wire connection is required for mobile homes and where local codes do not permit the use of 3-wire connections.

Direct wire cable must have 5 ft (1.52 m) of extra length so dryer can be moved if needed.

Strip 5 in. (12.7 cm) of outer covering from end of cable, leaving bare ground wire at 5 in. (12.7 cm). Cut 1½ in. (3.8 cm) from 3 remaining wires. Strip insulation back 1 in. (2.5 cm). Bend ends of wires into a hook shape.

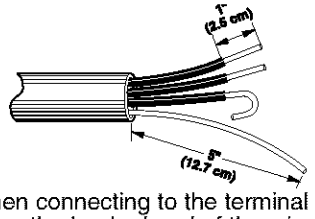


When connecting to the terminal block, place the hooked end of the wire under the screw of the terminal block (hook facing right), squeeze hooked end together and tighten screw.

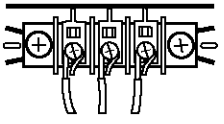

1. Remove center terminal block screw.
2. Remove appliance ground wire (green with yellow stripes) from external ground connector screw. Fasten it under center, silver colored terminal block screw.

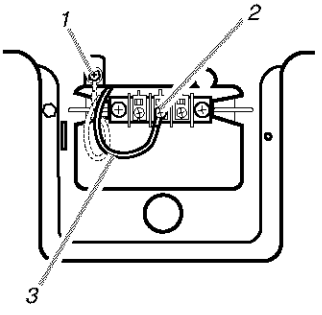


*1. External ground connector - Dotted line shows position of NEUTRAL ground wire before being moved to center terminal block screw*
*2. Center silver-colored terminal block screw*
*3. Green/yellow wire of harness*

3. Connect ground wire (green or bare) of power supply cable to external ground conductor screw. Tighten screw.
4. Place the hooked end of the neutral wire (white or center wire) of power supply cable under the center screw of terminal block (hook facing right). Squeeze hooked end together. You now have the appliance ground wire and the neutral wire on the same terminal. Tighten screw.

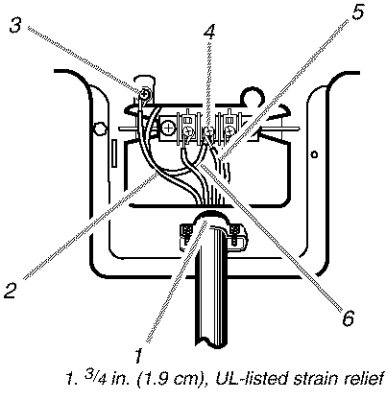


*1. ¾ in. (1.9 cm), UL-listed strain relief*
*2. Green or bare copper wire of power supply cord*
*3. External ground connector*
*4. Center silver-colored terminal block screw*
*5. Neutral wire (white)*
*6. Neutral grounding wire (green/yellow)*

5. Place the hooked ends of the other power supply cable wires under the outer terminal block screws (hooks facing right). Squeeze hooked ends together. Tighten screws.

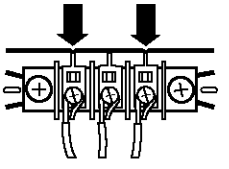

6. Tighten strain relief screws.
7. Insert tab of terminal block cover into slot of dryer rear panel. Secure cover with hold-down screw.

## 3-wire connection: Power Supply Cord

**Use where local codes permit connecting cabinet-ground conductor to neutral wire:**

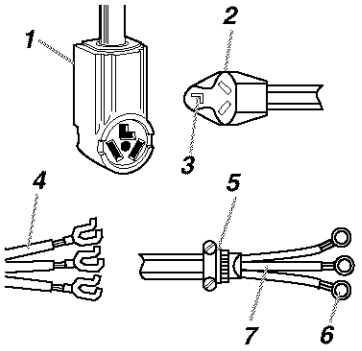


*1. 3-wire receptacle (NEMA type 10-30R)*
*2. 3-wire plug*
*3. Neutral prong*
*4. Spade terminals with upturned ends*
*5. 3/4 in. (1.9 cm) UL approved strain relief*
*6. Ring terminals*
*7. Neutral (white or center wire)*

1. Loosen or remove center terminal block screw.
2. Connect neutral wire (white or center wire) of power supply cord to the center, silver colored terminal screw of the terminal block. Tighten screw.

*1. Neutral grounding wire (green/yellow)*

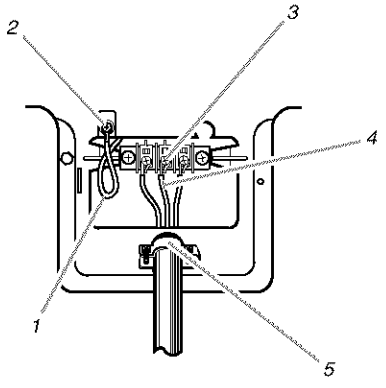


*2. External ground connector*
*3. Center silver-colored terminal block screw*
*4. Neutral wire (white)*
*5. 3/4 in. (1.9 cm) UL-listed strain relief*

3. Connect the other wires to outer terminal block screws. Tighten screws.
4. Tighten strain relief screws.
5. Insert tab of terminal block cover into slot of dryer rear panel. Secure cover with hold-down screw.

## 3-wire connection: Direct Wire

**Use where local codes permit connecting cabinet-ground conductor to neutral wire.**

Direct wire cable must have 5 ft (1.52 m) of extra length so dryer can be moved if needed.

Strip 3 1/2 in. (8.9 cm) of outer covering from end of cable. Strip insulation back 1 in. (2.5 cm). If using 3-wire cable with ground wire, cut bare wire even with outer covering. Bend ends of wires into a hook shape.

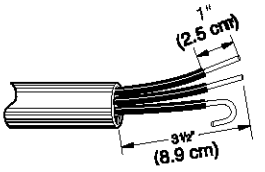


When connecting to the terminal block, place the hooked end of the wire under the screw of the terminal block (hook facing right), squeeze hooked end together and tighten screw.

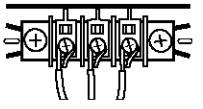

1. Loosen or remove center terminal block screw.
2. Place the hooked end of the neutral wire (white or center wire) of power supply cable under the center screw of terminal block (hook facing right). Squeeze hooked end together. Tighten screw.

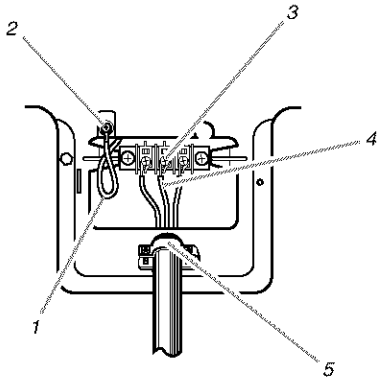


*1. Neutral grounding wire (green/yellow)*
*2. External ground connector*
*3. Center silver-colored terminal block screw*
*4. Neutral wire (white)*
*5. 3/4 in.(1.9 cm) UL-listed strain relief*

ENGLISH

3. Place the hooked ends of the other power supply cable wires under the outer terminal block screws (hooks facing right). Squeeze hooked ends together. Tighten screws.

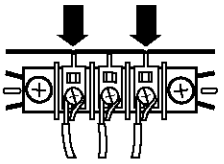

4. Tighten strain relief screws.
5. Insert tab of terminal block cover into slot of dryer rear panel. Secure cover with hold-down screw.

## Optional 3-wire connection

**Use for direct wire or power supply cord where local codes do not permit connecting cabinet-ground conductor to neutral wire.**

1. Remove center terminal block screw.
2. Remove appliance ground wire (green with yellow stripes) from external ground connector screw. Connect appliance ground wire and the neutral wire (white or center wire) of power supply cord/cable under center, silver colored terminal block screw. Tighten screw.
3. Connect the other wires to outer terminal block screws. Tighten screws.

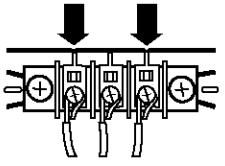

4. Tighten strain relief screws.
5. Insert tab of terminal block cover into slot of dryer rear panel. Secure cover with hold-down screw.

6. Connect a separate copper ground wire from the external ground connector screw to an adequate ground.

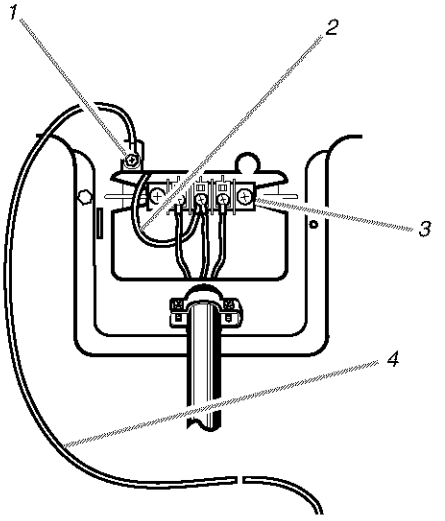


*1. External ground connector*
*2. Neutral grounding wire (green/yellow)*
*3. Neutral wire (white)*
*4. Grounding path determined by a qualified electrician*

## Venting Requirements

**⚠WARNING**

**Fire Hazard**

**Use a heavy metal vent.**

**Do not use a plastic vent.**

**Do not use a metal foil vent.**

**Failure to follow these instructions can result in death or fire.**

**WARNING:** To reduce the risk of fire, this dryer MUST BE EXHAUSTED OUTDOORS.

4 in. (10.2 cm) heavy metal exhaust vent and clamps must be used. DURASAFE™ venting products are recommended and are available from your local Sears store or Sears Service Center.

DURASAFE vent products can be purchased from your dealer. Please reference the service numbers located on the back of the manual or visit our Internet site at: www.sears.com.

- Do not exhaust the dryer into any gas vent, chimney, wall, ceiling, or a concealed space of a building.
- Do not use an exhaust hood with a magnetic latch.
- Do not install flexible metal vent in enclosed walls, ceilings or floors.
- Do not use screws or other fastening devices that extend into the interior of the vent to secure vent.

**IMPORTANT:** Observe all governing codes and ordinances.

**Improper venting can cause moisture and lint to collect indoors, which may result in:**

- Moisture damage to woodwork, furniture, paint, wallpaper, carpets, etc.
- Housecleaning problems and health problems.

Use a heavy metal vent. Do not use plastic or metal foil vent.

Rigid metal vent is recommended to prevent crushing and kinking.

Flexible metal vent must be fully extended and supported when the dryer is in its final position. Remove excess flexible metal vent to avoid sagging and kinking that may result in reduced airflow.

An exhaust hood should cap the vent to prevent rodents and insects from entering the home.

Exhaust hood must be at least 12 in. (30.5 cm) from the ground or any object that may be in the path of the exhaust (such as flowers, rocks or bushes, etc.).

If using an existing vent system, clean lint from the entire length of the system and make sure exhaust hood is not plugged with lint. Replace any plastic or metal foil vent with rigid metal or flexible metal vent.

Use duct tape to seal all joints.

## Plan Vent System

**Typical Exhaust Installations**

Typical installations vent the dryer from the rear of the dryer.

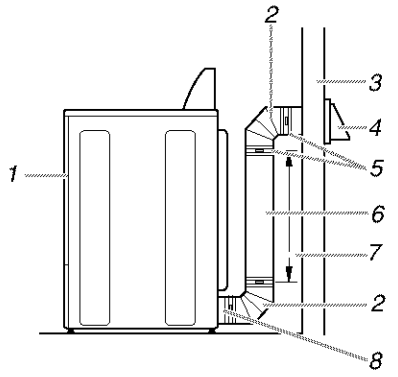


*1. Dryer*
*2. Elbow*
*3. Wall*
*4. Exhaust hood*
*5. Duct tape and clamps*
*6. Rigid metal or flexible metal vent*
*7. Vent length necessary to connect elbows*
*8. Exhaust outlet*

ENGLISH

**Standard exhaust installation with rigid metal or flexible metal vent**

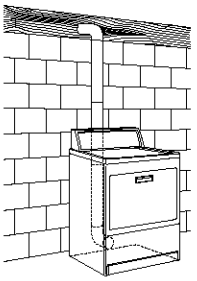

**Alternate installations for close clearances**

Venting systems come in many varieties. Select the type best for your installation. Two close-clearance installations are shown. Refer to the manufacturer's instructions.

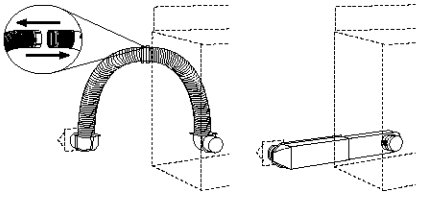

*1. Over-The-Top installation (also available with one offset elbow)*
*2. Periscope installation*

**NOTE:** The following kits for close clearance alternate installations are available for purchase. Please see the service number located on the back page of this manual to order.

- Over-The-Top Installation:

  Part Number 26-49900

- Periscope Installation (For use with dryer vent to wall vent mismatch):

  Part Number 26-49901 - Less than 5 in. (12.7 cm) mismatch

  Part Number 26-49908 - 5 in. (12.7 cm) to 18 in. (45.72 cm) mismatch

  Part Number 26-49904 - 18 in. (45.72 cm) to 29 in. (73.66 cm) mismatch

  Part Number 26-49905 - 29 in. (73.66 cm) to 50 in. (127 cm) mismatch

**Special provisions for mobile home installations**

The exhaust vent must be securely fastened to a noncombustible portion of the mobile home structure. Do not use screws or other fastening devices that extend into

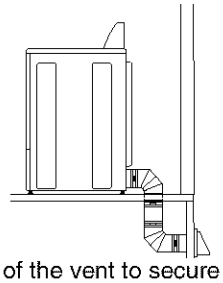

the interior of the vent to secure vent. Terminate the exhaust vent outside. The exhaust vent must not terminate beneath the mobile home and must not be connected to any other duct, vent or chim-

**Determine vent length**

1. Select the route that will provide the straightest and most direct path outdoors. Plan the installation to use the fewest number of elbows and turns. When using elbows or making turns, allow as much room as possible. Bend vent gradually to avoid kinking. Avoid 90° turns.

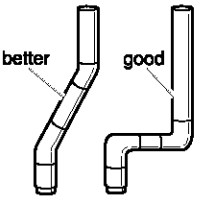


2. Determine vent length.
   The maximum length of the exhaust system depends upon:
   - The type of vent (rigid metal or flexible metal).
   - The number of elbows used.
   - Type of hood.

Recommended hood styles are shown here.

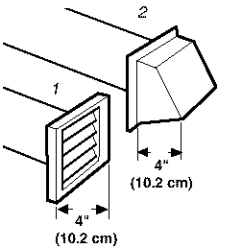


*1. Louvered hood style*
*2. Box hood style*

The angled hood style (shown following) is acceptable.

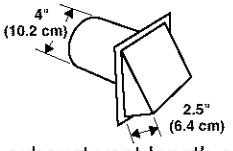


See the exhaust vent length chart that matches your hood type for the maximum vent lengths you can use.

Exhaust systems longer than specified will:

- Shorten the life of the dryer.
- Reduce performance, resulting in longer drying times and increased energy usage.

3. Determine the number of elbows you will need.
   **NOTE:** Do not use vent runs longer than specified in Vent Length Chart.

   The chart below helps you determine your maximum vent length based on the number of 90° turns or elbows you will need and the type of vent (rigid or flexible metal) and hood that you will use.

**Vent Length Chart**

| Number of 90° turns or elbows | Type of vent | Box or Louvered hoods | Angled hoods |
|---|---|---|---|
| 0 | Rigid metal | 64 ft (20 m) | 58 ft (17.7 m) |
| | Flexible metal | 36 ft (11 m) | 28 ft (8.5 m) |
| 1 | Rigid metal | 54 ft (16.5 m) | 48 ft (14.6 m) |
| | Flexible metal | 31 ft (9.4 m) | 23 ft (7 m) |
| 2 | Rigid metal | 44 ft (13.4 m) | 38 ft (11.6 m) |
| | Flexible metal | 27 ft (8.2 m) | 19 ft (5.8 m) |
| 3 | Rigid metal | 35 ft (10.7 m) | 29 ft (8.8 m) |
| | Flexible metal | 25 ft (7.6 m) | 17 ft (5.2 m) |
| 4 | Rigid metal | 27 ft (8.2 m) | 21 ft (6.4 m) |
| | Flexible metal | 23 ft (7 m) | 15 ft (4.6 m) |

## Install Vent System

1. (Optional) Put on safety glasses and gloves.
2. Install exhaust hood. Use caulking compound to seal exterior wall opening around exhaust hood.
3. Connect vent to exhaust hood. Vent must fit inside exhaust hood. Secure vent to exhaust hood with 4 in. (10.2 cm) clamp.
4. Run vent to dryer location. Use the straightest path possible. See "Determine Vent Length." Avoid 90° turns. Use duct tape to seal all joints.

## Install Leveling Legs

**⚠WARNING**

**Excessive Weight Hazard**
**Use two or more people to move and install dryer.**
**Failure to do so can result in back or other injury.**

1. Place two of the carton corner posts on the floor behind the back of the dryer. See illustration.
2. Firmly grasp the body of the dryer (not the top or console panel).

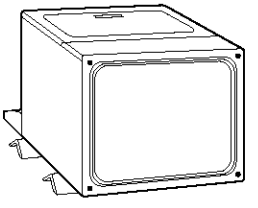

Gently lay the dryer on the cardboard corners.

3. Examine the leveling legs. Find the diamond marking.

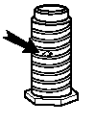

4. Screw the legs into the leg holes by hand. Use a wrench to finish turning the legs until the diamond marking is no longer visible.
5. Stand the dryer up. Move it close to its final location. Leave enough room to connect the exhaust vent.

ENGLISH

## Level Dryer

Check the levelness of the dryer. Check levelness first side-to-side, then front-to-back.

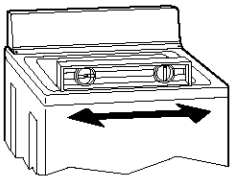

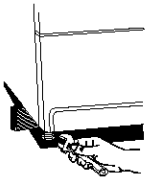

If the dryer is not level, prop up the dryer using a wood block. Use a wrench to adjust the legs up or down and check again for levelness.

**NOTE:** It might be necessary to level the dryer again after it is moved into its final position.

## Connect Vent

1. Using a 4 in. (10.2 cm) clamp, connect vent to exhaust outlet in dryer. If connecting to existing vent, make sure the vent is clean. The dryer vent must fit over the dryer exhaust outlet and inside the exhaust hood. Make sure the vent is secured to exhaust hood with a 4 in. (10.2 cm) clamp.
2. Move dryer into final position. Do not crush or kink vent. Make sure dryer is level.

## Complete Installation

1. Check to be sure all parts are now installed. If there is an extra part, go back through the steps to see which step was skipped.
2. Check to be sure you have all of your tools.
3. Dispose of all packaging materials.
4. Check the dryer's final location. Be sure the vent is not crushed or kinked.
5. Check to be sure the dryer is level. (See "Level Dryer.")
6. Plug into a grounded outlet. Turn power on.
7. Remove the blue protective film on the console and any tape remaining on the dryer.
8. Read "Dryer Use."
9. Wipe the dryer drum interior thoroughly with a damp cloth to remove any dust.
10. Set the dryer on a full heat cycle (not the Air cycle) for 20 minutes and start the dryer.
    **If the dryer will not start, check the following:**
    - Controls are set in a running or "On" position.
    - Start button has been pushed firmly.
    - Dryer is plugged into a grounded outlet.
    - Electrical supply is connected.
    - House fuse is intact and tight or circuit breaker has not tripped.
    - Dryer door is closed.
11. When the dryer has been running for 5 minutes, open the dryer door and feel for heat.
    **If you do not feel heat, turn the dryer off and check the following:**
    - There may be 2 fuses or circuit breakers for the dryer. Check to make sure both fuses are intact and tight, or that both circuit breakers have not tripped. If there is still no heat, contact a qualified technician.

    **NOTE:** You may notice a burning odor when the dryer is first heated. This odor is common when the heating element is first used. The odor will go away.

**⚠WARNING**

**Explosion Hazard**

**Keep flammable materials and vapors, such as gasoline, away from dryer.**

**Do not dry anything that has ever had anything flammable on it (even after washing).**

**Failure to follow these instructions can result in death, explosion, or fire.**

**⚠WARNING**

**Fire Hazard**

**No washer can completely remove oil.**

**Do not dry anything that has ever had any type of oil on it (including cooking oils).**

**Items containing foam, rubber, or plastic must be dried on a clothesline or by using an Air Cycle.**

**Failure to follow these instructions can result in death or fire.**

## STARTING YOUR DRYER

To get the best drying results, you must operate your dryer properly. This section gives you this important information.

**NOTE:** The drawings in this section show the basic features of all models covered by this manual. Refer to the supplied "Feature Sheet" for your dryer's particular features.

1. Clean lint screen.
2. Put laundry into dryer and shut door.
3. Set Cycle Selector Control (Timer) Ⓐ, (see "Cycle Descriptions").
4. Set FABRIC/TEMPERATURE Control Ⓑ, (see "Fabric/Temperature Control"). Check clothes label for manufacturer's recommendations.
5. Press PUSH TO START Button Ⓒ. Be sure door is closed.

## STOPPING/RESTARTING YOUR DRYER

- To stop the dryer at any time, open dryer door.
- To restart, press PUSH TO START Button. Be sure door is closed.
- If you wish to end your drying cycle, turn Cycle Selector Control (Timer) to OFF.

ENGLISH

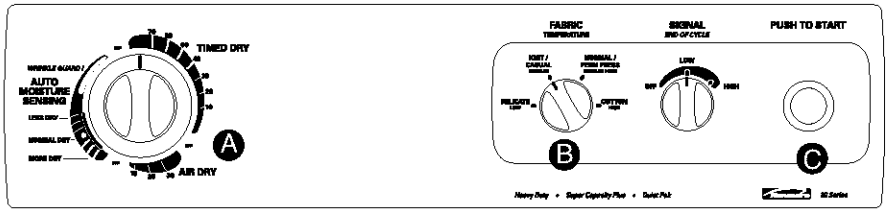

## CYCLE DESCRIPTIONS

**for your Benefit**

The automatic cycles save you time by providing the best drying results in the shortest time. This can help you save money on utility bills and reduce the risk of fabric damage.

**Using Automatic Drying Cycles**

- Set the Cycle Selector Control (Timer) to NORMAL DRY(*) which is good for most fabrics.
- At the end of the cycle, feel the dried clothes. If they are damp, select MORE DRY the next time you do a similar load. If they are overdried, select LESS DRY the next time you do a similar load.
- If your dryer has an End of Cycle Signal, it will sound (if selected) once the cycle is completed. Select models feature a non-adjustable End of Cycle Signal.
- If you do not unload the dryer at the end of an automatic cycle, WRINKLE GUARD® will start automatically, if available. See "Using WRINKLE GUARD®."

### AUTO DRY CYCLE

Use AUTO DRY for most loads. Drying time varies according to type of fabric, size of load, and dryness setting.

**On Dryers with AUTO DRY I**

- Dryness is determined by thermostats that react to the amount of moisture in the air exhausted from the dryer. Moist air indicates clothes are still damp. Dry air indicates that moisture has been removed.

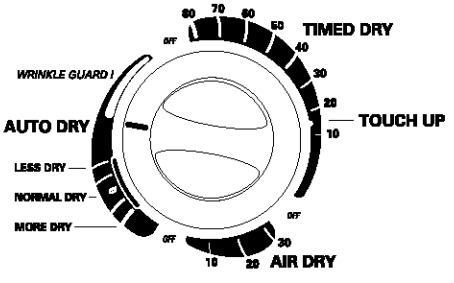


**NOTE:** Dryers that do not have a FABRIC/TEMPERATURE Control give you a choice of settings for High Heat or Low Heat on the Cycle Selector Control (Timer).

**On Dryers with AUTO MOISTURE SENSING**

- Dryness is determined by an electronic sensor that "feels" the amount of moisture in clothes as they pass over it. When the dryness selected is reached, the dryer goes into a 10-minute (approximately) Cool Down period.

### TIMED DRY CYCLE

Use this cycle to get to 60, 70, 80, or 90 minutes (depending on model) of heated drying time.

- The heating cycle is followed by a 10-minute (approximately) Cool Down period.
- If your dryer has an End of Cycle Signal, it will sound (if selected) once the cycle is completed. Select models feature a non-adjustable End of Cycle Signal.

### TOUCH UP CYCLE

Use this cycle to smooth synthetic and permanent press clothes that are clean but wrinkled from being crowded in a closet or suitcase.

- This setting provides about 15 minutes of heated drying time followed by a 10-minute (approximately) Cool Down period.
- If your dryer has an End of Cycle Signal, it will sound (if selected) once the cycle is completed. Select models feature a non-adjustable End of Cycle Signal.
- Remove clothes immediately when tumbling stops.

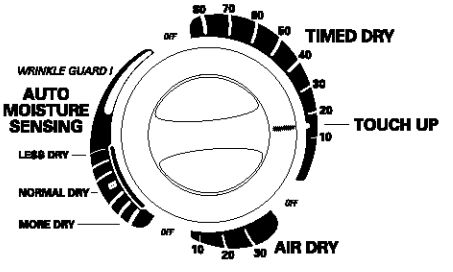

## FABRIC/TEMPERATURE CONTROL

**for your Benefit**

Proper use of this control helps ensure that fabrics are dried at the right temperature for maximum life.

Use this control to select the drying temperature that matches the fabrics in your load.

- Select LOW for delicate fabrics. Select HIGH for durable fabrics such as sturdy work clothes or bath towels.
- The FABRIC/TEMPERATURE Control will not work when the Cycle Selector Control (Timer) is in the Air Dry Cycle.

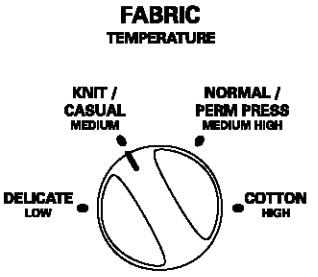


The following table lists suggested dryer settings and drying times for various loads. This is only a guide. Settings may require adjustment depending on the requirements of your load.

| Type of Load | AUTOMATIC Setting | Drying Temp | TIMED DRY Setting** |
|---|---|---|---|
| **COTTONS AND LINENS** | | | |
| Extra Heavy – Bedspreads, mattress pads, quilts | MORE DRY | HIGH | 70-80 min. |
| Heavyweight – Towels, jeans, corduroys, work clothes | MORE DRY | HIGH | 50-60 min. |
| Medium Weight – Sheets, cotton underwear, diapers | NORMAL DRY | MEDIUM/HIGH or MEDIUM* | 40-50 min. |
| Lightweight – Batistes, organdies, lingerie | NORMAL DRY | LOW | 30-40 min. |
| **PERMANENT PRESS, SYNTHETICS AND BLENDS** | | | |
| Heavyweight – Work clothes, jackets, raincoats | NORMAL DRY | HIGH | 40-50 min. |
| Medium Weight – Shirts, play clothes, sheets, slacks | NORMAL DRY | MEDIUM/HIGH or MEDIUM* | 30-40 min. |
| Lightweight – Lingerie, blouses, dresses | LESS DRY | MEDIUM or LOW* | 20-30 min. |
| **KNITS** | | | |
| Heavyweight – Cottons, rayons, blends, T-shirts, slacks, shirts | NORMAL DRY | HIGH | 40-50 min. |
| Medium Weight – Synthetics (polyester, acrylic, etc.), dress slacks, skirts, sweaters | NORMAL DRY | MEDIUM/HIGH or MEDIUM* | 30-40 min. |
| Lightweight – Synthetics (polyester, acrylic, etc.) and blends, lingerie, blouses, dresses | LESS DRY | LOW | 20-30 min. |

*Use the lowest temperature setting available on your dryer.
**Reset time, as needed, to allow items to dry completely.

ENGLISH

## USING AIR DRY/AIR FLUFF

**for your Benefit**

Using these cycles gives you all the benefits of hang drying with a shorter drying time.

Use the AIR DRY Cycle to get up to 30 minutes of drying time in room temperature air. Use this setting for items that will not tolerate heat such as plastics, rubber, and heat sensitive fabrics. Also use for airing and fluffing items such as pillows.

The AIR FLUFF Setting operates exactly like the AIR DRY Cycle. This setting is available on models that do not have an AIR DRY Cycle in the Cycle Selector Control (Timer).

**To use AIR FLUFF:**

- Set Cycle Selector Control for the number of minutes you want in the TIMED DRY Cycle.
- Set FABRIC/Temperature Control to AIR FLUFF.
- Set other options, press PUSH TO START Button.

Refer to the following chart for examples of items that require drying without heat. Use the AIR DRY Cycle or AIR FLUFF Setting (depending on model), or place the items on a line or rack to air dry.

**OR**

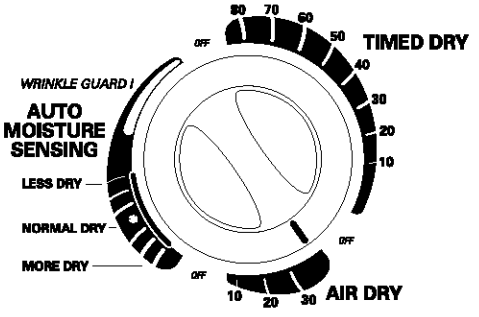


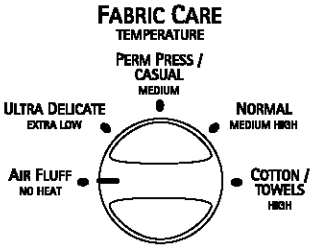


| Type of Load | AIR DRY Cycle/ AIR FLUFF Setting |
|---|---|
| **DELICATE FABRICS** | |
| Sheer curtains (2 or 3 panels), gauze, lace, etc. (Use AIR DRY/AIR FLUFF if low heat is not available.) | 20-30 min. |
| **RUBBER, PLASTIC, HEAT-SENSITIVE FABRICS** | |
| Foam rubber – Pillows, padded bras, stuffed toys<br>• Make sure coverings are securely stitched.<br>• Shake and fluff pillows by hand several times during the cycle.<br>• Make sure pillows are completely dry. Foam rubber pillows take a long time to dry.* | 20-30 min. |
| Plastic – Shower curtains, tablecloths | 20-30 min. |
| Rubber-backed rugs | 40-50 min. |
| Olefin, Polypropylene, Sheer nylon | 10-20 min. |

*Reset time, as needed, to allow these items to dry completely.

## END OF CYCLE SIGNAL CONTROL

**for your Benefit**

Your dryer sounds a signal when a drying cycle is finished.

The signal is helpful when you are drying permanent press, synthetics, and other items. These items should be removed from the dryer as soon as it stops in order to prevent wrinkles.

- On some models, the volume of the signal can be adjusted.

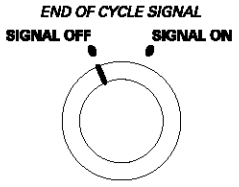


## PUSH TO START BUTTON

Use this control to start the dryer. Be sure the dryer door is closed.

Opening the door stops the dryer. It will not start again until you close the door and press the PUSH TO START Button. Be sure the Cycle Selector Control (Timer) is still on a dry setting.

## EVENHEAT™ WITH AUTO MOISTURE SENSING PLUS

**for your Benefit**

EVENHEAT™ with Auto Moisture Sensing Plus is the only system that uses 2 different sensors to "understand" how fast a load is drying and adjusts time and temperature for optimal fabric care.

This cycle uses 2 moisture-sensing strips in the back of the dryer. When the strips no longer "feel" any moisture in the clothes, the dryer automatically turns off to prevent overdrying and shrinking.

## COOL DOWN

Approximately 10 minutes before the end of the AUTO DRY, AUTO MOISTURE SENSING and TIMED DRY Cycles, clothes are tumbled without heat to help reduce wrinkles and make clothes more comfortable to handle.

## USING WRINKLE GUARD®

**for your Benefit**

WRINKLE GUARD® helps keep your permanent press items wrinkle free when you don't unload the dryer promptly at the end of the automatic cycle.

If you do not open the door at the end of the automatic cycle, WRINKLE GUARD® will tumble the clothes without heat.

- On dryers with WRINKLE GUARD® I, the dryer will tumble the clothes continuously for about 30 minutes unless you open the dryer door.
- On dryers with WRINKLE GUARD® III, periodic tumbling every 15 seconds will continue for about $2^1/_2$ hours unless you open the dryer door.
- WRINKLE GUARD® III has a selectable ON/OFF Option. When WRINKLE GUARD® III is set at OFF, the dryer stops after Cool Down and may be unloaded.

The End of Cycle Signal will sound after each period of tumbling, unless it is off.

**WRINKLE GUARD III**

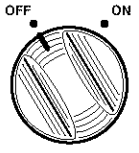


ENGLISH

## DRYER RACK

On some models, the dryer rack was shipped on top of your dryer. Remove and discard shipping blocks before using.

**for your Benefit**

Use the Dryer Rack for items that you do not want to tumble dry, such as sweaters. When you use the dryer rack, the heated air inside the dryer flows in a concentrated pattern to allow efficient and uniform drying. Use TIMED DRY to select the desired time.

**To use the dryer rack:**

1. Slide rear pegs into the dimples on the back wall of the dryer. Lower the front legs to rest on the dryer opening.

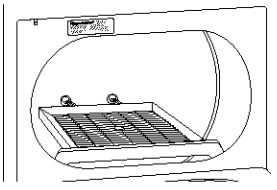

2. Put the wet items on top of the rack. Leave space between the items so air can reach all the surfaces. Close the door.

**NOTE:** Do not allow items to hang over the edge of the rack.

3. Select a timed drying cycle and tem perature, or an air cycle. Items containing foam, rubber, or plastic must be dried on a clothesline or by using an air cycle.

4. Push the START button.

**NOTE:** The rack must be removed for normal tumbling. Do not use the automatic cycle with the dryer rack.

This chart shows examples of items that can be rack-dried and the suggested cycle, temperature setting, and drying time. Actual drying time will depend on the amount of moisture items hold.

| Rack Dry | Cycle | Temp | Time |
|---|---|---|---|
| **Wool Sweaters**<br>Block to shape and lay flat on the rack | Timed | Low | 60 |
| **Stuffed toys or pillows**<br>Cotton or polyester fiber filled | Timed | Low | 60 |
| **Stuffed toys or pillows**<br>Foam rubber filled | Air<br>(no heat) | None | 90 |
| **Sneakers or canvas shoes** | Air<br>(no heat) | None | 90 |

*(Minutes). Reset cycle to complete drying, if needed.

# LAUNDRY TIPS

## PREPARING CLOTHES FOR DRYING

**for your Benefit**

Follow these recommendations to help save on your utility bills and prolong the life of your garments.

- Refer to your Washer Owner's Manual for proper washing techniques and additional laundry tips.

## DRYING TIPS

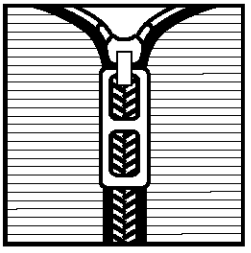

- Close zippers, snaps, and hooks to avoid snagging other items. Remove heat-sensitive trim that can be damaged by drying. Tie strings and sashes so they will not tangle.
- Check garments for spots and stains left after washing. Do not tumble these items. Heat may permanently set stains.
- Check pockets before drying. Sharp or metal objects can damage your dryer. Do not lay these objects on your dryer, they can damage the finish. Turn pockets of heavy items inside out for even drying.
- Place small items such as baby socks or hankies in laundry bag for easy removal.
- Articles to be ironed should be removed while still damp.

## SORTING CLOTHES

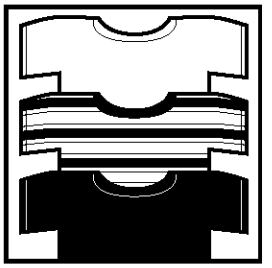

- Separate dark colors from light colors, colorfast from non-colorfast. Items properly sorted by color for washing are usually properly sorted for drying.
- Separate heavy fabrics (denim, towels) from light fabrics (synthetics, permanent press).
- Separate lint givers (towels, chenille) from lint takers (corduroy, synthetics, permanent press). When possible, turn lint takers inside out.

ENGLISH

## CHOOSING LOAD SIZES

- Mix large items with small items. Load the dryer by the amount of space items take up, not by their weight. Do not overload the dryer. Overcrowding causes uneven drying and wrinkling, and can cause items to wear out faster (because of pilling).
- You may need to rearrange large items (sheets, blankets, tablecloths) during a cycle to reduce balling or rolling up.
- For better tumbling action, when drying only a few small items, add one or two lint-free towels. This also prevents small lightweight items from blocking airflow.

| SUPER CAPACITY DRYERS | | |
|---|---|---|
| **Heavy Work Clothes** | **Towels** | **Mixed Load** |
| 4 jeans | 10 bath towels | 3 sheets (1 king, 2 twin) |
| 4 workpants | 10 hand towels | 4 pillowcases |
| 4 workshirts | 14 wash cloths | 3 shirts |
| 2 sweatshirts | | 3 blouses |
| 2 sweatpants | | 9 T-shirts |
| | | 9 shorts |
| | | 10 handkerchiefs |

## USING DRYER FABRIC SOFTENERS

Dryer fabric softeners are recommended for reducing static cling. Always follow package instructions carefully.

- Put one fabric softener sheet on top of the load before starting the dryer. Do not add a fabric softener sheet after the drying cycle has started. Instant heat can cause the fabric softener to spot fabrics.
- Remove fabric softener stains by wetting the stains and rubbing them with liquid detergent or bar soap and rewash.
- Some fabric softeners can clog the lint screen and slow drying. Use fabric softeners labeled as dryer safe.

## SAVING ENERGY

- Sort load by fabric weight and type.
- Use the preset cycle settings to dry most loads.
- Dry full loads when possible. Do not overdry.
- Avoid overloading dryer, adding wet items to a partly dried load, or opening the door unnecessarily.
- Shorten drying times by exhausting dryer properly and cleaning exhaust vent and outside exhaust hood as needed.
- Keep the lint screen clean.
- Use dryer where room air temperature is above 45°F (7°C).

## CLEANING YOUR DRYER

**for your Benefit**

Proper care of your dryer can extend its life and help you avoid costly service calls.

**⚠WARNING**

**Explosion Hazard**

**Use nonflammable cleaner.**

**Failure to do so can result in death, explosion, or fire.**

**To clean dryer drum:**

1. Make a paste with detergent and very warm water and apply to a soft cloth.
2. Scrub area until all excess dye is removed.
3. Wipe thoroughly with a damp cloth.
4. Tumble a load of clean towels for 20 minutes to dry.

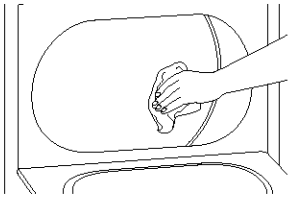

**NOTE:** Garments that contain unstable dyes, such as denim blue jeans or brightly colored cotton items, may discolor the drum interior. These stains are not harmful to your dryer and will not stain future loads of clothes. It is helpful to dry unstable dye items inside out to prevent dye transfer.

## CLEANING THE LINT SCREEN

### Remove Lint Before Every Load

The lint screen is located on top of your dryer. Remove lint before starting every load. A screen blocked by lint can increase drying time.

**To clean:**

1. Pull out lint screen.

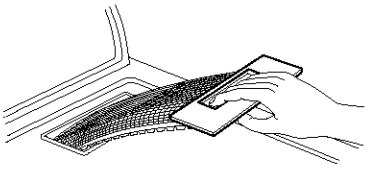

2. Roll lint off the screen with your fingers. Do not rinse or wash screen to remove lint. Wet lint is hard to remove.

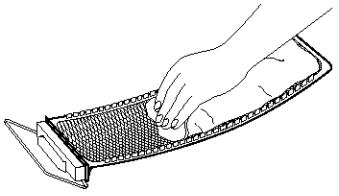

3. Push the lint screen firmly back into place.

**IMPORTANT:**

- Do not run the dryer with the lint screen loose, damaged, blocked, or missing. Doing so can cause overheating and damage to both the dryer and fabrics.
- Some towels made of synthetic fibers and natural fibers (polyester and cotton blends) may shed more lint than other towels, causing your dryer's lint screen to fill up faster. Be sure to remove lint from the lint screen before and after drying new towels.

### Wash Lint Screen As Needed

Laundry detergents and fabric softeners can cause a residue buildup on the lint screen. Wash the lint screen with a nylon brush if it becomes clogged due to a residue buildup.

**To wash:**

1. Wet both sides of lint screen with hot water.
2. Wet a nylon brush with hot water and liquid detergent; scrub lint screen with the brush to remove residue buildup.

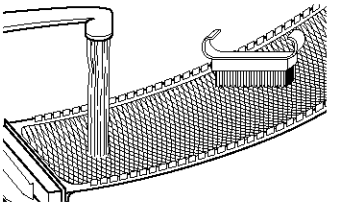

3. Rinse lint screen with hot water.
4. Thoroughly dry lint screen with a clean towel; replace in dryer.

## REMOVING ACCUMULATED LINT

### From Inside the Dryer Cabinet

Lint should be removed every 2 years, or more often, depending on dryer usage. Cleaning should be done by a qualified person.

### From the Exhaust Vent

Lint should be removed every 2 years, or more often, depending on dryer usage.

## MOVING CARE

- Disconnect power.
- Make sure leveling legs are secure in dryer base.
- Use masking tape to secure dryer door.

## VACATION CARE

- Disconnect power.
- Wash lint screen.

## TO CHANGE DRUM LIGHT

The dryer light automatically turns on inside the dryer drum when you open the door.

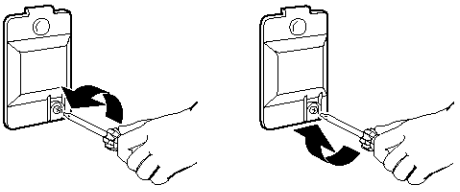

1. Unplug dryer or disconnect power.
2. Open the dryer door. Locate the light bulb cover on the back wall of the dryer. Remove the screw located in the lower right corner of the cover. Remove the cover.
3. Turn bulb couterclockwise. Replace the bulb with a 10-watt appliance bulb only. Replace the cover and secure with the screw.
4. Plug in dryer or reconnect power.

ENGLISH

# TROUBLESHOOTING

## *for your* Benefit

Most laundering problems are easily solved if you understand the cause. Using the tables below will save you time and money by helping you avoid unnecessary service calls.

| Problem | Possible Cause | Solution |
|---|---|---|
| **Not Drying Satisfactorily** | Lint screen is clogged with lint. | Clean lint screen. |
| | Restricted air movement. Exhaust vent or outside exhaust hood is clogged with lint. | Run dryer for 5-10 minutes. Hold hand under outside exhaust hood to check air movement. If you do not feel air moving, clean exhaust system of lint or replace exhaust vent with rigid metal or flexible metal vent (see "Installation Instructions"). |
| | Exhaust vent is crushed or kinked. | Replace with rigid metal or flexible metal vent (see "Installation Instructions"). |
| | One fuse is blown or circuit breaker is tripped. The dryer will appear to operate, but you will not get any heat. | Replace fuse or reset breaker. |
| | AIR DRY Cycle has been selected. | Select the right cycle for the types of garments being dried (see "Dryer Use"). |
| | Load not contacting the sensor strips and automatic cycle ending early. | Level dryer (see "Installation Instructions"). |
| | Fabric softener sheets blocking outlet grill. | Use only one softener sheet per load and only use it once. |
| | Dryer located in room with temperature below 45°F. | Proper operation of dryer cycles requires temperatures above 45°F (7°C). |
| | Large amount of moisture in the load. | Expect longer dry times with items that hold more moisture (cottons). |
| | Cold rinse water used. | Expect longer dry times, but you are saving energy and reducing wrinkles. |
| | Load too large and bulky to dry quickly. | Separate load to tumble freely. |

| Problem | Possible Cause | Solution |
|---|---|---|
| **Dryer Will Not Run** | Power cord not firmly plugged in. | Firmly plug in dryer. Use a new UL approved 30 amp power supply cord. |
| | Fuses blown or circuit breakers tripped. | Replace fuses or reset breakers. |
| | Using a regular fuse. | Replace with a time-delay fuse. |
| | Dryer door not firmly closed. | Close dryer door tightly. |
| | START pad not pressed. | Press START pad. |
| | Cycle not selected. | Select cycle and press START pad. |
| **Lint in Load** | Lint screen is clogged. | Clean lint screen. Check for air movement. |
| | Improper sorting. | Sort lint givers from lint takers and by color. |
| | Load is too big or heavy. | Dry smaller loads so lint can be carried to the lint screen. |
| | Load is overdried. | Use correct dryer settings for fabric. Overdrying can cause lint-attracting static (see "Dryer Use"). |
| | Paper or tissue in pockets. | Clean out pockets before drying. |
| | Pilling being mistaken for lint. | Pilling (surface fuzz) is caused by normal wear and laundering. |
| **Stains on Load** | Improper use of fabric softener in washer. | Use fabric softener sheets in dryer. Add at beginning of cycle when load is cold. |
| | Drying soiled items. | Items need to be clean before being dried. |
| **Items Shrinking** | Overdrying. | Match dryer settings to fabric type (see "Dryer Use"). |
| | Poor garment quality. | Check quality of garment before purchasing. |
| | Manufacturer's care label instructions not followed. | Follow fabric care label instructions carefully. |
| **Loads are Wrinkled** | Overloading. | Dry smaller loads that can tumble freely. |
| | Overdrying. | Match dryer settings to fabric type (see "Dryer Use"). |
| | Load left in dryer at the end of cycle. | Remove load as soon as tumbling stops. |
| **Odors** | Have you recently been painting, staining, or varnishing in the area where you dryer is located? | If so, ventilate the area. When the odors or fumes are gone from the area, re-wash and dry clothing. |
| | First use of dryer element. | Odor will be gone after the first cycle. |
| **Unusual Sound** | Thumping of rollers when dryer has had a period of non-use. | Thump will go away after 5 minutes of drying. |

## WE SERVICE WHAT WE SELL

Your purchase has added value because you can depend on Sears HomeCentral® for service. With over 12,000 trained repair specialists and access to over 4.2 million parts and accessories, we have the tools, parts, knowledge and skills to ensure our pledge: We Service What We Sell.

**Sears Maintenance Agreements**

Your Kenmore appliance is designed, manufactured and tested to provide years of dependable operation. Yet any major appliance may require service from time to time. The Sears Maintenance Agreement offers you an outstanding service program, affordably priced.

**Sears Maintenance Agreements**

- Is your way to buy tomorrow's service at today's prices.
- Eliminates repair bills resulting from normal wear and tear.
- Provides for non-technical and instructional assistance.
- Even if you don't need repairs, provides an annual Preventive Maintenance Check, at your request, to ensure that your appliance is in proper running condition.

**Some limitations apply. For more information, call 1-800-827-6655.**

# Get it fixed, at your home or ours!

For repair of major brand appliances **In your own home…**
no matter who made it, no matter who sold it!

**1-800-4-MY-HOME®** Anytime, day or night
**(1-800-469-4663)** (U.S.A. and Canada)

**www.sears.com** **www.sears.ca**

For repair of carry-in products like vacuums, lawn equipment, and electronics, call for the location of your nearest **Sears Parts and Repair Center.**

**1-800-488-1222** Anytime, day or night (U.S.A. only)

**www.sears.com**

For the replacement parts, accessories and owner's manuals that you need to do-it-yourself, call **Sears PartsDirect℠!**

**1-800-366-PART** 6 a.m. – 11 p.m. CST, 7 days a week
**(1-800-366-7278)** (U.S.A. only)

**www.sears.com/partsdirect**

To purchase or inquire about a Sears Service Agreement or Sears Maintenance Agreement:

**1-800-827-6655** (U.S.A.)
7 a.m. – 5 p.m. CST, Mon. – Sat.

**1-800-361-6665** (Canada)
9 a.m. – 8 p.m. EST, M – F, 4 p.m. Sat.

Para pedir servicio de reparación a domicilio, y para ordenar piezas:
**1-888-SU-HOGAR℠**
(1-888-784-6427)

Au Canada pour service en français:
**1-800-LE-FOYER**MC
(1-800-533-6937)
www.sears.ca

SEARS
HomeCentral®