SELECTRONIC GAS GRIDDLE

Commercial

224S, 224SC, 224SHE, 224SCHG
236S, 236SC 236SCHG, 236SHE, 236SHG
248S, 248SHE, 248SHG, 260S, 272S

Installation and Operation Instructions

2M-W360 REV P (01-25)

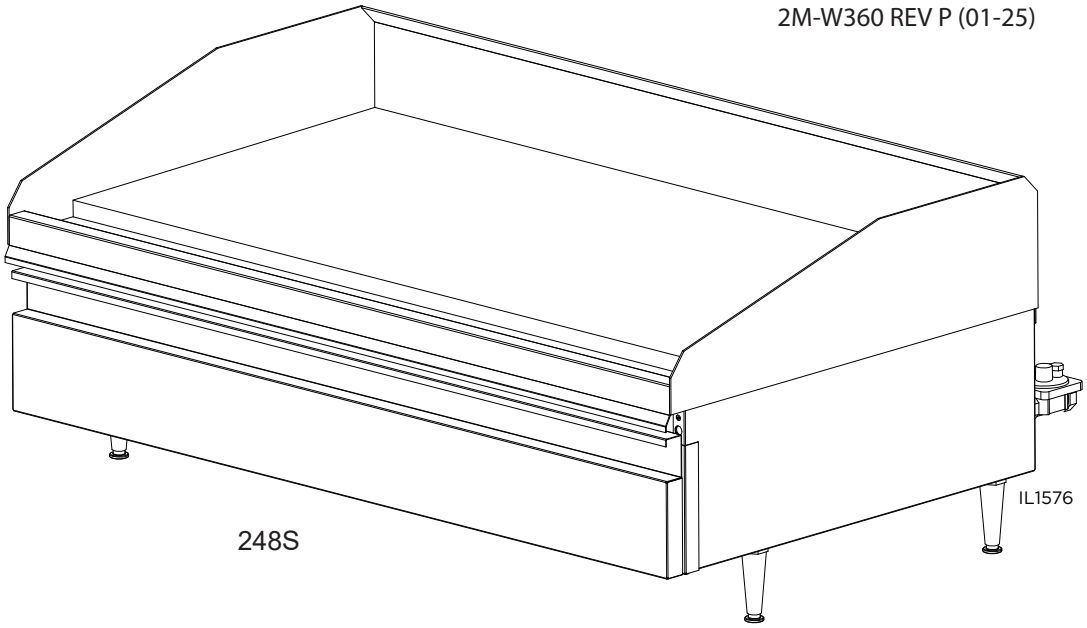

248S

SAFETY SYMBOL

These symbols are intended to alert the user to the presence of important operating and maintenance instructions in the manual accompanying the appliance.

FOR YOUR SAFTEY

DO NOT STORE OR USE GASOLINE OR OTHER FLAMMABLE VAPORS AND LIQUIDS IN THE VICINTIY OF THIS OR ANY OTHER APPLIANCE.

The installation of the Appliance must conform to the NATIONAL FUEL GAS CODE "ANSI Z223.1 - LATEST EDITION" AND ALL LOCAL GAS COMPANY RULES AND REGULATIONS.

IN CANADA INSTALLATION SHALL BE IN ACCORDANCE WITH THE CURRENT CAN/CGA-B149.1 NATURAL GAS INSTALLATION CODE OR CAN/CGA-B149.2 PROPANE INSTALLATION CODE AND LOCAL CODES WHERE APPLICABLE.

POST IN PROMINENT LOCATION

INSTRUCTIONS TO BE FOLLOWED IN THE EVENT USER SMELLS GAS. THIS INFORMATION SHALL BE OBTAINED BY CONSULTING YOUR LOCAL GAS SUPPLIER. AS A MINIMUM, TURN OFF THE GAS AND CALL YOUR GAS COMPANY AND YOUR AUTHORIZED SERVICE AGENT. EVACUATE ALL PERSONNEL FROM THE AREA.

WARNING

IMPROPER INSTALLATION, ADJUSTMENT, ALTERATION, SERVICE OR MAINTENANCE CAN CAUSE PROPERTY DAMAGE, INJURY OR DEATH. READ THE INSTALLATION, OPERATION & MAINTENANCE INSTRUCTIONS THOROUGHLY BEFORE INSTALLING OR SERVICING THIS EQUIPMENT.

WARNING

RISK OF FIRE OR ELECTRIC SHOCK
DO NOT OPEN

WARNING, TO REDUCE THE RISK OF ELECTRICAL SHOCK, DO NOT REMOVE CONTROL PANEL. NO USER-SERVICABLE PARTS INSIDE.
REPAIRS SHOULD BE DONE BY AUTHORIZED SERVICE PERSONNEL ONLY.

NOTICE

Using any part other than genuine Lang factory supplied parts relieves the manufacturer of all liability.

Lang reserves the right to change specifications and product design without notice. Such revisions do not entitle the buyer to corresponding changes, improvements, additions or replacements for previously purchased equipment.

Due to periodic changes in designs, methods, procedures, policies and regulations, the specifications contained in this sheet are subject to change without notice. While Lang Manufacturing exercises good faith efforts to provide information that is accurate, we are not responsible for errors or omissions in information provided or conclusions reached as a result of using the specifications. By using the information provided, the user assumes all risks in connection with such use.

MAINTENANCE AND REPAIRS

Contact your local dealer for service or required maintenance. Please record the model number, serial number, voltage and purchase & Installation Information in the area below and have it ready when you call to ensure a faster service.

Model No.: _____ Purchased From: _____

Serial No.: _____ Location: _____

Voltage: _____ Purchase Date: _____

1-Phase or 3 Phase: _____ Installed Date: _____

PROBLEMS, QUESTIONS or CONCERNS

Before you proceed consult you authorized Lang service agent directory
or
Call the Lang Technical Service & Parts Department at 800-264-7827

TABLE OF CONTENTS

Specifications . . . . . 4 - 5
Equipment Description 6
Unpacking 7
Installation
- Ventilation & Clearance 7
- Electrical & Gas Connection. 8

Initial Start-Up
- Initial Lighting Procedure 9
- Seasoning Cooking Surface. 9

Operation
- Setting the Griddle Temperature 10
- Suggested Times and Temperatures 10
- Loading the Griddle 11

Sequence of Operation
- Power On 12

Maintenance
- Daily Cleaning 13
- Weekly Cleaning 13
- Burner Air Shutter Adjustment. 13

Troubleshooting
- Symptoms / Possible Causes 14
- Possible Causes / Test 15

Wiring Diagram 16
Exploded View & Parts List 20-26
Warranty 27

NOTICE **Service on this or any other Lang appliance must be performed by qualified personnel only. Consult your Lang Authorized Service Agent Directory. You can call our tech service number 800-264-7827 or visit our website WWW.LANGWORLD.COM for the service agent nearest you.**

EQUIPMENT SPECIFICATIONS

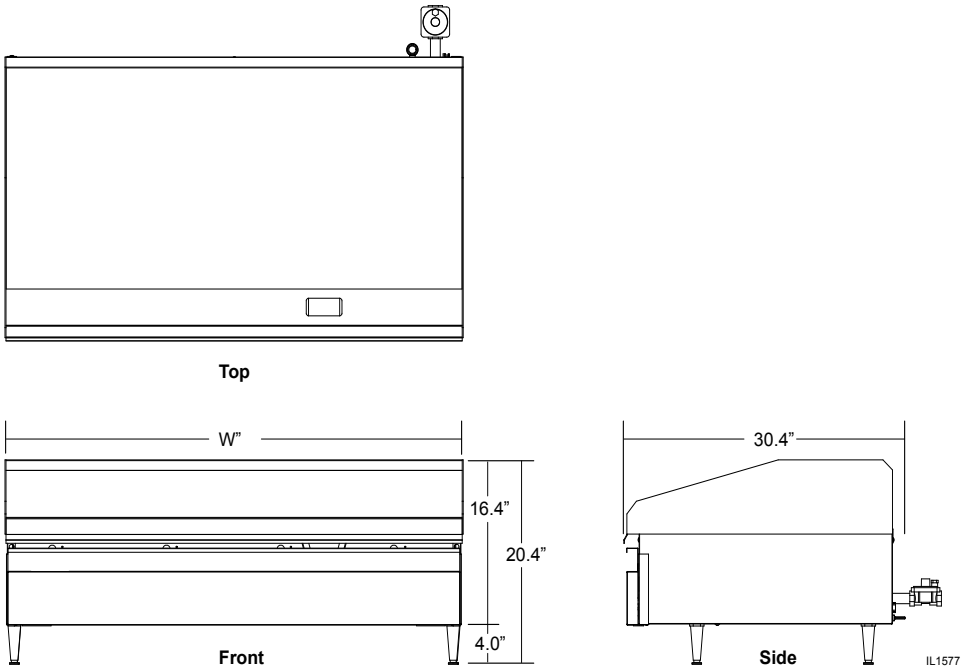

Model	Height x Width x Depth (Not including legs)	Clearance from combustible surface	Weight		Freight Class
			Actual	Shipping	
224S	16.4” x 24.1” x 30.4” 418mm x 613mm x 773mm	Sides: 5” Back: 5”	243 lbs. 110 kg	280 lbs. 127 kg	65
236S	16.4” x 36.1” x 30.4” 418mm x 917mm x 773mm		368 lbs. 167 kg	420 lbs. 191 kg	
248S	16.4” x 48.1” x 30.4” 418mm x 1222mm x 773mm		448 lbs. 204 kg	520 lbs. 236 kg	
260S	16.4” x 60.1” x 30.4” 418mm x 1527mm x 773mm		556 lbs. 253 kg	635 lbs. 289 kg	
272S	16.4” x 72.1” x 30.4” 418mm x 1832mm x 773mm		689 lbs. 313 kg	800 lbs. 364 kg	

EQUIPMENT SPECIFICATIONS

SPECIFICATIONS										
Current Model	Gas Requirements						Electrical Requirements			
	NAT.Gas	LP. Gas	Burner Input	Manifold Press.	Gas Connection (3/4" NPT)		Voltage	Total kW	Phase	Amps /Line
224S-NAT	X		27,000	5 WC	1	50,000 BTU/hr	115V/60Hz	0.5	1	2.0
224SC-NAT	X			5 WC						
224SHE-NAT	X			5 WC						
224SR-LP		X		10 WC			240V/60Hz	0.25		1.0
224SR-NAT	X			5 WC			115V/60Hz	0.5		2.0
236SC-NAT	X			5 WC		81,000 BTU/hr				
236SCHG-NAT	X			5 WC						
236SHE-NAT	X			5 WC						
236SHG-NAT	X			5 WC						
236S-LP		X		10 WC						
236S-NAT	X			5 WC						
248SHG-NAT	X			5 WC		108,000 BTU/hr				
248SHG-LP		X		10 WC						
248SHE-NAT	X			5 WC						
248S-LP		X		10 WC						
248S-NAT	X			5 WC						
248S-NATSC	X			5 WC						
248SR-LP		X		10 WC			240V/60Hz	0.25		1.0
248SR-NAT	X			5 WC			115V/60Hz	0.5		2.0
260S-LP		X		10 WC		135,000 BTU/hr				
260S-NAT	X			5 WC						
260SC-NAT	X			5 WC						
260S-NATSC	X			5 WC						
260SCHE-NAT	X			5 WC						
272S-LP		X		10 WC	2	162,000 BTU/hr				
272S-NAT	X			5 WC						
272S-NATSC	X			5 WC						
272SB-NAT	X			5 WC						
272SHE-NAT	X			5 WC						
272SHG-NAT	X			5 WC						

EQUIPMENT DESCRIPTION

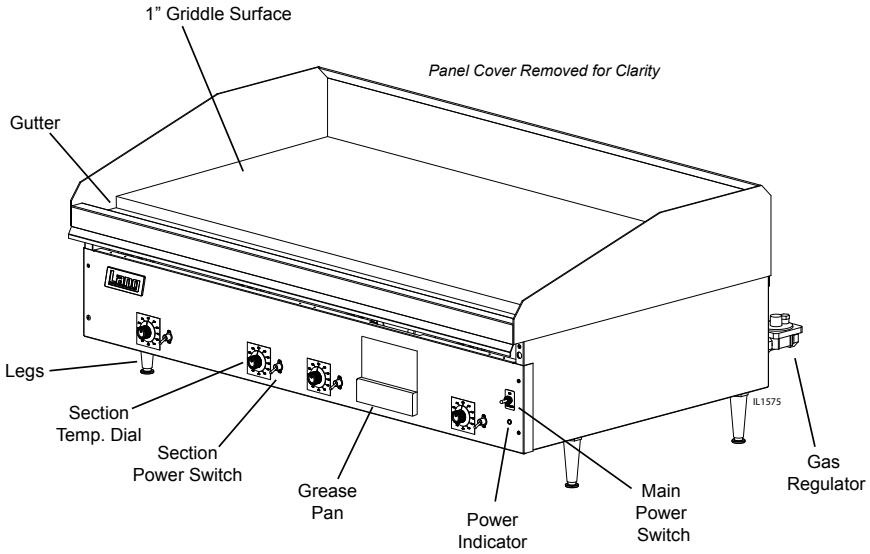

Exterior Construction

The griddle dimensions are 17” (43.18cm) High, 30” (76.20cm) Deep, and width is dependent on the actual model number.

The Sides, Bottom, and Rear wall are constructed of double wall stainless steel, which allows closer installation to combustible surfaces.

The stainless steel drop-down door keeps the controls cool and control area clean.

The griddle surface is made of 1” thick, highly polished steel to reduce hot and cold spots, recovery problems, warping, and ensure even heat to the edges of the griddle.

Controls

The Selectronic Griddle comes with the solid state controls which include:

- A Main Power Switch & Power Indicator for the entire unit.
- Each twelve-inch section has its own temperature selector switch that snaps into place to lock in any temperature from 175°F to 450°F (79°C to 232°C) in 25° increments.
- Each twelve-inch section of the griddle is controlled by an area sensitive RTD probe, which can sense and react to a temperature change of +/- 4°F.

Technical

- Griddle operates on either Natural gas or Propane. This must be specified when ordering. It is shipped with a Power Cord and Plug attached.
- Floor space required is 30” (76.20cm) Deep, and width is 2 ft, 3ft, 4ft, 5ft, or 6ft depending on actual model number.
- The griddle weighs 260, 390, 520, 650, 780 lbs. depending on actual model number.

Griddle Gas and Voltage Specifications

The Lang Model can be connected to any 120 Volt source. The gas and electrical specifications are listed in the table on the previous page.

NOTICE **The data plate is on the right side of the griddle. The oven voltage, wattage, serial number, wire size, and clearance specifications are on the data plate. This information should be carefully read and understood before proceeding with the installation.**

UNPACKING

Receiving the Griddle

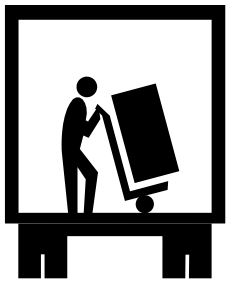

Upon receipt, check for freight damage, both visible and concealed. Visible damage should be noted on the freight bill at the time of delivery and signed by the carrier's agent. Concealed loss or damage means it does not become apparent until the merchandise has been unpacked. If concealed loss or damage is discovered upon unpacking, make a written request for inspection by the carrier's agent within 15 days of delivery. All packing material should be kept for inspection. **Do not return damaged merchandise to Star Manufacturing Company. File your claim with the carrier.**

Location

Prior to un-crating, move the oven as near to its intended location as practical. The crating will help protect the unit from the physical damage normally associated with moving it through hallways and doorways.

Un-crating

The griddle will arrive completely assembled inside a wood frame and strapped to a skid. Cut the straps and remove the wood frame.

The oven can now be removed from the skid.

CAUTION

THE UNIT IS EXTREMELY HEAVY. FOR SAFE HANDLING, INSTALLER SHOULD OBTAIN HELP AS NEEDED, OR EMPLOY APPROPRIATE MATERIALS HANDLING EQUIPMENT (SUCH AS A FORKLIFT, DOLLY, OR PALLET JACK) TO REMOVE THE UNIT FROM THE SKID AND MOVE IT TO THE PLACE OF INSTALLATION.

ANY STAND, COUNTER OR OTHER DEVICE ON WHICH OVEN WILL BE LOCATED MUST BE DESIGNED TO SUPPORT THE WEIGHT OF THE GRIDDLE.

SHIPPING STRAPS ARE UNDER TENSION AND CAN SNAP BACK WHEN CUT.

VENTILATION & CLEARANCE

CLEARANCE

For use on non-combustible countertops only.
Combustible and non-combustible material must be at least 48" (120cm) from the top of the appliance and 5" (150mm) from the sides and back. Adequate clearance should also be provided for proper operation and servicing.

AIR SUPPLY

Make certain not to obstruct the fl ow of combustion and ventilation air. Provisions for adequate air supply must be furnished. The legs supplied with the unit must be installed. Make certain that air intake openings in the bottom of the appliance are not obstructed. They are essential for proper combustion and operation of the appliance.

EXHAUST CANOPY

It is essential that facilities be provided over the griddle to carry off fumes and gases. However, the unit should not be directly connected to a flue or stack.

INSTALLATION

Electrical Connection

The 120V griddles are supplied with a cord and plug, 240V units are not. The 120V receptacle is not provided with the griddle.

Follow the receptacle manufacturer's instructions when connecting the receptacle to the power supply.

Gas Connection

This griddle is manufactured for use with the type of gas indicted on the nameplate.
Contact the factory if your type of gas does not match the nameplate data.

All gas connectors must be in accordance with local codes and comply with the National Fuel Federal Gas Codes ANSI Z223.1 latest edition.

This appliance should be installed with a separate gas valve in the gas line ahead of the unit. Use a 3/4 inch or larger gas supply line.

Remove the 5/16 inch nuts securing the rear of burners. These nuts are for securing the main burners during transportation only. The rear burner shield must be removed to gain access to the nuts.

A pressure regulator for the type of gas specified is supplied with each appliance.

This regulator must be installed in the gas supply line. (Note the direction of the gas flow arrow.) The pressure in the manifold of the appliance should be tested with a manometer and the regulator adjusted for proper pressure with the appliance operating at full fire. A 1/8 inch NPT tap is provided in the manifold for connecting a manometer.

Correct manifold pressures are:

5 inches water column for natural gas
10 inches water column for propane

When replacing the plug in the manifold, a pipe joint compound or sealant should be used that is resistant to the action of liquid petroleum gas.

Initial adjustments are the responsibility of the installer and are not chargeable to Star Manufacturing International.

After the griddle is in its final position, adjust the legs to create 1/8 inch slant from back to front. This will allow the grease to run into the grease gutter and provide the proper combustion air for the burners.

DANGER: **THIS APPLIANCE MUST BE GROUNDED AT THE TERMINAL PROVIDED. FAILURE TO GROUND THE APPLIANCE COULD RESULT IN ELECTROCUTION AND DEATH.**

WARNING **INSTALLATION OF THE UNIT MUST BE DONE BY PERSONNEL QUALIFIED TO WORK WITH ELECTRICITY AND PLUMBING. IMPROPER INSTALLATION CAN CAUSE INJURY TO PERSONNEL AND/OR DAMAGE TO EQUIPMENT. UNIT MUST BE INSTALLED IN ACCORDANCE WITH ALL APPLICABLE CODES.**

NOTICE: **The data plate is located inside the control compartment of each griddle. The griddle voltage, serial number, gas specifications, and clearance specifications are on the data plate. This information should be carefully read and understood before proceeding with the installation.**

NOTICE: **The installation of any components such as a vent hood, grease extractors, fire extinguisher systems, must conform to their applicable National, State and locally recognized installation standards.**

INITIAL START UP

Initial Lighting Procedure

Clean the preservative coating from the griddle plate and splash guard. Add a mild detergent to hot water and wash the griddle plate and splash guard. Rinse with a damp sponge and dry with a clean rag.

WARNING: BEFORE LIGHTING, USE A SOAP AND WATER SOLUTION TO TEST ALL JOINTS FOR GAS LEAKS.

- Plug the unit into a power supply that matches what is listed on the nameplate.
- Turn the ON-STANDBY toggle switch to ON.
- Set the temperature dials to the desired temperature.
- Turn the toggle switch to each section to ON.
- To turn the griddle off, simply turn the main toggle switch to STANDBY.

Seasoning the Griddle Plate (non chrome only)

- Set the temperature dials to 300°F (148°C).
- Observe the burners through the opening at the top of the control panel.
- When the burners go OFF, apply a thin coat of high-grade, non-salted vegetable oil to the griddle surface.
- Rub the oil into the griddle surface with the flat side of a spatula or a towel.
- Recoat any dry spots that appear then wait two minutes and wipe off any excess oil.
- Repeat the seasoning process at 350°F (176°C) and at 400°F (204°C).

NOTICE: During the first few hours of operation you may notice a small amount of smoke coming off the griddle, and a faint odor from the smoke. This is normal for a new griddle and will disappear after the first few hours of use.

Setting the Griddle Temperature

The suggested time and temperature chart (below) is provided as a guide for the products listed only.

If different temperature settings are to be used, select one side of the griddle and operate at the lowest temperature. Adjoining sections should be set at progressively higher temperatures.
Do not try to operate the end sections hot and the center sections cool.

CAUTION

ALWAYS KEEP THE AREA NEAR THE APPLIANCE FREE FROM COMBUSTIBLE MATERIALS.

KEEP FLOOR IN FRONT OF EQUIPMENT CLEAN AND DRY. IF SPILLS OCCUR, CLEAN IMMEDIATELY, TO AVOID THE DANGER OF SLIPS OR FALLS.

SUGGESTED TIMES AND TEMPERATURES		
PRODUCTS	TEMPERATURE (F / C)	TIME (MIN)
HAMBURGER	350°F (176°C)	
2 patties per LB		6 to 8
4 patties per LB		4 to 6
6 patties per LB		3 to 4
STEAKS		
1/2 to 3/4 inch thick, cooked medium	375°F (190°C)	5 to 7
3/4 to 1 inch thick, cooked medium		8 to 10
Lamb Chops	350°F (176°C)	6 to 8
Pork Chops		6 to 8
Salmon		6 to 8
Halibut	325°F (162°C)	6 to 8
Snapper		6 to 8
Hashbrown Potatoes	375°F (190°C)	3 to 4
Bacon	350°F (176°C)	3 to 4
Sausage Links or Patties		3 to 4
Ham (Pre-cooked)	375°F (190°C)	2
Eggs	275°F (135°C)	2 to 4
Note: The times and temperatures in this chart are intended as a general guide and starting point. Your actual times and temperatures may vary from this chart.		

Loading the Griddle

An understanding of how the griddle sections are controlled will be a valuable aid in loading your griddle.

Each 12 inch section of your griddle is independently controlled. The temperature control sensor is mounted under the griddle plate in the center of each cooking section.

If the product is loaded directly over the temperature sensor, that section will turn on and the burner will heat the entire cooking section. If the product is loaded to the side, front or back of the temperature sensor, the thermostat will react to the temperature change much slowly.

During slow periods with minimal loads, do not load directly over the thermostat sensors as this will unnecessarily turn the burners on and overheat the remainder of the section not being utilized.

Turn the product and continue cooking until it has reached its desired degree of doneness.

Remove the product from the griddle.

When reloading the griddle, first use the griddle surface on which a previous load was not placed. This will insure you the proper griddle temperature.

SEQUENCE OF OPERATION

Power On

When the griddle is connected to 115 Volt power, the spark module for each section starts sparking. While they are sparking the solenoid valve for the pilot burners are energized.

When the individual pilot burners ignite, and the pilot flame is verified, the spark module will stop sparking. Note: The pilot burners will remain lit until the griddle is removed from power or the gas is shut off.

When the main switch is turned on, 24 Volts is applied to the temperature control circuit.

When one of the individual section's switch is turned on, it provides power to the circuit board for that section.

The operator can now set the temperature of that section by selecting it on the temperature dial.

When the temperature on the dial is set higher than the temperature of the griddle section the circuit board will generate a "Heat call". This call (24 VAC Signal) goes to the solenoid valve opening the valve. The pilot burner ignites the main burner.

As the griddle section temperature increases the temperature sense probe resistance increases.

When the griddle section reaches the temperature set on the selector switch, the circuit board which monitors the probe resistance will turn off the heat call and there by close the gas valve.

When the griddle temperature drops below the set temperature the circuit board generates a new heat call and the sequence repeats.

MAINTENANCE & CLEANING

Griddle Care (Chromium Surfaces)

It takes very little time and effort to keep this Industrial Chromium griddle surface sparkling clean and performing at top efficiency. DO NOT allow grease to accumulate as it will carbonize and become difficult to remove. To prevent this condition the following cleaning suggestions should be followed:

1. Remove excess grease and food regularly with a 4" (100mm) wide Razor Sharp type scraper and wipe surface with a damp cloth if desired.
2. Following the scraping, for end of the day cleaning, a damp cloth and a non-silicated, nonabrasive, non-chlorinated cleaner such as Bon-Ami may be used to wipe surface clean, followed by wiping with a clean wet cloth.
3. Follow steps 2 and 3 from Griddle Care (Non-Chromium Surfaces) above.

CAUTION

1. **Never** use pumice, griddle stones, or abrasives on a chromium surface.
2. **Never** strike a chromium griddle surface with a sharp instrument or spatula edge.
3. **Never** use steel wool.
4. **Never** use commercial liquid grill cleaner on the griddle surface.
5. **Abusing** surface voids the warranty.

CHROME GRIDDLE SURFACE LIMITED WARRANTY EXCLUSIONS

Your Chrome griddle has been designed to give you many years of cooking reliability and requires minimum maintenance to keep the chrome surface in its original condition. All Chrome griddle surfaces are warranted for a period of 5 years against manufacturing defects to the original owner from the date of installation. This limited warranty is void if it is determined by Lang Manufacturing or one of its authorized representatives that the chrome surface has been misused or abused or subjected to the following situations:

1. Improperly installed.
2. Incorrect voltage applied to Chrome units allowing the surface to overheat and discolor.
3. The misuse of any instrument or tool which scratches or makes indentations in the surface which could cause the surface to peel, flake, or chip off.
4. The use of any chemical or abrasive cleaning solution, griddle brick, stone, screen or other cleaning products which could damage and affect the performance of the chrome surface.
5. The neglect of daily routine maintenance to the chromium surface.

Daily Cleaning (Non chrome only)

- Empty the grease drawer daily or whenever it is 3/4 full. It is easily removed for washing.
- Keep the griddle surface clean. After each cooking load, scrape the griddle surface to remove any carbonized grease.
- Once a day or when necessary the non chrome griddle surface should be thoroughly cleaned and seasoned again. Use a griddle stone, griddle pad, or liquid cleaner. Rub with the grain of the metal, being careful not to scrape the splash guard.
- Chrome griddle surfaces can be scraped with a 4” wide Razor Sharp scrapper and wipe surface with a damp cloth.
- Following the scraping, a damp cloth and non-silicated, non-abrasive, non-chlorinated cleaner such as Bon-Ami may be used to wipe surface clean, followed by wiping with a clean wet cloth.

Weekly Cleaning (Non chrome only)

- A mild detergent with water or one of the many commercial cleaners may be used.
- Be sure to rinse thoroughly and coat the griddle with a thin film of oil to prevent rusting, non-chrome surfaces only.
- Clean the exterior of the appliance with hot water and a mild detergent to maintain a gleaming appearance.
- Re-season the griddle plate after each cleaning, non-chrome surfaces only.

Burner Air Shutter Adjustment

- The air shutters are pre-set at the factory. However, minor adjustments may be required in the field to accommodate differences in gas and elevation.
- To adjust the air shutters, loosen the set screw holding the air damper to the burner near the gas inlet.
- Adjust the air mixture until the burner flame just flickers on the burner. “Lift-off” or yellow flame indicates improper shutter adjustment.
- Periodically inspect and clean the air shutters to insure complete combustion.

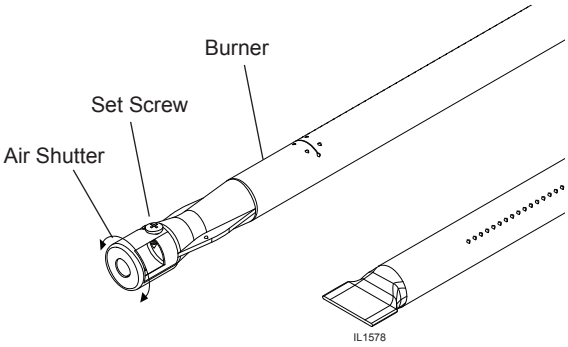

WARNING **KEEP WATER AND SOLUTIONS OUT OF CONTROLS. NEVER SPRAY OR HOSE CONTROL CONSOLE, ELECTRICAL CONNECTIONS, ETC.**

CAUTION **MOST CLEANERS ARE HARMFUL TO THE SKIN, EYES, MUCOUS MEMBRANES AND CLOTHING. PRECAUTIONS SHOULD BE TAKEN TO WEAR RUBBER GLOVES, GOGGLES OR FACE SHIELD AND PROTECTIVE CLOTHING. CAREFULLY READ THE WARNING AND FOLLOW THE DIRECTIONS ON THE LABEL OF THE CLEANER TO BE USED.**

NOTICE: **Never leave a chlorine sanitizer in contact with stainless steel surfaces longer than 10 minutes. Longer contact can cause corrosion.**

TROUBLESHOOTING

Symptoms

The chart below is to assist in the troubleshooting of the griddle.

Refer to the Symptoms column to locate the type of failure then to the Possible Cause for the items to be checked.

To test for a possible cause, refer to the TEST section (on the following page) and locate the Possible Cause then refer to test to identify test procedures.

SYMPTOM	POSSIBLE CAUSE
Entire griddle not lighting	• Failed regulator or plugged regulator vent • Failed transformer
Power indicator is not lit	• No power to cord outlet • Griddle unplugged from outlet • Failed power cord or plug • Failed power switch • Failed pilot light
Section will not heat	• Failed gas valve • Failed spark module • Failed circuit board • Failed temperature sensor • Plugged pilot orifice
Product burning	• Product is cooked too long • Failed temperature sensor • Failed circuit board • Failed temperature selector • Open wire between selector and circuit board
Product under done	• Failed temperature sensor • Failed circuit board • Failed temperature selector • Incorrect Gas pressure
Doesn’t ignite	• Failed igniter • Improper gas pressure • No power • Failed spark module

TESTS

POSSIBLE CAUSE	TEST
Failed Regulator	• Replace regulator
Failed transformer	• Check transformer for correct voltage, replace as necessary
Failed power cord or plug	• Check cord and plug for proper voltage
Failed power switch	• Check switch for continuity across poles
Failed pilot light	• Check for continuity across pilot light leads
Failed gas valve	• Remove the wires from the valve terminals and check for continuity across the coil
Failed igniter	• Replace as necessary
Failed spark module	• Check for correct incoming voltage at module
Failed circuit board	• Check for proper voltage and operation
Failed temperature sensor	• Ohm sensor for correct resistance
Failed temperature selector	• Remove the wires and check the resistance on all settings
Open wire between selector and circuit board	• Replace as necessary
Incorrect gas pressure	• Adjust to correct pressure
Plugged regulator vent, or orifice	• Clean as necessary

NOTICE: **Service on this, or any other, LANG appliance must be performed by qualified personnel only. Consult your LANG authorized service agent directory or call the factory at (314) 678-6315, or WWW.LANGWORLD.COM For the service agent nearest you.**

WARNING **BOTH HIGH AND LOW VOLTAGES ARE PRESENT INSIDE THIS APPLIANCE WHEN THE UNIT IS PLUGGED/WIRED INTO A LIVE RECEPTACLE. BEFORE REPLACING ANY PARTS, DISCONNECT THE UNIT FROM THE ELECTRIC POWER SUPPLY.**

CAUTION **USE OF ANY REPLACEMENT PARTS OTHER THAN THOSE SUPPLIED BY LANG OR THEIR AUTHORIZED DISTRIBUTORS CAN CAUSE BODILY INJURY TO THE OPERATOR AND DAMAGE TO THE EQUIPMENT AND WILL VOID ALL WARRANTIES.**

STAR MANUFACTURING INTERNATIONAL INC. # 10 SUNNEN DRIVE ST. LOUIS, MO. 63143, USA	MATERIAL	MODEL NO.	PART NO. 2M-61122-W11
	FINISH	TITLE Wire Diagram - Selectronic Gas Griddles	
	DR: ADAMS CK: DATE: 3/4/13		
THIS DRAWING CONTAINS INFORMATION CONFIDENTIAL TO STAR MFG. INT'L INC. NO REPRODUCTION OR DISCLOSURE OF ITS CONTENTS IS PERMITTED	TOLERANCE: UNLESS NOTED FRACTIONS ±3/64 DECIMALS , .x ± .030, .xx ± .015, .xxx ± .005	REVISIONS	

REV.	DATE/ECO	DESCRIPTION OF CHANGE	DR
A	7/3/2013 ECO 12993	ADDED RELAY TERMINAL DESIGNATIONS AND RELAY WIRING NOTE	JRA

NOTES:

1. THE BROWN WIRES ATTACHED TO THE RELAYS ARE ARE CONNECTED TO THE "NO" AND "COM" TERMINALS.

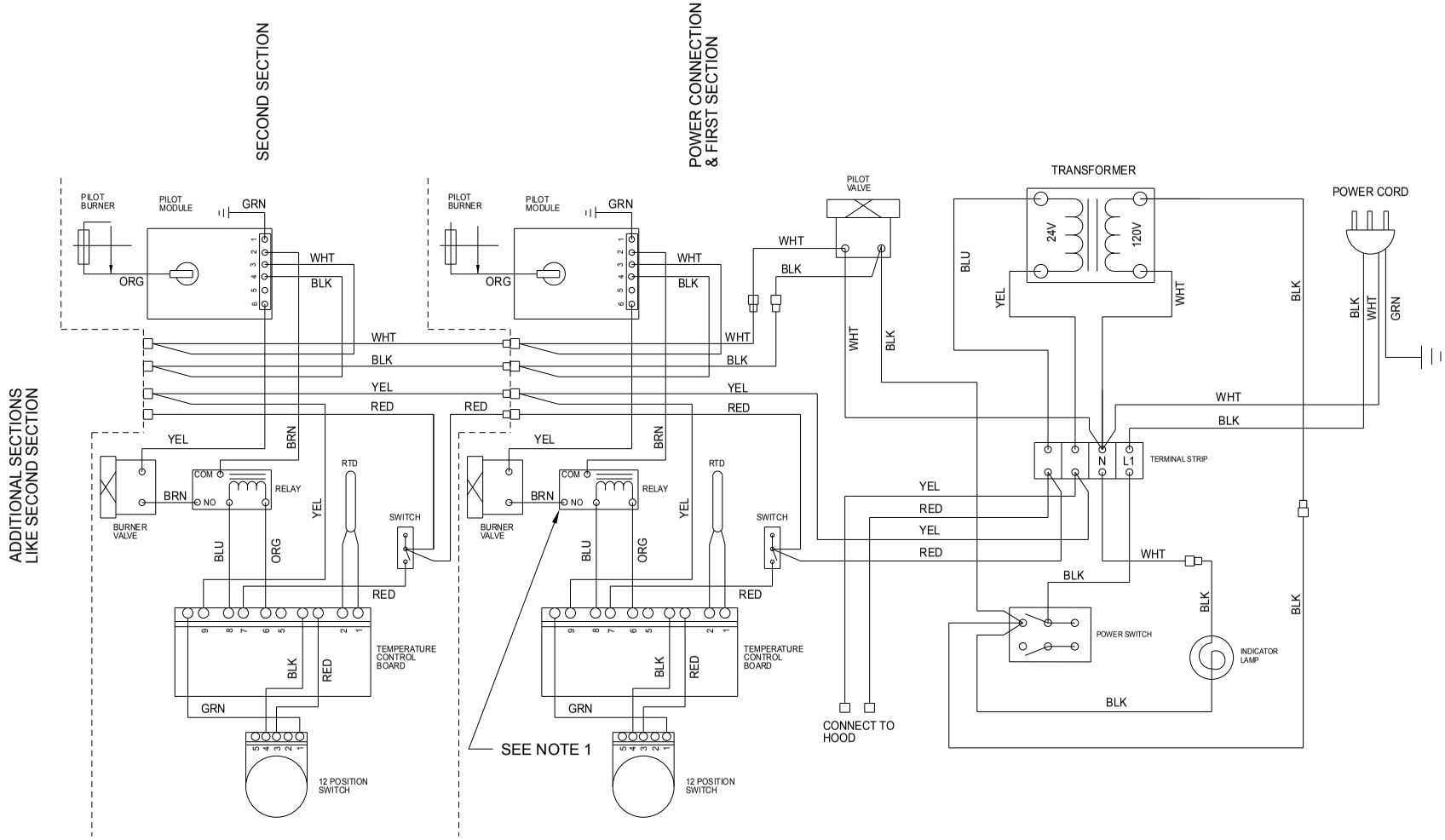

STAR MANUFACTURING INTERNATIONAL INC. # 10 SUNNEN DRIVE ST. LOUIS, MO. 63143, USA	MATERIAL	MODEL NO.	PART NO. 2M-61122-W38
	FINISH	TITLE W/D SELECTRONIC 36" GAS GRIDDLE WITH CSG24 CLAMSHELL	
	DR: DJS / CK. / DATE :12/19/2007		
THIS DRAWING CONTAINS INFORMATION CONFIDENTIAL TO STAR MFG. INT'L INC. NO REPRODUCTION OR DISCLOSURE OF ITS CONTENTS IS PERMITTED	TOLERANCE: UNLESS NOTED: .xxx ± .015 ANGLES ± 1°	REVISIONS	

REV.	DATE/ECO	DESCRIPTION OF CHANGE	DR
B	7/3/2013 ECO 12993	ADDED RELAY TERMINAL DESIGNATIONS AND RELAY WIRING NOTE	JRA
C	7/22/2013 ECO 13035	CHANGED CONNECTION OF HOOD WIRES 3 & 4 FROM TRANSFORMER TO POWER SWITCH	JRA

NOTES:

1. THE BROWN WIRES ATTACHED TO THE RELAYS ARE ARE CONNECTED TO THE "NO" AND "COM" TERMINALS.

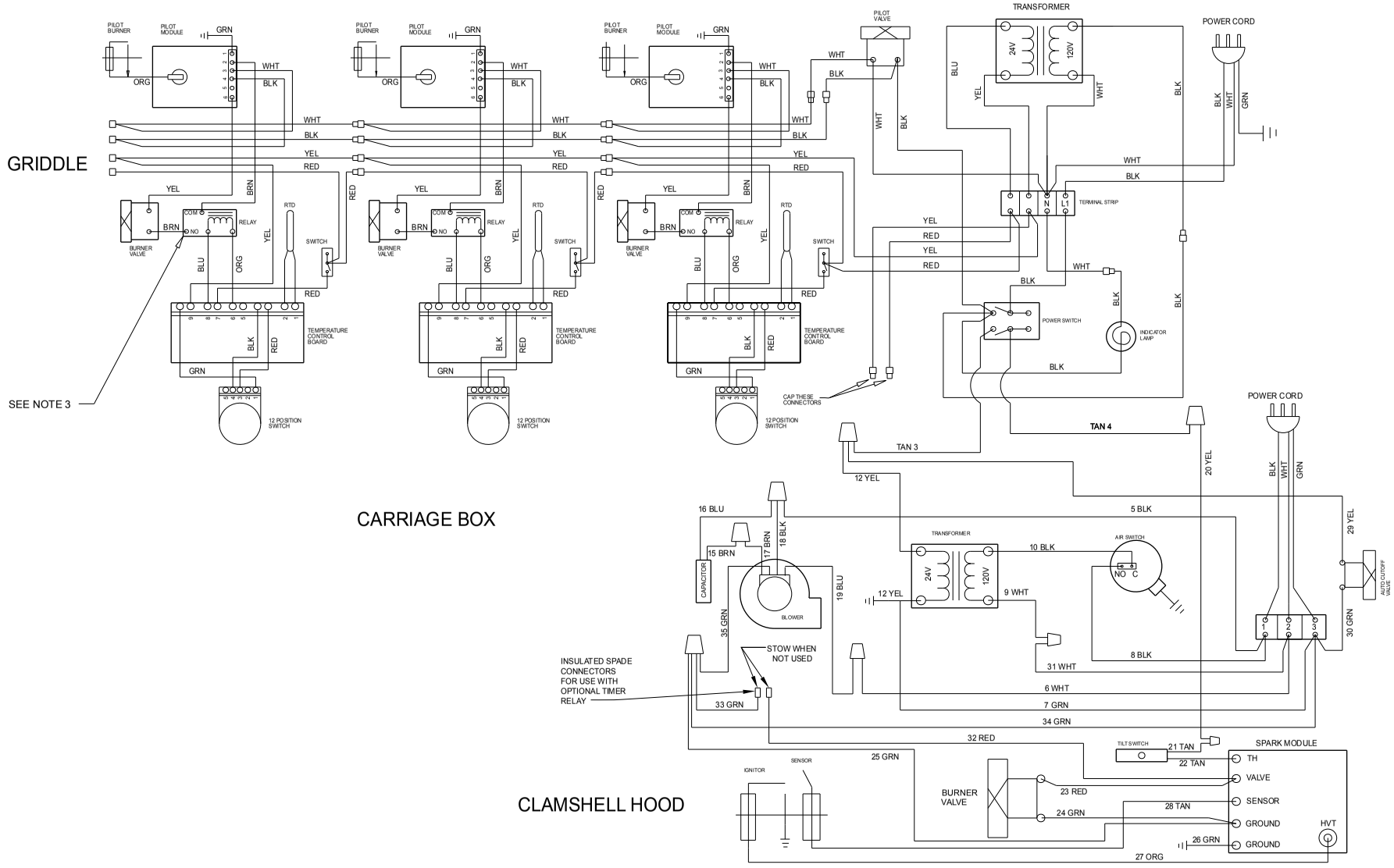

STAR MANUFACTURING INTERNATIONAL INC. # 10 SUNNEN DRIVE ST. LOUIS, MO. 63143, USA	MATERIAL	MODEL NO.	PART NO. 2M-61122-W11-1
	FINISH	TITLE Wire Diagram - Selectronic Gas Griddles	
	DR: ADAMS CK: DATE: 9/23/14		
THIS DRAWING CONTAINS INFORMATION CONFIDENTIAL TO STAR MFG. INT'L INC. NO REPRODUCTION OR DISCLOSURE OF ITS CONTENTS IS PERMITTED	TOLERANCE: UNLESS NOTED FRACTIONS ±3/64 DECIMALS , .x ± .030, .xx ± .015, .xxx ± .005	REVISIONS	

REV.	DATE/ECO	DESCRIPTION OF CHANGE	DR

NOTES:

1. THE BROWN WIRES ATTACHED TO THE RELAYS ARE ARE CONNECTED TO THE "NO" AND "COM" TERMINALS.

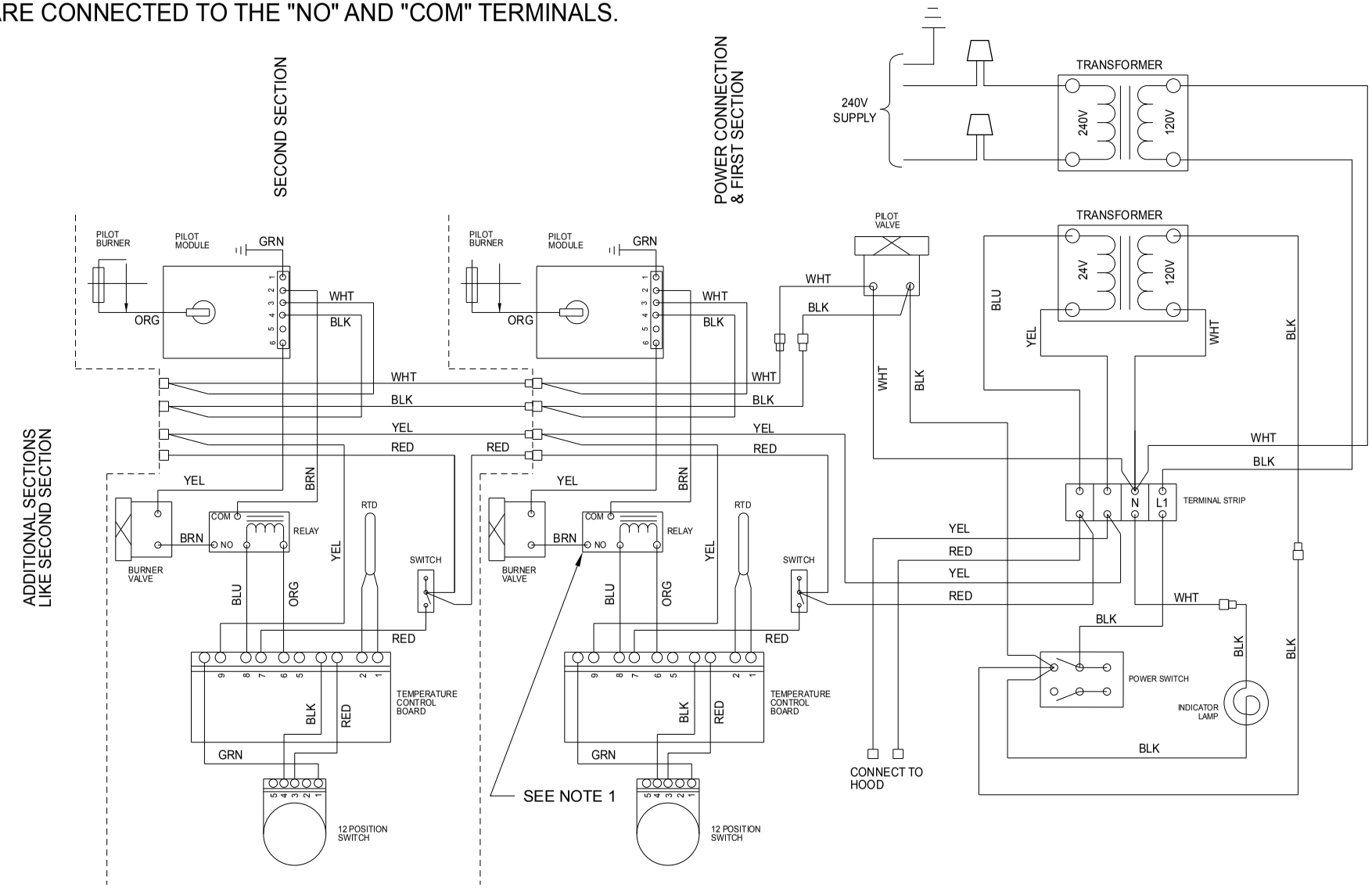

2M-W360: GAS SELECTRONIC GRIDDLE

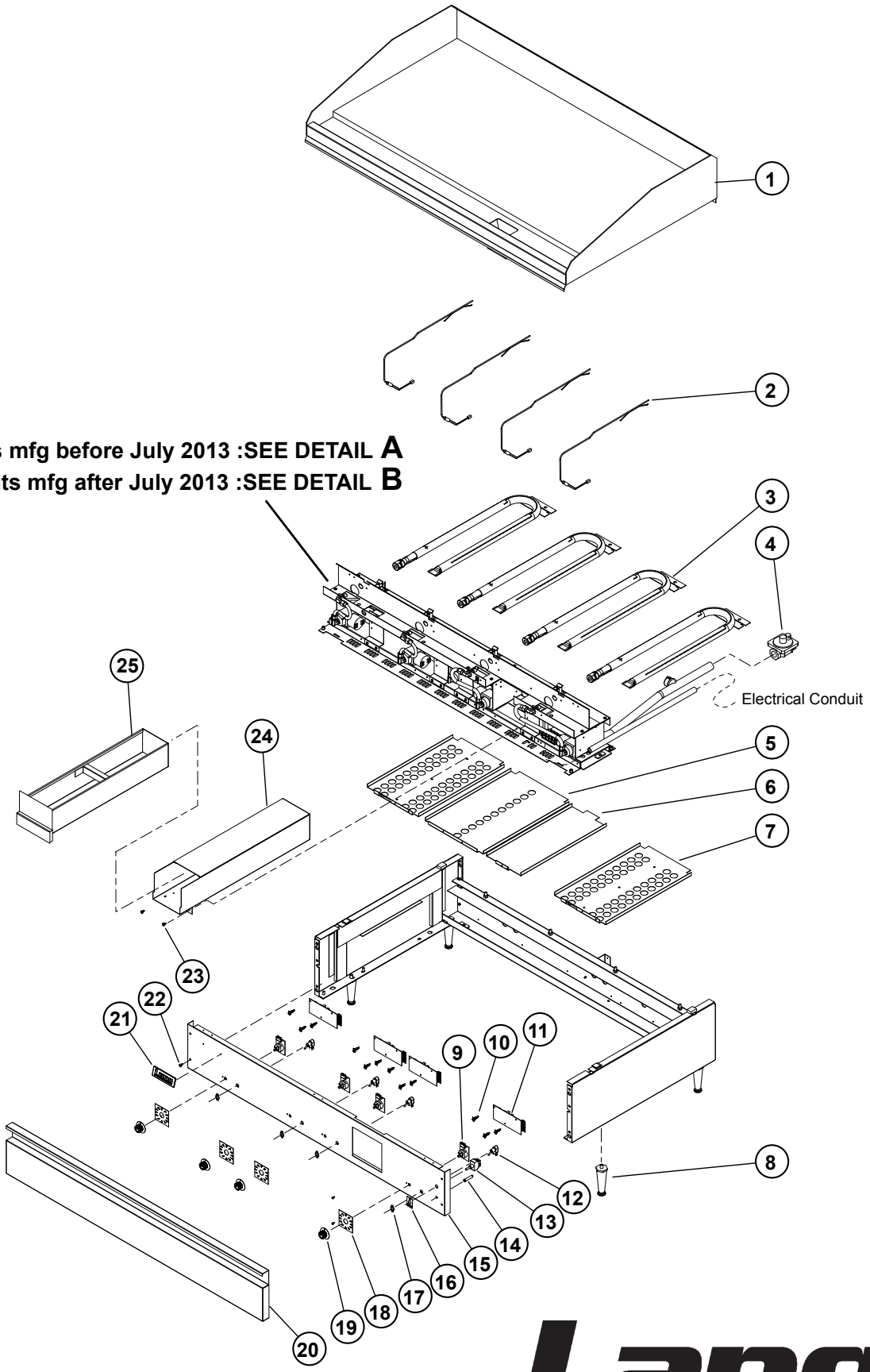

2M-W360: GAS SELECTRONIC GRIDDLE

Model: 224S thru 272S GAS SELECTRONIC GRIDDLE

SK2404 Rev. A 7/18/13

PARTS LIST

March 3, 2015, Rev. J

Model No: 224S-NAT
Selectronic Electric Griddle

Key Number	Part Number	Qty Per	Description	
1	K9-EZG-462-1	1	PLATE ASY 2' SEL .5 GRV	224S
	K9-EZG-462-02	1	PLATE ASY 2'SEL W/XLH-12	224SHE
	K9-EZG-462-60	1	PLATE ASY-2' SEL GRV CHROME	224SC
	K9-EZG-462-W61	1	PLT ASSY 2' SEL CHR	224SCHG
	K9-EZGR-487-21	1	PLATE ASSY 2' SEL EZGR RR	224SR
2	K9-41100-24	2	PROBE - ELECTRONIC #1517	224S, 224SR
3	K9-EZG-232-01	2	WELD BURNER #42	224S
4	2V-80501-04	1	GAS REG 3/4X3/4 CLS I	224S
6	K9-EZG-397	1	CENTER BURNER BAFFLE D	224S
7	K9-EZG-400	1	END BURNER BAFFLE	224S
8	2A-Z0314	4	FOOT, 4" DIE CAST	224S
9	2E-30304-22	2	SWTCB175-450oFW/41100-13	224S
10	2K-70801-07	6	SPACER SUPPORT 1/2LG	224S
11	2E-40101-19	2	CIRBD SI TEMP CNTRL NO	224S
12	2E-30303-18	2	SWTTOGON-OFFSPST1/4HP125V	224S
13	2E-30303-06	1	SWT TOG ON-ON DPDT BLK	224S
14	SY9-31601-09-1	1	PILOT LAMP 120V BLACK	224S
15	K9-EZG-W597	1	CONTROL PANEL ASSY	224S
	K9-EZGR-W597	1	CONTROL PANEL 2' SEL REAR	224SR
16	2M-60301-131	1	LABEL - ON / STAND BY	224S
17	2E-30303-05	2	SWT PLATE ON/OFF	224S
18	2M-60301-29	2	PNLLBL SELCT SWTDIAL 450o	224S
19	2R-70701-28	2	KNB BLK 1/4BUSH2SETSCW@90	224S
20	K9-60102-144	1	CONTROL PANEL COVER 2'	224S
21	2M-60301-43	1	DIE CAST PLT LANG SATIN	224S
	K9-60301-43-1	1	DIE CAST LOG + TINNERMAN	224S
23	2C-20103-02	AR	SCRW SM PLT 10 X .5 PHLSL	224S
24	K9-EZG-349	1	GREASE DRAWER SLIDE 2'	224S
	K9-EZGR-352	1	SPOTWELD BUCKET SLIDE	224SR
25	K9-EZG-343	1	GREASE DRAWER ASSY 2'	224S
	K9-EZGR-338	1	SPOT GREASE DRAWER	224SR
NI	2C-9788	3	MAGNETIC CATCH W/STRIKE	224S
NI	2E-31107-02	1	CORD SET 14/3 X 8' 15A	224S
NI	2E-EZG-712	2	HARNESS, SELECTRONIC	224S
NI	2K-70308-01	1	PIPE PLUG REG 1/8 NPT BLK	224S
NI	2M-60301-27	1	PNL LBL SLECTRONIC 4' G4E	224S
NI	2P-50100-15	1	GRIDDLE SCRAPER 12"	CROME UNITS
NI	2P-50100-15-1	-	RE-FILL REPLACEMENTS	CROME UNITS
NI	2P-50100-16	1	BOM AMI CLEANER	CROME UNITS
NI	2P-50100-17	1	20" PALMYRA BRUSH	CROME UNITS

IMPORTANT: WHEN ORDERING, SPECIFY VOLTAGE OR TYPE GAS DESIRED
INCLUDE MODEL AND SERIAL NUMBER

Some items are included for illustrative purposes only and in certain instances may not be available.

Lang

PARTS LIST

March 3, 2015, Rev. J

Model No: 236S-LP, 236S-NAT, 236SC-NAT 236SCHG-NAT, 236SHE-NAT, 236SHG-NAT
Selectronic Gas Griddle

Key Number	Part Number	Qty Per	Description	
1	K9-EZG-464-1	1	PLATE ASY 3' SEL .5 GRV	236S
	K9-EZG-464-01	1	PLATE ASY 3' SEL .5 GRV	236SHG
	K9-EZG-464-61	1	PLATE ASY 3' SEL .5 GRV	236SCHG
	K9-EZG-464-02	1	PLATE ASY 3' SEL W/XLH-12	236SHE
	K9-EZGR-487-301	1	PLATE ASY 3' SEL REAR GUTTER CHROME	236SRC
	K9-EZGR-487-32	1	PLATE ASY 3' SEL REAR GUTTER	236SR
2	K9-41100-24	3	PROBE - ELECTRONIC #1517	ALL
3	K9-EZG-232-01	3	WELD BURNER #42	ALL
4	2V-80501-04	1	GAS REG 3/4X3/4 CLS I	236S-NAT
	2V-80501-05	1	GAS REG 3/4X3/4 CLS II	236S-LP
6	K9-EZG-391	1	CENTER BURNER BAFFLE B	ALL
7	K9-EZG-400	2	END BURNER BAFFLE	ALL
8	2A-Z0314	4	FOOT, 4" DIE CAST	ALL
9	2E-30304-22	3	SWTCB175-450oFW/41100-13	ALL
10	2K-70801-07	9	SPACER SUPPORT 1/2LG	ALL
11	2E-40101-W19	3	CIRBD SI TEMP CNTRL NO	ALL
12	2E-30303-18	3	SWTTOGON-OFFSPST1/4HP125V	ALL
13	2E-30303-06	1	SWT TOG ON-ON DPDT BLK	ALL
14	SY9-31601-09-1	1	PILOT LAMP 120V BLACK	ALL
15	K9-EZG-600	1	SPOT CNTRL PNL 3' SEL	ALL
16	2M-60301-131	1	LABEL - ON / STAND BY	ALL
17	2E-30303-05	3	SWT PLATE ON/OFF	ALL
18	2M-60301-29	3	PNLLBL SELCT SWTDIAL 450o	ALL
19	2R-70701-28	3	KNB BLK 1/4BUSH2SETSCW@90	ALL
20	K9-60102-42	1	CONTROL PANEL COVER 3'	ALL
21	2M-60301-43	1	DIE CAST PLT LANG SATIN	ALL
21	K9-60301-43-1	1	DIE CAST LOG + TINNERMAN	ALL
23	2C-20103-02	AR	SCRW SM PLT 10 X .5 PHLSL	ALL
24	K9-EZG-355	1	GREASE DRAWER SLIDE	ALL
25	K9-50303-11	1	GREASE DRAWER ASSY	ALL
NI	2C-9788	3	MAGNETIC CATCH W/STRIKE	ALL
NI	2E-31107-02	1	CORD SET 14/3 X 8' 15A	ALL
NI	2E-EZG-712	3	HARNESS, SELECTRONIC	ALL
NI	2K-70308-01	1	PIPE PLUG REG 1/8 NPT BLK	ALL
NI	2M-60301-27	1	PNL LBL SLECTRONIC 4' G4E	ALL
NI	2P-50100-15	1	GRIDDLE SCRAPER 12"	CROME UNITS
NI	2P-50100-15-1	-	RE-FILL REPLACEMENTS	CROME UNITS
NI	2P-50100-16	1	BOM AMI CLEANER	CROME UNITS
NI	2P-50100-17	1	20" PALMYRA BRUSH	CROME UNITS

IMPORTANT: WHEN ORDERING, SPECIFY VOLTAGE OR TYPE GAS DESIRED
INCLUDE MODEL AND SERIAL NUMBER

Some items are included for illustrative purposes only and in certain instances may not be available.

PARTS LIST

March 3, 2015, Rev. J

Model No: 248S-LP, 248S-NAT, 248S-NATSC, 248SHG-NAT, 248SHE-NAT
Selectronic Gas Griddle

Key Number	Part Number	Qty Per	Description	
1	K9-EZG-467-01	1	PLATE ASY 4'SEL .5 GRV	248SHG-NAT
	K9-EZG-467-02	1	PLATE ASY 4'SEL .5 GRV W/XLH12	248SHE-NAT
	K9-EZG-467-1	1	PLATE ASY 4'SEL .5 GRV	248S-NAT/NATSC/LP
	K9-EZG-467-61	1	PLATE ASY 4' SEL CHROME	248SCHG-NAT
	K9-EZG-467-W1	1	PLATE ASY 4' SEL CHROME	248SC
	K9-EZGR-487-42	1	PLATE ASY 4' SEL REAR	248SR
2	K9-41100-24	4	PROBE - ELECTRONIC #1517	248S
3	K9-EZG-232-01	4	WELD BURNER #42	248S
4	2V-80501-04	1	GAS REG 3/4X3/4 CLS I	248S-NAT
	2V-80501-05	1	GAS REG 3/4X3/4 CLS II	248S-LP, 248SHG-LP
5	K9-EZG-388	1	CENTER BURNER BAFFLE A	248S
6	K9-EZG-391	1	CENTER BURNER BAFFLE B	248S
7	K9-EZG-400	2	END BURNER BAFFLE	248S
8	2A-Z0314	4	FOOT, 4" DIE CAST	248S
9	2E-30304-22	4	SWTCB175-450oFW/41100-13	248S
10	2K-70801-07	12	SPACER SUPPORT 1/2LG	248S
11	2E-40101-19	4	CIRBD SI TEMP CNTRL NO	248S
12	2E-30303-18	4	SWTTOGON-OFFSPST1/4HP125V	248S
13	2E-30303-06	1	SWT TOG ON-ON DPDT BLK	248S
14	SY9-31601-09-1	1	PILOT LAMP 120V BLACK	248S
15	K9-EZG-W603	1	SPOT CNTRL PNL 4' SEL	248S
	K9-EZGR-W605	1	SPOT CNTRL PNL 4' SEL	248SR
16	2M-60301-131	1	LABEL - ON / STAND BY	248S
17	2E-30303-05	4	SWT PLATE ON/OFF	248S
18	2M-60301-29	4	PNLLBL SELCT SWTDIAL 450o	248S
19	2R-70701-28	4	KNB BLK 1/4BUSH2SETSCW@90	248S
20	K9-60102-122	1	PANEL COVER ASSY 4FT EZG	248S-NAT/LP
21	2M-60301-43	1	DIE CAST PLT LANG SATIN	248S
	K9-60301-43-1	1	DIE CAST LOG + TINNERMAN	248S
23	2C-20103-02	50	SCRW SM PLT 10 X .5 PHLSL	248S
24	K9-EZG-355	1	GREASE DRAWER SLIDE	248S
25	K9-50303-11	1	GREASE DRAWER ASSY	248S-NAT/LP
	K9-EZG-977	1	GREASE DRAWER ASSY	248S-NATSC
	K9-EZGR-338	1	SPOT GREASE DRAWER	248SR
NI	2E-31107-02	1	CORD SET 14/3 X 8' 15A	248S
NI	2K-70308-01	1	PIPE PLUG REG 1/8 NPT BLK	248S
NI	2M-60301-27	1	PNL LBL SLECTRONIC 4' G4E	248S-NAT/LP
NI	2C-9788	3	MAGNETIC CATCH W/STRIKE	248S
NI	2E-EZG-712	4	HARNESS, SELECTRONIC	248S
NI	2P-50100-15	1	GRIDDLE SCRAPER 12"	CROME UNITS
NI	2P-50100-15-1	-	RE-FILL REPLACEMENTS	CROME UNITS
NI	2P-50100-16	1	BOM AMI CLEANER	CROME UNITS
NI	2P-50100-17	1	20" PALMYRA BRUSH	CROME UNITS

2M-W360: GAS SELECTRONIC GRIDDLE

IMPORTANT: WHEN ORDERING, SPECIFY VOLTAGE OR TYPE GAS DESIRED
INCLUDE MODEL AND SERIAL NUMBER

Some items are included for illustrative purposes only and in certain instances may not be available.

Lang

PARTS LIST

March 3, 2015, Rev. J

Model No: 260S-LP, 260S-NAT, 260S-NATSC
Selectronic Gas Griddle

Key Number	Part Number	Qty Per	Description	
1	K9-EZG-470-1	1	PLATE ASY 5'SEL .5 GRV	260S
	K9-EZG-470-61	1	PLATE ASSY 5' SEL. CHROME	260SCHE-NAT
	K9-EZG-470-60	1	PLATE ASSY 5' SEL. CHROME	260SC
2	K9-41100-24	5	PROBE - ELECTRONIC #1517	260S
3	K9-EZG-232-01	5	WELD BURNER #42	260S
4	2V-80501-04	1	GAS REG 3/4X3/4 CLS I	260S-NAT
4	2V-80501-05	1	GAS REG 3/4X3/4 CLS II	260S-LP
5	K9-EZG-388	1	CENTER BURNER BAFFLE A	260S
6	K9-EZG-391	2	CENTER BURNER BAFFLE B	260S
7	K9-EZG-400	2	END BURNER BAFFLE	260S
8	2A-Z0314	4	FOOT, 4" DIE CAST	260S-NAT, 260S-LP
	2R-200716	4	LEG, 2.5 IN METAL	260S-NATSC
9	2E-30304-22	5	SWTCB175-450oFW/41100-13	260S
10	2K-70801-07	15	SPACER SUPPORT 1/2LG	260S
11	2E-40101-19	5	CIRBD SI TEMP CNTRL NO	260S
12	2E-30303-18	5	SWTTOGON-OFFSPST1/4HP125V	260S
13	2E-30303-06	1	SWT TOG ON-ON DPDT BLK	260S
14	SY9-31601-09-1	1	PILOT LAMP 120V BLACK	260S
15	K9-EZG-606	1	SPOT CNTRL PNL 5' SEL	260S
16	2M-60301-131	1	LABEL - ON / STAND BY	260S
17	2E-30303-05	5	SWT PLATE ON/OFF	260S
18	2M-60301-29	5	PNLLBL SELCT SWTDIAL 450o	260S
19	2R-70701-28	5	KNB BLK 1/4BUSH2SETSCW@90	260S
20	K9-EZG-620	1	CONTROL PANEL 5' COVER	260S-NAT, 260S-LP
21	2M-60301-43	1	DIE CAST PLT LANG SATIN	260S
	K9-60301-43-1	1	DIE CAST LOG + TINNERMAN	260S
22	2C-20602-04	2	TINNERAMN SPD NUT 1/8" DIA	ALL
23	2C-20103-02	AR	SCRW SM PLT 10 X .5 PHLSL	260S
24	K9-EZG-355	2	GREASE DRAWER SLIDE	260S
25	K9-50303-11	2	GREASE DRAWER ASSY	260S
NI	2C-9788	3	MAGNETIC CATCH W/STRIKE	260S
NI	2E-31107-02	1	CORD SET 14/3 X 8' 15A	260S
NI	2E-EZG-712	5	HARNESS, SELECTRONIC	260S
NI	2K-70308-01	1	PIPE PLUG REG 1/8 NPT BLK	260S
NI	2M-60301-27	1	PNL LBL SLECTRONIC 4' G4E	260S
NI	2P-50100-15	1	GRIDDLE SCRAPER 12"	CROME UNITS
NI	2P-50100-15-1	-	RE-FILL REPLACEMENTS	CROME UNITS
NI	2P-50100-16	1	BOM AMI CLEANER	CROME UNITS
NI	2P-50100-17	1	20" PALMYRA BRUSH	CROME UNITS

IMPORTANT: WHEN ORDERING, SPECIFY VOLTAGE OR TYPE GAS DESIRED
INCLUDE MODEL AND SERIAL NUMBER

Some items are included for illustrative purposes only and in certain instances may not be available.

PARTS LIST

March 3, 2015, Rev. J

Model No: 272S-NAT, 272S-LP, 272S-NATSC, 272SHG
Selectronic Gas Griddle

Key Number	Part Number	Qty Per	Description	
1	K9-EZG-473-1	1	PLATE ASY 6'SEL .5 GRV	272S
	K9-EZG-473-01	1	PLATE ASY 6"SEL .5 GRV W/AGC	272SHG
	K9-EZG-473-02	1	PLATE ASY 6'SEL W/XLH-12	272SHE
	K9-EZG-473-03	1	PLATE ASY 6' SEL CHROME	272SCHE
	K9-EZGR-487-6	1	PLATE ASY 6' SEL EZGR .5	272SB
2	K9-41100-24	6	PROBE - ELECTRONIC #1517	ALL
3	K9-EZG-232-01	6	WELD BURNER #42	ALL
4	2V-80501-04	1	GAS REG 3/4X3/4 CLS I	272S-NAT
	2V-80501-05	1	GAS REG 3/4X3/4 CLS II	272S-LP
5	K9-EZG-394	2	CENTER BURNER BAFFLE C	ALL
6	K9-EZG-391	2	CENTER BURNER BAFFLE B	ALL
7	K9-EZG-400	2	END BURNER BAFFLE	ALL
8	2A-Z0314	6	FOOT, 4" DIE CAST	ALL
9	2E-30304-22	6	SWTCB175-450oFW/41100-13	ALL
10	2K-70801-07	18	SPACER SUPPORT 1/2LG	ALL
11	2E-40101-19	6	CIRBD SI TEMP CNTRL NO	ALL
12	2E-30303-18	6	SWTTOGON-OFFSPST1/4HP125V	ALL
13	2E-30303-06	1	SWT TOG ON-ON DPDT BLK	ALL
14	SY9-31601-09-1	1	PILOT LAMP 120V BLACK	ALL
15	K9-EZG-609	1	SPOT CNTRL PNL 6' SEL	272S
	K9-EZGR-609-1	1	SPOT CNTRL PNL 6' SEL	272SB
16	2M-60301-131	1	LABEL - ON / STAND BY	ALL
17	2E-30303-05	6	SWT PLATE ON/OFF	ALL
18	2M-60301-29	6	PNLLBL SELCT SWTDIAL 450o	ALL
19	2R-70701-28	6	KNB BLK 1/4BUSH2SETSCW@90	ALL
20	K9-EZG-615	2	CONTROL PANEL COVER 3'	ALL
21	2M-60301-43	1	DIE CAST PLT LANG SATIN	ALL
	K9-60301-43-1	1	DIE CAST LOG + TINNERMAN	ALL
22	2C-20602-04	2	TINNERAMN SPD NUT 1/8" DIA	ALL
23	2C-20103-02	AR	SCRW SM PLT 10 X .5 PHLSL	ALL
24	K9-EZG-355	2	GREASE DRAWER SLIDE	272S
	K9-EZGR-352	2	SPOTWELD BUCKET SLIDE	272SB
25	K9-50303-11	2	GREASE DRAWER ASSY	272S
	K9-EZGR-338	2	SPOT GREASE DRAWER	272SB
NI	2C-9788	6	MAGNETIC CATCH W/STRIKE	272S
NI	2E-30501-03	2	TERM STRP 4 POLE W/PUSH	272SB
NI	2E-31107-02	1	CORD SET 14/3 X 8' 15A	ALL
NI	2E-EZG-712	6	HARNESS, SELECTRONIC	ALL
NI	2K-70308-01	2	PIPE PLUG REG 1/8 NPT BLK	ALL
NI	2M-60301-27	1	PNL LBL SLECTRONIC 4' G4E	ALL
NI	2P-50100-15	1	GRIDDLE SCRAPER 12"	CROME UNITS
NI	2P-50100-15-1	-	RE-FILL REPLACEMENTS	CROME UNITS
NI	2P-50100-16	1	BOM AMI CLEANER	CROME UNITS
NI	2P-50100-17	1	20" PALMYRA BRUSH	CROME UNITS

IMPORTANT: WHEN ORDERING, SPECIFY VOLTAGE OR TYPE GAS DESIRED
INCLUDE MODEL AND SERIAL NUMBER

Some items are included for illustrative purposes only and in certain instances may not be available.

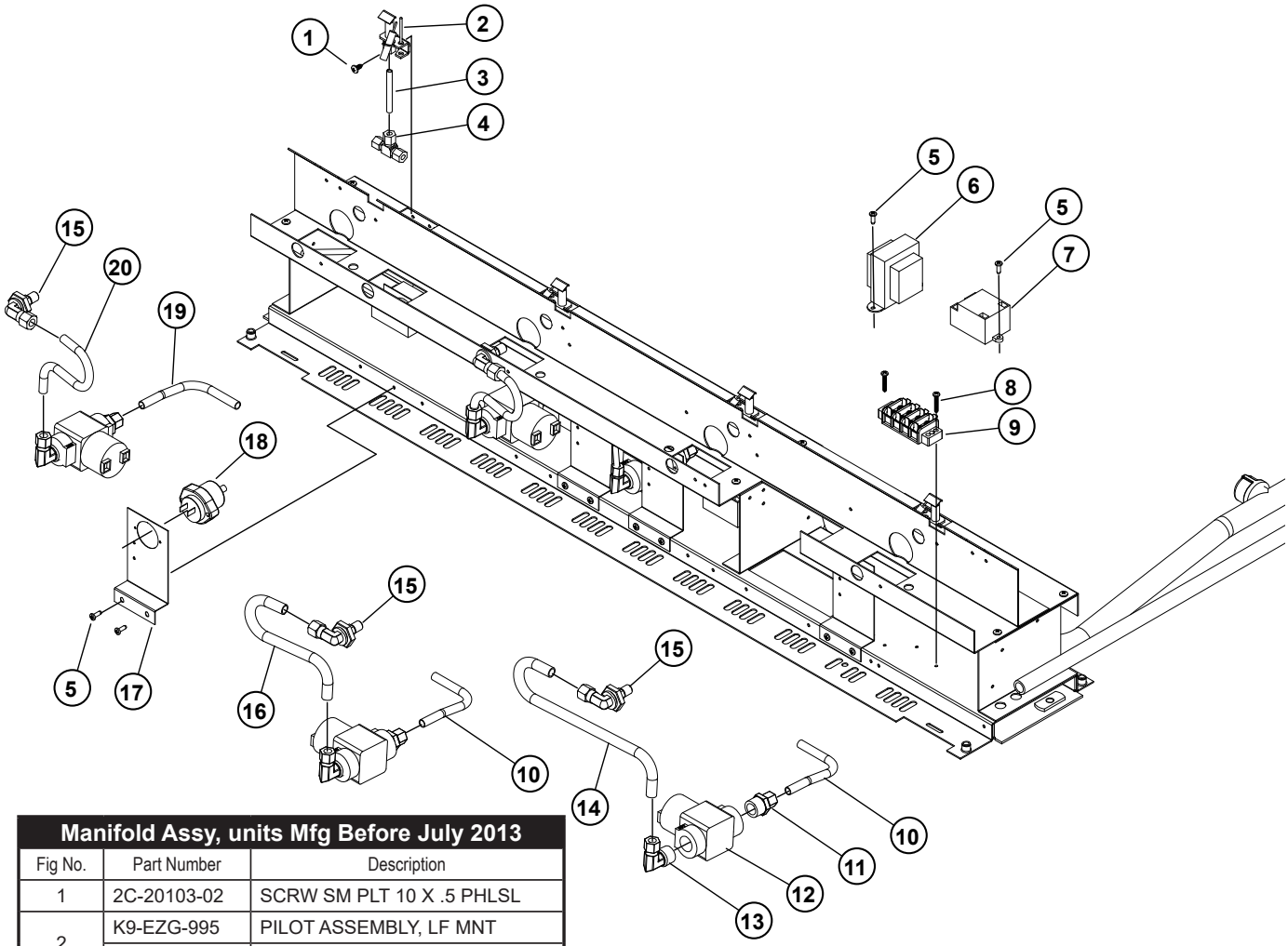

Manifold Assy, units Mfg Before July 2013		
Fig No.	Part Number	Description
1	2C-20103-02	SCRW SM PLT 10 X .5 PHLSL
2	K9-EZG-995	PILOT ASSEMBLY, LF MNT
	K9-EZG-996	PILOT ASSEMBLY, RT MNT
3	K9-EZG-637	PILOT TUBE #1
	K9-EZG-640	PILOT TUBE #2
	K9-EZG-643	PILOT TUBE #3
	K9-EZG-650	PILOT TUBE #5
	K9-EZG-655	PILOT TUBE #9
4	2K-70101-07	BRAS TBE TEE 1/4CC
5	2C-20102-04	SCRW PHD ST 8-32X.5 PLTD
6	2E-31400-07	XFORMR120-208-240/24V40VA
7	2J-80300-03	SPRK IGNITR MODULE SM2
9	2E-30501-03	TERM STRP 4 POLE W/PUSH
10	K9-EZG-628	SOLENOID TUBE A
11	2K-70101-11	BRAS TBE UNON 3/8CC-1/2
12	2V-80502-03	SLENOID VLVE 24VAC 1/2
13	2K-70101-12	BRAS TBE ELBW 3/8CC-1/2
14	K9-EZG-671	BURNER FEED TUBE #3
15	2A-W1185	ORIFICE FITTING - 90 DEG
16	K9-EZG-668	BURNER FEED TUBE #2
17	K9-EZG-288	FLAME SWITCH MOUNT
18	2V-80506-01	FLAME SWT 24 GAS GRID &
19	K9-EZG-631	SOLENOID TUBE B
20	K9-EZG-665	BURNER FEED TUBE #1
NI	2A-45408	ORIFICE HOOD .0935 #42
NI	2A-80400-12	ORIFICE HOOS .0595 #53
NI	2A-80401-03	PILTBRNER ORIFICE .0115LP
NI	2E-40101-19	CIRBD SI TEMP CNTRL NO

Model: Selectronic & ACCU-TEMP MANIFOLD ASSY

DETAIL A

(manufactured before July 2013)

Lang®

SK2405 Rev.A 7/18/2013

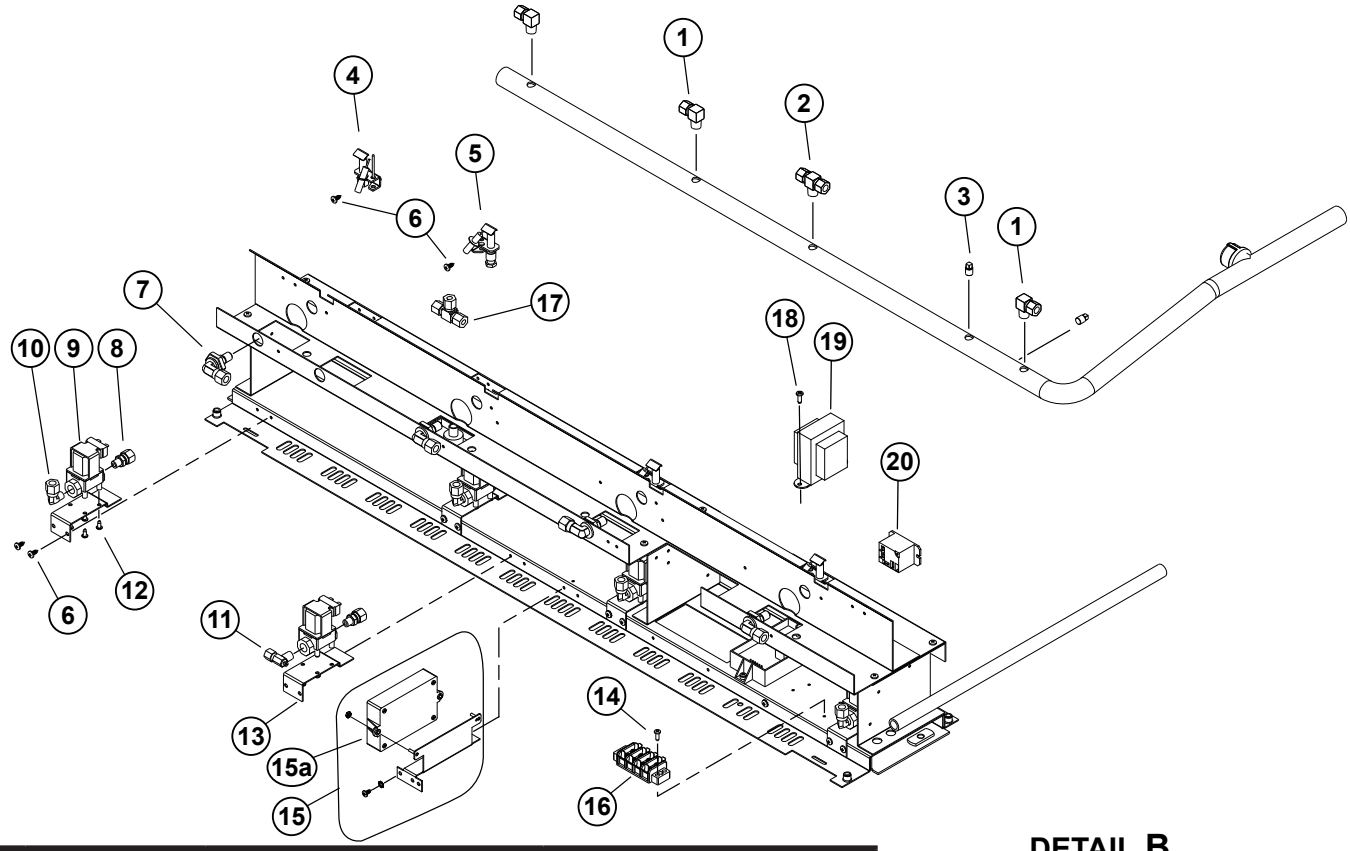

DETAIL B
(manufactured after July 2013)

Manifold Assy, units Mfg After July 2013			
Fig No.	Part Number	Description	Application
1	2K-70101-03	BRASTBEELBOW 1/4NPT-3/8CC	
2	2K-70101-06	BRASTEE BRNCH 1/4NPTM-3/8	
3	2K-70308-01	PIPE PLUG REG 1/8 NPT BLK	
4	K9-EZG-996	PILOT ASSEMBLY, RT MNT	
5	K9-EZG-995	PILOT ASSEMBLY, LF MNT	
6	2C-20103-02	SCRW SM PLT 10 X .5 PHLSL	
7	2A-W1185	ORIFICE FITTING - 90 DEG	
8	2K-45300	FITTING 3/8CC X 1/8NPT	
9	2V-80502-W07	VALVE SOLENOID-1/8 NPT	
10	2K-70101-124	FITTING 1/8NPT X 3/8COMP.	
11	2V-6671	VALVE-LINCOLN BRASS#3817	
12	2C-20102-08	SCRW PHD ST 8-32X.375	
13	K9-EZG-W297	BRKT,SOLENOID VALVE	
14	2C-20102-04	SCRW PHD ST 8-32X.5 PLTD	
15	PS-60101-W15	KIT, PILOT IGNITION CONTROL	mfg between 7/13 & 3/15
15a	2J-80300-W20-1	PILOT IGNITION MODULE	mfg after 3/1/2015
16	2E-30501-03	TERM STRP 4 POLE W/PUSH	
17	2K-70101-07	BRAS TBE TEE 1/4CC	
18	2C-20102-04	SCRW PHD ST 8-32X.5 PLTD	
19	2E-31400-07	XFORMR120-208-240/24V40VA	
	2E-31400-37	XFORMER 240V TO 120V	240V, 224SR-LP24, 248SR-LP24
20	2E-30600-W14	RELAY 277 VAC SPST 30A	
NI	2K-70104-03	FLEXIBLE TUBE 3/8OD X 8	
NI	2K-80101-05	TUBE FLEX 1/4 DIA X 6 LNG	
NI	2K-Z4921	BURNER TUBE FLEX 3/8 OD	
NI	2K-Z6081	PILOT TUBE FLEX 10”	
NI	2K-Z6943	GAS LINE 1/4”D x 8”L	
NI	2K-Z6945	GAS LINE 1/4”D x 16”L BBQ	
NI	2A-45408	ORIFICE HOOD #42 GRID NAT	NAT
NI	2A-80400-12	ORIFICE HOOD .0595 #53, LP	LP

Lang®

SK2671 Rev. E 11/23/2021

2M-W360: GAS SELECTRONIC GRIDDLE

March 3, 2015, Rev. J

LIMITED EQUIPMENT WARRANTY

Lang Manufacturing warrants to the original purchaser of new Lang products to be free from defects in material or workmanship, under normal and proper use and maintenance service as specified by Lang and upon proper installation and start-up in accordance with the instructions supplied with each Lang unit. Lang's obligation under this warranty is limited to a period of one [1] year beginning from the date of original installation. The warranty period begins upon the earlier of the date of original installation or up to six [6] months after the original shipment, from the factory, of the covered product. Defects that occur as a result of normal use, within the time period and limitations defined in this warranty, will at Lang' discretion have the parts replaced or repaired by Lang or a Lang-authorized service agency.

THIS WARRANTY IS SUBJECT TO ALL LISTED CONDITIONS

Repairs performed under this warranty are to be performed by a Lang authorized service agency. Lang will not be responsible for charges incurred or service performed by non-authorized repair agencies. In all cases, the nearest Lang-authorized service agency must be used. Lang will be responsible for normal labor charges incurred in the repair or replacement of a warrantied product within 50 miles (80.5 km) of an authorized service agency. Time and expense charges for anything beyond that distance will be the responsibility of the owner. All labor will need to be performed during regular service hours. Any overtime premium will be charged to the owner. For all shipments outside the U.S.A. and Canada, please see the International Warranty for specific details. It is the responsibility of the owner to inspect and report any shipping damage claims, hidden or otherwise, promptly following delivery. No mileage or travel charges will be honored on any equipment that is deemed portable. In general, equipment with a cord and plug weighing less than 50 lb. (22.7 kg) is considered portable and should be taken or shipped to the closest authorized service agency, transportation prepaid.

CONTACT

Should you require any assistance regarding the operation or maintenance of any Lang Manufacturing; phone or email our service department. In all correspondence provide the model number and serial number of the unit needing service; include the voltage or gas type.

Normal Business Hours: 8:00 a.m. to 4:30 p.m. Central

Telephone: 800-264-7827 Tech Service Option 2

Email: TechService@partstown.com

www.LangWorld.com

PRODUCTS	PARTS	LABOR
Lang Strato Series™ convection ovens	2 years	2 years
Lang convection oven doors (excluding hardware)	lifetime	2 years
Lang griddles	2 years	2 years
Chrome griddle surfaces [against peeling]	5 years	
Cast iron grates, burners and burner shields	1 year	
Original Lang parts sold to repair Lang equipment	90 days	
Lang Ranges	2 years	2 years
Lang Marine	2 years	2 years

WARRANTY EXCLUSIONS

THE FOLLOWING WILL NOT BE COVERED UNDER WARRANTY.

Lang's sole obligation under this warranty is limited to either repair or replacement parts, subject to the additional limitations detailed below. This warranty neither assumes nor authorizes any person to assume obligations other than those expressly covered by this warranty.

- Any product which has not been used, maintained, or installed in accordance with the directions published in the appropriate installation sheet and/or owner's manual, including incorrect gas or electrical connection. Lang is not liable for any unit which has been mishandled, abused, misapplied, subjected to harsh chemicals, modified by unauthorized personnel, damaged by flood, fire, or other acts of nature [or God], or which have an altered or missing serial number.
- Installation, labor, and job checkouts, calibration of heat controls, air and gas burner/bypass/pilot adjustments, gas or electrical system checks, voltage and phase conversions, cleaning of equipment, or seasoning of griddle surface.
- Replacement of fuses or resetting of circuit breakers, safety controls, or reset buttons.
- Replacement of broken or damaged glass components, quartz heating elements, and light bulbs.
- Labor charges for all removable and consumable parts in gas charbroilers and hotplates, including but not limited to burners, grates, and radiants.
- Any labor charges incurred by delays, waiting time, or operating restrictions that hinder a service technician's ability to perform service.
- Replacement of parts that fail or are damaged due to normal wear or labor for replacement of parts that can be replaced during a daily cleaning routine, such as but not limited to silicone belts, PTFE non-stick sheets, control labels, knobs, bulbs, fuses, quartz heating elements, baskets, racks, and grease drawers.
- Any economic loss of business or profits.
- Non-OEM parts. Use of non-OEM parts without Lang's approval will void the warranty.
- Components that should be replaced when damaged or worn, but have been field-repaired instead [e.g. field-welded fry pots]
- Units exceeding one [1] year from original installation date.

ADDITIONAL WARRANTIES

- Specific/chain-specific equipment may have additional and/or extended warranties.

The foregoing warranty is in lieu of any, and all other warranties expressed or implied and constitutes the entire warranty.

STAR HOLDINGS GROUP
265 HOBSON ST. SMITHVILLE, TN 37166
(800) 264-7827
www.starholdingsgrp.com