

UE-3C 3kW Industrial Electric Heater

User Manual

[Revision 1.0]

READ THIS MANUAL CAREFULLY BEFORE USE – FAILURE TO DO SO MAY RESULT IN INJURY, PROPERTY DAMAGE AND MAY VOID WARRANTY. • KEEP THIS MANUAL FOR FUTURE REFERENCE. • Products covered by this manual may vary in appearance, assembly, inclusions, specifications, description, and packaging.

Safety

Safety messages are designed to alert you to possible dangers or hazards that could cause death, injury or equipment or property damage if not understood or followed. Safety messages have the following symbols:



You WILL be KILLED or SERIOUSLY INJURED if you do not follow instructions.



You CAN be KILLED or SERIOUSLY INJURED if you do not follow instructions.



You CAN be INJURED if you do not follow instructions or equipment damage may occur.

It is vital that you read and understand this user manual before using the product, including safety warnings, and any assembly and operating instructions. Keep the manual for future reference.

Safety precautions and recommendations detailed here must be fully understood and followed to reduce the risk of injury, fire, explosion, electrical hazard, and/or property damage.

Safety information presented here is generic in nature – some advice may not be applicable to every product. The term "equipment" refers to the product, be it electrical mains powered, battery powered or combustion engine powered.

- **Before Use** - If you are not familiar with the safe operation/handling of the equipment or are in any way unsure of any aspect of suitability or correct use for your application, you should complete training conducted by a person or organization qualified in safe use and operation of this equipment, including fuel/electrical handling and safety.
- Do NOT operate the equipment in flammable or explosive environments, such as in the presence of flammable liquids, gases, or dust. The equipment may create sparks or heat that may ignite flammable substances.
- Keep clear of moving parts.
- Equipment may be a potential source of electric shock or injury if misused.
- Do NOT operate the equipment if it is damaged, malfunctioning or is in an excessively worn state.
- Do NOT allow others to use the equipment unless they have read this manual and are adequately trained.
- Keep packaging away from children - risk of suffocation! Operators must use the equipment correctly. When using the equipment, consider conditions and pay due care to persons and property.

General Work Area Safety

- Work areas should be clean and well it.
- Do not operate the equipment if bystanders, animals etc are within operating range of the equipment or the general work area.
- If devices are provided for connecting dust extraction / collection facilities, ensure these are connected and used properly. Dust collection can reduce dust-related hazards.

General Personal Safety

- Wear appropriate protective equipment when operating, servicing, or when in the operating area of the equipment to help protect from eye and ear injury, poisoning, burns, cutting and crush injuries. Protective equipment such as safety goggles, respirators, non-slip safety footwear, hard hat, hearing protection etc should be used for appropriate equipment / conditions. Other people nearby should also wear appropriate personal protective equipment. Do not wear loose clothing or jewellery, which can be caught in moving parts. Keep hair and clothing away from the equipment.
- Stay alert and use common sense when operating the equipment. Do not over-reach. Always maintain secure footing and balance.
- Do not use the equipment if tired or under the influence of drugs, alcohol, or medication.
- This equipment is not intended for use by persons with reduced physical, sensory, or mental capabilities.

General Fuel Safety

- Petrol/fuel/gasoline is extremely flammable – keep clear of naked flames or other ignition sources.
- Do not spill fuel. If you spill fuel, wipe it off the equipment immediately – if fuel gets on your clothing, change clothing.
- Do NOT smoke near fuel or when refuelling.
- Always shut off the engine before refuelling.
- Do NOT refuel a hot engine.
- Open the fuel cap carefully to allow any pressure build-up in the tank to release slowly.
- Always refuel in well-ventilated areas.
- Always check for fuel leakage. If fuel leakage is found, do not start, or run the engine until all leaks are fixed.

General Carbon-Monoxide Safety

- Using a combustion engine indoors **CAN KILL IN MINUTES**. Engine exhaust contains carbon-monoxide – a poison you cannot smell or see.
- Use combustion engines OUTSIDE only, and far away from windows, doors, and vents.

General Equipment Use and Care

- Keep packaging away from children and pets, potential risk of suffocation or choking.
- The equipment is designed for domestic use only.
- Handle the equipment safely and carefully.
- Before use, inspect the equipment for misalignment or binding of moving parts, loose components, damage, or any other condition that may affect its operation. If damaged, have the equipment repaired by an authorised service centre or technician before use.
- Prevent unintentional starting of the equipment - ensure equipment and power switches are in the OFF position before connecting or moving equipment. Do not carry equipment with hands or fingers touching any controls. Remove any tools or other items that are not a part of the equipment from it before starting or switching on.
- Do not force the equipment. Use the correct equipment for your application. Equipment will perform better and be safer when used within its design and usage parameters.
- Use the equipment and accessories etc. in accordance with these instructions, considering working conditions and the work to be performed. Using the equipment for operations different from those intended could result in hazardous situations.
- Always keep equipment components (engines, hoses, handles, controls, frames, housings, guards etc) and accessories (cutting tools, nozzles, bits etc) properly maintained. Keep the equipment clean and, where applicable, properly lubricated.
- Store the equipment out of reach of children or untrained persons. To avoid burns or fire hazards, let the equipment cool completely before transporting or storing. Never place or store the equipment near flammable materials, combustible gases, or liquids etc.
- The equipment is not weather-proof, and should not be stored in direct sunlight, at high ambient temperatures or locations that are damp or humid.
- Do not clean equipment with solvents, flammable liquids, or harsh abrasives.
- For specific equipment safety use and care, see Equipment Safety.

© Unimac

General Electrical Safety

- Inspect electrical equipment, extension cords, power bars, and electrical fittings for damage or wear before each use. Repair or replace damaged equipment immediately.
- Ensure all power sources conform to equipment voltage requirements and are disconnected before connecting or disconnecting equipment.
- When wiring electrically powered equipment, follow all electrical and safety codes.
- Always use a Residual Current Device (RCD) (GFCI) / Earth Leakage Circuit Breaker / Safety Switch when operating this item (electrical items only).
- High voltage / high current power lines may be present. Use extreme caution to avoid contact or interference with power lines. Electrical shock can be fatal.

General Electrical Safety

- Electrically grounded equipment must have an approved cord and plug and be connected to a grounded electrical outlet.
- Do NOT bypass the ON/OFF switch and operate equipment by connecting and disconnecting the electrical cord.
- Do NOT use equipment that has exposed wiring, damaged switches, covers or guards.
- Do NOT use electrical equipment in wet conditions or in damp locations.
- Do NOT use electrical cords to lift, move or carry equipment.
- Do NOT coil or knot electrical cords, and ensure electrical cords are not trip hazards.

General Service Information

- The equipment must be serviced or repaired at authorised service centres by qualified personnel only.
- Replacement parts must be original equipment manufacturer (OEM) to ensure equipment safety is maintained.
- Do NOT attempt any maintenance or repair work not described in this manual.
- After use, the equipment and components may still be hot – allow the equipment to cool and disconnect spark plugs and/or electrical power sources and/or batteries from it before adjusting, changing accessories, or performing repair or maintenance.
- Do NOT adjust while the equipment is running.
- Perform service-related activities in suitable conditions, such as a workshop.
- Replace worn, damaged or missing warning/safety labels immediately.

Child Choking Hazard!



- **WARNING: CHOKING HAZARD - CHILDREN UNDER 8 YRS. CAN CHOKE OR SUFFOCATE ON SMALL PARTS. ADULT SUPERVISION REQUIRED.**
- Carefully inspect anything a baby or child could gain access to, including this product & packaging.
- Dangers include anything of a size that could become stuck or lodged in a baby or child's airway.
- Dangers include things like raw, hard fruit and vegetable pieces, large pieces of meat, bones or sausage skins, popcorn, nuts, hard lollies and corn chips, small magnets and batteries, coins, beads, marbles and small uninflated balloons, broken toys and smaller toys, buttons, keys, and coins. But there are also many more.
- Pay particular attention to accessories, nuts, bolts, screws, washers, caps, covers, loose parts, parts that could be removed or break off, pieces of packaging, staples, tape etc.
- In the case of any doubt, secure the item of concern in an appropriate manner, or completely remove the possibility of access by a baby or child.

Safety Instructions

Please read this instruction manual carefully before use and operate the heater correctly. Keep this manual in a safe place for future reference.

This heater is an electric fan heater and may be used in homes, warehouses, workshops, or greenhouses. It is fitted with a thermostat and a self-resetting thermal cut-out. The thermostat senses the air inlet temperature and regulates the room temperature. If overheating occurs, the heater will automatically switch off to ensure safety.

The fan motor is not controlled by the thermostat. When the thermostat switches off the heating element, the fan will continue to operate.

When using the heater for the first time, a slight emission of smoke may be noticed. This is normal and will stop after a short time. The heating element is made of stainless steel and is coated with protective oil during manufacture. The smoke is caused by residual oil burning off.

Warnings and Precautions

WARNING: TO AVOID OVERHEATING, DO NOT COVER THE HEATER DURING OPERATION.

When using electrical appliances, basic safety precautions must always be followed, including the following:

- This fan heater is not suitable for outdoor use in damp weather, bathrooms, or other wet or humid environments.
- The heater can become very hot. Keep it at a safe distance from flammable materials such as furniture and curtains.
- **WARNING: TO REDUCE THE RISK OF FIRE, KEEP TEXTILES, CURTAINS, AND OTHER FLAMMABLE MATERIALS AT LEAST 1 METRE FROM THE AIR OUTLET.**
- Do not cover the heater.
- Do not use the heater if it has been dropped.
- Do not place the heater directly below a wall power point. Always use the heater on a flat, stable surface.
- Do not use the heater if there are visible signs of damage.
- Do not connect the heater to an external on/off timer or any device that automatically switches the heater on.
- Do not use or store the heater in areas where flammable liquids or gases are present.
- If an extension lead is used, it must be as short as possible and fully extended.
- Do not connect other appliances to the same power outlet as the heater.
- Do not use the heater near a bath, shower, or swimming pool.
- If the supply cord is damaged, it must be replaced by the manufacturer, an authorised service agent, or a similarly qualified person to avoid a hazard.
- Always supervise the heater during operation and keep children and animals away from it.
- Do not place the heater on moving vehicles or in locations where it may easily tip over.

- When the heater is not in use for long periods, unplug it from the power outlet. Do not leave the heater unattended for extended periods while operating. Always remove the plug by pulling it straight out—never pull on the power cord.
- Keep the heater away from curtains or locations where the air inlet may become blocked.
- The power connector is waterproof when not in use. To prevent electric shock or leakage current, do not operate the heater with wet hands or when there is water on the power cord.
- Do not dispose of electrical appliances as unsorted household waste. Use separate collection facilities. Contact your local council for information on available collection systems. Incorrect disposal may allow hazardous substances to enter groundwater and the food chain, posing risks to health and the environment.
- This appliance is not intended for use by persons (including children) with reduced physical, sensory, or mental capabilities, or a lack of experience or knowledge, unless they are supervised or instructed by a person responsible for their safety.
- Children must be supervised to ensure they do not play with the appliance.
- Children under 3 years of age must be kept away from the heater unless continuously supervised.
- Children aged 3 to under 8 years may only switch the appliance on or off if it has been placed in its intended operating position and they have been supervised or instructed in safe use and understand the hazards involved. They must not plug in, adjust, clean, or perform maintenance on the appliance.
- **CAUTION: SOME PARTS OF THIS HEATER CAN BECOME VERY HOT AND MAY CAUSE BURNS. EXTRA CARE MUST BE TAKEN WHERE CHILDREN OR VULNERABLE PERSONS ARE PRESENT.**
- Cleaning and user maintenance must not be carried out by children without supervision.
- This appliance may be used by children aged 8 years and over, and by persons with reduced physical, sensory, or mental capabilities, provided they have been given supervision or instruction on safe use and understand the hazards involved.
- **WARNING: DO NOT USE THIS HEATER IN SMALL ROOMS WHEN OCCUPIED BY PERSONS WHO CANNOT LEAVE THE ROOM INDEPENDENTLY, UNLESS CONSTANT SUPERVISION IS PROVIDED.**

Safety Symbols

The product may have safety warning labels attached to it, explained below. Understand the symbols on your product and their meanings. If any stickers become unreadable, unattached etc., replace them.



Flammable Material Hazard
Flammable liquids, gases, or substances etc may present. Avoid ignition sources and open flames. Danger of fire.



Read User Manual
Read and fully understand product safety warnings, operation, procedures etc before using the product.



Use Hand Protection
Wear appropriate hand protection and take due care as the product or use of the product may present hand hazards.



Carbon-Monoxide Hazard
Do not use the product in confined areas or without adequate ventilation. Carbon-monoxide poisoning can be fatal.



Electrocution / Electrical Shock Hazard
High voltage or high current electricity may be present or required by the product. Take due care when handling electrical products, cables, plugs and leads. Electrical shock can be fatal.



Toxic Fumes / Dust Hazard
Using the product or by-products from use may produce fumes, smoke or particles that could be harmful if inhaled. Wear appropriate breathing protection and have adequate ventilation.



Explosive Material Hazard
Combustible liquids, gases, or substances etc may be present. Avoid ignition sources and open flames. Danger of explosion.



Cutting / Amputation Hazard
The product may have blades, edges or mechanical devices that can cause severe cut injury to fingers, limbs etc. Take due care when handling and using the product.



Crush Hazard
The product may have blades, edges or mechanical devices that can cause severe crush injury to fingers, limbs etc. Take due care when handling and using the product.



Single Operator Only
The product must be operated by a single person only. More than one person operating the product may introduce additional hazards.



Use Face Protection
Wear appropriate full-face protection and take due care as the product or use of the product may present face and eye hazards.



Use Foot Protection
Wear appropriate foot protection and take due care as the product or use of the product may present foot hazards.



Use Eye / Ear / Head Protection
Wear appropriate eye and / or ear and / or head protection and take due care as the product or use of the product may present eye, hearing, and head hazards.



Running Hazard
Do not run on or near the product as doing so may present a fall hazard.



Diving Hazard
Do not dive into the product as doing so may present a neck / head injury hazard.



Adult Supervision Required
Always supervise children and other users of a product to prevent drowning or injury.



Skin Penetration / Puncture Hazard
The product may produce pressure, emit liquids or objects that can cause severe injury to fingers, limbs, blood etc. Take due care when handling and using the product.



Hot Surface Hazard
Be aware that the product may produce high temperatures and hot surfaces that can cause burn injuries.



Flying Debris Hazard
Be aware that the product or use of the product may present hazards produced by flying debris. Wear appropriate clothing and protective devices.



Moving Parts Hazard
Be aware that the product contains or uses mechanical devices that move or rotate. Always wait for moving parts to stop fully before handling the product, adjusting, maintenance etc.

© Unimac

 **Carbon-Monoxide Hazard** Do not use the product in confined areas or without adequate ventilation. Carbon-monoxide poisoning can be fatal.	 **Pull Hazard** Be aware that the product contains or uses mechanical devices that can pull in objects and can cause severe injury to fingers, limbs etc. Take due care when handling and using the product.	 **Slope / Fall Injury Hazard** Be aware that using the product on sloping surfaces or in slippery conditions may present additional dangers from falls and contact with blades, moving parts, hot surfaces etc.	 **"Slam Dunk" Warning** Do NOT attempt "slam dunk" manoeuvres as this may result in severe injury due to falling, product breakage or collapse etc.
 **Electrocution / Electrical Shock Hazard - Outdoor** High voltage or high current electricity may be present or required by the product. Do NOT use in rain, damp, or wet conditions. Electrical shock can be fatal.	 **Electrocution / Electrical Shock Hazard - Disconnect** High voltage or high current electricity may be present or required by the product. Always disconnect the product from the electrical supply before handling the product, adjusting, maintenance etc.	 **Power Line Electrocution Hazard** High voltage / high current power lines may be present. Use extreme caution to avoid contact or interference with power lines. Electrical shock can be fatal.	 **"Kick-Back" Hazard** High level of "kick-back" hazard that can cause the machine to suddenly rotate towards operator. Kick-back injury can be fatal.
 **Winch Operator Position Hazard** Do NOT stand between winch and load. Do NOT use winch to move people.	 **Winch Lift Hazard** Do NOT LIFT load vertically. Use machine to PULL only.	 **Cable Hazard** Ensure that load bearing cable is not kinked or knotted.	 **Winch Cable Hazard** Ensure that there is a minimum number of cable coils on winching mechanism.
 **Winch Hook Hazard** Carry hook to load – do NOT throw or run.	 **Flash / Blinding Hazard** Wear appropriate eye protection for welding. Direct exposure to weld arcs may cause permanent eye injury.	 **Laser Hazard** Laser may be in use – do NOT look directly at laser or allow others to.	 **Choking Hazard** Children under 8 yrs. Can choke or suffocate on small parts. Adult supervision required.

Table of Contents

Safety **2**
Safety Symbols 5
Assembly **8**
Operation **9**
Control Panel Features 9
Operating Instructions 9
Cleaning and Maintenance **10**
Troubleshooting **11**
Specifications **12**

© Unimac

Assembly

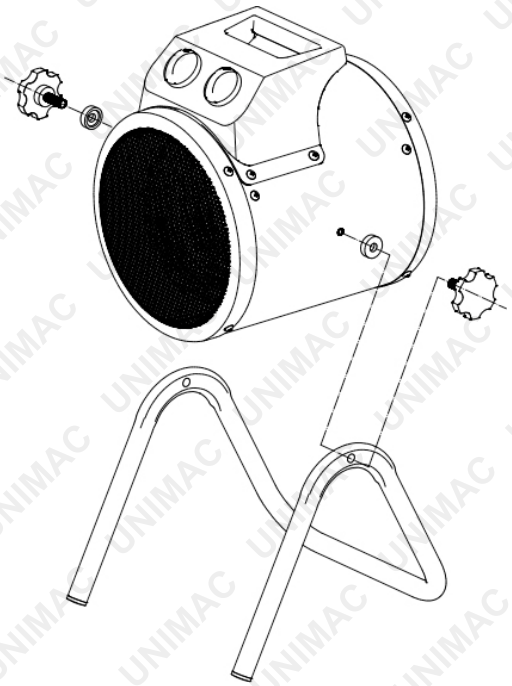

1. Align the support frame with the mounting holes on both sides of the heater.
2. Secure the frame using the fixing screws and an internal hex (Allen) key.
3. Once secured, install the angle-adjustment star knobs and tighten firmly.

© Unimac

Operation

Control Panel Features

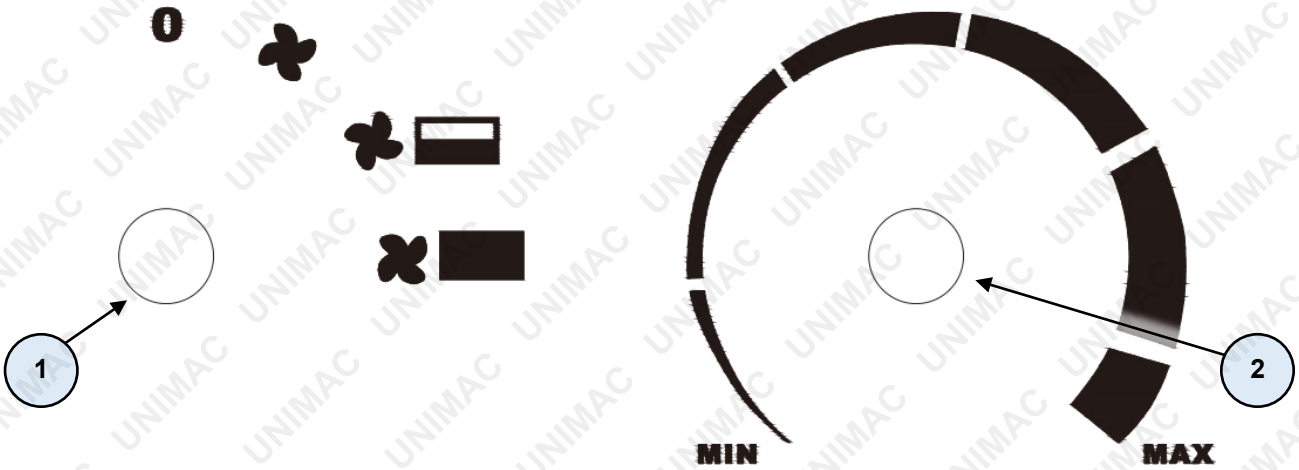

1. **Left Knob – Thermostat Control**

   Adjusts the desired room temperature. The heater will automatically switch the heating element ON or OFF to maintain the set temperature.

2. **Right Knob – Heat Output Selector**

   Controls the heat output level. Turn clockwise from MIN to MAX to increase heating power.

Operating Instructions

1. Place the fan heater upright on a firm, level surface and at a safe distance from wet areas and flammable materials.
2. Connect the fan heater to a suitable mains power outlet.
3. Turn the thermostat control to MAX and select the required heat output.
4. The heater will operate when the heat output selector is set to one of the power settings:
   - **Fan mode**: When set to Fan, the heater operates in ventilation mode only and blows air without heating.
   - **Low Heat / High Heat**: When set to Low Heat or High Heat, the heater operates in heating mode.
5. Once the room reaches the set temperature, the heating element will switch off automatically while the fan continues to operate. When the room temperature falls, the heating element will switch on again. This automatic cycling maintains a constant room temperature.
6. Before switching off the heater, turn the thermostat to the MIN position and set the selector to Fan mode. Allow the heater to cool for approximately two minutes, then switch it off and unplug it from the power outlet.
7. After use, always switch off the heater first and unplug it from the power outlet.

© Unimac

Cleaning and Maintenance

Before cleaning or storing the heater:

- Switch off the heater, unplug it from the power outlet, and allow it to cool completely.

Cleaning the heater:

- Wipe the outer casing regularly with a soft sponge or cloth.
- For heavier dirt, use a sponge dampened with warm water (below 45 °C) and a mild detergent.
- Dry the casing thoroughly with a clean, dry cloth.
- Ensure no water enters the heater.
- Do not splash water onto the appliance.
- Do not use solvents such as petrol, toluene, or similar chemicals, as these may damage the casing.

Cleaning the power cord and plug:

- Wipe the power cord and plug clean.
- Ensure they are completely dry before storage.
- Store the cord and plug in a plastic bag if required.

Storage:

- Allow the heater to cool completely before storage.
- Ensure the heater is clean and dry.
- Cover the heater with a plastic bag.
- Place it in its packaging and store in a dry, well-ventilated location.

© Unimac

Troubleshooting

You can resolve many common issues easily, potentially avoiding the cost of a service call. Review the information below before contacting a service centre.

Problem	Possible Cause	Action
The heater does not operate, even though it is plugged in and the switch and thermostat are turned on.	Plug is loose or not properly connected	Unplug the heater, check the plug and power outlet, then reconnect securely.
	No power at the outlet	Connect the heater to a working power outlet.
Heating element is glowing	Input voltage is too high or too low	Use a power supply that matches the rating shown on the heater's rating label.
	Air inlet grille is blocked	Ensure the heater is kept clear of curtains, plastic bags, paper, or any items that may block the air inlet.
Heater does not heat; fan operates only	Heat setting not selected	Turn the selector to Low Heat or High Heat.
	Thermostat has switched off	Turn the thermostat and listen for a click. If the thermostat is not damaged, the heater will automatically restart once it has cooled.
	Self-resetting thermal cut-out has activated	Switch off the heater, unplug it, and check for blocked air inlets or outlets. Wait at least 10 minutes for the protection system to reset before restarting.
Abnormal noise during operation	Heater is not positioned upright or on a level surface	Place the heater on a flat, stable, level surface.

© Unimac

Specifications

Power Type	Corded Electric
Motor Power	23W
Heating Output	3kW
Heat Settings	3
Voltage	220–240V
Power Plug	15A
Power Cord Length	1.6m
Airflow	280m3/h
Heating Element Type	Finned Stainless Steel
Safety Feature	Overheat Protection

© Unimac

Some experts believe that the incorrect or prolonged use of almost any product may cause serious injury or death. To help reduce your risk of serious injury or death, refer to the information below. For more information, see www.datastreamserver.com/safety

- Consult all documentation, packaging, and product labelling before use. Note that some products feature documentation available online. It is recommended to print and retain the documentation.
- Before each use, check the product for loose/broken/damaged/missing parts, wear, or leaks (if applicable). Never use a product with loose/broken/damaged/missing parts, wear, or leaks.
- Products must be inspected and serviced (if applicable) by a qualified technician every 6 months. This is based on average residential use by persons of average size and strength, and on a property of average metropolitan size. Use beyond these recommendations may require more frequent inspections/servicing.
- Ensure that all users of the product have completed a suitable industry recognised training course before being allowed access to the product.
- The product has been supplied by a general merchandise retailer that may not be familiar with your specific application or description of application. Be sure to attain third-party approval from a qualified specialist for your application before use, regardless of any assurances from the retailer or its representatives.
- This product is not intended for use where fail-safe operation is required. As with any product (for example, automobile, computer, toaster), there is the possibility of technical issues that may require the repair or replacement of parts, or the product itself. If the possibility of such failure and the associated time it may take to rectify could in any way inconvenience the user, business, or employee, or financially affect the user, business, or employee, then the product is not suitable for your requirements. This product is not intended for use where incorrect operation or a failure of any kind, including but not limited to, a condition requiring product return, replacement, parts replacement, or service by a technician may cause financial loss, loss of employee time or an inconvenience requiring compensation.
- If this product has been purchased in error when considering the information presented here, contact the retailer directly for details of their returns policy, if required.

edisons.com.au

© Unimac. All rights reserved. No part of this document, including descriptive content, concepts, ideas, diagrams, or images may be reproduced or transmitted in any form or by any means, electronic or mechanical, including photocopying, scanning, or recording, or any information storage and retrieval system, without express permission or consent from the publisher.