

Husqvarna®

Husqvarna Attachments

Deflector 546 51 51-01

Deflector: 546 51 51-01

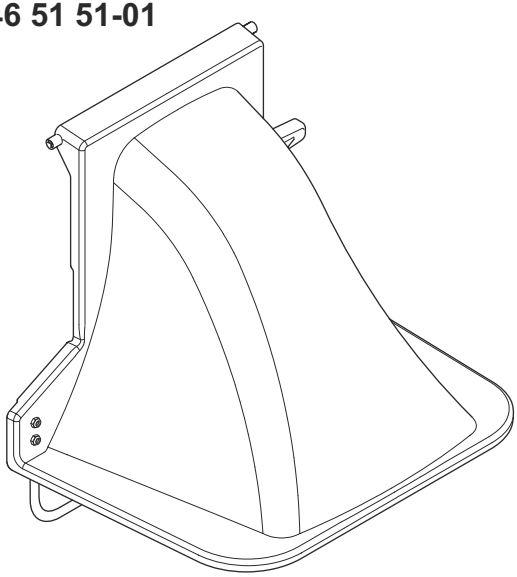

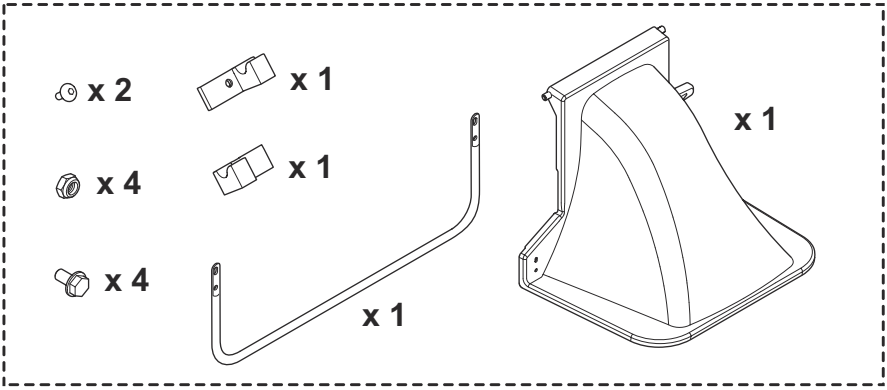

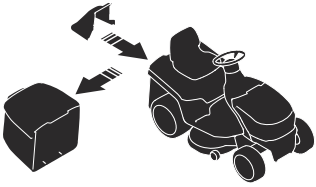

1

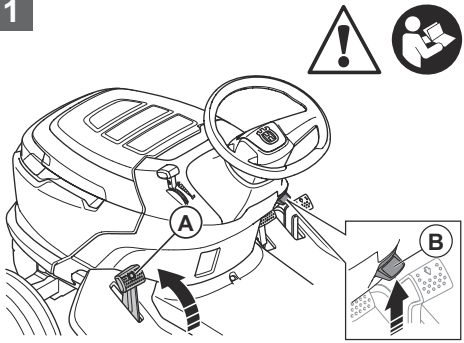

2

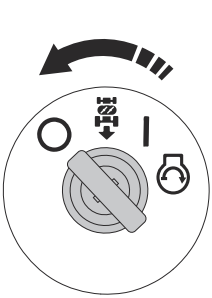

3

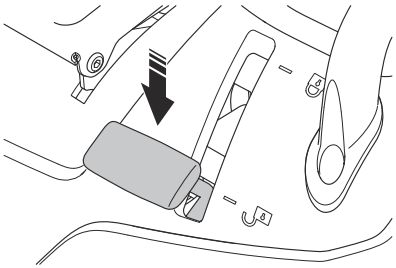

4

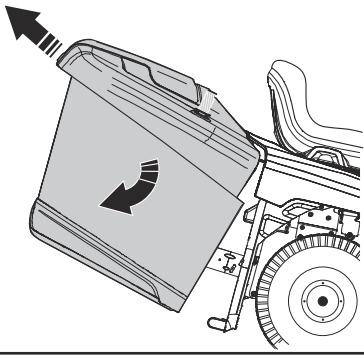

5

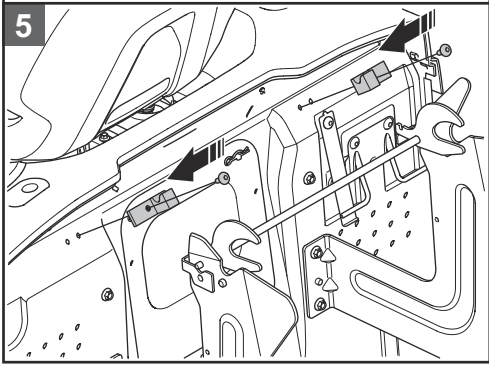

6

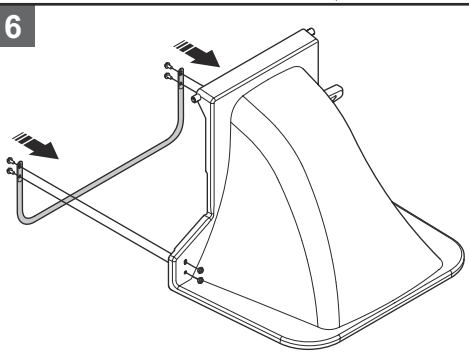

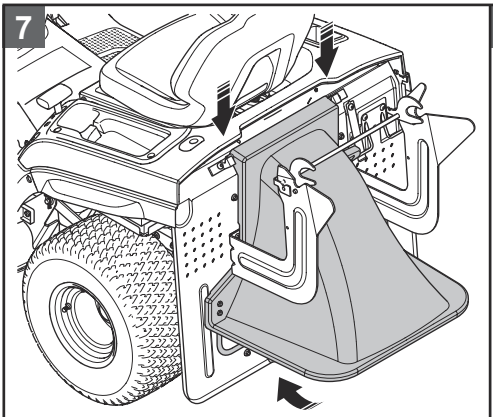
7

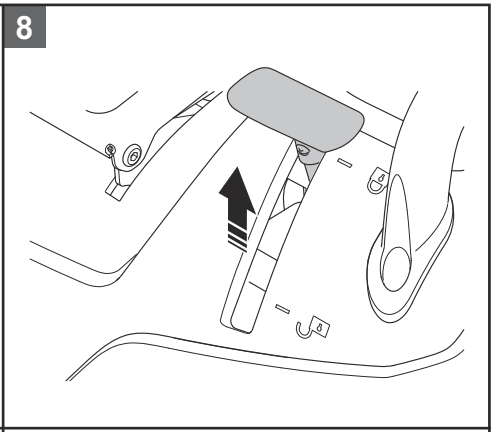
8

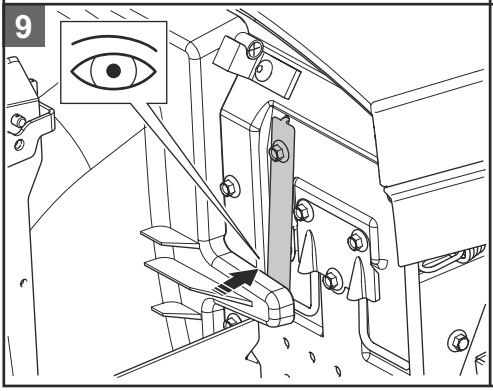
9



Husqvarna®

www.husqvarna.com

Original instructions



1143961-38

2024-03-15