Installation Manual

Installation and Appliance Setup

***CAUTION! Risk of Fire! DO NOT** store instruction manuals inside fireplace cavity. High temperatures could cause a fire.*

INSTALLER: Leave this manual with the appliance, not inside the appliance.
CONSUMER: Retain this manual for future reference. Do not store inside the appliance.

***NOTICE: DO NOT** discard this manual!*

ECHELON-C SERIES

MAJESTIC

GAS-FIRED

C UL US

LISTED

Models:

ECHEL36IN-C
ECHEL36STIN-C
ECHEL48IN-C
ECHEL48STIN-C
ECHEL60IN-C
ECHEL72IN-C

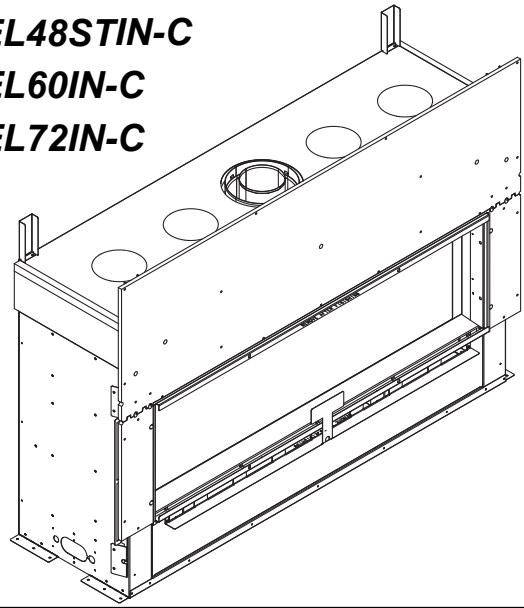

This appliance may be installed as an OEM installation in manufactured home (USA only) or mobile home and must be installed in accordance with the manufacturer's instructions and the *Manufactured Home Construction and Safety Standard, Title 24 CFR, Part 3280* in the United States, or the *Standard for Installation in Mobile Homes, CAN/CSA Z240 MH Series,* in Canada.

This appliance is only for use with the type(s) of gas indicated on the rating plate. This appliance is not convertible for use with other gases, unless a certified kit is used.

⚠ WARNING:
FIRE OR EXPLOSION HAZARD
Failure to follow safety warnings exactly could result in serious injury, death, or property damage.

- **DO NOT** store or use gasoline or other flammable vapors and liquids in the vicinity of this or any other appliance.
- **What to do if you smell gas**
  - **DO NOT** try to light any appliance.
  - **DO NOT** touch any electrical switch. **DO NOT** use any phone in your building.
  - Leave the building immediately.
  - Immediately call your gas supplier from a neighbor's phone. Follow the gas supplier's instructions.
  - If you cannot reach your gas supplier, call the fire department.
- Installation and service must be performed by a qualified installer, service agency, or the gas supplier.

⚠ DANGER

HOT GLASS WILL CAUSE BURNS.

DO NOT TOUCH GLASS UNTIL COOLED.

NEVER ALLOW CHILDREN TO TOUCH GLASS.

A barrier designed to reduce the risk of burns from the hot viewing glass is provided with this appliance and must be installed for the protection of children and other at-risk individuals.

Decorative barrier front must be ordered separately at time of appliance purchase. See Section 3.A.

⚠ Safety Alert Key:

- ***DANGER!*** *Indicates a hazardous situation which, if not avoided will result in death or serious injury.*
- ***WARNING!*** *Indicates a hazardous situation which, if not avoided could result in death or serious injury.*
- ***CAUTION!*** *Indicates a hazardous situation which, if not avoided, could result in minor or moderate injury.*
- ***NOTICE:*** *Used to address practices not related to personal injury.*

Note: *The term "recommend" or "recommended" does not indicate a requirement. It is a best practice suggested by Hearth & Home Technologies®.*

Table of Contents

Installation Standard Work Checklist 3

1 Product Specific and Important Safety Information

A. Appliance Certification 4
C. BTU Specifications 4
D. High Altitude Installations 4
E. Non-Combustible Materials Specification 5
F. Combustible Materials Specification 5
G. Electrical Codes 5
H. California 5
I. Requirements for the Commonwealth of Massachusetts . . 6

2 Getting Started

A. Design and Installation Considerations 7
B. Good Faith Wall Surface 8
C. Tools and Supplies Needed 10
D. Inspect Appliance and Components 10

3 Framing and Clearances

A. Appliance/Decorative Barrier Front Dimension Diagrams 11
➔ B. Appliance Location and Clearances to Combustibles . . . 16
C. Constructing the Appliance Chase 26
D. Floor Protection 27
E. Vinyl Flooring 27

4 Termination Location and Vent Information

A. Approved Pipe 28
B. Vent Termination Minimum Clearances 28
C. Vent Terminal Clearances 30
D. Use of Elbows 31
E. Vent Diagrams 32

5 Vent Clearances and Vent Framing

A. Vent Clearances to Combustibles 40
B. Wall Penetration Framing/Firestops 41
C. Ceiling Firestop/Floor Penetration Framing 42
D. Install Attic Insulation Shield 42

6 Appliance Preparation

A. Top Standoff Preparation 43
➔ B. Prepare For Heat Management 44
C. Securing and Leveling the Appliance 45
D. Installing Non-Combustible Facing Material 46

7 Venting

A. Assemble Vent Sections (DVP Pipe Only) 47
B. Assemble Slip Sections 49
C. Secure the Vent Sections 49
D. Disassemble Vent Sections 50
E. Vertical Termination Requirements 51
F. Horizontal Termination Requirements 52

8 Electrical Information

A. General Information 54
B. Wiring Requirements 56

9 Gas Information

A. Fuel Conversion 58
B. Gas Pressure 58
C. Gas Service Access 58
D. Gas Connection 60
E. High Altitude Installations 60
F. Air Shutter Setting 61

10 Finishing

A. Facing Material 62
B. Drywall Installation 63
C. Decorative Barrier Fronts 66
D. Mantel and Wall Projections 71

11 Appliance Setup

A. Fixed Glass Assembly Removal and Replacement 74
B. Remove the Shipping Materials/Install Bottom Glass Shield 74
C. Clean the Appliance 75
D. Install Glass Refractory (Optional) 75
E. Install Log Set or Stones (Optional) 75
F. Install Media (Included) 75
G. IntelliFire Touch® Control System Setup 78
H. Install Decorative Barrier Front 78

12 Reference Materials

A. Vent Components Diagrams 79
B. Accessories 87

➔ = Contains updated information.

Installation Standard Work Checklist

ATTENTION INSTALLER:

Follow this Standard Work Checklist

This standard work checklist is to be used by the installer in conjunction with, not instead of, the instructions contained in this installation manual.

Customer: _____ **Date Installed:** _____

Lot/Address: _____ **Location of Fireplace:** _____

_____ **Installer:** _____

Model (circle one): ECHEL36IN-C ECHEL36STIN-C ECHEL48IN-C ECHEL48STIN-C ECHEL60IN-C ECHEL72IN-C

Dealer/Distributor Phone # _____

Serial #: _____

WARNING! Risk of Fire or Explosion! *Failure to install appliance according to these instructions can lead to a fire or explosion. Install ONLY components and accessories approved by Hearth & Home Technologies. Unapproved components and accessories could cause fireplace to overheat.*

Appliance Install Sections 3 and 6	**YES**	**IF NO, WHY?**
Verified that the chase is insulated and sealed. (Pg. 26)	☐	_____
Required factory included non-combustible board is installed. (Pg 46)	☐	_____
Standoffs bent up into installation position and secured. (Pg. 43)	☐	_____
Verified clearances to combustibles. (Pg. 16-25)	☐	_____
Fireplace is leveled and secured. (Pg. 45)	☐	_____
Verified clearance to header. (Pg. 18-19)	☐	_____
Heat management system(s) and/or power vent properly installed.	☐	_____
Venting/Chimney Sections 4,5 and 7		
Venting configuration complies to vent diagrams. (Pg 32-39)	☐	_____
Venting installed, locked, and secured in place with proper clearance. (May need to order separately.)	☐	_____
Firestops installed. (Section 5)	☐	_____
Attic insulation shield installed. (Pg 42)	☐	_____
Exterior wall/Roof flashing installed and sealed. (Section 7)	☐	_____
Terminations installed and sealed. (Section 7)	☐	_____
Electrical Section 8 (Pg 54-57)		
Unswitched power (110-120 VAC) provided to the appliance.	☐	_____
Switch wires properly installed.	☐	_____
Gas Section 9 (Pg 58-61)		
Proper appliance for fuel type.	☐	_____
Was a conversion performed?	☐	_____
Leak check performed and inlet pressure verified.	☐	_____
Verified proper air shutter setting for installation type.	☐	_____
Finishing Section 10 (Pg 62-73)		
Combustible materials not installed in non-combustible areas.	☐	_____
Verified all clearances meet installation manual requirements.	☐	_____
Finishing done correctly using inside fit or overlap fit method.	☐	_____
Bottom finishing template and finishing guards removed.	☐	_____
Mantels and wall projections comply with installation manual requirements.	☐	_____
Appliance Setup Section 11 (Pg 74-78)		
All packaging and protective materials removed (inside & outside of appliance).	☐	_____
Refractories and media installed correctly.	☐	_____
Glass assembly installed and secured.	☐	_____
Accessories installed properly.	☐	_____
Decorative barrier front properly installed. (May need to order separately.)	☐	_____
Manual bag and all of its contents are removed from inside/under the appliance and given to party responsible for use and operation.	☐	_____
Started appliance and verified no gas leaks exist.	☐	_____
Lights work in all switched positions (if so equipped).	☐	_____
Component heat shield is installed. (Pg. 56)	☐	_____

Hearth & Home Technologies recommends the following:

- Photographing the installation and copying this checklist for your file.
- That this checklist remain visible at all times on the appliance until the installation is complete.

Comments: Further description of the issues, who is responsible (Installer/ Builder/ Other Trades, etc) and corrective action needed _____

Comments Communicated to party responsible _____ by _____ on _____

(Builder / Gen. Contractor/) (Installer) (Date)

➔ = Contains updated information.

2608-982 Rev. F 4/23

1 Product Specific and Important Safety Information

A. Appliance Certification

MODEL: **ECHEL48IN-C, ECHEL60IN-C, ECHEL72IN-C**

LABORATORY: **Underwriters Laboratories, Inc. (UL)**

TYPE: **Direct Vent Heater**

STANDARD: **CSA / ANSI Z21.88-2019 • CSA 2.33-2019**

This product is listed to ANSI standards for "Vented Gas Fireplace Heaters" and applicable sections of "Gas Burning Heating Appliances for Manufactured Homes and Recreational Vehicles", and "Gas Fired Appliances for Use at High Altitudes". Also Certified for Installation in a Bedroom or a Bedsitting Room.

NOTICE: *This installation must conform with local codes. In the absence of local codes you must comply with the National Fuel Gas Code, ANSI Z223.1-latest edition in the U.S.A. and the CAN/CGA B149 Installation Codes in Canada.*

NOT INTENDED FOR USE AS A PRIMARY HEAT SOURCE. This appliance is tested and approved as either supplemental room heat or as a decorative appliance. It should not be factored as primary heat in residential heating calculations.

MODEL: **ECHEL36IN-C, ECHEL36STIN-C, ECHEL48STIN-C**

LABORATORY: **Underwriters Laboratories, Inc. (UL)**

TYPE: **Decorative Gas Appliances**

STANDARD: **CSA / ANSI Z21.50-2019 • CSA 2.22-2019**

This product is listed to ANSI standards for "Vented Decorative Gas Appliances" (and "Gas Fired Appliances for Use at High Altitudes".) Also Certified for Installation in a Bedroom or a Bedsitting Room. for Installation in a Bedroom or a Bedsitting Room.

NOT INTENDED FOR USE AS A HEAT SOURCE.
This appliance is decorative in nature and not intended to be a source of heat.

NOT FOR USE WITH SOLID FUEL.
This appliance is not intended to burn solid fuel.

NOT FOR USE WITH THERMOSTAT.

C. BTU Specifications

Models *(U.S. or Canada)*		Maximum Input BTU/h	Minimum Input BTU/h	Orifice Size (DMS)
ECHEL36IN-C (NG)	*(0-2000 FT)*	30,000	17,500	#36
ECHEL36IN-C (Propane)	*(0-2000 FT)*	27,000	15,000	#52
ECHEL36STIN-C (NG)	*(0-2000 FT)*	30,000	17,500	#36
ECHEL36STIN-C (Propane)	*(0-2000 FT)*	27,000	15,000	#52
ECHEL48IN-C (NG)	*(0-2000 FT)*	40,000	21,000	.124
ECHEL48IN-C (Propane)	*(0-2000 FT)*	34,000	20,000	#50
ECHEL48STIN-C (NG)	*(0-2000 FT)*	40,000	21,000	.124
ECHEL48STIN-C (Propane)	*(0-2000 FT)*	34,000	20,000	#50
ECHEL60IN-C (NG)	*(0-2000 FT)*	50,000	28,000	#28
ECHEL60IN-C (Propane)	*(0-2000 FT)*	37,500	20,000	#49
ECHEL72IN-C (NG)	*(0-2000 FT)*	58,000	30,000	#23
ECHEL72IN-C (Propane)	*(0-2000 FT)*	45,000	25,000	#46

D. High Altitude Installations

NOTICE: *If the heating value of the gas has been reduced, these rules do not apply. Check with your local gas utility or authorities having jurisdiction.*

When installing above 2000 feet elevation:

- In the USA: Reduce input rate 4% for each 1000 feet above 2000 feet.
- In CANADA: Input ratings are certified without a reduction of input rate for elevations up to 4500 feet (1370 m) above sea level. Please consult provincial and/or local authorities having jurisdiction for installations at elevations above 4500 feet (1370 m).

Check with your local gas utility to determine proper orifice size.

E. Non-Combustible Materials Specification

Material which will not ignite and burn. Such materials are those consisting entirely of steel, iron, brick, tile, concrete, slate, glass or plasters, or any combination thereof.

Materials that are reported as passing **ASTM E 136, Standard Test Method for Behavior of Materials in a Vertical Tube Furnace at 750 ºC** shall be considered non-combustible materials.

F. Combustible Materials Specification

Materials made of or surfaced with wood, compressed paper, plant fibers, plastics, or other material that can ignite and burn, whether flame proofed or not, or plastered or unplastered shall be considered combustible materials.

G. Electrical Codes

NOTICE: *This appliance must be electrically wired and grounded in accordance with local codes or, in the absence of local codes, with* **National Electric Code ANSI/NFPA 70-latest edition** *or the* **Canadian Electric Code CSA C22.1.**

- A 110-120 VAC circuit for this product must be protected with ground-fault circuit interrupter protection, in compliance with the applicable electrical codes, when it is installed in locations such as in bathrooms or near sinks.

H. California

WARNING: This product and the fuels used to operate this product (liquid propane or natural gas), and the products of combustion of such fuels, can expose you to chemicals including benzene, which is known to the State of California to cause cancer and reproductive harm. For more information go to: www.P65Warnings.ca.gov.

Note: The following requirements reference various Massachusetts and national codes not contained in this document.

I. Requirements for the Commonwealth of Massachusetts

For all side wall horizontally vented gas fueled equipment installed in every dwelling, building or structure used in whole or in part for residential purposes, including those owned or operated by the Commonwealth and where the side wall exhaust vent termination is less than seven (7) feet above finished grade in the area of the venting, including but not limited to decks and porches, the following requirements shall be satisfied:

Installation of Carbon Monoxide Detectors

At the time of installation of the side wall horizontal vented gas fueled equipment, the installing plumber or gas fitter shall observe that a hard wired carbon monoxide detector with an alarm and battery back-up is installed on the floor level where the gas equipment is to be installed. In addition, the installing plumber or gas fitter shall observe that a battery operated or hard wired carbon monoxide detector with an alarm is installed on each additional level of the dwelling, building or structure served by the side wall horizontal vented gas fueled equipment. It shall be the responsibility of the property owner to secure the services of qualified licensed professionals for the installation of hard wired carbon monoxide detectors.

In the event that the side wall horizontally vented gas fueled equipment is installed in a crawl space or an attic, the hard wired carbon monoxide detector with alarm and battery back-up may be installed on the next adjacent floor level.
In the event that the requirements of this subdivision can not be met at the time of completion of installation, the owner shall have a period of thirty (30) days to comply with the above requirements; provided, however, that during said thirty (30) day period, a battery operated carbon monoxide detector with an alarm shall be installed.

Approved Carbon Monoxide Detectors

Each carbon monoxide detector as required in accordance with the above provisions shall comply with NFPA 720 and be ANSI/UL 2034 listed and IAS certified.

Signage

A metal or plastic identification plate shall be permanently mounted to the exterior of the building at a minimum height of eight (8) feet above grade directly in line with the exhaust vent terminal for the horizontally vented gas fueled heating appliance or equipment. The sign shall read, in print size no less than one-half (1/2) in. in size, **"GAS VENT DIRECTLY BELOW. KEEP CLEAR OF ALL OBSTRUCTIONS".**

Inspection

The state or local gas inspector of the side wall horizontally vented gas fueled equipment shall not approve the installation unless, upon inspection, the inspector observes carbon monoxide detectors and signage installed in accordance with the provisions of 248 CMR 5.08(2)(a)1 through 4.

Exemptions

The following equipment is exempt from 248 CMR 5.08(2)(a)1 through 4:

- The equipment listed in Chapter 10 entitled "Equipment Not Required To Be Vented" in the most current edition of NFPA 54 as adopted by the Board; and
- Product Approved side wall horizontally vented gas fueled equipment installed in a room or structure separate from the dwelling, building or structure used in whole or in part for residential purposes.

MANUFACTURER REQUIREMENTS

Gas Equipment Venting System Provided

When the manufacturer of Product Approved side wall horizontally vented gas equipment provides a venting system design or venting system components with the equipment, the instructions provided by the manufacturer for installation of the equipment and the venting system shall include:

- Detailed instructions for the installation of the venting system design or the venting system components; and
- A complete parts list for the venting system design or venting system.

Gas Equipment Venting System NOT Provided

When the manufacturer of a Product Approved side wall horizontally vented gas fueled equipment does not provide the parts for venting the flue gases, but identifies "special venting systems", the following requirements shall be satisfied by the manufacturer:

- The referenced "special venting system" instructions shall be included with the appliance or equipment installation instructions; and
- The "special venting systems" shall be Product Approved by the Board, and the instructions for that system shall include a parts list and detailed installation instructions.

A copy of all installation instructions for all Product Approved side wall horizontally vented gas fueled equipment, all venting instructions, all parts lists for venting instructions, and/or all venting design instructions shall remain with the appliance or equipment at the completion of the installation.

See Gas Connection section for additional Commonwealth of Massachusetts requirements.

2 Getting Started

A. Design and Installation Considerations

WARNING! Risk of Fire or Explosion! *Read all instructions before starting the installation.*

Majestic direct vent gas appliances are designed to operate with all combustion air siphoned from outside of the building and all exhaust gases expelled to the outside. No additional outside air source is required.

Installation MUST comply with local, regional, state and national codes and regulations. Consult insurance carrier, local building inspector, fire officials or authorities having jurisdiction over restrictions, installation inspection and permits.

Before installing, determine the following:

- Where the appliance is to be installed.
- The vent system configuration to be used. If Passive Heat will be installed, consider location of discharge opening in relation to venting and other construction materials.
- Gas supply piping requirements.
- Provisions for optional heat management system(s).
- Electrical wiring requirements.
- Framing and finishing details.
- Whether optional accessories—devices such as a fan, wall switch, or remote control—are desired.

Installation and service of this appliance should be performed by qualified personnel. Hearth & Home Technologies recommends NFI certified professionals.

NFI NATIONAL FIREPLACE INSTITUTE® A CERTIFICATION AGENCY

Improper installation, adjustment, alteration, service or maintenance can cause injury or property damage. For assistance or additional information, consult a qualified service technician, service agency or your dealer.

B. Good Faith Wall Surface

The ECHELON-C models may be installed with or without optional heat management systems, including the Passive Heat kit. The installation of a heat management system will affect certain aspects of the appliance installation including framing dimensions and clearances to combustibles. Note that Figure 2.3 in this section refers to the wall surface temperatures when the Passive Heat kit is installed.

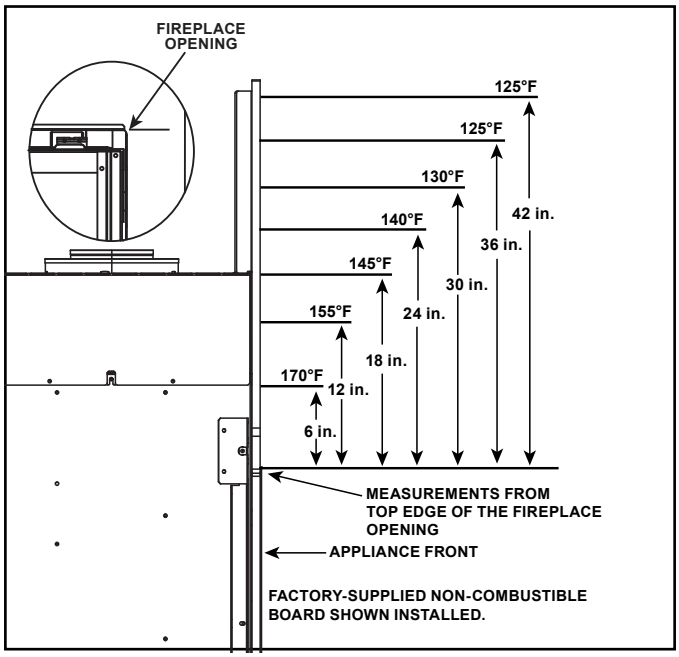

Figure 2.1 Good Faith Wall Surface Temperatures Above Appliance (ECHEL36IN-C/ECHEL36STIN-C, ECHEL48IN-C, ECHEL48STIN-C)

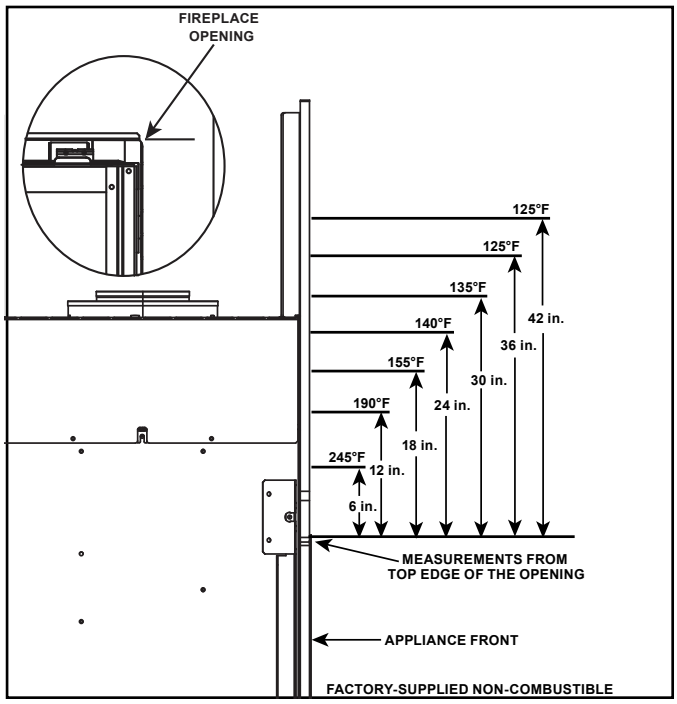

Figure 2.2 Good Faith Wall Surface Temperatures Above Appliance (ECHEL60IN-C, ECHEL72IN-C)

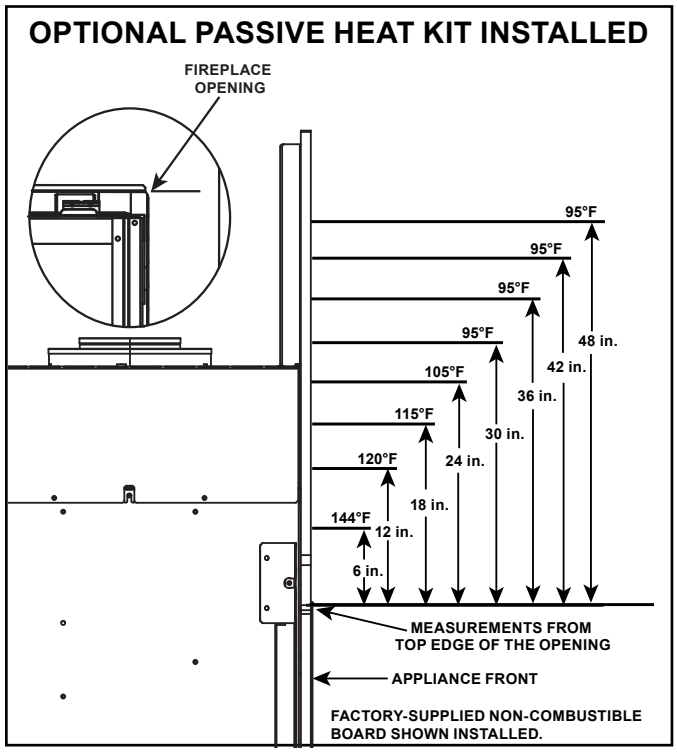

Figure 2.3 Good Faith Wall Surface Temperatures Above Appliance with Passive Heat Kit Installed

NOTICE: *Surface temperatures listed above are taken with a temperature measuring probe as prescribed by the test standard used for appliance certification. Temperatures on walls or mantels taken with an infrared thermometer may yield increased temperatures of up to 30 °F (17 °C) or more depending on the thermometer settings and material characteristics being measured. Use appropriate finishing materials that are able to withstand these conditions. For additional finishing guidelines, see Section 10.*

If installing a television (TV) above the appliance, see Figure 2.4. For installations with the Passive Heat kit, refer to Section 10, Figure 10.19.

Good Faith Guidelines for TV Installations Above Appliance

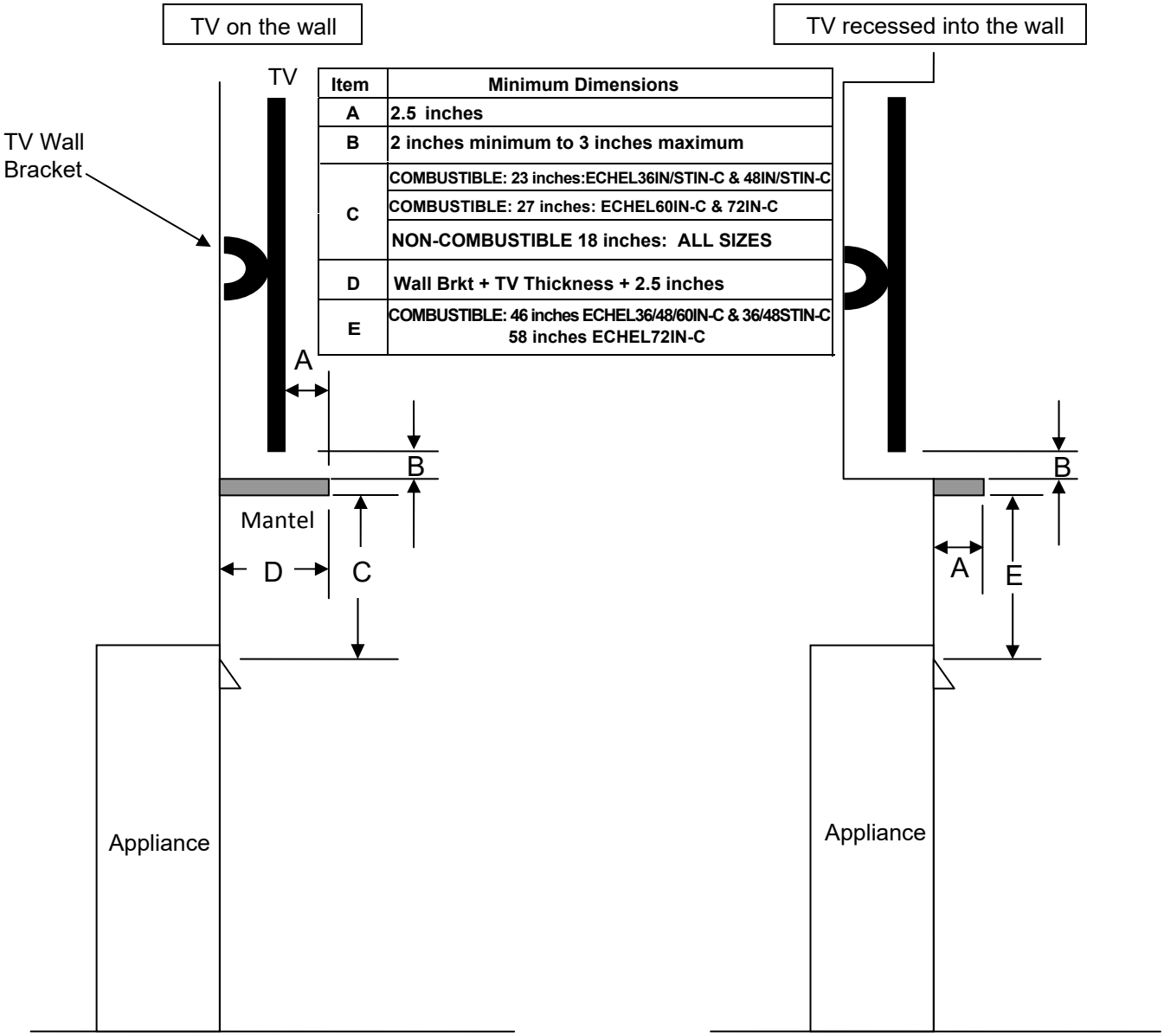

Item	Minimum Dimensions
A	2.5 inches
B	2 inches minimum to 3 inches maximum
C	COMBUSTIBLE: 23 inches:ECHEL36IN/STIN-C & 48IN/STIN-C
	COMBUSTIBLE: 27 inches: ECHEL60IN-C & 72IN-C
	NON-COMBUSTIBLE 18 inches: ALL SIZES
D	Wall Brkt + TV Thickness + 2.5 inches
E	COMBUSTIBLE: 46 inches ECHEL36/48/60IN-C & 36/48STIN-C 58 inches ECHEL72IN-C

Notes:

1. These are good faith recommended clearances only and not a guarantee of compliance with all TV manufacturers' maximim allowable operating temperatures.
2. Since every home has unique air flow characteristics and maximum allowable operating temperatures can vary from manufacturer to manufacturer and from model to model, actual TV temperatures should be validated at the time of each installation. TVs should not be used in situations where the actual TV temperature exceeds the manufacturers' maximum allowable operating temperatures identified in the TV's technical specifications. Contact the TV's manufacturer directly if you cannot locate this information or have questions regarding the information.
3. Mantel height and depth must conform to mantel requirements specified in the fireplace installation manual.
4. "C" and "E" dimensions taken from the top of the hood or fireplace opening.
5. Suggestions on how to further reduce TV temperatures:
   a. Increase "A" dimension.
   b. Increase "C" and "E" dimension, however, increasing "B" dimension beyond maximum recommended typically results in higher temperatures.

Figure 2.4 Good Faith TV Guidelines

C. Tools and Supplies Needed

Before beginning the installation be sure that the following tools and building supplies are available.

Hand Tools	Tape measure
Level	Framing material
Manometer	Framing square
Voltmeter	Electric drill and bits (1/4 in.)
Plumb line	Safety glasses/Gloves
Wrenches	Reciprocating saw

1/4 in. nut driver

Non-corrosive leak check solution

1/2 - 3/4 in. length, #6 or #8 Self-drilling screws

Caulking material (300 ºF minimum continuous exposure rating)

D. Inspect Appliance and Components

WARNING! Risk of Fire or Explosion! *Damaged parts could impair safe operation.* ***DO NOT i****nstall damaged, incomplete or substitute components. Keep appliance dry.*

WARNING! Risk of Fire, Explosion or Electric Shock! DO NOT *use this appliance if any part has been under water. Call a qualified service technician to inspect the appliance and to replace any part of the control system and/or gas control which has been under water.*

- Carefully remove the appliance and components from the packaging.
- The vent system components and decorative barrier fronts may be shipped in separate packages.
- If packaged separately, the media, refractory, non-combustible board and/or optional log kits must be installed.
- Report to your dealer any parts damaged in shipment, particularly the condition of the glass.
- This product is factory-equipped with an IntelliFire Touch® remote control, which was paired to the appliance at the factory. This specific remote control needs to remain with the contents of the manual bag. Do not install batteries in the remote control until performing the final appliance setup and checklist.

Hearth & Home Technologies disclaims any responsibility for, and the warranty will be voided by, the following actions:

- Installation and use of any damaged appliance or vent system component.
- Modification of the appliance or vent system.
- Installation other than as instructed by Hearth & Home Technologies.
- Improper positioning of the logs/media (as applicable) or the glass assembly.
- Installation and/or use of any component part not approved by Hearth & Home Technologies.

3 Framing and Clearances

A. Appliance/Decorative Barrier Front Dimension Diagrams

Dimensions are actual appliance dimensions. Use for reference only. For framing dimensions and clearances refer to Section 5.

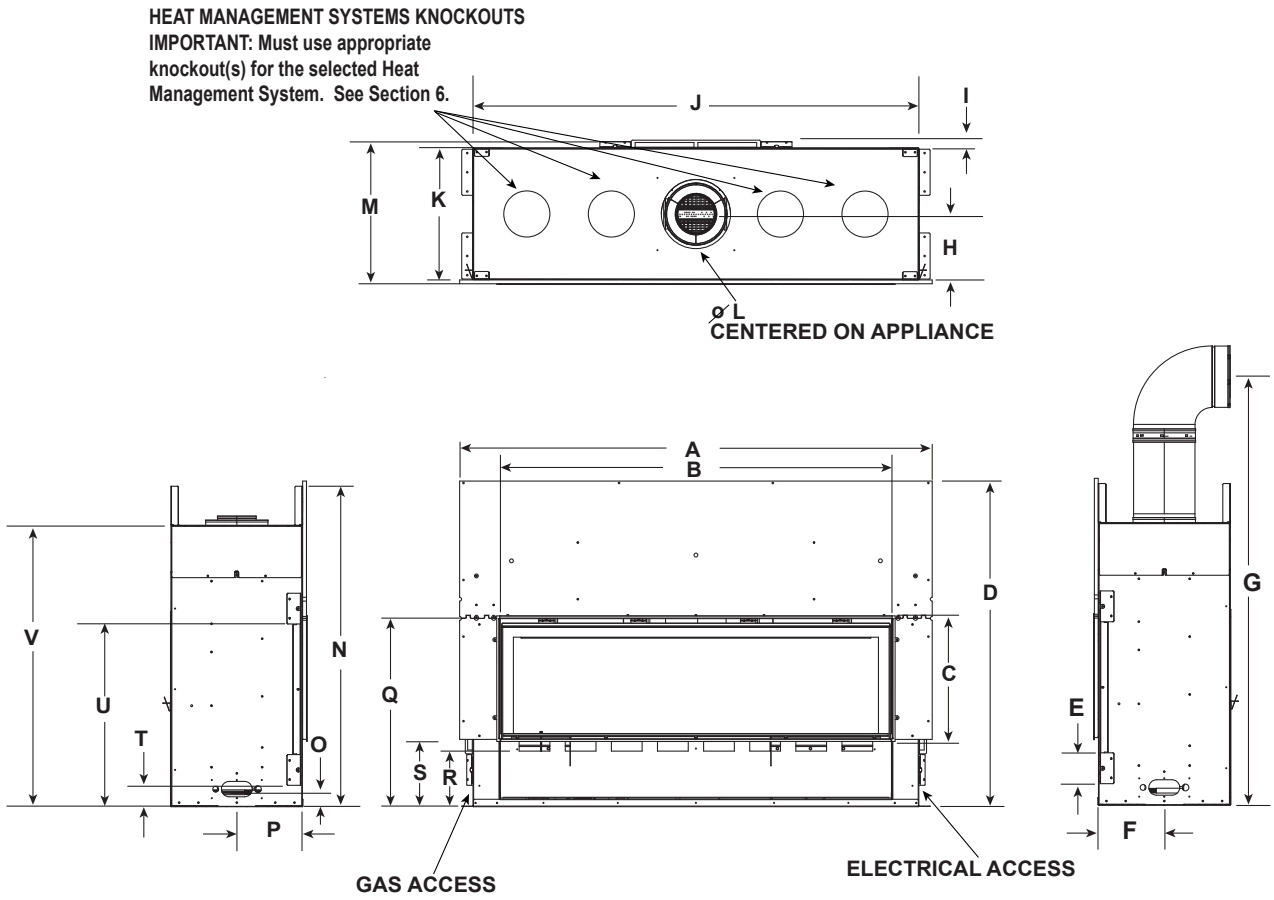

Location	ECHEL36IN-C		ECHEL48IN-C	
	Inches	Millimeters	Inches	Millimeters
A	49-1/2	1257	61-1/2	1562
B	39-1/4	997	51-1/8	1299
C	15-5/8	397	15-5/8	397
D	42-1/2	1080	42-1/2	1080
E	4	102	4	102
F	8-9/16	218	8-9/16	218
G	63	1600	63	1600
H	8-9/16	218	8-9/16	218
I	1	25	1	25
J	46-3/16	1173	58	1473
K	17-1/8	435	17-1/8	435

Location	ECHEL36IN-C		ECHEL48IN-C	
	Inches	Millimeters	Inches	Millimeters
L	8	203	8	203
M	18-5/8	473	18-5/8	473
N	41-3/4	1061	41-3/4	1061
O	2-3/8	60	2-3/8	60
P	8-9/16	218	8-9/16	218
Q	24-1/2	622	24-1/2	622
R	7-1/4	184	7-1/4	184
S	8-7/8	225	8-7/8	225
T	2-3/4	70	2-3/4	70
U	23-3/4	603	23-3/4	603
V	36-5/8	930	36-5/8	930

Figure 3.1 Appliance Dimensions - ECHEL36IN-C, ECHEL48IN-C

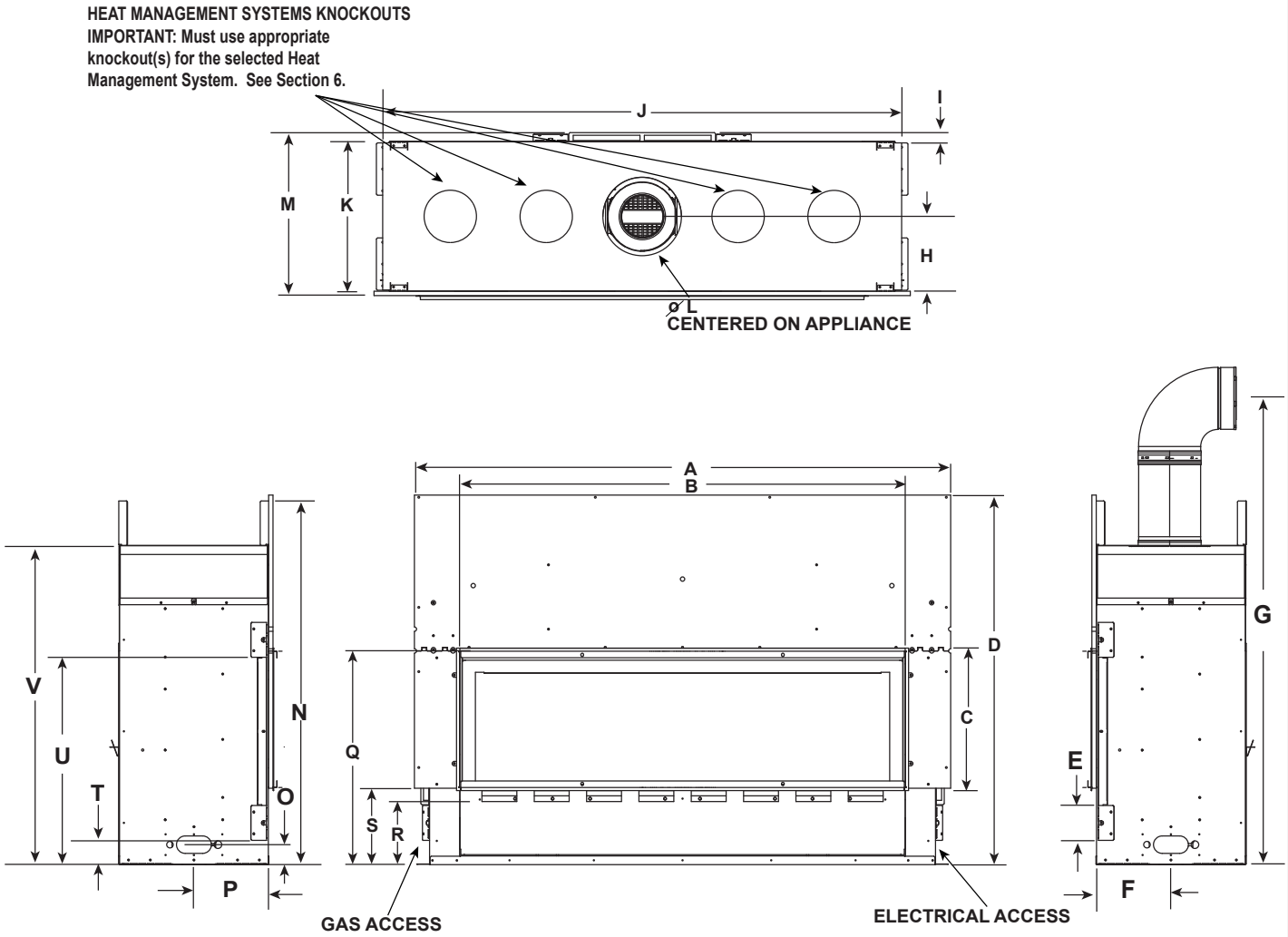

Location	ECHEL60IN-C		ECHEL72IN-C	
	Inches	Millimeters	Inches	Millimeters
A	74	1880	86	2184
B	63-1/8	1603	75-1/8	1908
C	15-5/8	397	15-5/8	397
D	48-1/2	1232	48-1/2	1232
E	4	102	4	102
F	8-9/16	218	8-9/16	218
G	63	1600	75	1905
H	8-9/16	218	8-9/16	218
I	1	25	1	25
J	70	1778	82	2083
K	17-1/8	435	17-1/8	435

Location	ECHEL60IN-C		ECHEL72IN-C	
	Inches	Millimeters	Inches	Millimeters
L	8	203	8	203
M	18-5/8	473	18-5/8	473
N	47-3/4	1213	47-3/4	1213
O	2-3/8	60	2-3/8	60
P	8-9/16	218	8-9/16	218
Q	24-1/2	622	24-1/2	622
R	7-1/4	184	N/A	N/A
S	8-7/8	225	8-7/8	225
T	2-3/4	70	2-3/4	70
U	23-3/4	603	23-3/4	603
V	36-1/2	927	36-1/2	927

Figure 3.2 Appliance Dimensions - ECHEL60IN-C, ECHEL72IN-C

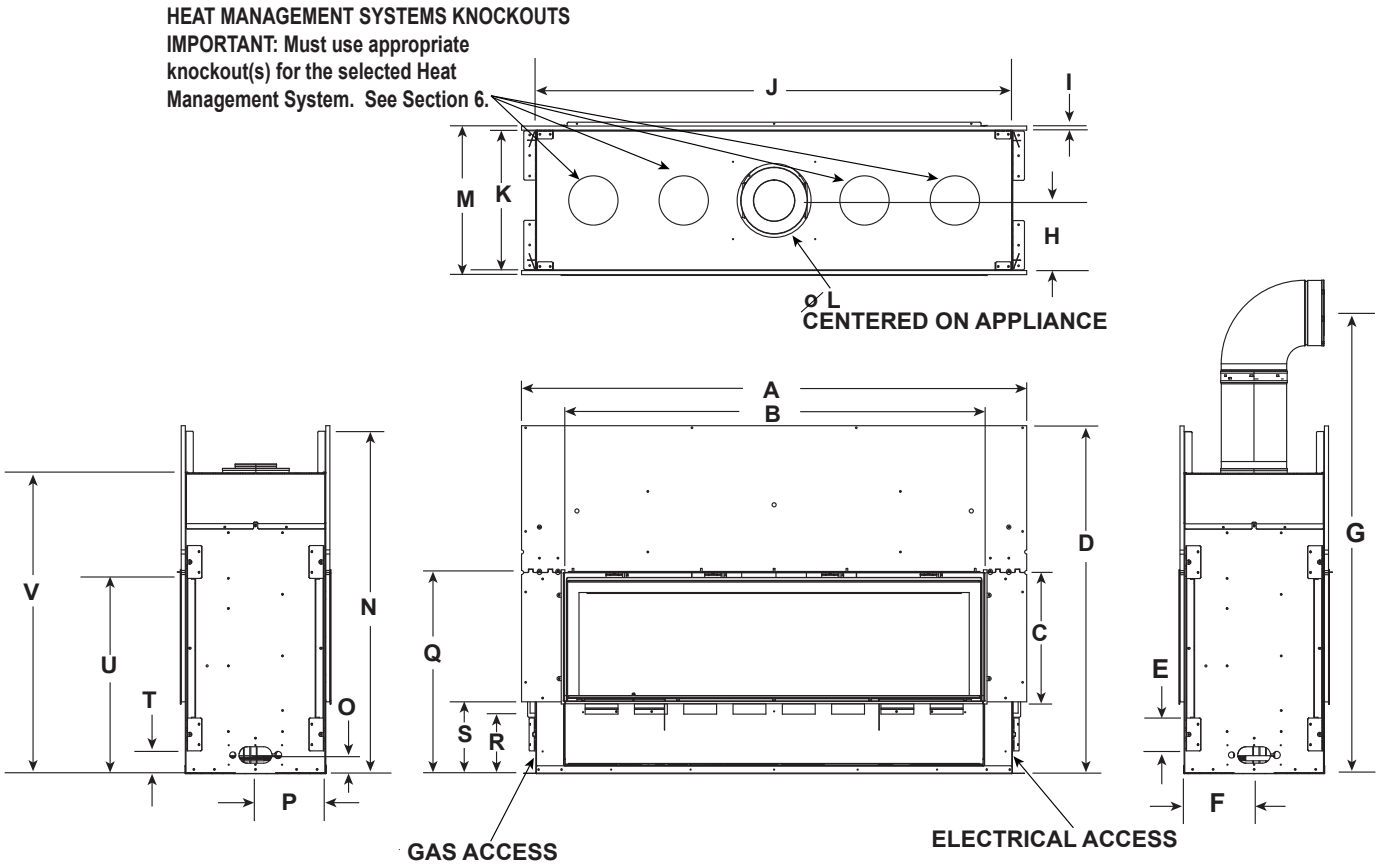

Location	ECHEL36STIN-C		ECHEL48STIN-C	
	Inches	Millimeters	Inches	Millimeters
A	50	1270	62	1575
B	39-1/4	997	51-1/8	1299
C	15-5/8	397	15-5/8	397
D	42-1/2	1080	42-1/2	1080
E	4	102	4	102
F	8-9/16	218	8-9/16	218
G	63	1600	63	1600
H	8-9/16	218	8-9/16	218
I	1/2	13	1/2	13
J	46-3/16	1173	58	1473
K	17-1/8	435	17-1/8	435

Location	ECHEL36STIN-C		ECHEL48STIN-C	
	Inches	Millimeters	Inches	Millimeters
L	8	203	8	203
M	18-1/8	460	18-1/8	460
N	41-3/4	1061	41-3/4	1061
O	2-3/8	60	2-3/8	60
P	8-9/16	218	8-9/16	218
Q	24-1/2	622	24-1/2	622
R	7-1/4	184	7-1/4	184
S	8-7/8	225	8-7/8	225
T	2-3/4	70	2-3/4	70
U	23-3/4	603	23-3/4	603
V	36-1/2	927	36-1/2	927

Figure 3.3 Appliance Dimensions - ECHEL36STIN-C, ECHEL48STIN-C

PFF DECORATIVE FRONT

Note: See Section 10 for hearth, mantel and finishing requirements.

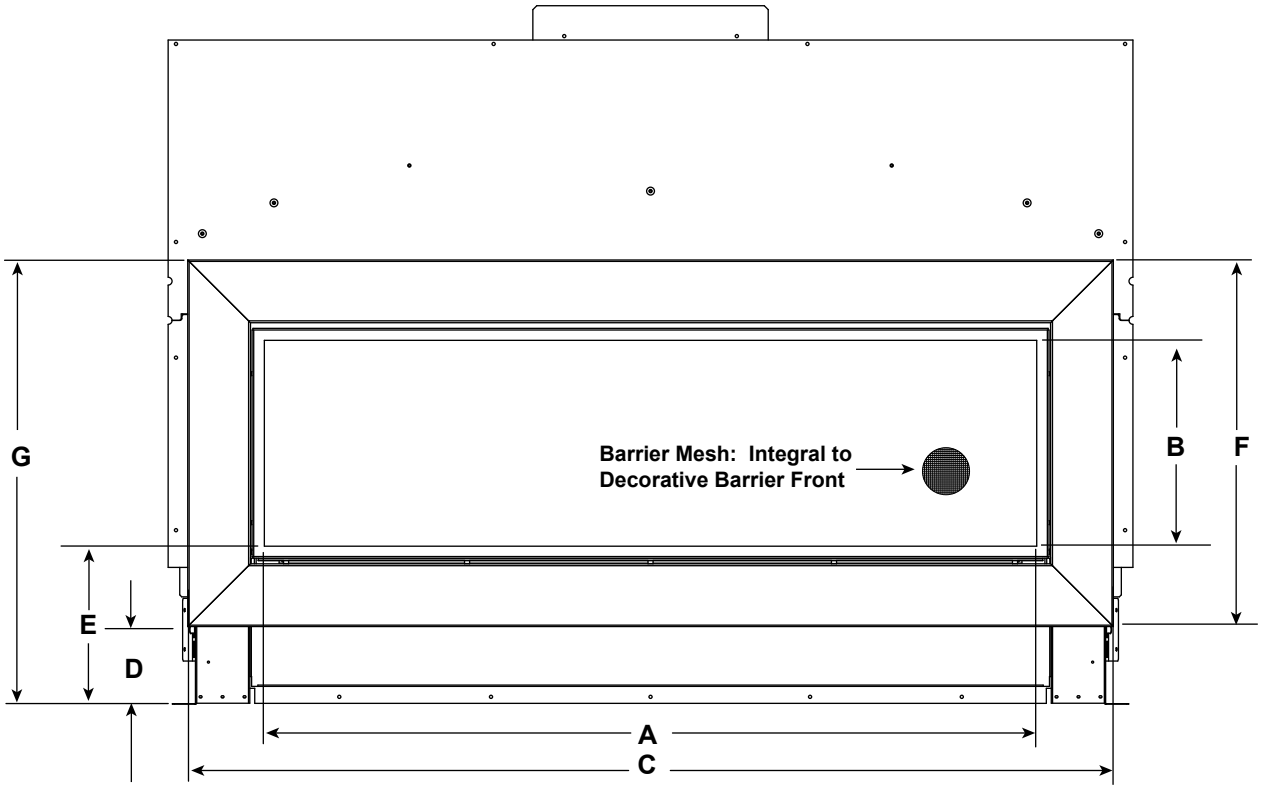

Location	ECHEL36IN-C ECHEL36STIN-C		ECHEL48IN-C ECHEL48STIN-C		ECHEL60IN-C	
	Inches	Millimeters	Inches	Millimeters	Inches	Millimeters
A	37-1/4	946	49-1/4	1250	61-1/4	1556
B	13-1/8	333	13-1/8	333	13-1/8	333
C	47	1194	59	1498	71	1803
D	4-15/16	126	4-15/16	126	4-15/16	126
E	10-1/16	256	10-1/16	256	10-1/16	256
F	23-3/8	594	23-3/8	594	23-3/8	594
G	28-5/16	719	28-5/16	719	28-5/16	719

The PFF decorative front has an installed depth of 3/4 in. (19 mm), measured from the front of the non-combustible finishing material to the front of the decorative front.

Figure 3.4 Picture Frame Front Dimensions

CLEAN FACE TRIM DECORATIVE BARRIER FRONT

Note: See Section 10 for hearth, mantel and finishing requirements.

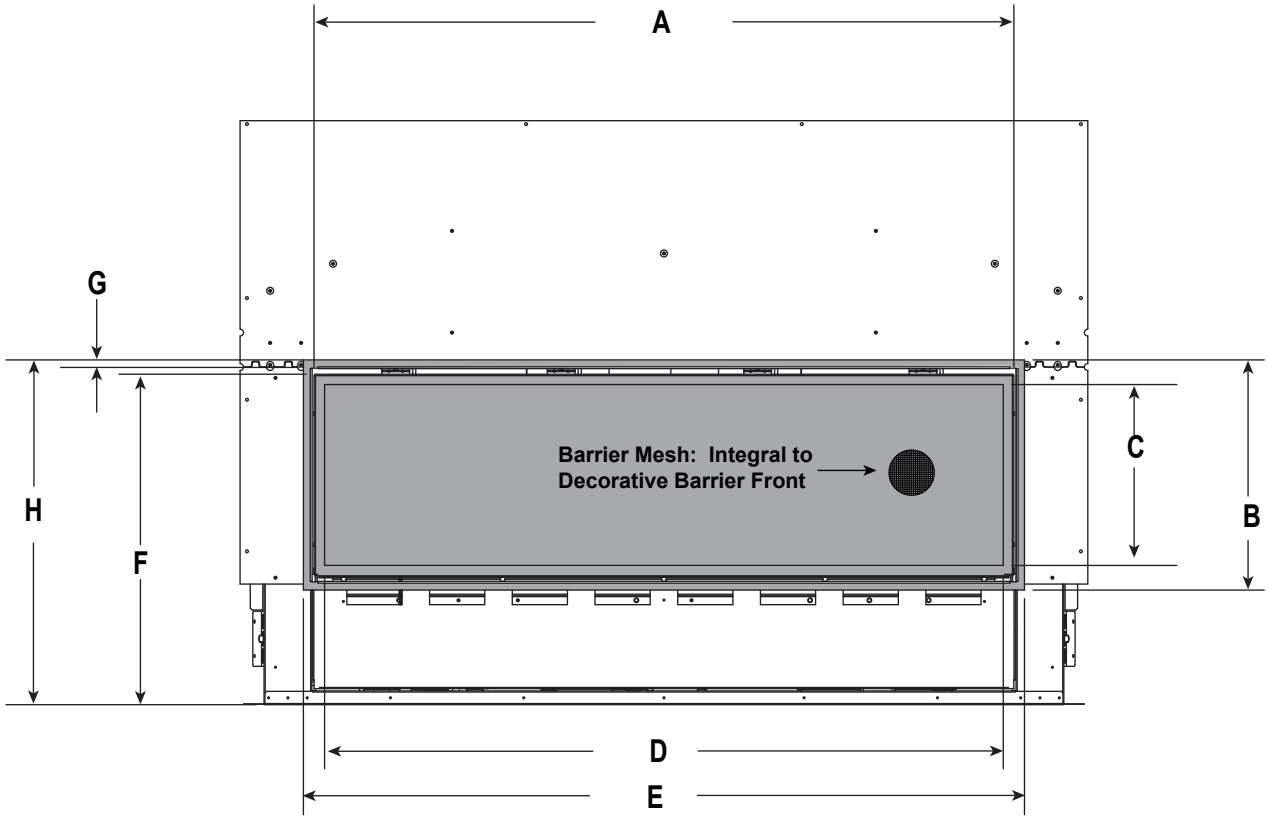

Location	ECHEL36IN-C ECHEL36STIN-C		ECHEL48IN-C ECHEL48STIN-C		ECHEL60IN-C		ECHEL72IN-C	
	Inches	Millimeters	Inches	Millimeters	Inches	Millimeters	Inches	Millimeters
A	39	991	51	1295	63	1600	75	1905
B	16-3/4	425	16-3/4	425	16-3/4	425	16-3/4	425
C	13-1/8	333	13-1/8	333	13-1/8	333	13-1/8	333
D	37-3/16	945	49-3/16	1249	61-3/16	1554	73-3/16	1859
E	40-5/16	1024	52-5/16	1329	64-5/16	1634	76-5/16	1938
F	24	610	24	610	24	610	24	610
G	5/8	16	5/8	16	5/8	16	5/8	16
H	25	635	25	635	25	635	25	635

Figure 3.5 Clean Face Trim Front (Inside Fit) Decorative Barrier Front Dimensions

B. Appliance Location and Clearances to Combustibles

When selecting a location for the appliance it is important to consider the required clearances to walls and allow sufficient clearance for heat management systems venting. See Figure 3.6 and Figure 3.7.

WARNING! Risk of Fire or Burns! *Provide adequate clearance around air openings and for service access. Due to high temperatures, the appliance should be located out of traffic and away from furniture and draperies.*

NOTICE: *Illustrations reflect typical installations and are FOR DESIGN PURPOSES ONLY. Illustrations/diagrams are not drawn to scale. Actual installation may vary due to individual design preference.*

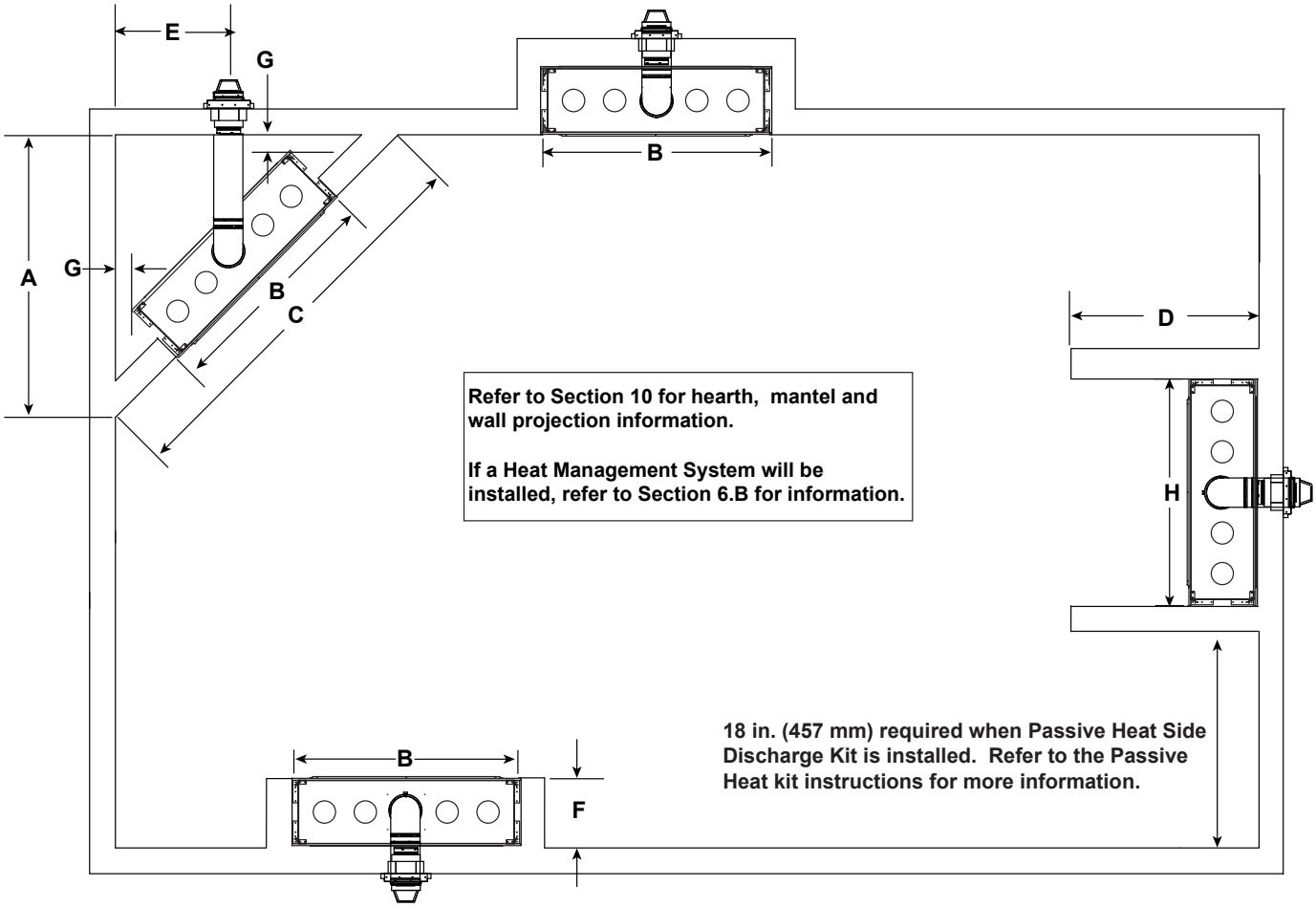

Model		A	B	C	D	E	F	G	H
ECHEL36IN-C	Inches	62-1/2	48-1/4	88-1/8	See Section 10, Figure 10.17 and 10.18.	24-1/2	18-3/4	1	50
	Millimeters	1588	1226	2238		622	476	25	1270
ECHEL48IN-C	Inches	70-3/4	60-1/4	100-3/8		28-1/2	18-3/4	1	62
	Millimeters	1797	1530	2550		724	476	25	1575
ECHEL60IN-C	Inches	79-1/2	72-1/4	112-3/8		31-3/4	18-3/4	1	74
	Millimeters	2019	1835	2854		807	476	25	1880
ECHEL72IN-C	Inches	88	84-1/4	124-3/8		35-1/4	18-3/4	1	86
	Millimeters	2235	2140	3159		895	476	25	2184

Figure 3.6 Appliance Locations: ECHELON-C Single-Sided Models

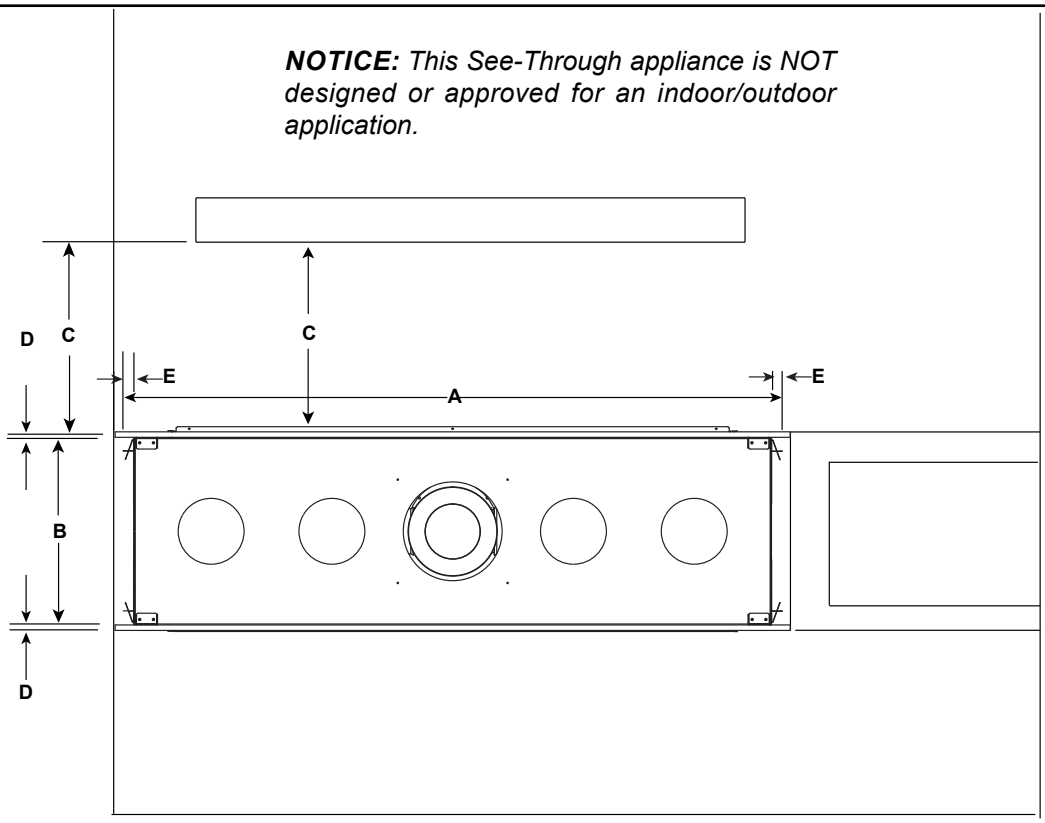

MODEL		A	B	C	D	E
ECHEL36STIN-C	Inches	48-1/4	17-1/8	48	1/2	1
	Millimeters	1226	435	1219	13	25
ECHEL48STIN-C	Inches	60-1/4	17-1/8	48	1/2	1
	Millimeters	1530	435	1219	13	25

Figure 3.7 Appliance Locations: ECHELON-C See-Through Models

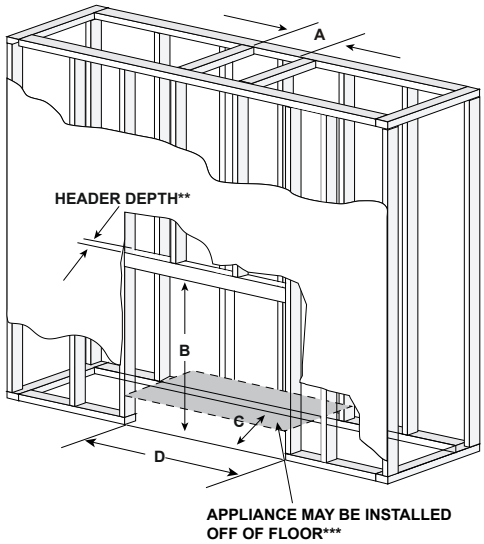

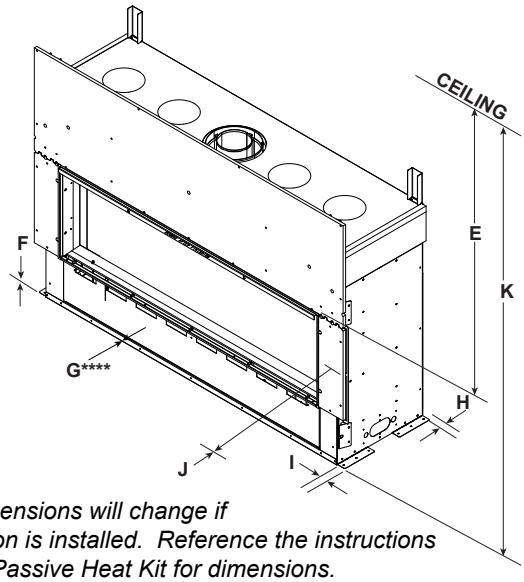

NOTE: *E & K dimensions will change if Passive Heat option is installed. Reference the instructions included with the Passive Heat Kit for dimensions.*

MINIMUM FRAMING DIMENSIONS*											
ECHEL36IN-C	A	B	C	D	E	F	G****	H	I	J	K
	Rough Opening (Vent Pipe)	Rough Opening (Height)	Rough Opening (Depth)	Rough Opening (Width)	Clearance to Ceiling	Combustible Floor	Combustible Flooring	Behind Appliance	Sides of Appliance	Front of Appliance	Clearance to Ceiling
Inches	10	42	18-1/4	48-1/4	31	0	0	1	1	48	55-1/2
Millimeters	254	1067	464	1226	787	0	0	25	25	1219	1410

MINIMUM FRAMING DIMENSIONS*											
ECHEL48IN-C	A	B	C	D	E	F	G****	H	I	J	K
	Rough Opening (Vent Pipe)	Rough Opening (Height)	Rough Opening (Depth)	Rough Opening (Width)	Clearance to Ceiling	Combustible Floor	Combustible Flooring	Behind Appliance	Sides of Appliance	Front of Appliance	Clearance to Ceiling
Inches	10	42	18-1/4	60-1/4	31	0	0	1	1	48	55-1/2
Millimeters	254	1067	464	1530	787	0	0	25	25	1219	1410

MINIMUM FRAMING DIMENSIONS*											
ECHEL60IN-C	A	B	C	D	E	F	G****	H	I	J	K
	Rough Opening (Vent Pipe)	Rough Opening (Height)	Rough Opening (Depth)	Rough Opening (Width)	Clearance to Ceiling	Combustible Floor	Combustible Flooring	Behind Appliance	Sides of Appliance	Front of Appliance	Clearance to Ceiling
Inches	10	48	18-1/4	72-1/4	31	0	0	1	1	48	55-1/2
Millimeters	254	1219	464	1835	787	0	0	25	25	1219	1410

MINIMUM FRAMING DIMENSIONS*											
ECHEL72IN-C	A	B	C	D	E	F	G****	H	I	J	K
	Rough Opening (Vent Pipe)	Rough Opening (Height)	Rough Opening (Depth)	Rough Opening (Width)	Clearance to Ceiling	Combustible Floor	Combustible Flooring	Behind Appliance	Sides of Appliance	Front of Appliance	Clearance to Ceiling
Inches	10	48	18-1/4	84-1/4	31	0	0	1	1	48	55-1/2
Millimeters	254	1219	464	2140	787	0	0	25	25	1219	1410

* = Adjust framing dimensions for interior sheathing (such as sheetrock)
**= If header depth exceeds 3-1/2 inches, notching may be required to maintain clearances to pipe.
***= If appliance is installed off of floor, maintain required clearances to combustibles.
Construct platform in accordance with local building codes.
****= For installations with vinyl flooring, see Section 3.E.

Figure 3.8 Clearances to Combustibles-ECHEL36IN-C, ECHEL48IN-C, ECHEL60IN-C, ECHEL72IN-C

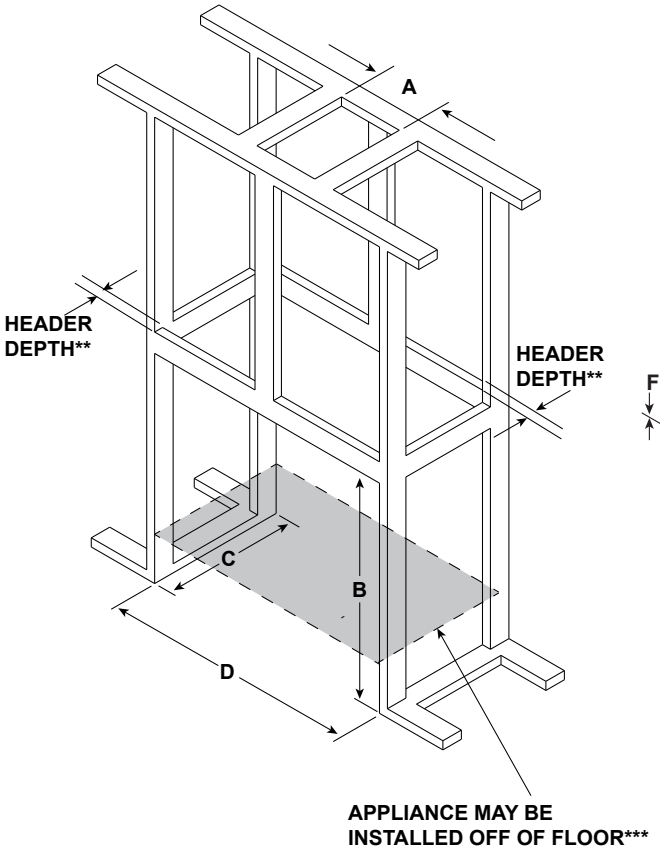

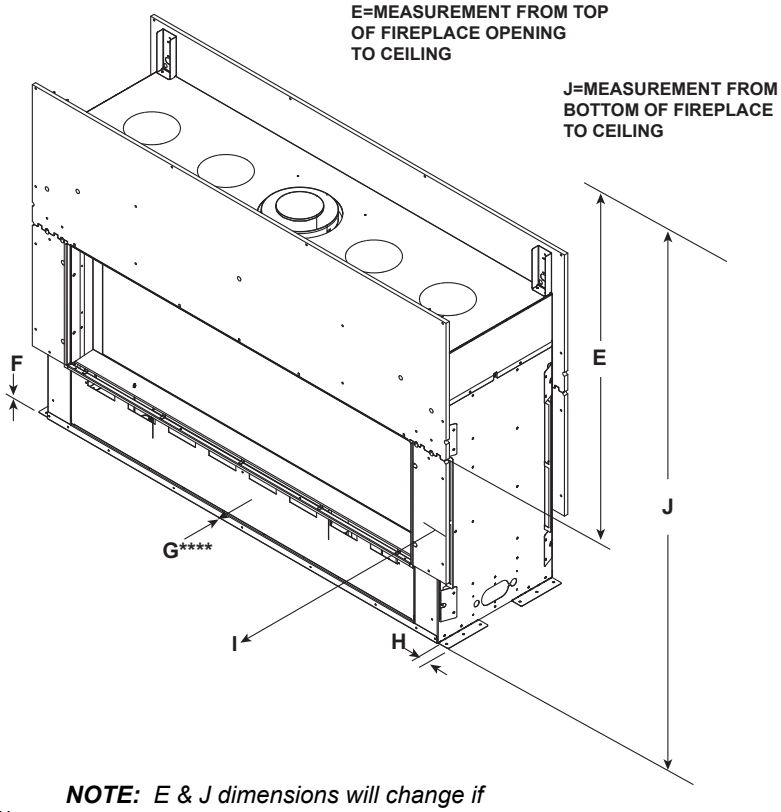

NOTE: *E & J dimensions will change if Passive Heat option is installed. Reference the instructions included with the Passive Heat Kit for dimensions.*

MINIMUM FRAMING DIMENSIONS*											
		A	B	C	D	E	F	G****	H	I	J
		Rough Opening (Vent Pipe)	Rough Opening (Height)	Rough Opening (Depth)	Rough Opening (Width)	Clearance to Ceiling	Combustible Floor	Combustible Flooring	Sides of Appliance	Front or Rear of Appliance	Clearance to Ceiling
ECHEL36STIN-C	in.	10	42	17	48-1/4	31	0	0	1	48	55-1/2
	mm	254	1067	432	1226	787	0	0	25	1219	1410
ECHEL48STIN-C	in.	10	42	17	60-1/4	31	0	0	1	48	55-1/2
	mm	254	1067	432	1530	787	0	0	25	1219	1410

* = Adjust framing dimensions for interior sheathing (such as sheetrock).
**= If header depth exceeds 3-1/2 inches, notching may be required to maintain clearances to pipe.
***= If appliance is installed off of floor, maintain required clearances to combustibles.
Construct platform in accordance with local building codes.
****= For installations with vinyl flooring, see Section 3.E.

Figure 3.9 Clearances to Combustibles-ECHEL36STIN-C, ECHEL48STIN-C

Framing Dimensions - Passive Heat Front Discharge Single-Sided or See-Through

Front Discharge: Air conveyed into the room through one front discharge slot.

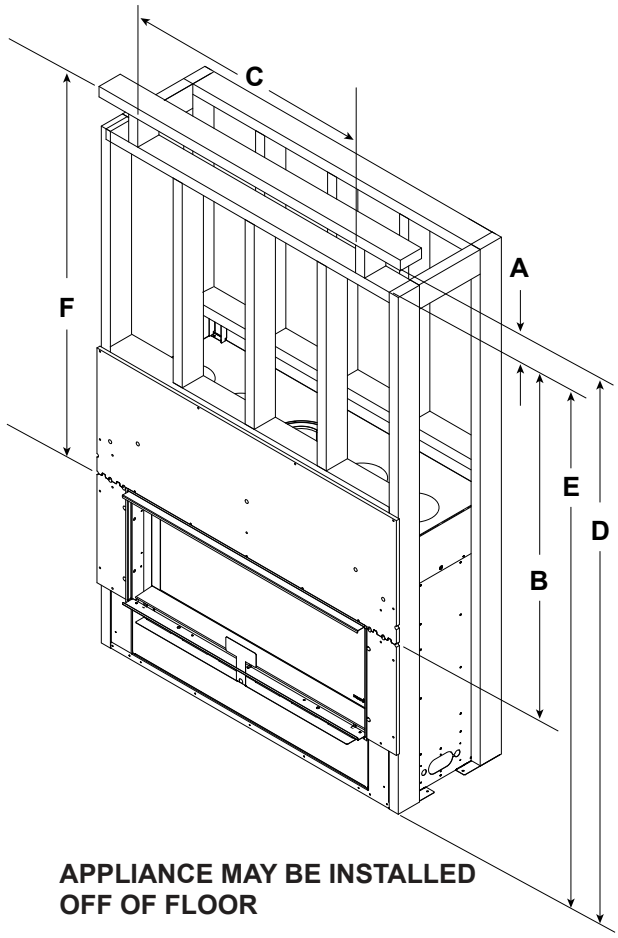

CHASE DETAIL

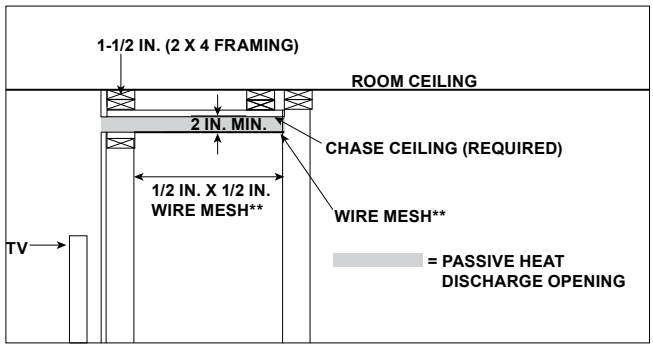

WARNING! Risk of Fire! *Wire mesh required on bottom of discharge opening when discharge opening is greater than 3 inches. Secure mesh to top of framing.*

FRONT DISCHARGE MINIMUM FRAMING DIMENSIONS								
		A		B	C	D	E	F
		TRIM KIT* (PH-TRIM)	NO TRIM KIT**					
		Height of Discharge Opening	Minimum Height of Discharge Opening	Minimum Clearance to Framing	Width of Discharge Opening	Clearance to Top of Discharge Opening from Bottom of Appliance	Clearance from Bottom of Appliance to Bottom of Discharge Opening	Minimum Clearance Appliance Opening to Ceiling
ECHEL36IN-C ECHEL36STIN-C	Inches	3-1/2	2	48	36-1/2	74-1/2	72-1/2	51-1/2
	millimeters	89	51	1219	927	1892	1842	1308
ECHEL48IN-C ECHEL48STIN-C	Inches	3-1/2	2	48	48-1/2	74-1/2	72-1/2	51-1/2
	millimeters	89	51	1219	1232	1892	1842	1308
ECHEL60IN-C	Inches	3-1/2	2	48	60-1/2	74-1/2	72-1/2	51-1/2
	millimeters	89	51	1219	1537	1892	1842	1308
ECHEL72IN-C	Inches	3-1/2	2	67-1/2	72-1/2	94	92	51-1/2
	millimeters	89	51	1715	1842	2388	2337	1308

*** Measurement for Trim Kit = 3-1/2 in. + additional finishing material thickness. Figure 3.11 shows vent cover dimensions.**
**** Measurement for without trim kit = 2 in. + additional finishing material thickness. If discharge opening is greater than 3 inches, wire mesh is required.**

Figure 3.10 Passive Heat Front Discharge Framing Dimensions with Clean Face Finish or Trim Kit

Passive Heat Front Discharge Trim Kit

Vent Cover Dimensions

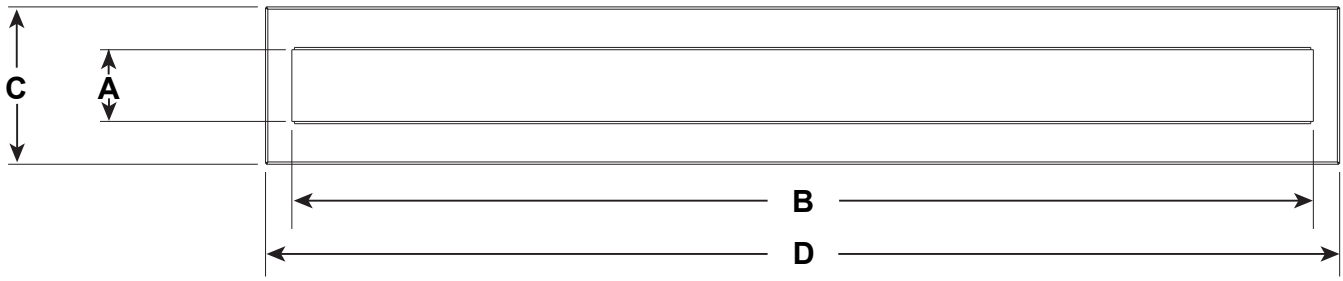

PASSIVE HEAT TRIM KIT DIMENSIONS					
		A	B	C	D
		Inside Height	Inside Width	Outside Height	Outside Width
PH-FRTTRIM-36	Inches	2-9/16	36-1/2	5-5/8	38-3/8
	millimeters	65	927	143	975
PH-FRTTRIM-48	Inches	2-9/16	48-1/2	5-5/8	50-3/8
	millimeters	65	1232	143	1280
PH-FRTTRIM-60	Inches	2-9/16	60-1/2	5-5/8	62-3/8
	millimeters	65	1537	143	1585
PH-FRTTRIM-72	Inches	2-9/16	72-1/2	5-5/8	74-3/8
	millimeters	65	1842	143	1889

➔ **Figure 3.11 Passive Heat Front Discharge - Vent Cover Dimensions**

Framing Dimensions - Passive Heat Side Discharge Single-Sided or See-Through

Side Discharge: Air conveyed into the room through two discharge registers, one on each side of appliance.

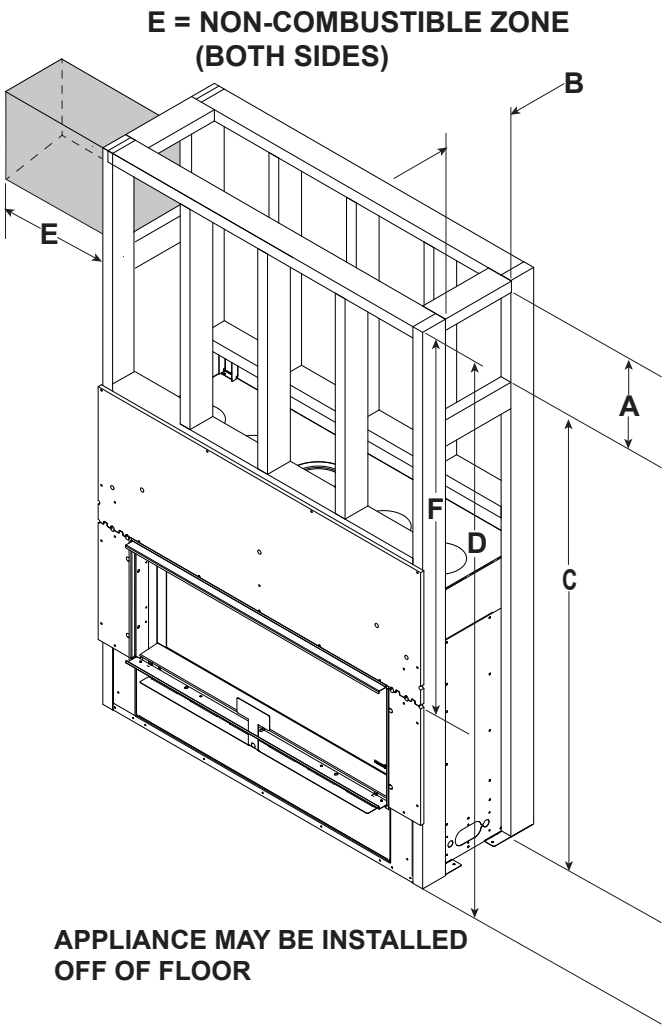

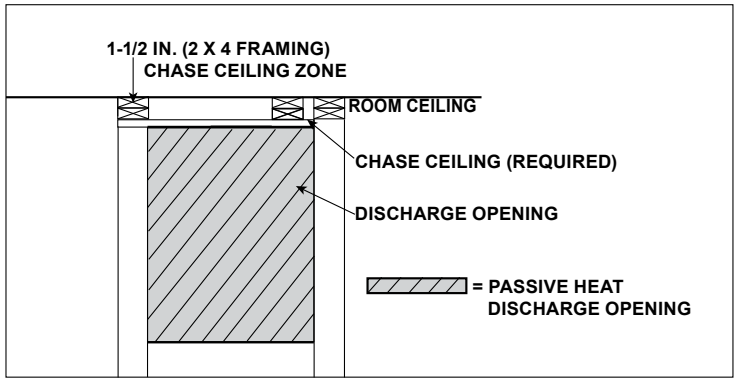

WARNING! Risk of Fire! *DO NOT place combustible objects or combustible materials in non-combustible zone. Appliance and combustible materials will overheat.*

SIDE DISCHARGE FRAMING DIMENSIONS							
		A	B	C	D	E	F
		Height of Discharge Opening	Width of discharge Opening	Minimum Clearance Bottom of Appliance to Bottom of Discharge Opening	Minimum Clearance Bottom of Appliance to Ceiling	Minimum Clearance to Combustible Materials	Minimum Clearance Appliance Opening to Ceiling
ECHEL36IN-C ECHEL36STIN-C	Inches	12-1/4	8-3/4	62-3/4	76-1/2	18	52
	millimeters	311	222	1594	1943	457	1321
ECHEL48IN-C ECHEL48STIN-C	Inches	12-1/4	8-3/4	62-3/4	76-1/2	18	52
	millimeters	311	222	1594	1943	457	1321
ECHEL60IN-C	Inches	12-1/4	8-3/4	62-3/4	76-1/2	18	52
	millimeters	311	222	1594	1943	457	1321
ECHEL72IN-C	Inches	12-1/4	8-3/4	81-1/4	95	18	70-1/2
	millimeters	311	222	2064	2413	457	1791

Figure 3.12 Passive Heat Side Discharge Framing Dimensions

Framing Dimensions - Passive Heat Open Top Discharge Single-Sided or See-Through

Open Top Discharge: A minimum of 3 sides must be open allowing air to be conveyed into the room.

WARNING! Risk of Fire! *Wire mesh required on bottom of discharge opening when discharge opening is greater than 3 inches. Secure mesh to top of framing.*

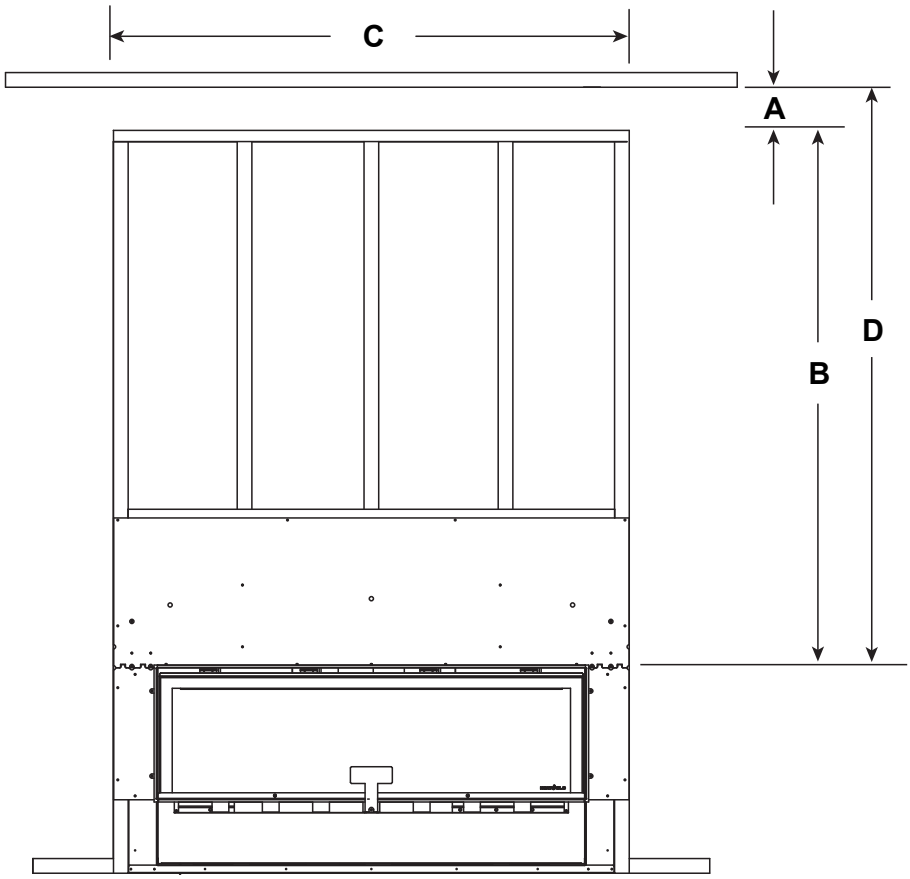

OPEN TOP DISCHARGE MINIMUM FRAMING DIMENSIONS					
		A*	B	C	D
		Minimum Height of Discharge Opening	Clearance to Framing	Width of Discharge Opening	Minimum Clearance Appliance Opening to Ceiling
ECHEL36IN-C/ECHEL36STIN-C	Inches	2	48	51-1/4	50
	millimeters	51	1219	1302	1270
ECHEL48IN-C/ECHEL48STIN-C	Inches	2	48	63-1/4	50
	millimeters	51	1219	1607	1270
ECHEL60IN-C	Inches	2	48	75-1/4	50
	millimeters	51	1219	1911	1270
ECHEL72IN-C	Inches	2	67-1/2	87-1/4	69-1/2
	millimeters	51	1715	2216	1765

* Wire mesh required for front discharge or open top discharge passive heat installations with discharge opening of 3 inches or greater.

Figure 3.13 Passive Heat Minimum Framing Dimensions Open Top Discharge

Framing Dimensions - Ducted Passive Heat Front Discharge (PHFR-MCE) Single-Sided or See-Through

Clearances to Combustibles

Ducted Passive Heat Front Discharge
Ducted Passive Heat Kit (PHFR-MCE)
Single-Sided or See-Through

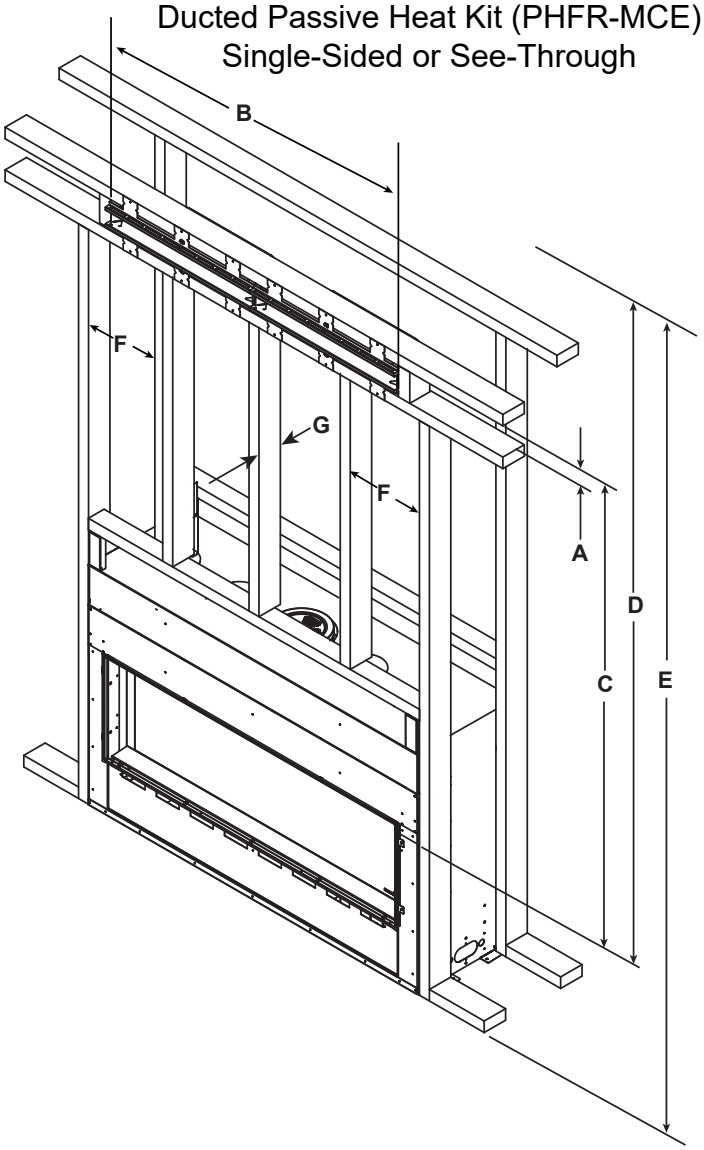

MINIMUM FRAMING DIMENSIONS									
FRONT DISCHARGE									
MODEL	Ducted Passive Heat Kit		A	B	C	D	E	F	G
			Height of Discharge Opening	Width of Discharge Opening	Clearance Opening to Framing	Clearance Opening to Ceiling	Clearance Bottom of Appliance to Ceiling	Framing	2 X 4 Studs
ECHEL36IN-C ECHEL36STIN-C	PHFR-MCE-36	in.	6	38-3/4	50-1/2	53-1/2	78	16 inches (406 mm) on center	3-1/2
		mm	152	984	1283	1359	1981		89
ECHEL48IN-C ECHEL48STIN-C	PHFR-MCE-48	in.	6	50-7/8	50-1/2	53-1/2	78		3-1/2
		mm	152	1292	1283	1359	1981		89
ECHEL60IN-C	PHFR-MCE-60	in.	6	62-3/4	50-1/2	53-1/2	78		3-1/2
		mm	152	1594	1283	1359	1981		89
ECHEL72IN-C	PHFR-MCE-72	in.	6	74-3/4	50-1/2	72	96-1/2		3-1/2
		mm	152	1899	1283	1829	2451		89

Figure 3.14 Clearances to Combustibles - Ducted Passive Heat Front Discharge

Framing Dimensions - Ducted Passive Heat Side Discharge (PHSI-MCE) Single-Sided or See-Through

Clearances to Combustibles

Ducted Passive Heat Side Discharge (PHSI-MCE)
Single-Sided or See-Through

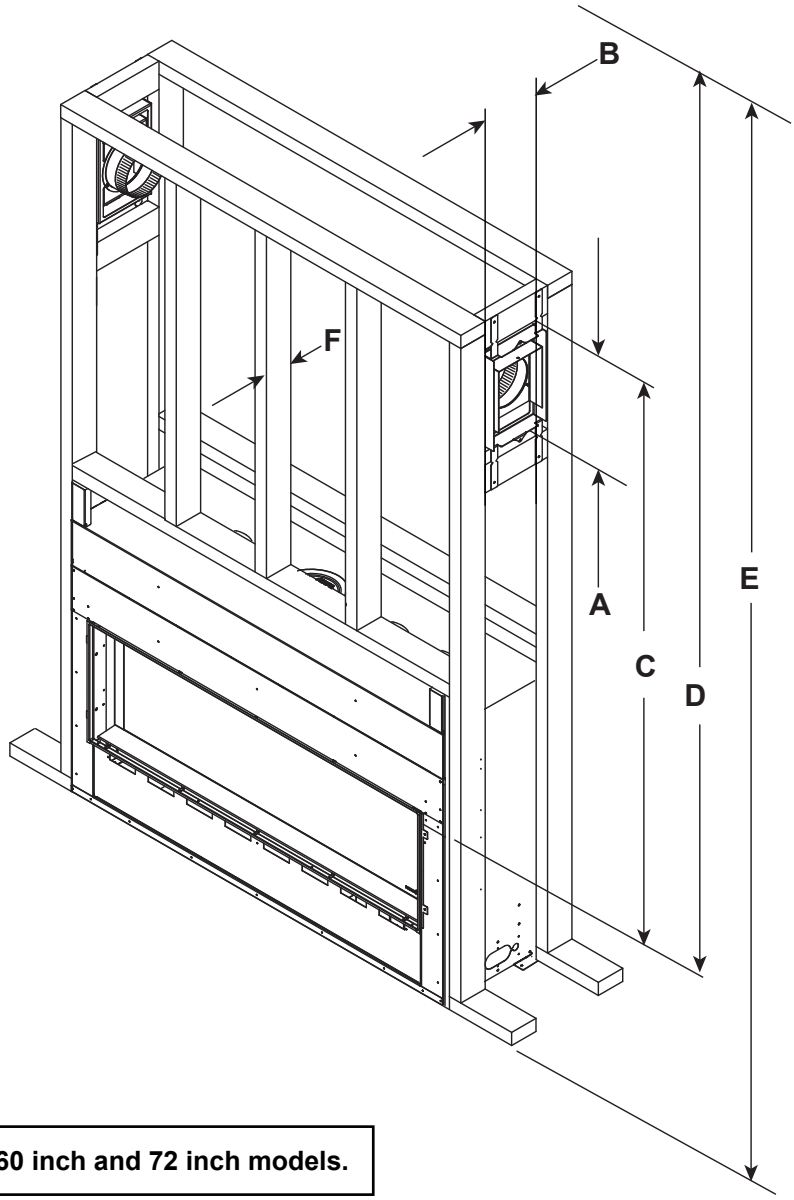

Note: Not for use with 60 inch and 72 inch models.

MINIMUM FRAMING DIMENSIONS								
			SIDE DISCHARGE					
			A	B	C	D	E	F
MODEL	**Ducted Passive Heat Kit**		Height of Discharge Opening	Width of Discharge Opening	Clearance Opening to Framing	Clearance Opening to Ceiling	Clearance Bottom of Appliance to Ceiling	2 X 4 Studs
ECHEL36IN-C ECHEL36STIN-C	PHSI-MCE	in.	16	10-3/16	50	52	76-1/2	3-1/2
		mm	406	259	1270	1321	1943	89
ECHEL48IN-C ECHEL48STIN-C		in.	16	10-3/16	50	52	76-1/2	3-1/2
		mm	406	259	1270	1321	1943	89

Figure 3.15 Clearances to Combustibles - Ducted Passive Heat Side Discharge

C. Constructing the Appliance Chase

NOTICE: *Install appliance on hard metal or wood surfaces extending full width and depth.* ***DO NOT*** *install directly on carpeting, vinyl, or any combustible material other than wood.*

WARNING! Risk of Fire! *Maintain specified air space clearances to appliance and vent pipe:*

- *Insulation and other materials must be secured to prevent accidental contact.*
- *The chase must be properly blocked to prevent blown insulation or other combustibles from entering and making contact with fireplace or chimney.*
- *Failure to maintain airspace may cause overheating and a fire.*

A chase is a vertical box-like structure built to enclose the gas appliance and/or its vent system. In cooler climates the vent should be enclosed inside the chase.

NOTICE: *Treatment of ceiling firestops and wall shield firestops and construction of the chase may vary with the type of building. These instructions are not substitutes for the requirements of local building codes. Therefore, you MUST check local building codes to determine the requirements to these steps.*

NOTICE: Where required by code, install only sprinkler heads with a sprinkler activation temperature classified as Extra High.

- *Sprinklers inside of chase: Keep sprinkler head away from vent and chimney.*
- *Heat Management applications: Maintain 36 inches of clearance to openings from which heat is discharged such as convection slots, passive heat registers, heat zone registers, etc. Refer to Section 6.B for Heat Management options allowed for this appliance.*

Chases should be constructed and insulated in the same manner as the thermal envelope of the home based on the code requirements for that climate zone to prevent air leakage and draft problems. The chase is an extension of the building thermal envelope.

To further prevent drafts and air leakage, the wall shield and ceiling firestops should be sealed with caulk or foil tape with a minimum of 300 ºF continuous exposure rating to seal gaps. Gas line holes and other openings should be sealed with caulk with a minimum of 300 ºF continuous exposure rating or stuffed with unfaced insulation. If the appliance is being installed on a cement surface, a layer of plywood may be placed underneath to prevent conducting cold up into the room.

Minimum height requirements for an exterior chase on a top-vented appliance are shown in Figure 3.16. Reference Figure 4.5 for additional clearances.

Note: Figure 3.8 and Figure 3.9 show the fireplace installed on the floor. However, this fireplace can be elevated off the floor provided that the fireplace is properly supported by framing materials and the ceiling clearances are maintained.

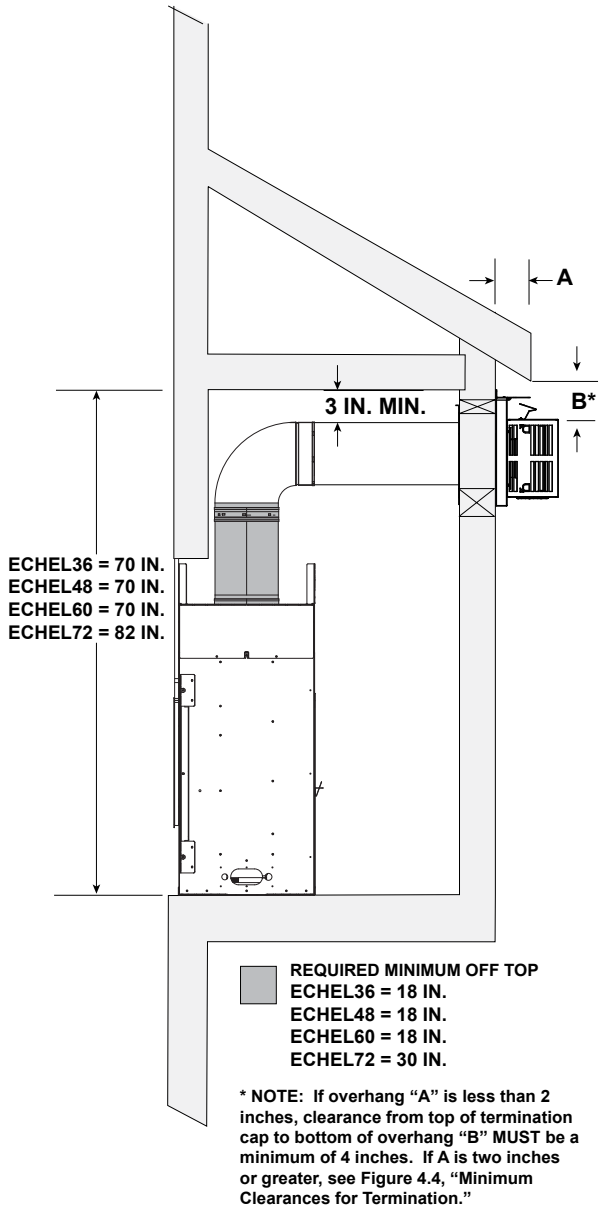

Figure 3.16 Exterior Chase - Minimum Height Requirements

D. Floor Protection

NOTICE: *Install appliance on hard metal or wood surfaces extending full width and depth.* ***DO NOT*** *install directly on carpeting, vinyl, tile or any combustible material other than wood.*

WARNING! Risk of Fire! *Maintain specified air space clearances to appliance and vent pipe:*

- Insulation and other materials must be secured to prevent accidental contact.
- The chase must be properly blocked to prevent blown insulation or other combustibles from entering and making contact with fireplace or chimney.
- Failure to maintain airspace could cause overheating and fire.

Elevated Hearth Systems

Some hearth systems will elevate the appliance off the floor at a given dimension. The elevation will also have to be added to the following: Wall penetration referenced in Figure 5.2 (Wall penetration) and Rough Opening Height (header height) referenced in Figure 3.8 and 3.9.

Note: Finished floor thickness should also be considered when determining installation dimensions.

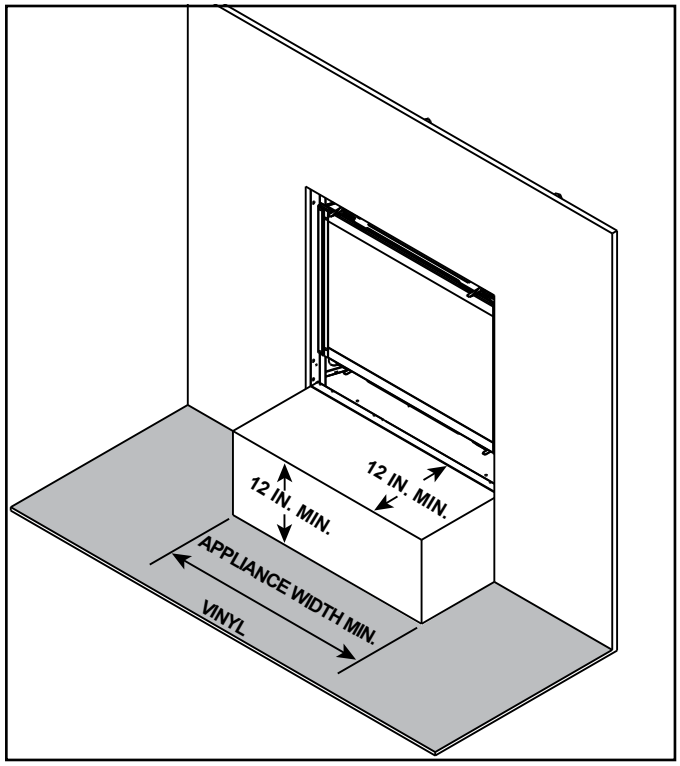

Figure 3.17 Vinyl Flooring Recommendations

E. Vinyl Flooring

Vinyl flooring is sensitive to heat. To avoid damage to the vinyl flooring, a 12 inch minimum x 12 inch minimum hearth is recommended when using vinyl flooring up to the wall. See Figure 3.17. If no hearth is used, it is recommended to provide a minimum of 30 inches of clearance in front of the appliance to the vinyl flooring OR the bottom of the appliance should be raised a minimum of 15 inches off of the floor to allow the vinyl flooring to be installed up to the wall.

NOTICE: *Clearances that do not meet the minimum guidelines could result in damage or buckling to the vinyl flooring and is done at the installer's risk.*

Hearth and Home Technologies does not recommend adhesive based vinyl flooring products due to thermal expansion during operation. Floating style flooring can be used, but will reach temperatures up to 110 °F (based on ambient temperature of 70 °F). Consult the manufacturer's flooring specifications to ensure compatibility.

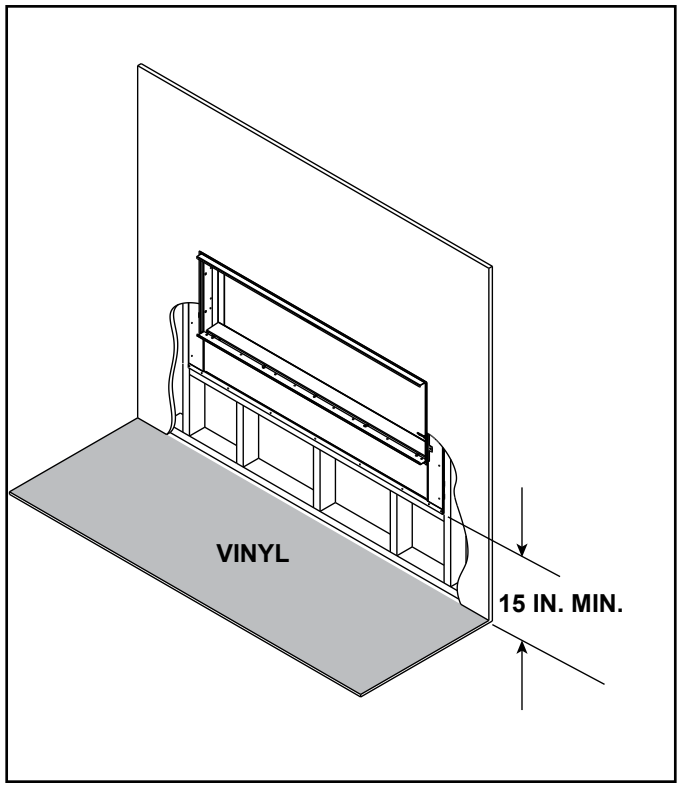

Figure 3.18 Vinyl Flooring Recommendations

4 Termination Location and Vent Information

A. Approved Pipe

WARNING! Risk of Fire, Delayed Ignition or Asphyxiation. *This appliance requires a separate vent.* ***DO NOT*** *vent to a pipe serving any other appliance.*

This appliance is only approved for use with Hearth & Home Technologies DVP venting systems. Refer to Section 12.A for vent component information and dimensions.

Only use listed decorative termination caps/shrouds with Hearth & Home Technologies approved venting systems.

DO NOT mix pipe, fittings or joining methods from different manufacturers.

The pipe is tested to be run inside an enclosed wall. There is no requirement for inspection openings at each joint within the wall.

B. Vent Termination Minimum Clearances

⚠ WARNING

Fire Risk.

Maintain vent clearance to combustibles as specified.

- **DO NOT** pack air space with insulation or other materials.

Failure to keep insulation or other materials away from vent pipe could cause overheating and fire.

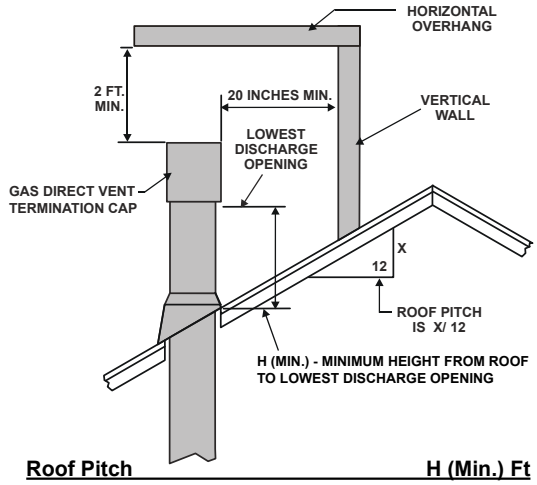

Roof Pitch	H (Min.) Ft
Flat to 6/12	1.0*
Over 6/12 to 7/12	1.25*
Over 7/12 to 8/12	1.5*
Over 8/12 to 9/12	2.0*
Over 9/12 to 10/12	2.5*
Over 10/12 to 11/12	3.25
Over 11/12 to 12/12	4.0
Over 12/12 to 14/12	5.0
Over 14/12 to 16/12	6.0
Over 16/12 to 18/12	7.0
Over 18/12 to 20/12	7.5
Over 20/12 to 21/12	8.0

* H minimum may vary depending on regional snowfall. Refer to local codes.

Figure 4.1 Minimum Height From Roof to Lowest Discharge Opening

A	B
6 in. (minimum) up to 20 in. *152 mm/508 mm*	18 in. minimum *457 mm*
20 in. and over	0 in. minimum

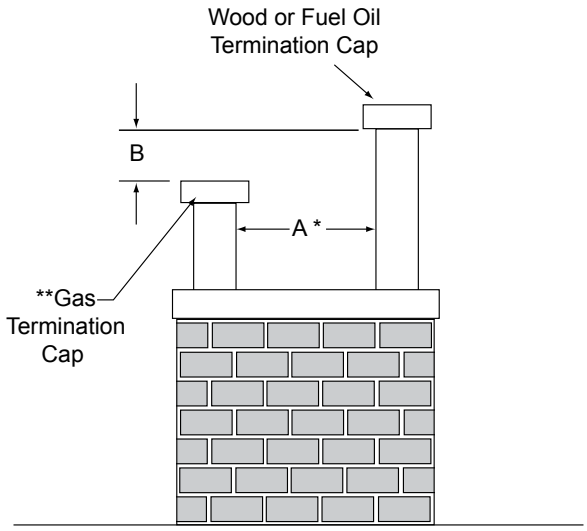

* If using decorative cap cover(s), this distance may need to be increased. Refer to the installation instructions supplied with the decorative cap cover.

** If two gas terminations are present, they may be level (B = 0 inches) provided A is a minimum of 6 inches.

Figure 4.2 Staggered Termination Caps

CAUTION! Risk of Burns! *Termination caps are HOT, consider proximity to doors, traffic areas or where people may pass or gather (sidewalk, deck, patio, etc.). Listed cap shields available. Contact your dealer.*

- Local codes or regulations may require different clearances.
- Hearth & Home Technologies assumes no responsibility for the improper performance of the appliance when the venting system does not meet these requirements.
- Vinyl protection kits are suggested for use with vinyl siding.
- Measure horizontal and vertical termination cap clearances as noted in Figure 4.3.

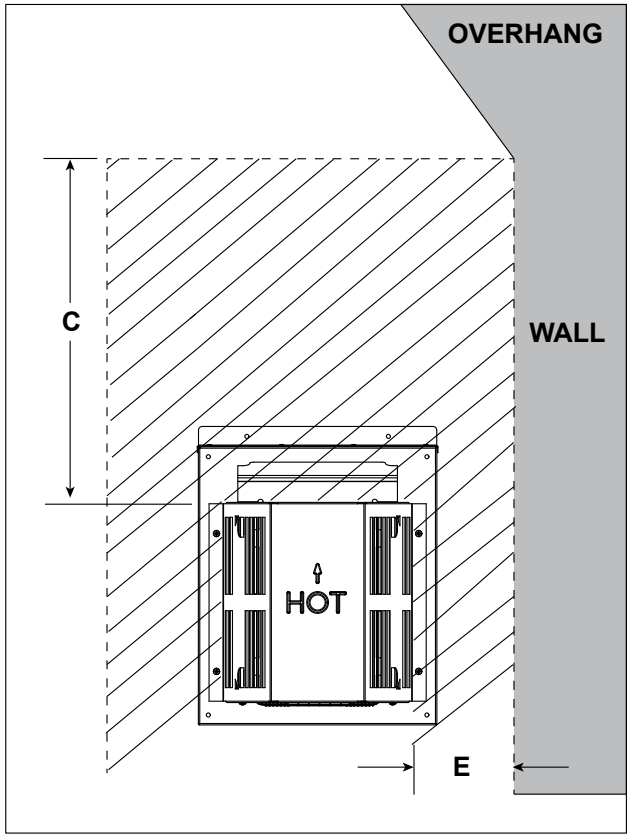

C and E dimensions are defined in Figure 4.5.

Figure 4.4 Measure Horizontal and Vertical Termination Clearance to Trapezoid Portion of Cap

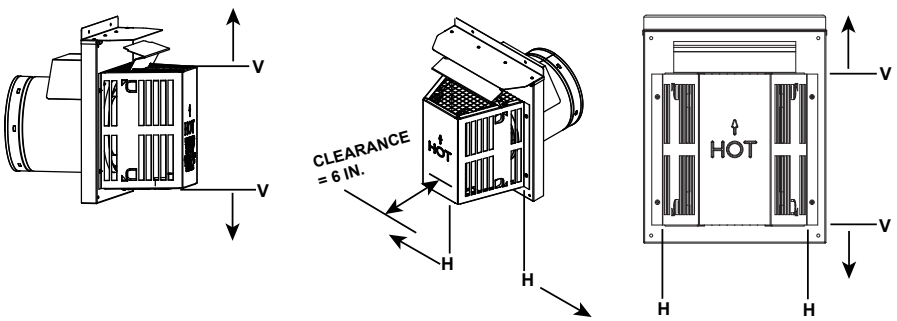

Figure 4.3

C. Vent Terminal Clearances

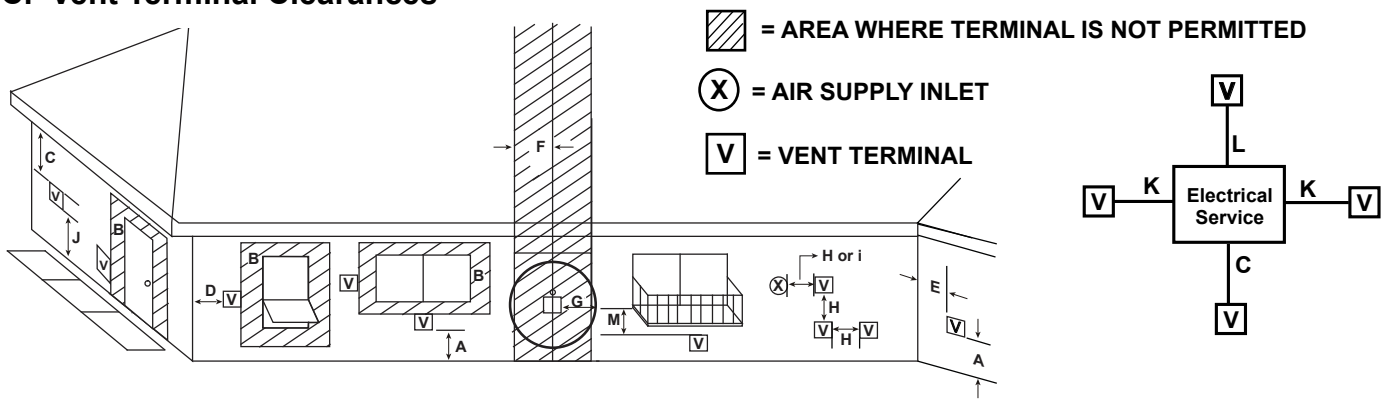

U.S.A. Installations: In accordance with the current ANSI Z223.1/NFPA 54, National Fuel Gas Code.
Canadian Installations: In accordance with the current CSA B149.1, Natural Gas and Propane Installation Code.

		U.S.A.	CANADA
A	Clearance above grade,veranda, porch, deck, or balcony	12 in. (305 mm)	12 in. (305 mm)
B	Clearance to window or door that may be opened, or to permanently closed window U.S.A.: = 12 in. min. (305 mm min.) CANADA: = 12 in. min. (305 mm min.)		
C	Clearance below unventilated soffit	18 in. (457 mm)	18 in. (457 mm)
	Clearance below ventilated soffit	18 in. (457 mm)	18 in. (457 mm)
	Clearance below any vinyl soffits and electrical service	30 in. (762 mm)	30 in. (762 mm)
D	Clearance to outside corner	6 in. (152 mm)	6 in. (152 mm)
E	Clearance to inside corner	6 in. (152 mm)	6 in. (152 mm)
F	Not to be installed above a gas meter/regulator assembly within 3 feet horizontally from the center-line of the regulator	3 ft (914 mm)	3 ft (914 mm)
G	Clearance to gas service regulator vent outlet	3 ft (914 mm)	3 ft (914 mm)
H	Clearance to non-mechanical air supply inlet to building or the combustion air inlet to any other appliance termination (mechanical or non-mechanical)	9 in. (229 mm min.)	12 in. (305 mm min.)
I	Clearance to a mechanical (powered) air supply inlet ***(All mechanical air intakes within 10 feet of a horizontal termination cap must be a minimum of 3 feet below termination.)	3 ft (914 mm)***	6 ft (1.8 m)
J	On **public** property: clearance above paved sidewalk or a paved driveway.	7 ft (2.1 m)	7 ft (2.1 m)**
	**(A vent shall not terminate directly above a sidewalk or paved driveway which is located between two single family dwellings and serves both dwellings.)		
K	Clearance from sides of electrical service	6 in. (152 mm)	6 in. (152 mm)
	Location of the vent termination must not interfere with access to the electrical service.		
L	Clearance above electrical service	12 in. (305 mm)	12 in. (305 mm)
	Location of the vent termination must not interfere with access to the electrical service.		
M	Clearance under veranda, porch, deck, balcony or overhang *(Permitted only if veranda, porch, deck, or balcony is fully open on a minimum of two sides beneath the floor.)	18 in. (457 mm)	18 in. (457 mm)*
	Vinyl or composite overhang	42 in. (1067 mm)	42 in. (1067 mm)

Figure 4.5 Minimum Clearances for Termination

D. Use of Elbows

Diagonal runs have both vertical and horizontal vent aspects when calculating the effects. Use the rise for the vertical aspect and the run for the horizontal aspect. See Figure 4.6.

Two 45º elbows may be used in place of one 90º elbow. On 45º runs, one foot of diagonal is equal to 8-1/2 inch (216 mm) horizontal run and 8-1/2 inch (216 mm) vertical run. A length of straight pipe is allowed between two 45º elbows. See Figure 4.6.

Figure 4.7 shows the vertical and horizontal offsets for DVP elbows.

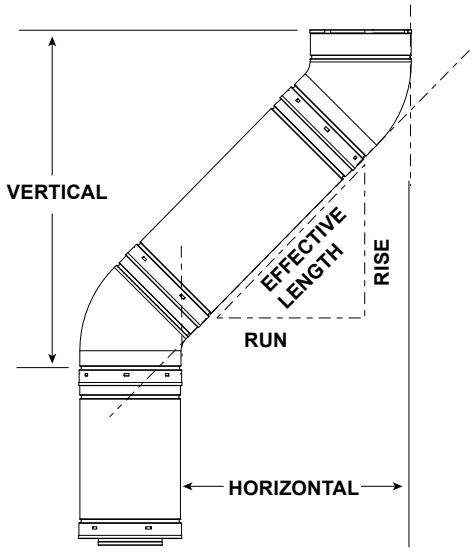

DVP Pipe	Effective Length		Rise/Run	
	Inches	Millimeters	Inches	Millimeters
DVP4	4	102	2-3/4	70
DVP6	6	152	4-1/4	108
DVP12	12	305	8-1/2	216
DVP24	24	610	17	432
DVP36	36	914	25-1/2	648
DVP48	48	1219	34	864
DVP6A	3 to 6	76 to 152	2-1/8-4-1/4	54-108
DVP12A	3 to 12	76 to 305	2-1/8-8-1/2	54-216

Figure 4.6

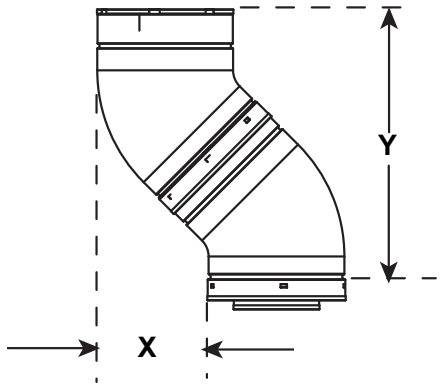

Vent Type	X		Y	
	Inches	Millimeters	Inches	Millimeters
DVP	6-5/8	168	16-1/2	419

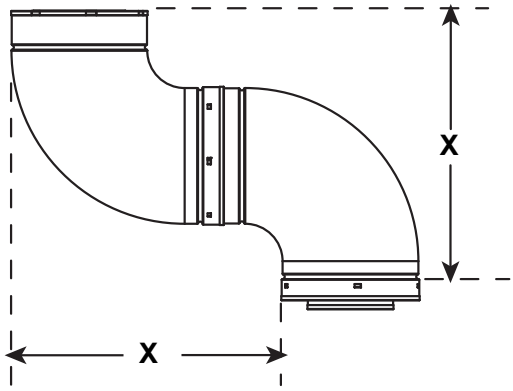

Vent Type	X	
	Inches	Millimeters
DVP	16-1/4	413

Figure 4.7 Vertical and Horizontal Offset for DVP Elbows

E. Vent Diagrams

General Rules:

- SUBTRACT 3 ft from the total H measurement for each 90º elbow installed horizontally.
- SUBTRACT 1-1/2 ft from the total H measurement for each 45º elbow installed horizontally.
- A maximum of three 90º elbows (or six 45º elbows) may be used in any vent configuration. Some elbows may be installed horizontally. See Figure 4.12 and Figure 4.19.
- Elbows may be placed back to back anywhere in the system.
- Any 90º elbow may be replaced with two back to back 45º elbows.
- When penetrating a combustible wall, a wall shield firestop must be installed.
- When penetrating a combustible ceiling, a ceiling firestop must be installed.
- Horizontal runs of vent do not require vertical rise; horizontal runs may be level.
- Horizontal termination cap should have a 1/4 inch downward slant to allow any moisture in cap to be released. See Figure 4.8.

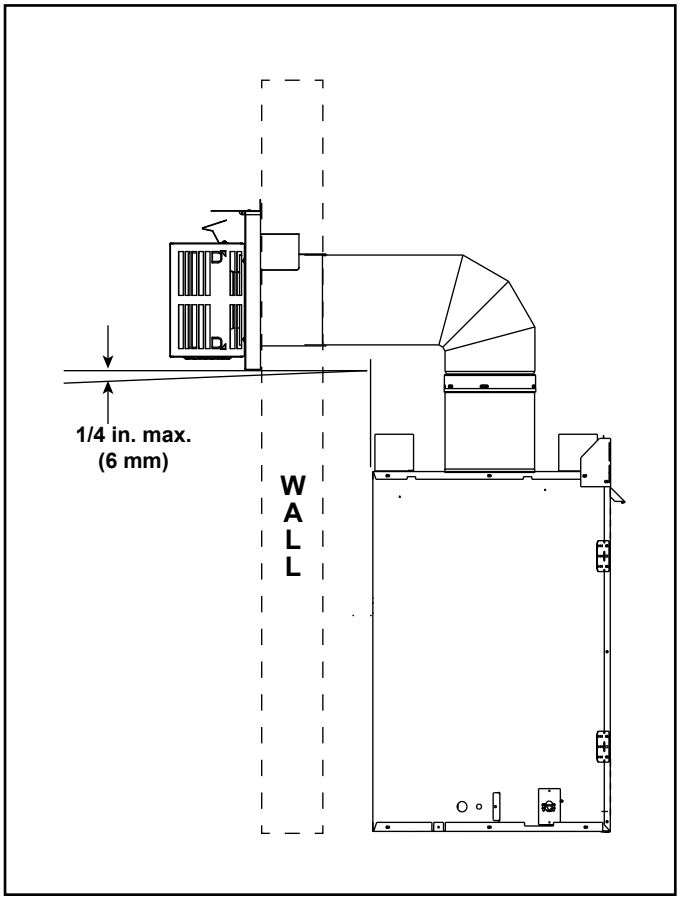

Figure 4.8

Measuring Standards:

Vertical and horizontal measurements listed in the vent diagrams and clearances for termination were made using the following standards:

- Pipe measurements are shown using the effective length of pipe. See Section 12.A (Figure 12.1), for information on effective length of pipe components.
- Horizontal terminations are measured to the outside mounting surface (flange of termination cap). See Figure 4.9.
- Vertical terminations are measured to top of last section of pipe. See Figure 4.10.
- Horizontal pipe installed level with no rise.

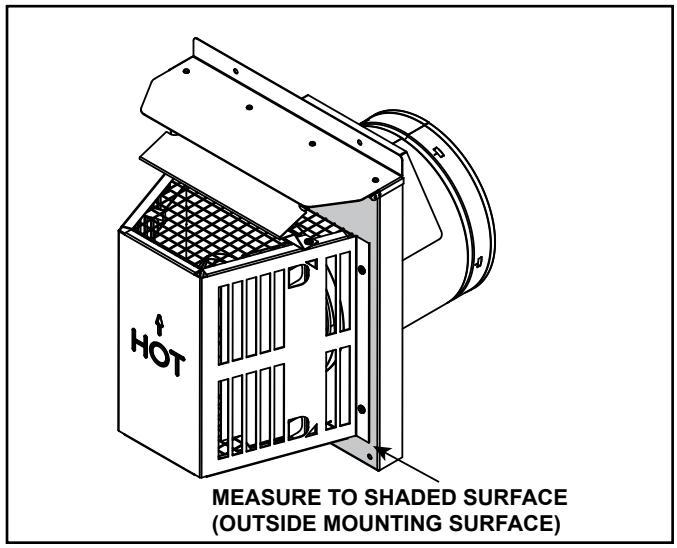

Figure 4.9 Measure to Outside Mounting Surface

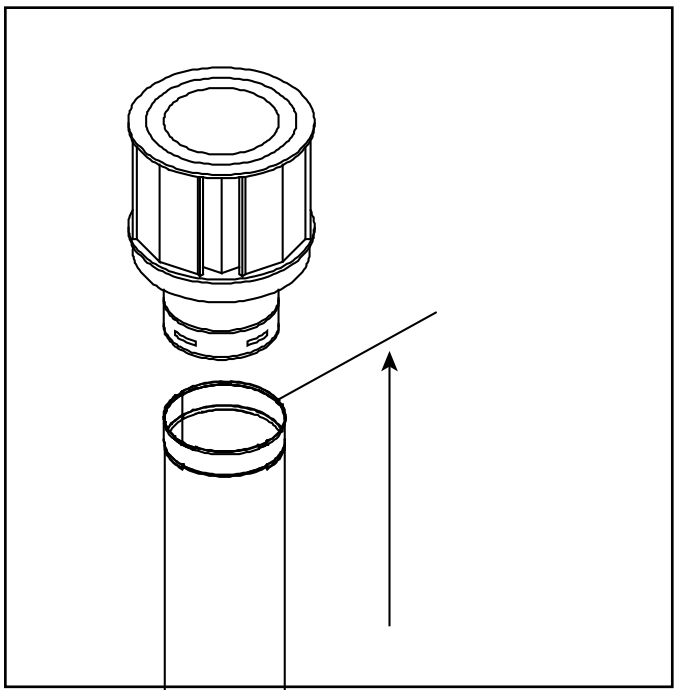

Figure 4.10 Measure to Top of Last Section of Pipe

⚠ WARNING

Fire Risk. Explosion Risk.

Do NOT pack insulation or other combustibles between ceiling firestops.

- ALWAYS maintain specified clearances around venting and firestop systems.
- Install wall shield and ceiling firestops as specified.

Failure to keep insulation or other material away from vent pipe could cause fire.

Top Vent - Horizontal Termination Venting with 1 elbow

WARNING! Risk of Fire!

DO NOT attach elbow directly to the appliance.

- *The ECHEL36IN-C/ECHEL36STIN-C, ECHEL48IN-C/ECHEL48STIN-C and ECHEL60IN-C require a minimum of 18 inches of vertical venting before attaching any elbow to the appliance.*
- *The ECHEL72IN-C requires a minimum of 30 inches of vertical venting before attaching any elbow to the appliance.*

ECHEL36IN-C, ECHEL48IN-C, ECHEL60IN-C			
V_1 Minimum		H_1 Maximum	
1-1/2 ft.	457 mm	1-1/2 ft.	457 mm
2-1/2 ft.	762 mm	6 ft.	1.8 m
3-1/2 ft.	1.1 m	9 ft.	2.7 m
5 ft.	1.5 m	12 ft.	3.7 m
6 ft.	1.8 m	15 ft.	4.6 m
7 ft.	2.1 m	18 ft.	5.5 m
8 ft.	2.4 m	21 ft.	6.4 m
9 ft.	2.7 m	24 ft.	7.3 m
$V_1 + H_1$ = 63 ft. (19.2 m) Maximum H^1 = 24 ft. (7.3 m) Maximum			

Note: Use DVP Series components only.

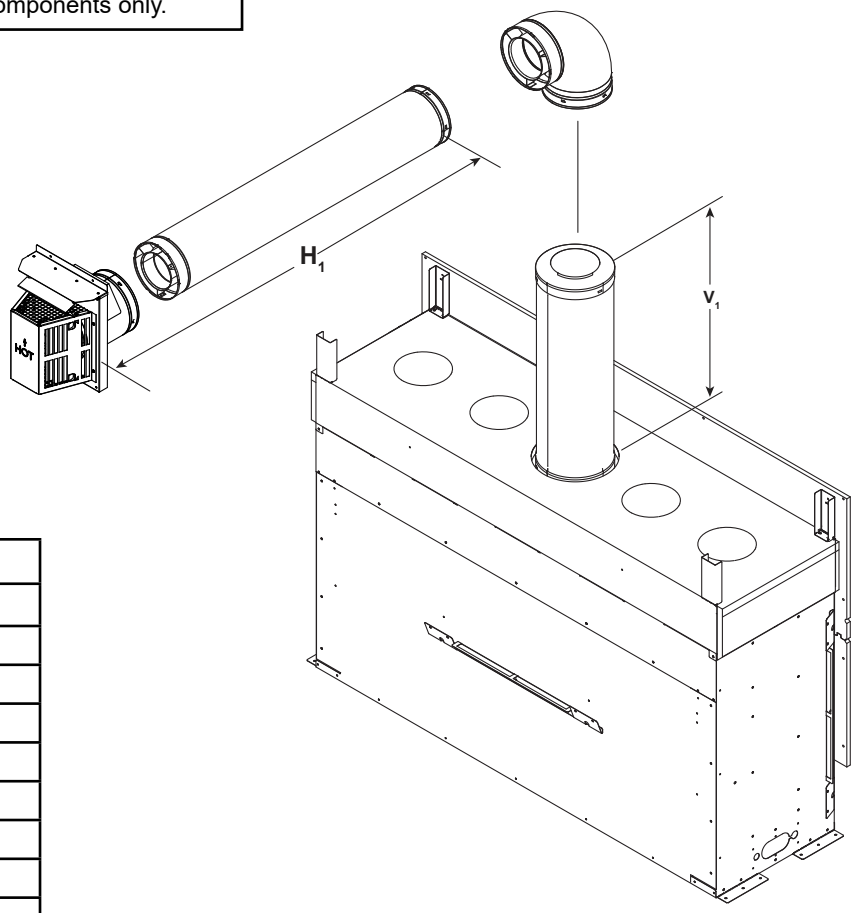

ECHEL36STIN-C, ECHEL48STIN-C			
V_1 Minimum		H_1 Maximum	
1-1/2 ft.	457 mm	3 ft.	914 mm
2-1/2 ft.	762 mm	6 ft.	1.8 m
3-1/2 ft.	1.1 m	9 ft.	2.7 m
5 ft.	1.5 m	12 ft.	3.7 m
6 ft.	1.8 m	15 ft.	4.6 m
7 ft.	2.1 m	18 ft.	5.5 m
8 ft.	2.4 m	21 ft.	6.4 m
9 ft.	2.7 m	24 ft.	7.3 m
$V_1 + H_1$ = 63 ft. (19.2 m) Maximum H^1 = 24 ft. (7.3 m) Maximum			

ECHEL72IN-C			
V_1 Minimum		H_1 Maximum	
2-1/2 ft.	762 mm	1-1/2 ft.	457 mm
3-1/2 ft.	1.1 m	6 ft.	1.8 m
4-1/2 ft.	1.4 m	9 ft.	2.7 m
6 ft.	1.8 m	12 ft.	3.7 m
7 ft.	2.1 m	15 ft.	4.6 m
8 ft.	2.4 m	18 ft.	5.5 m
9 ft.	2.7 m	21 ft.	6.4 m
10 ft.	3.0 m	24 ft.	7.3 m
$V_1 + H_1$ = 63 ft. (19.2 m) Maximum H^1 = 24 ft. (7.3 m) Maximum			

Figure 4.11

Top Vent - Horizontal Termination
Venting with 2 elbows

WARNING! Risk of Fire!

DO NOT attach elbow directly to the appliance.

- *The ECHEL36IN-C/ECHEL36STIN-C, ECHEL48IN-C/ECHEL48STIN-C and ECHEL60IN-C require a minimum of 18 inches of vertical venting before attaching any elbow to the appliance.*
- *The ECHEL72IN-C requires a minimum of 30 inches of vertical venting before attaching any elbow to the appliance.*

ECHEL36IN-C, ECHEL48IN-C, ECHEL60IN-C			
V_1 Minimum		$H_1 + H_2$ Maximum	
1-1/2 ft.	457 mm	1-1/2 ft.	457 mm
2-1/2 ft.	762 mm	6 ft.	1.8 m
3-1/2 ft.	1.1 m	9 ft.	2.7 m
5 ft.	1.5 m	12 ft.	3.7 m
6 ft.	1.8 m	15 ft.	4.6 m
7 ft.	2.1 m	18 ft.	5.5 m
8 ft.	2.4 m	21 ft.	6.4 m
9 ft.	2.7 m	24 ft.	7.3 m
$V_1 + H_1 + H_2$ = 63 ft. (19.2 m) Maximum $H_1 + H_2$ = 24 ft. (7.3 m) Maximum			

Note: Use DVP Series components only.

ECHEL72IN-C			
V_1 Minimum		$H_1 + H_2$ Maximum	
2-1/2 ft.	762 mm	1-1/2 ft.	457 mm
3-1/2 ft.	1.1 m	6 ft.	1.8 m
4-1/2 ft.	1.4 m	9 ft.	2.7 m
6 ft.	1.8 m	12 ft.	3.7 m
7 ft.	2.1 m	15 ft.	4.6 m
8 ft.	2.4 m	18 ft.	5.5 m
9 ft.	2.7 m	21 ft.	6.4 m
10 ft.	3.0 m	24 ft.	7.3 m
$V_1 + H_1 + H_2$ = 63 ft. (19.2 m) Maximum $H_1 + H_2$ = 24 ft. (7.3 m) Maximum			

ECHEL36STIN-C, ECHEL48STIN-C			
V_1 Minimum		$H_1 + H_2$ Maximum	
1-1/2 ft.	457 mm	3 ft.	914 mm
2-1/2 ft.	762 mm	6 ft.	1.8 m
3-1/2 ft.	1.1 m	9 ft.	2.7 m
5 ft.	1.5 m	12 ft.	3.7 m
6 ft.	1.8 m	15 ft.	4.6 m
7 ft.	2.1 m	18 ft.	5.5 m
8 ft.	2.4 m	21 ft.	6.4 m
9 ft.	2.7 m	24 ft.	7.3 m
$V_1 + H_1 + H_2$ = 63 ft. (19.2 m) Maximum $H_1 + H_2$ = 24 ft. (7.3 m) Maximum			

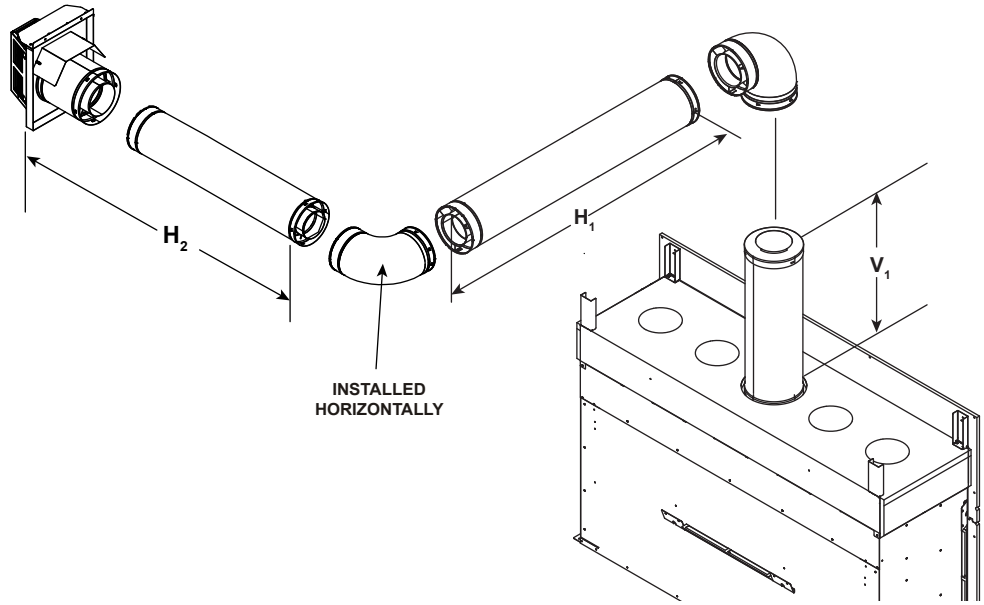

Figure 4.12

Top Vent - Horizontal Termination
Venting with 3 Elbows

WARNING! Risk of Fire!

DO NOT attach elbow directly to the appliance.

- *The ECHEL36IN-C/ECHEL36STIN-C, ECHEL48IN-C/ECHEL48STIN-C and ECHEL60IN-C require a minimum of 18 inches of vertical venting before attaching any elbow to the appliance.*
- *The ECHEL72IN-C requires a minimum of 30 inches of vertical venting before attaching any elbow to the appliance.*

ECHEL36IN-C, ECHEL48IN-C, ECHEL60IN-C			
$V_1 + V_2$ Minimum		$H_1 + H_2$ Maximum	
1-1/2 ft.	457 mm	1-1/2 ft.	457 mm
2-1/2 ft.	762 mm	6 ft.	1.8 m
3-1/2 ft.	1.1 m	9 ft.	2.7 m
5 ft.	1.5 m	12 ft.	3.7 m
6 ft.	1.8 m	15 ft.	4.6 m
7 ft.	2.1 m	18 ft.	5.5 m
8 ft.	2.4 m	21 ft.	6.4 m
9 ft.	2.7 m	24 ft.	7.3 m
$V_1 + V_2 + H_1 + H_2$ = 63 ft. (19.2 m) Maximum $H_1 + H_2$ = 24 ft. (7.3 m) Maximum			

Note: Use DVP Series components only.

ECHEL36STIN-C, ECHEL48STIN-C			
$V_1 + V_2$ Minimum		$H_1 + H_2$ Maximum	
1-1/2 ft.	457 mm	3 ft.	914 mm
2-1/2 ft.	762 mm	6 ft.	1.8 m
3-1/2 ft.	1.1 m	9 ft.	2.7 m
5 ft.	1.5 m	12 ft.	3.7 m
6 ft.	1.8 m	15 ft.	4.6 m
7 ft.	2.1 m	18 ft.	5.5 m
8 ft.	2.4 m	21 ft.	6.4 m
9 ft.	2.7 m	24 ft.	7.3 m
$V_1 + V_2 + H_1 + H_2$ = 63 ft. (19.2 m) Maximum $H_1 + H_2$ = 24 ft. (7.3 m) Maximum			

ECHEL72IN-C			
$V_1 + V_2$ Minimum		$H_1 + H_2$ Maximum	
2-1/2 ft.	762 mm	1-1/2 ft.	457 mm
3-1/2 ft.	1.1 m	6 ft.	1.8 m
4-1/2 ft.	1.4 m	9 ft.	2.7 m
6 ft.	1.8 m	12 ft.	3.7 m
7 ft.	2.1 m	15 ft.	4.6 m
8 ft.	2.4 m	18 ft.	5.5 m
9 ft.	2.7 m	21 ft.	6.4 m
10 ft.	3.0 m	24 ft.	7.3 m
$V_1 + V_2 + H_1 + H_2$ = 63 ft. (19.2 m) Maximum $H_1 + H_2$ = 24 ft. (7.3 m) Maximum			

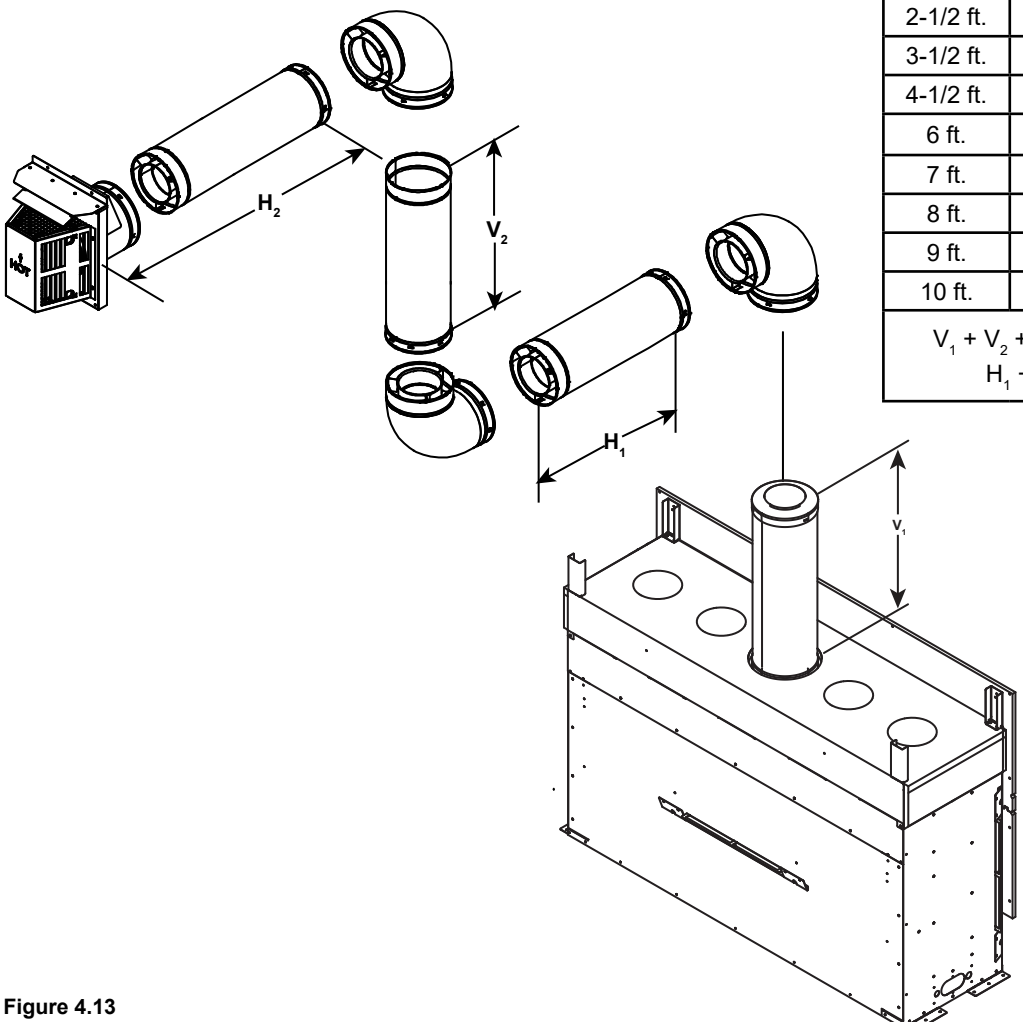

Figure 4.13

Top Vent - Vertical Termination
No Elbows

V = 2-1/2 ft Min. (762 mm), 50 ft. Max. (15.2 m)

Note: If installing a vertical vent/termination off the top of the appliance, the optional exhaust restrictor may be needed.

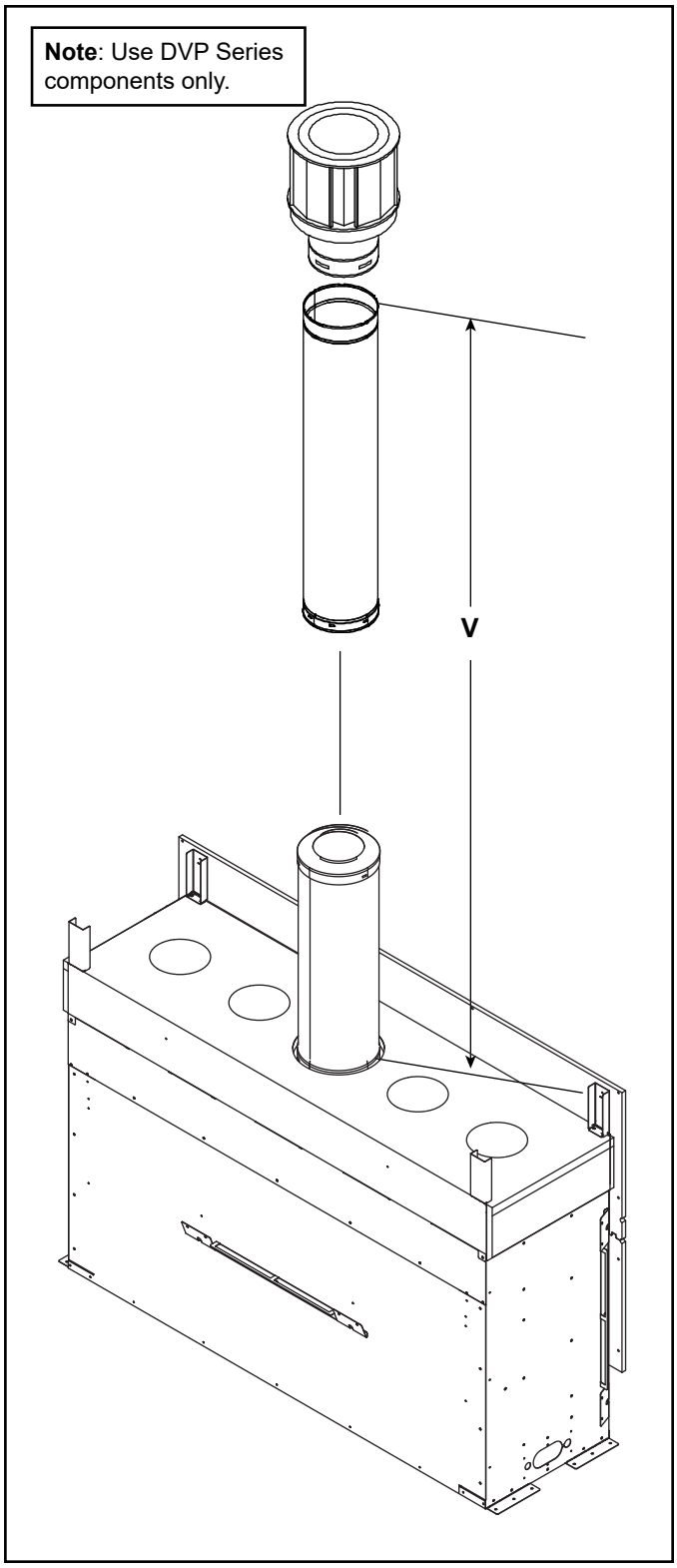

Figure 4.14 Vertical Vent Maximum

Exhaust restrictor Instructions

Exhaust restrictors are recommended for these vertically terminated products which have excessive draft. Exhaust restrictors will compensate for high draft, and restore visual flame height. If the vent configuration has a total vertical of 20-50 feet, the included exhaust restrictor may be needed.

Exhaust restrictor: ECHEL36IN-C, ECHEL48IN-C, ECHEL60IN-C, ECHEL72IN-C

1. Locate the two pilot holes in the inside firebox chamber as shown in Figure 4.15.
2. Break the flue restrictor into two pieces. Do this by bending the part back and forth until it breaks. See Figure 4.16.
3. The setting for ECHEL36IN-C, ECHEL48IN-C, ECHEL60IN-C and ECHEL72IN-C is a 2.5 inch setting, or 2-2. Align the holes marked “2” on the numbered exhaust restrictor piece with the hole on the other exhaust restrictor piece. See Figure 4.17. Align the exhaust restrictor pieces with the pilot holes in the inner firebox chamber. Use two 1/2 inch self-piercing screws to secure vent restrictor to firebox heat shield.
4. In some applications, such as those where the fireplace is elevated off the floor, the exhaust restrictor may be painted, but painting is not required.

NOTICE: *Before painting, contact your dealer for information on the appropriate high temperature paint.*

Exhaust restrictor: ECHEL36STIN-C, ECHEL48STIN-C

1. Break the flue restrictor into two pieces. Do this by bending the part back and forth until it breaks. See Figure 4.16.

Note: The ECHEL36STIN-C and ECHEL48STIN-C do not have pilot holes for the exhaust restrictor in the firebox chamber.

2. The setting for ECHEL36STIN-C and the ECHEL48STIN-C is a 2.5 inch setting, or 2-2. Align the holes marked “2” on the numbered exhaust restrictor piece with the hole on the other exhaust restrictor piece. See Figure 4.17. Center the exhaust restrictor on the vent and secure in place with two 1/2 inch self-piercing screws.
3. In some applications, such as those where the fireplace is elevated off the floor, the exhaust restrictor may be painted, but painting is not required.

NOTICE: *Before painting, contact your dealer for information on the appropriate high temperature paint.*

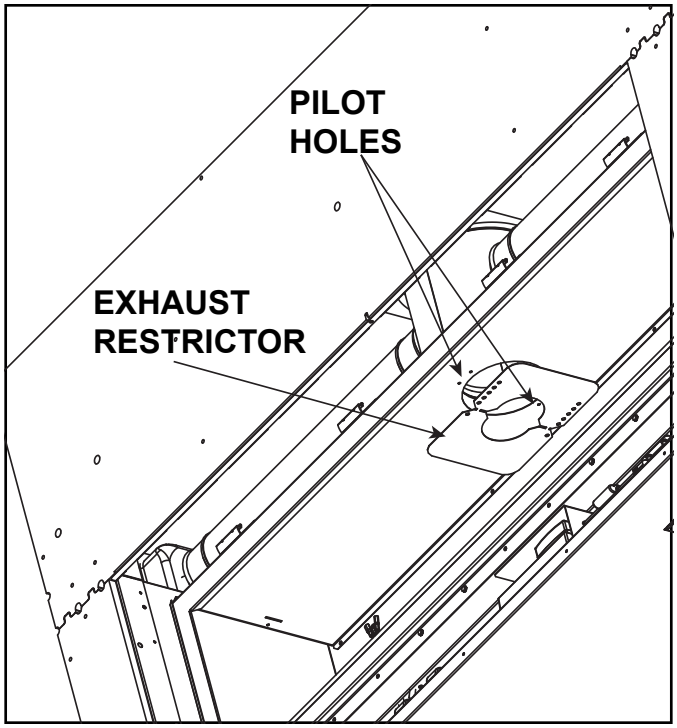

Figure 4.15 Exhaust Restrictor

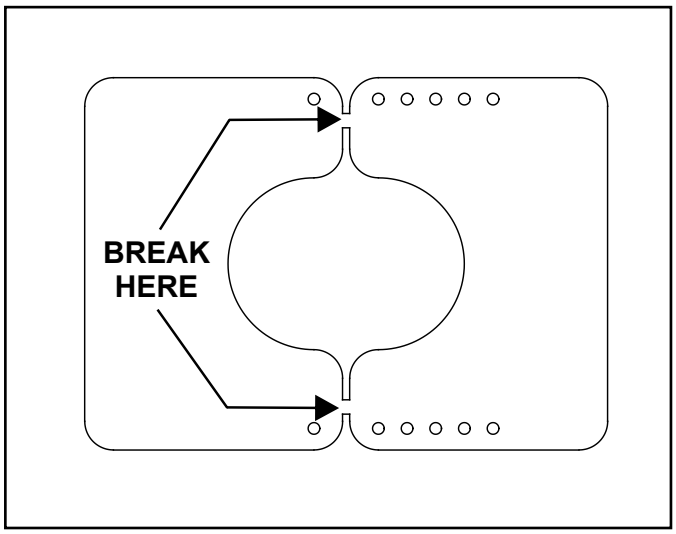

Figure 4.16 Break the Exhaust Restrictor

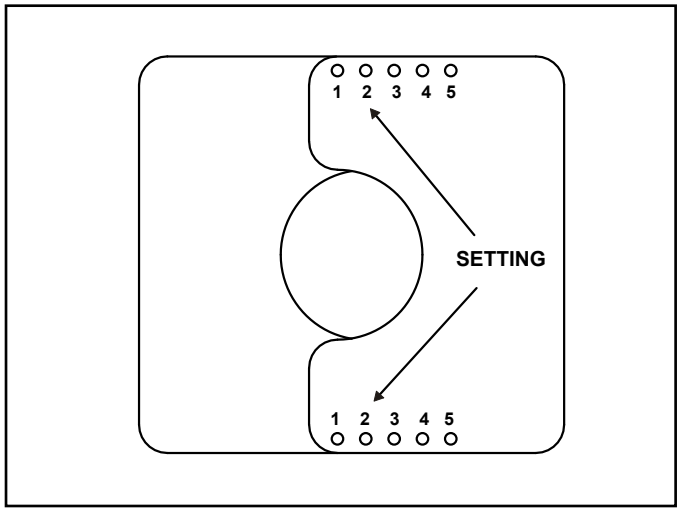

Figure 4.17 Set the Exhaust Restrictor

Top Vent - Vertical Termination
Venting with 2 elbows

WARNING! Risk of Fire!

DO NOT attach elbow directly to the appliance.

- *The ECHEL36IN-C/ECHEL36STIN-C, ECHEL48IN-C/ECHEL48STIN-C and ECHEL60IN-C require a minimum of 18 inches of vertical venting before attaching any elbow to the appliance.*
- *The ECHEL72IN-C requires a minimum of 30 inches of vertical venting before attaching any elbow to the appliance.*

ECHEL36IN-C, ECHEL48IN-C, ECHEL60IN-C ECHEL36STIN-C, ECHEL48STIN-C			
$V_1 + V_2$ Minimum		H Maximum	
1-1/2 ft.	457 mm	4 ft.	1.2 m
2-1/2 ft.	762 mm	9 ft.	2.7 m
3-1/2 ft.	1.1 m	12 ft.	3.6 m
5 ft.	1.5 m	15 ft.	4.5 m
$V_1 + H_1 + V_2$ = 63 ft. (19.2 m) Maximum H_{Total} = 23 ft. (7.1 m) Maximum			

Note: Use DVP Series components only.

ECHEL72IN-C			
$V_1 + V_2$ Minimum		H Maximum	
2-1/2 ft.	762 mm	4 ft.	1.2 m
3-1/2 ft.	1.1 m	9 ft.	2.7 m
4-1/2 ft.	1.4 m	12 ft.	3.6 m
6 ft.	1.8 m	15 ft.	4.5 m
$V_1 + H_1 + V_2$ = 63 ft. (19.2 m) Maximum H_{Total} = 23 ft. (7.1 m) Maximum			

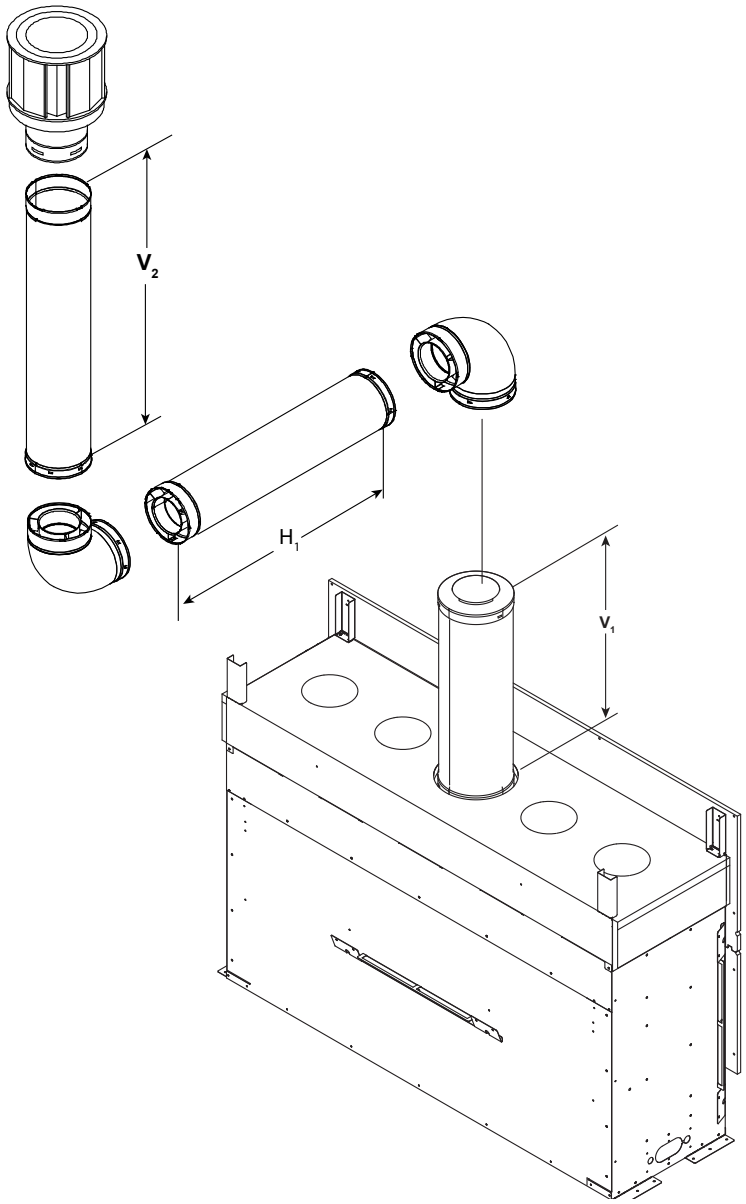

Figure 4.18

Top Vent - Vertical Termination
Venting with 3 elbows

WARNING! Risk of Fire!

DO NOT attach elbow directly to the appliance.

- *The ECHEL36IN-C/ECHEL36STIN-C, ECHEL48IN-C/ECHEL48STIN-C and ECHEL60IN-C require a minimum of 18 inches of vertical venting before attaching any elbow to the appliance.*
- *The ECHEL72IN-C requires a minimum of 30 inches of vertical venting before attaching any elbow to the appliance.*

ECHEL36IN-C, ECHEL48IN-C, ECHEL60IN-C ECHEL36STIN-C, ECHEL48STIN-C			
$V_1 + V_2$ Minimum		**$H_1 + H_2$ Maximum**	
1-1/2 ft.	457 mm	4 ft.	1.2 m
3 ft.	914 mm	9 ft.	2.7 m
4 ft.	1.2 m	12 ft.	3.7 m
5 ft.	1.5 m	15 ft.	4.6 m
$V_1 + V_2 + H_1 + H_2$ = 63 ft. (19.2 m) Maximum $H_1 + H_2$ = 23 ft. (7.1 m) Maximum			

Note: Use DVP Series components only.

ECHEL72IN-C			
$V_1 + V_2$ Minimum		**$H_1 + H_2$ Maximum**	
2-1/2 ft.	762 mm	4 ft.	1.2 m
4 ft.	1.2 m	9 ft.	2.7 m
5 ft.	1.5 m	12 ft.	3.7 m
6 ft.	1.8 m	15 ft.	4.6 m
$V_1 + V_2 + H_1 + H_2$ = 63 ft. (19.2 m) Maximum $H_1 + H_2$ = 23 ft. (7.1 m) Maximum			

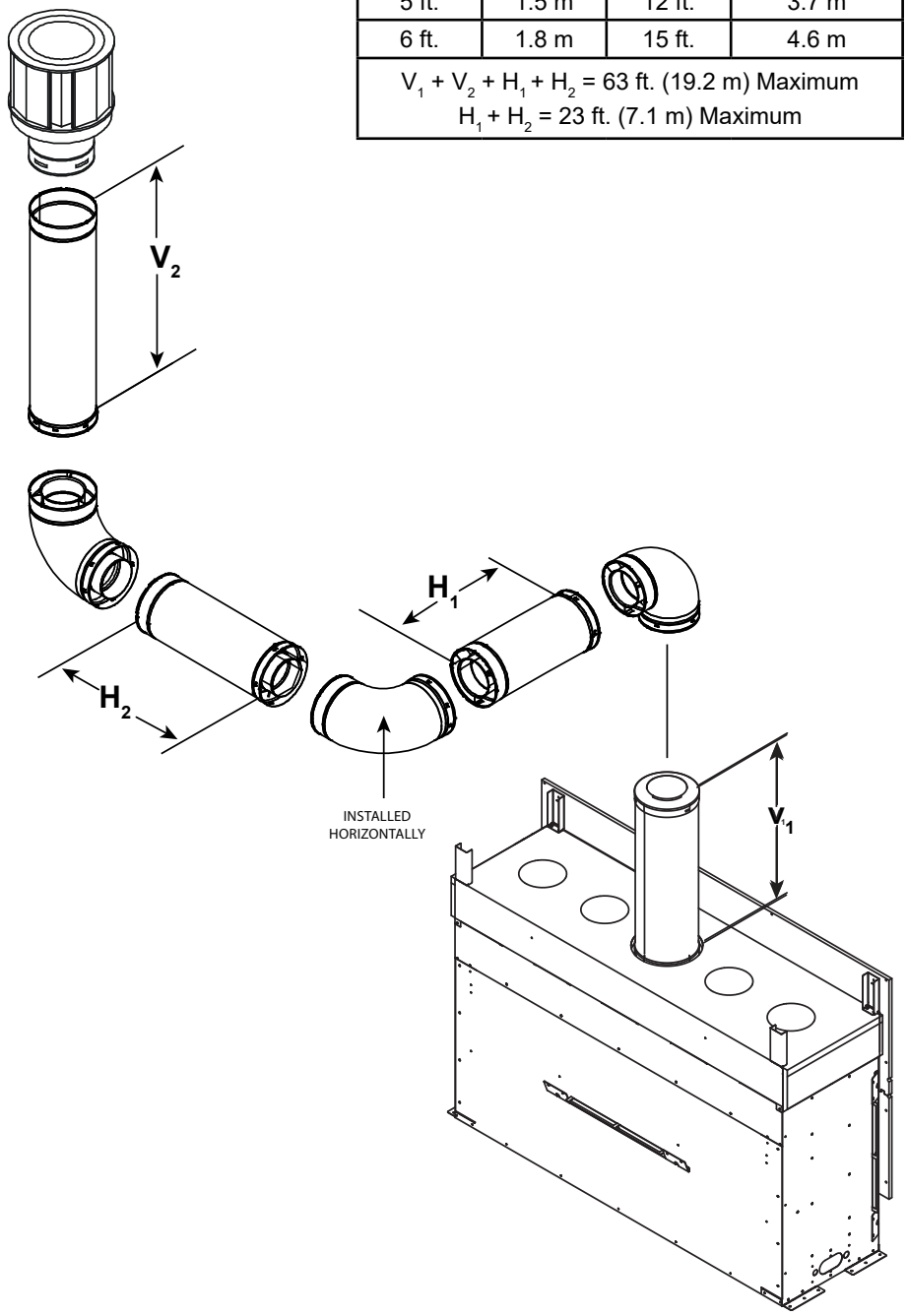

Figure 4.19

5 Vent Clearances and Vent Framing

A. Vent Clearances to Combustibles

WARNING! Risk of Fire! *Maintain air space clearance to vent.* ***DO NOT*** *pack insulation or other combustibles:*

- *Between ceiling firestops*
- *Between wall shield firestops*
- *Around vent system*

Failure to keep insulation or other material away from vent pipe could cause overheating and fire.

Note: Heat shields MUST overlap by a minimum of 1-1/2 in. (38 mm).
- **DVP heat shield** - designed to be used on a wall 4 in. to 7-1/4 in. (102 mm to 184 mm) thick.
- If wall thickness is less than 4 in. the existing heat shields must be field trimmed. If wall thickness is greater than 7-1/4 in. a DVP-HSM-B will be required.

(DVP Pipe Shown)

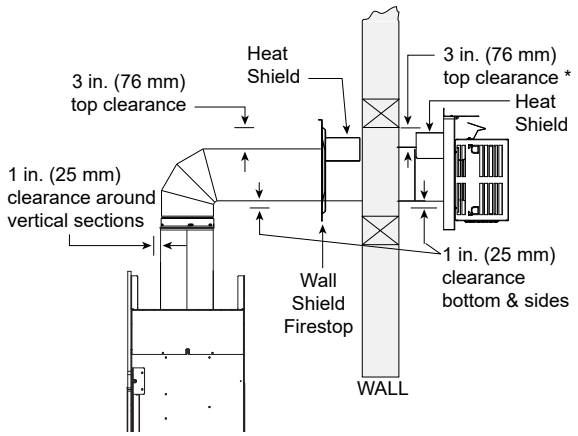

Figure 5.1 Horizontal Venting Clearances To Combustible Materials

B. Wall Penetration Framing/Firestops

Combustible Wall Penetration

Whenever a combustible wall is penetrated, you must frame a hole for the wall shield firestop(s). The wall shield firestop maintains minimum clearances and prevents cold air infiltration.

- The opening must be framed on all four sides using the same size framing materials as those used in the wall construction.
- SLP pipe - A wall shield firestop must be placed on each side of an interior wall. A minimum 1-1/2 in. (38 mm) overlap of attached heat shields must be maintained.
- DVP pipe - A wall shield firestop is required on one side only on interior walls. If your local inspector requires a wall shield firestop on both sides, then both wall shield firestops must have a heat shield (refer to Section 12.A.) attached to them.
- See Section 7.F. for information for regarding the installation of a horizontal termination cap.

Non-Combustible Wall Penetration

If the hole being penetrated is surrounded by non-combustible materials such as concrete, a hole with diameter one inch greater than the pipe is acceptable.

Whenever a non-combustible wall is penetrated, the wall shield firestop is only required on one side and no heat shield is necessary.

DO NOT PACK VENT FRAMING HOLE WITH INSULATION OR OTHER MATERIAL.

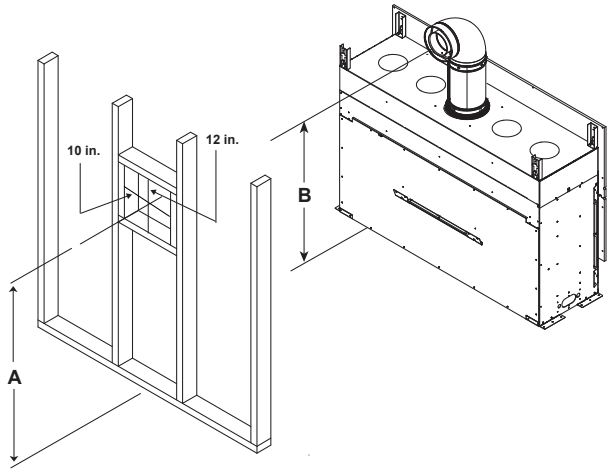

MODEL	A*	B
ECHEL36IN-C ECHEL36STIN-C ECHEL48IN-C ECHEL48STIN-C ECHEL60IN-C	64 in.	63 in.
	1.63 m	1.60 m
ECHEL72IN-C	76 in.	75 in.
	1.93 m	1.90 m

* Shows center of vent framing hole for top venting. The center of the hole is one (1) in. (25.4 mm) above the center of the horizontal vent pipe.

Note: Measurements for ECHEL36IN-C/ECHEL48IN-C and ECHEL60IN-C were taken with an 18 inch vertical section of pipe directly off the top of appliance.

Measurements for ECHEL72-C were taken with an 30 inch vertical section of pipe directly off the top of appliance.

Note: Center of the horizontal vent pipe to the vertical measuring surface of a trap cap is 5 inches (127 mm).

Figure 5.2 Wall Penetration

C. Ceiling Firestop/Floor Penetration Framing

WARNING! Risk of Fire! DO NOT pack insulation around the vent. Maintain clearances to vent to prevent overheating.

A ceiling firestop **MUST** be used between floors and attics.

- **DVP pipe only** - Frame an opening 10 in. by 10 in. (254 mm by 254 mm) whenever the vent penetrates a ceiling/floor (see Figure 5.3).
- Frame the area with the same sized lumber as used in ceiling/floor joist.
- The ceiling firestop may be installed above or below the ceiling joists when installed with an attic insulation shield. It must be under joists between floors that are not insulated. Refer to Figure 5.4.
- Secure with two fasteners on each side.

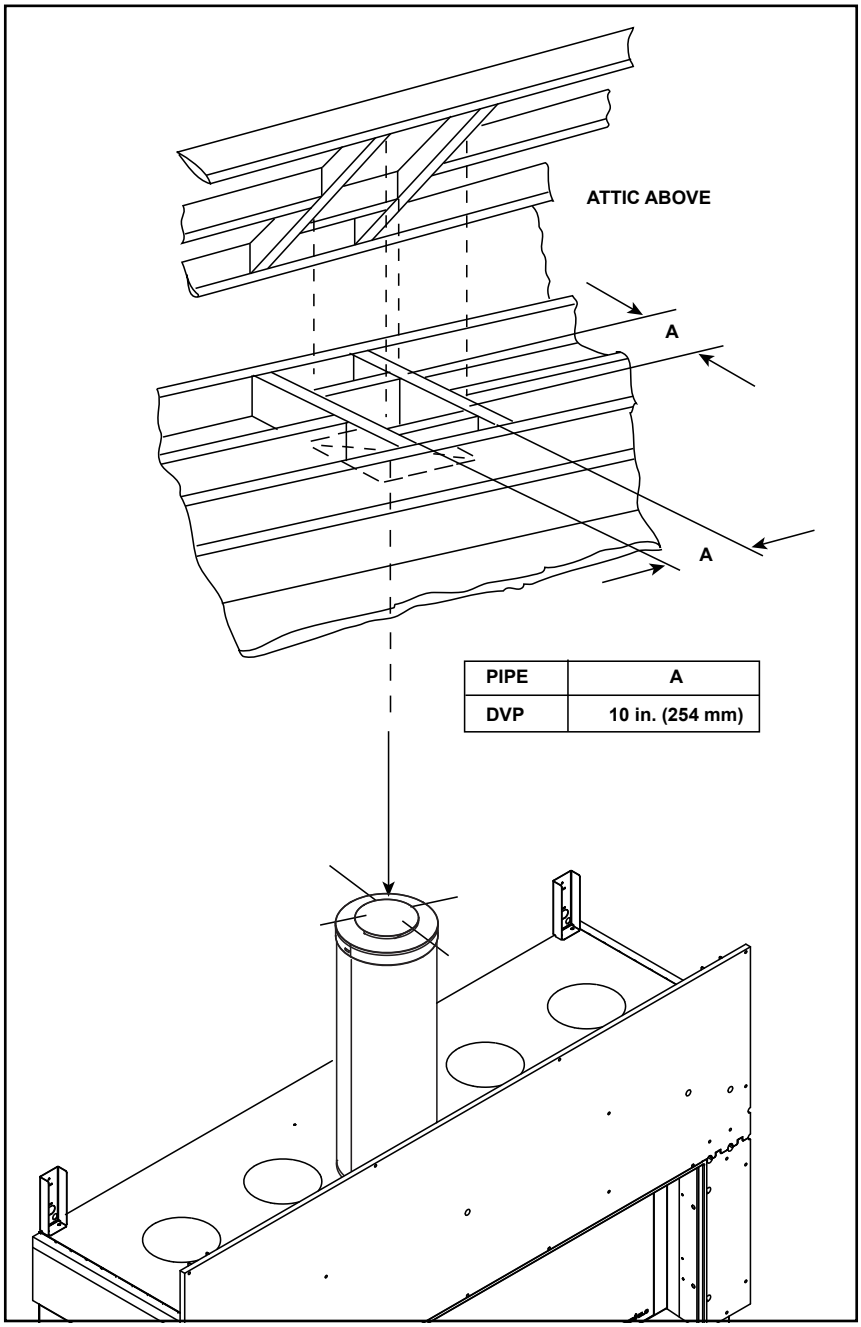

PIPE	A
DVP	10 in. (254 mm)

Figure 5.3 Installing Ceiling Firestop

D. Install Attic Insulation Shield

WARNING! Fire Risk. *The use of an attic shield is required to prevent loose materials or insulation from contacting the vent causing overheating and a fire.*

The International Fuel Gas Code requires an attic shield constructed of 26 gauge minimum steel that extends at least 2 in. (51 mm) above insulation.

- Attic insulation shields must meet specified clearances to combustible materials and be secured in place.
- An attic insulation shield kit is available from Hearth & Home Technologies. Contact your dealer to order. Install attic insulation shield according to instructions included with kit.

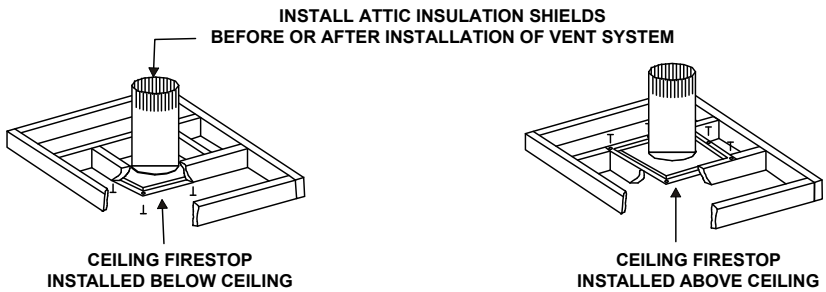

Figure 5.4 Installing the Attic Shield

6 Appliance Preparation

CAUTION! Risk of Cuts, Abrasions or Flying Debris. *Wear protective gloves and safety glasses during installation. Sheet metal edges are sharp.*

A. Top Standoff Preparation

1. Rotate the four (4) top standoffs up into vertical position.

   60 and 72 only: Push the standoff support tab on each standoff toward the center of the appliance and fasten it in place using the supplied screw and pilot hole. See Figure 6.1.

Standoff Shipping Position **Standoff Installation Position**

Figure 6.1 Standoffs Shown in Vertical Position (See-Through Appliance Shown)

2. Place a vent section on the starting collar.

WARNING! Risk of Fire! *DO NOT attach elbow directly to the appliance.*

- *The ECHEL36IN-C/ECHEL36STIN-C, ECHEL48IN-C/ECHEL48STIN-C and ECHEL60IN-C require a minimum of 18 inches of vertical venting before attaching any elbow to the appliance.*
- *The ECHEL72IN-C requires a minimum of 30 inches of vertical venting before attaching any elbow to the appliance.*

4. Place the 1/8 inch thick, square fiberglass gasket over the initial vent section.
5. Place the fiberglass rope ring over the gasket. Ensure both the gasket and the rope ring are seated on the top of the appliance. See Figure 6.2 and Figure 6.3.

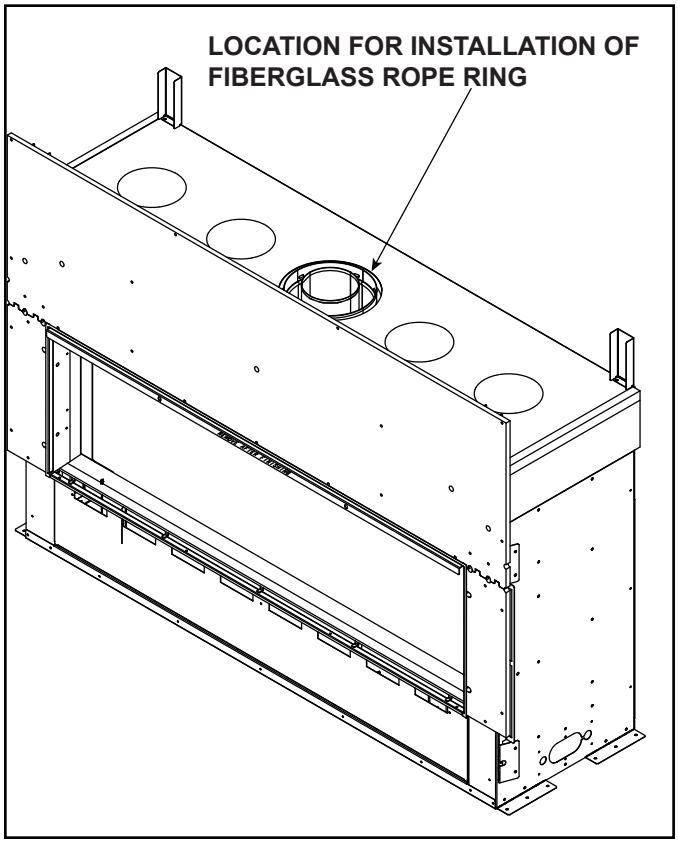

Figure 6.2 Location of Fiberglass Rope Ring

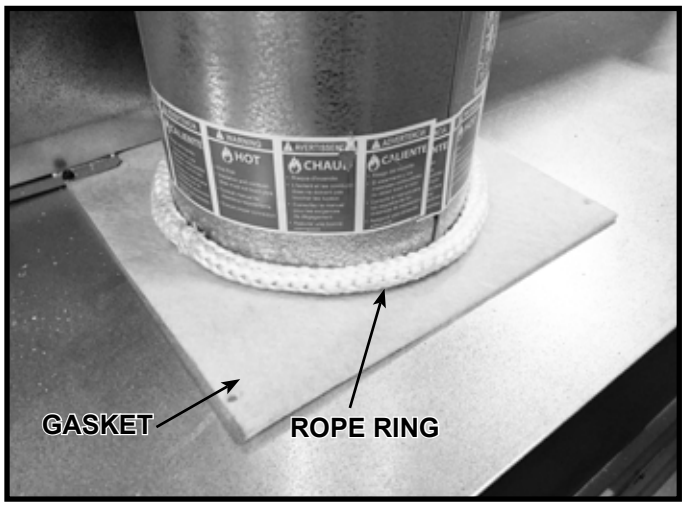

Figure 6.3 Fiberglass Rope Ring Installed

B. Prepare For Heat Management

Introduction

An optional heat management system allows the heat from the appliance to be redirected as desired.

An optional heat management system must be installed by a qualified service technician at the time of the appliance installation. Follow the instructions shipped with the kit for installation and operation.

NOTICE: *Additional clearances are required for heat management systems installations. Provisions must be made in advance to ensure fit within the framing.*

- Determine the heat management system(s) that will be installed.
- Remove the appropriate knockout(s).
- Remove insulation plug(s).
- Center the duct collar around the exposed hole and attach it to the appliance. See Figure 6.4.

  Note: Do this BEFORE final positioning of the appliance.
- Determine the location for the air register/fan housing assembly.

Reference the appropriate instructions included with the heat management system kit for the remaining installation steps.

Optional Heat Management Systems are:

- HEAT-ZONE®-GAS: The heat is diverted into an adjacent room.
- HEAT-OUT-GAS: The heat is diverted outside the home/building.
- ➔ Passive Heat (PH-MCE): The heat is vented into the room in which the appliance is installed through a discharge opening(s).
- Ducted Passive Heat (PHFR-MCE, PHSI-MCE) The heat is ducted into the room in which the appliance is installed through a discharge opening(s) using an insulated ducting system. PHSI-MCE side discharge available only for 36 and 48 inch sized appliances.

➔ The ECHELON-C models may utilize two Heat Management Systems, but not all are compatible.

Approved combinations are:

- HEAT-OUT-GAS: May be used with one HEAT-ZONE-GAS or one of the Passive Heat options (PH-MCE, PHFR-MCE, PHSI-MCE).
- HEAT-ZONE-GAS: May be used with one HEAT-OUT-GAS, one of the Passive Heat options (PH-MCE, PHFR-MCE, PHSI-MCE), or one additional HEAT-ZONE-GAS.
- Passive Heat (PH-MCE, PHFR-MCE, PHSI-MCE): May be used with HEAT-ZONE-GAS or one HEAT-OUT-GAS. The dedicated knockouts must be used only as indicated in Figure 6.4.

WARNING! Risk of Fire! *DO NOT block passive heat registers! Overheating of appliance and combustible materials will occur.*

WARNING! Risk of Fire! DO NOT *remove heat management seal plate unless a heat management System will be connected at that location. Overheating of appliance and combustible materials will occur.*

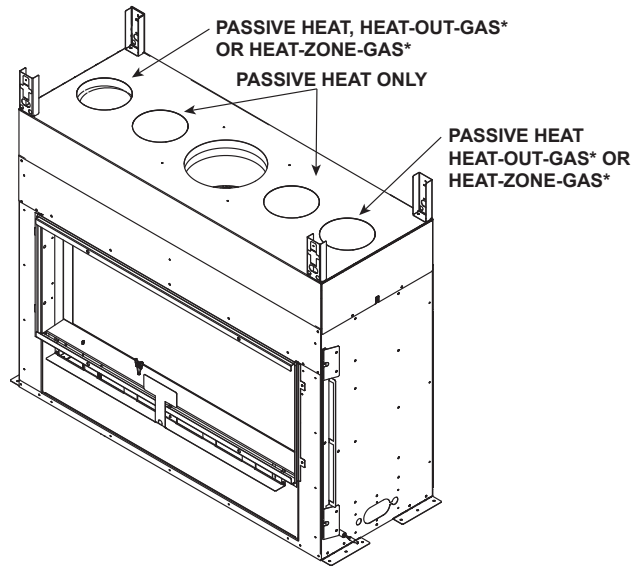

***Note: Remove only one of the outside knockouts if installing the HEAT-OUT-GAS or HEAT-ZONE-GAS. The other knockout is removed only if another heat management system is installed.**

Figure 6.4

Heat-Zone-Gas Adapter Kit (HZLIN-ADP)

The HZLIN-ADP adapter kit is required for use with the Heat-Zone-Gas Kit and is necessary when the optional Heat-Zone-Gas Kit is installed on the ECHELON-C models. See Figure 6.5.

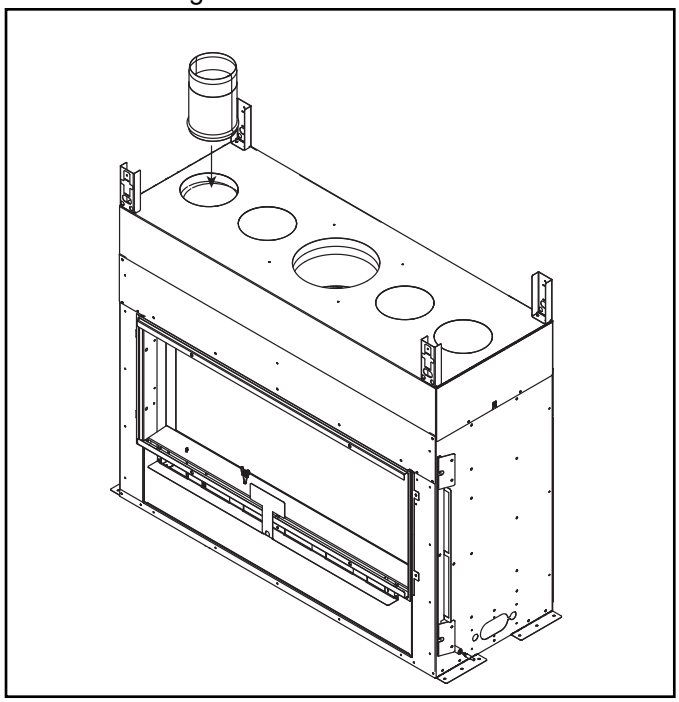

Figure 6.5 Heat-Zone-Gas Linear Adapter Collar

C. Securing and Leveling the Appliance

Setting the Fireplace into the Framing

The left and right nailing tabs were designed as a means to ensure the fireplace is mounted flush with the framing materials. See Figures 6.6-6.8.

1. The shipping flanges protrude further out from the appliance than the side standoffs. The shipping flange may be bent upward or broken off in order to place the appliance into position in the framing.
2. Bend out all nailing tabs. The see-through model will have eight nailing tabs. The single-sided model will have four nailing tabs.
3. Screw each nailing tab to the adjoining framing material. Ensure that the one inch air space clearance is maintained on the sides and back of the fireplace. See Figures 3.8-3.12 for framing and clearance details.

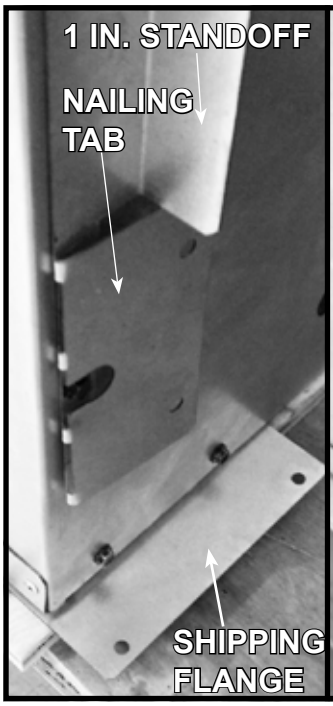

Figure 6.6 Nailing Tabs Shipping Position

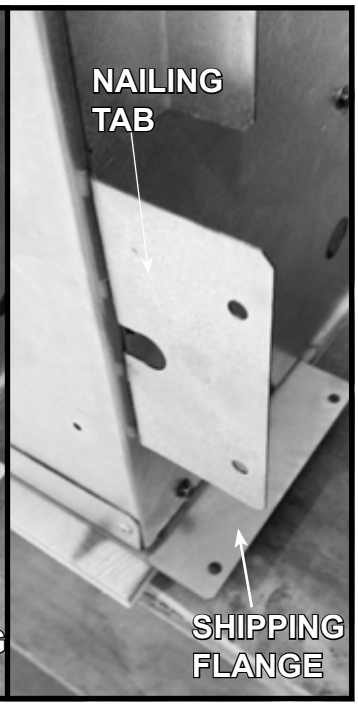

Figure 6.7 Nailing Tabs Installation Position

Securing and Leveling the Appliance

⚠ WARNING

Risk of Fire!

Prevent contact with:

- *Sagging or loose insulation*
- *Insulation backing or plastic*
- *Framing and other combustible materials*

***DO NOT remove standoffs or** notch the framing around the appliance standoffs.*

Failure to maintain air space clearance could cause overheating and fire.

Block openings into the chase to prevent entry of blown-in insulation. Make sure insulation and other materials are secured.

The diagram shows how to properly position and secure the appliance. See Figure 6.8. Nailing tabs are provided to secure the appliance to the framing members.

- Bend out nailing tabs on each side.
- Place the appliance into position.
- Keep nailing tabs flush with the framing.
- Level the appliance from side to side and front to back.
- Shim the appliance as necessary. It is acceptable to use wood shims underneath the appliance.
- Secure the appliance to the framing by using nails or screws through the nailing tabs. Use a minimum of one fastener per nailing tab.
- Optional: Secure the appliance to the floor by inserting two screws through the pilot holes at the bottom of the appliance.

Some figures in manual show the fireplace installed on the floor. However, this fireplace can be elevated off the floor provided that the fireplace is properly supported by framing materials and the ceiling clearances are maintained.

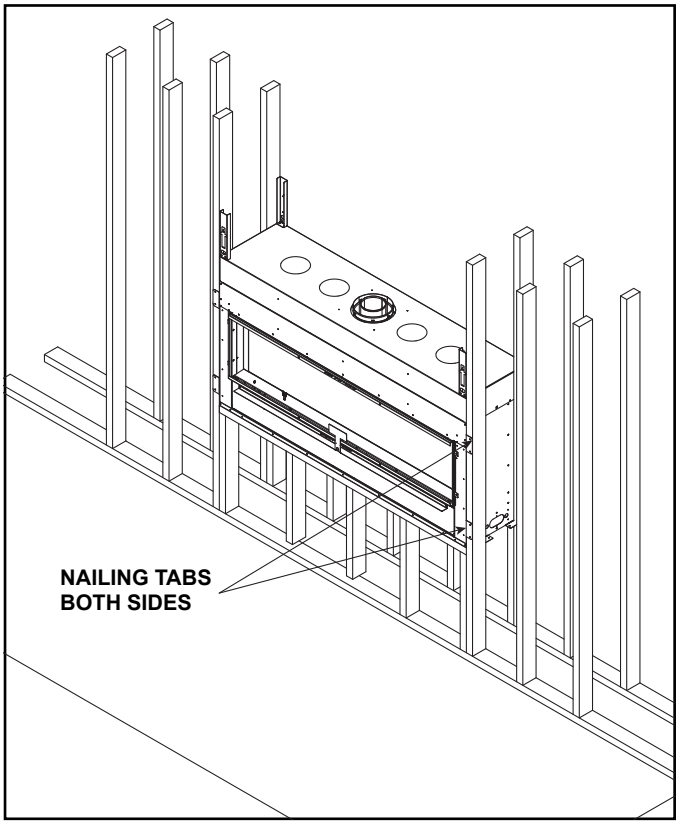

Figure 6.8 Proper Positioning and Securing of an Appliance

D. Installing Non-Combustible Facing Material

WARNING! Risk of Fire!

- *Follow these instructions exactly.*
- *Facing materials must be installed properly to prevent fire.*
- *No materials may be substituted without authorization by Hearth & Home Technologies.*

- The required non-combustible material is shipped within a protective sleeve with the appliance. Remove the non-combustible facing pieces from the protective cardboard sleeve.
- Locate the smaller piece of non-combustible material. This piece is designed to snap apart into both left and right side pieces. Align center score mark with straight edge to snap apart material into two pieces.
- Install non-combustible facing material to the appliance using the 1-1/4 inch screws supplied in the manual bag assembly. There may be extra screws included.
- Attach top board to the framing members with regular sheetrock screws or nails. See Figure 6.9.
- Attach left and right side pieces to framing members with regular sheetrock screws or nails.
- Use a wet or dry towel or soft brush to remove dust or dirt from facing material.
- See Section 10 for finishing materials guidelines.

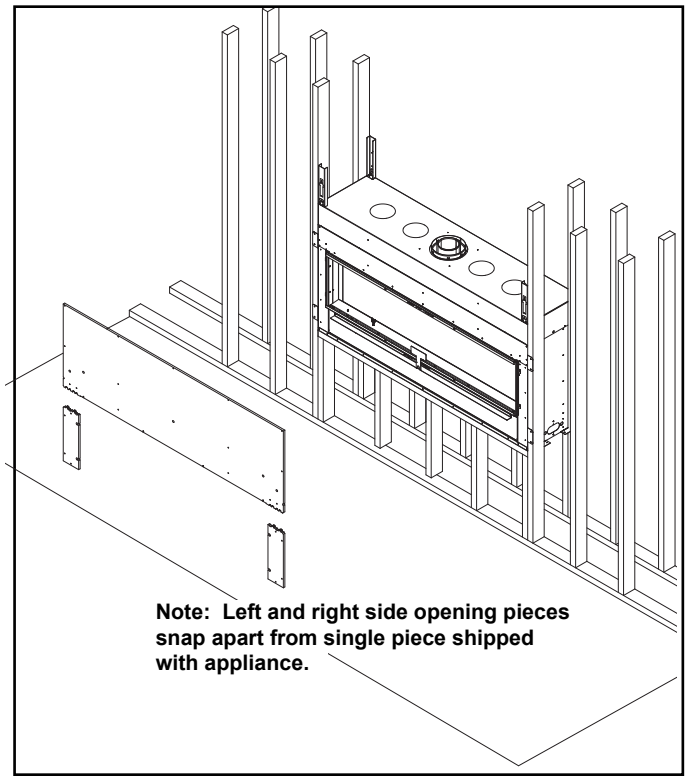

Figure 6.9 Install Factory-Included Non-Combustible Facing Material

7 Venting

A. Assemble Vent Sections (DVP Pipe Only)

WARNING! Risk of Fire or Explosion! *Vent sections MUST be installed correctly. Improperly installed vent sections could leak or cause appliance to overheat.*

Attach Vent to the Firebox Assembly

Note: The end of the pipe sections with the lanced tabs will face toward the appliance.

Attach the first pipe section to the starting collar:

- Lanced pipe end of the starting collar.
- Inner pipe over inner collar.
- Push the pipe section until all lanced tabs snap in place.
- Lightly tug on pipe to confirm it has locked.

Requirement for Commercial, Multi-family (Multi-level exceeding two stories), or High-Rise Applications

WARNING! Risk of Fire or Explosion! DO NOT *break silicone seals on slip sections. Use care when removing termination cap from slip pipe. If slip section seals are broken during removal of the termination cap, vent could leak.*

All outer pipe joints must be sealed using one of the methods below, including the slip section that connects directly to the horizontal termination cap.

- Apply a bead of silicone sealant (300 ºF minimum continuous exposure rating) inside the female outer pipe joint prior to joining sections. See Figure 7.1 **OR**

  Apply a bead of silicone sealant (300 ºF minimum continuous exposure rating) to the outside of connecting joint after joining sections **OR**

  Apply aluminum foil tape (300 ºF minimum continuous exposure rating) to the outside of connecting joint after joining sections. On horizontal pipe runs, it is recommended that the tape seam is positioned on the bottom side of the vent pipe.
- Only outer pipes need to be sealed. All unit collar, pipe, slip section, elbow and cap outer flues shall be sealed in this manner, unless otherwise stated.

Assemble Pipe Sections

Per Figure 7.2:

- Start the inner pipe on the lanced end of section A into the flared end of section B.
- Start the outer pipe of section A over the outer pipe of section B.
- Once both vents sections are started, push firmly until all lanced tabs lock into place.
- Lightly tug on the pipe to confirm the tabs have locked.

It is acceptable to use screws no longer than 1/2 in. (13 mm) to hold outer pipe sections together. If predrilling holes, **DO NOT** penetrate inner pipe.

For 90º and 45º elbows that are changing the vent direction from horizontal to vertical, one screw minimum should be put in the outer flue at the horizontal elbow joint to prevent the elbow from rotating. Use screws no longer than 1/2 in. (13 mm). If predrilling screw holes, **DO NOT** penetrate inner pipe.

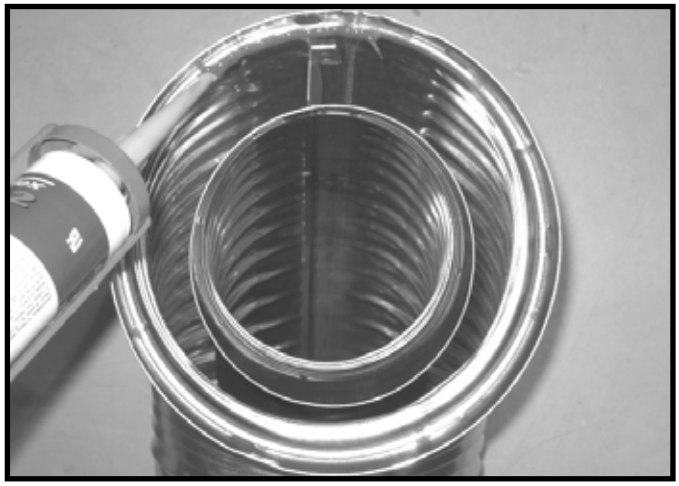

Figure 7.1 High Temperature Silicone Sealant

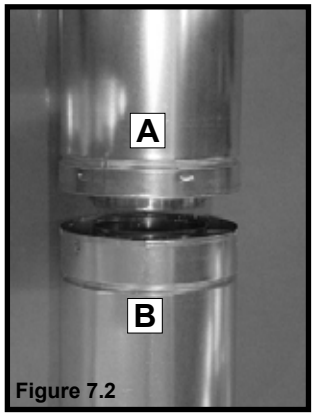

Figure 7.2

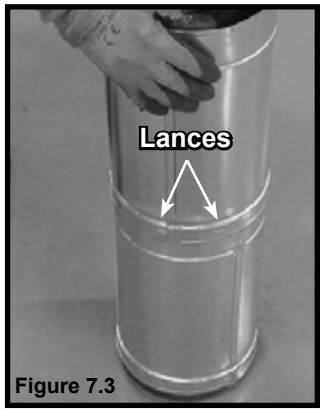

Figure 7.3

Note: Make sure that the seams are not aligned to prevent unintentional disconnection.

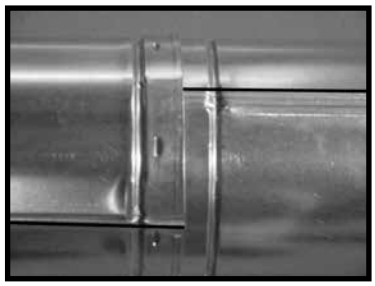

CORRECT

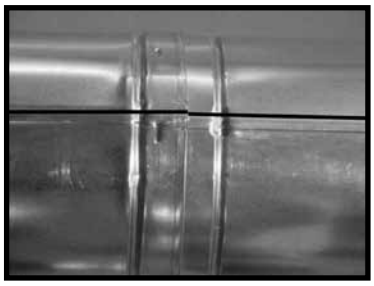

Figure 7.4 Seams **INCORRECT**

NOTICE: *When installing a vent system with an HRC termination cap, all pipe system joints shall be sealed using a high temperature silicone sealant (300 °F minimum continuous exposure rating).*

- *Apply a bead of silicone sealant (300 °F minimum continuous exposure rating) inside the female outer pipe joint prior to joining sections.*
- *Only outer pipes are sealed, sealing the inner flue is not required.*
- *All unit collar, pipe, slip section, elbow and cap outer flues shall be sealed.*

B. Assemble Slip Sections

- Slide the inner flue of the slip section into the inner flue of the pipe section and the outer flue of the slip section over the outer flue of the pipe section. See Figure 7.5.
- Slide together to the desired length.

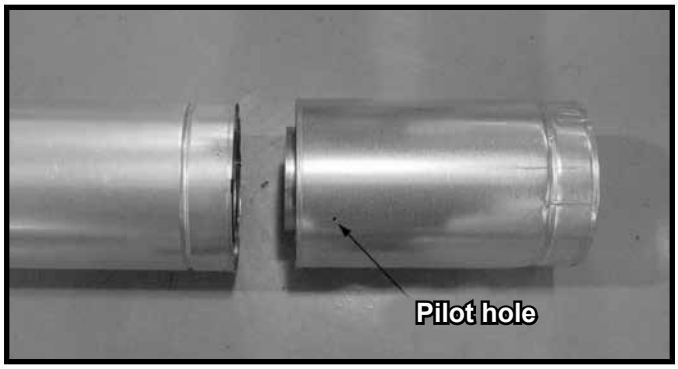

Figure 7.5 Slip Section Pilot Holes

- Maintain a 1-1/2 in. (38 mm) overlap between the slip section and the pipe section.
- Secure the pipe and slip section with two screws no longer than 1/2 in. (13 mm), using the pilot holes in the slip section. See Figure 7.6.

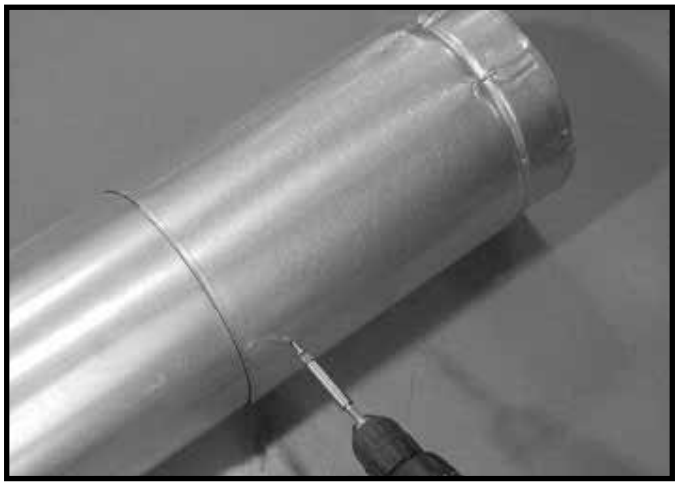

Figure 7.6 Screws into Slip Section

- Continue adding pipe as necessary following instructions in “Assembling Pipe Sections.”

NOTICE: *If slip section is too long, the inner and outer flues of the slip section can be cut to the desired length.*

C. Secure the Vent Sections

WARNING! Risk of Fire, Explosion or Asphyxiation! *Improper support could allow vent to sag and separate. Use vent run supports and connect vent sections per installation instructions.* ***DO NOT*** *allow vent to sag below connection point to appliance.*

- Vertical runs originating off the top of the appliance, with no offsets, must be supported every 8 feet (2.44 m) after the maximum allowed 25 feet (7.62 m) of unsupported rise.
- Vertical runs originating off the rear of the appliance, or after any elbow, must be supported every 8 feet (2.44 m).
- Horizontal runs must be supported every 5 feet (1.52 m).
- Vent supports or plumbers strap (spaced 120º apart) may be used to support vent sections. See Figures 7.7 and 7.8.
- Wall shield firestops may be used to provide horizontal support to vent sections.
- SLP ceiling firestops have tabs that may be used to provide vertical support.

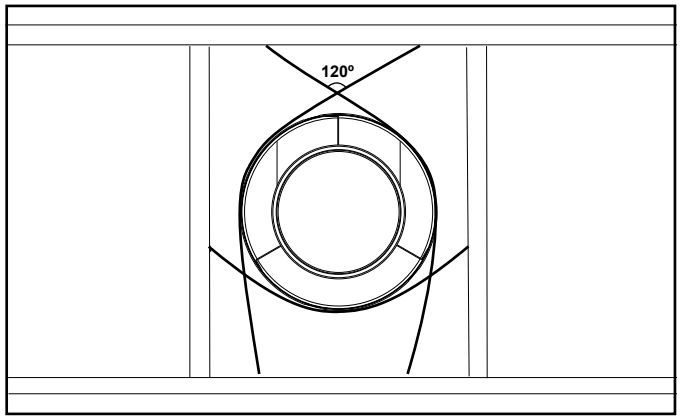

Figure 7.7 Securing Vertical Pipe Sections

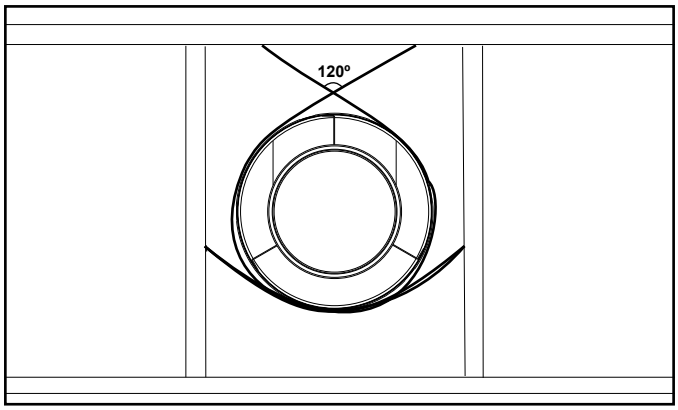

Figure 7.8 Securing Horizontal Pipe Sections

D. Disassemble Vent Sections

- Rotate either section (see Figure 7.9) so the seams on both pipe sections are aligned as shown in Figure 7.10.
- Pull carefully to separate the pieces of pipe.

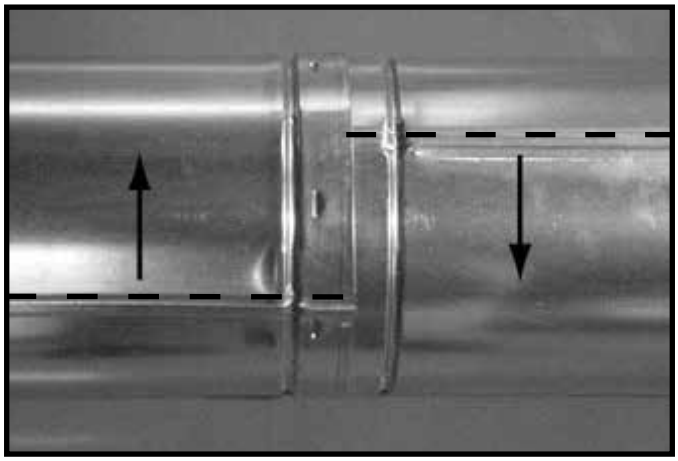

Figure 7.9 Rotate Seams for Disassembly

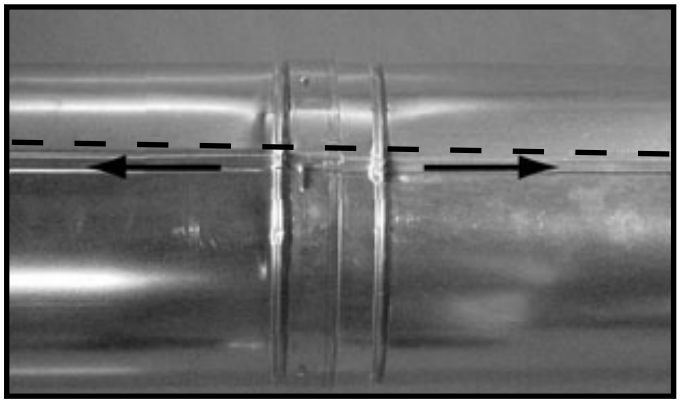

Figure 7.10 Align and Disassemble Vent Sections

E. Vertical Termination Requirements

Install and Seal Metal Roof Flashing

- See minimum vent heights for various pitched roofs (Section 4, Figure 4.1) to determine the length of pipe to extend through the roof.
- Slide the roof flashing over the pipe sections extending through the roof as shown in Figure 7.11.
- Use an elastomeric or silicone sealant with a minimum of 150 ºF temperature rating to seal the metal roof flashing.

Note: When installing a silicone or EPDM pipe flashing boot on a metal roof, it is recommended to put a bead of 100% silicone sealant where the boot contacts the vent pipe to prevent the entry of water. Follow the manufacturer's recommendations when installing the boot. Climate regions with frequent temperatures below - 50 °F (-45.6 °C) should use a silicone flashing boot.

NOTICE: *Failure to properly seal the roof flashing and pipe seams could permit entry of water.*

- Seal the gap between the roof flashing and the outside diameter of the pipe.
- Seal the perimeter of the flashing where it contacts the roof surface. See Figure 7.11.
- Seal the exposed pipe section seams that are located above the roof.

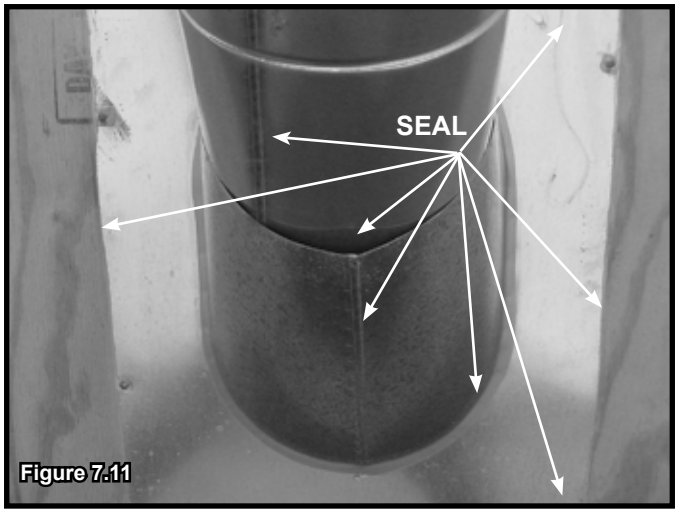

Figure 7.11

Assemble and Install Storm Collar

CAUTION! Risk of Cuts, Abrasions or Flying Debris. *Wear protective gloves and safety glasses during installation. Sheet metal edges are sharp.*

- Slide the storm collar onto the exposed pipe section and align brackets.
- Insert a bolt (provided) through the brackets and install nut. Do not completely tighten.

Figure 7.12 Insert Bolt into Brackets

- Slide the assembled storm collar down the pipe section until it rests on the roof flashing. See Figure 7.12.
- Tighten nut and make sure the collar is tight against the pipe section.
- Seal around the top of the storm collar. See Figure 7.13.

Install Vertical Termination Cap

- Attach the vertical termination cap by sliding the inner collar of the cap into the inner flue of the pipe section while placing the outer collar of the cap over the outer flue of the pipe section.
- Secure the cap by driving three self-tapping screws (supplied) through the pilot holes in the outer collar of the cap into the outer flue of the pipe. See Figure 7.13.

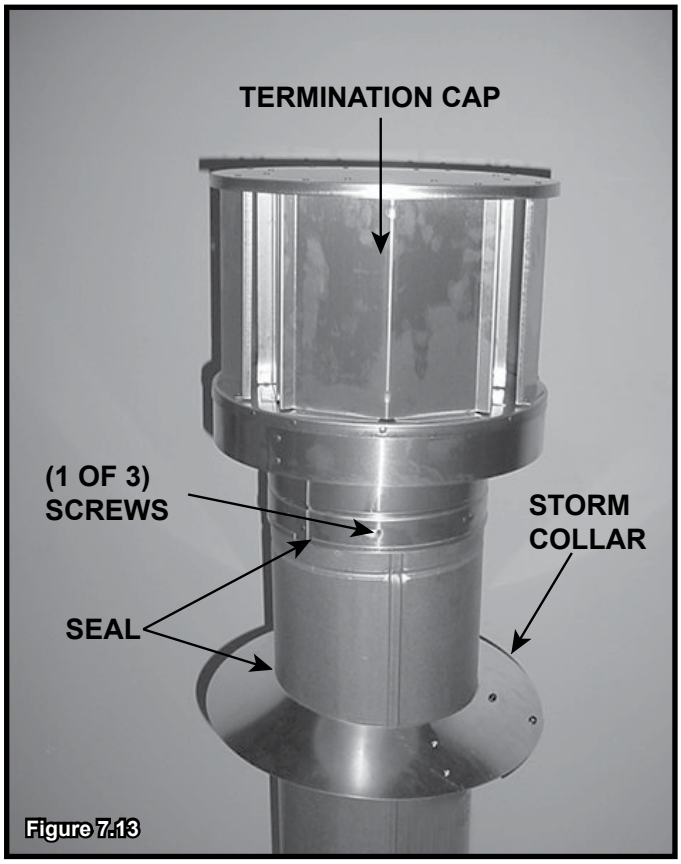

Figure 7.13

F. Horizontal Termination Requirements

Heat Shield Requirements for Horizontal Termination

WARNING! Risk of Fire! *To prevent overheating and fire, heat shields must extend through the entire wall thickness.*

- ***DO NOT*** *remove the heat shields attached to the wall shield firestop and the horizontal termination cap (shown in Figure 7.14).*
- *Heat shields must overlap 1-1/2 in. (38 mm) minimum.*

There are two sections of the heat shield. One section is factory-attached to the wall shield firestop. The other section is factory-attached to the cap. See Figure 7.14.

If the wall thickness does not allow the required 1-1/2 in. (38 mm) heat shield overlap when installed, an extended heat shield must be used.

- If the wall thickness is less than 4 in./102 mm (DVP) or 4-3/8 in./ 111 mm (SLP), the heat shields on the cap and wall shield firestop must be trimmed. A minimum 1-1/2 in. (38 mm) overlap MUST be maintained.
- Use an extended heat shield if the finished wall thickness is greater than 7-1/4 in. (184 mm).
- The extended heat shield may need to be cut to length maintaining sufficient length for a 1-1/2 in. (38 mm) overlap between heat shields.
- Attach the extended heat shield to either of the existing heat shields using the screws supplied with the extended heat shield. Refer to vent components diagrams in the back of this manual.
- Rest the small leg on the extended heat shield on top of the pipe section to properly space it from the pipe section.

Important Notice: Heat shields may not be field constructed.

Install Horizontal Termination Cap (DVP and SLP Pipe)

WARNING! Risk of Fire! *The telescoping flue section of the termination cap MUST be used when connecting vent.*

- *1-1/2 (38 mm) minimum overlap of flue telescoping section is required.*

Failure to maintain overlap could cause overheating and fire.

- Vent termination must not be recessed in the wall. Siding may be brought to the edge of the cap base.
- Flash and seal as appropriate for siding material at outside edges of cap.
- When installing a horizontal termination cap, follow the cap location guidelines as prescribed by current **ANSI Z223.1** and **CAN/CGA-B149** installation codes and refer to Section 4 of this manual.

CAUTION! Risk of Burns! *Local codes may require installation of a cap shield to prevent anything or anyone from touching the hot cap.*

NOTICE: *For certain exposures which require superior resistance to wind-driven rain penetration, a flashing kit and HRC caps are available. When penetrating a brick wall, a brick extension kit is available for framing the brick.*

Note: When using termination caps with factory-supplied heat shield attached, no additional wall shield firestop is required on the exterior side of a combustible wall.

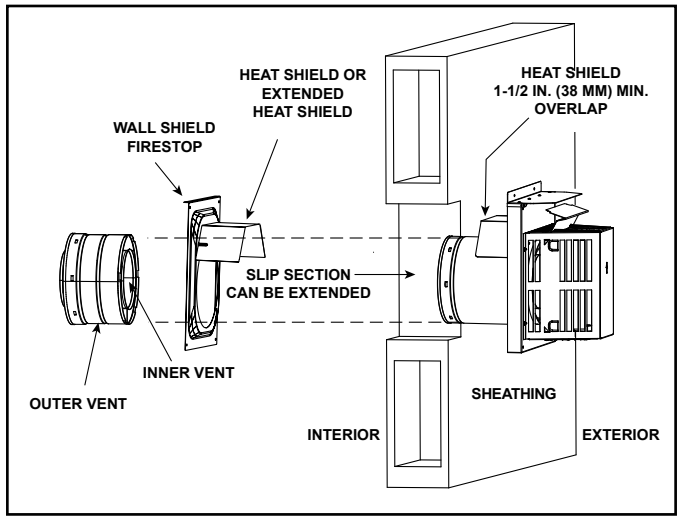

Figure 7.14 Venting Through the Wall

8 Electrical Information

A. General Information

WARNING! Risk of Shock! DO NOT *wire 110-120 VAC to the ignition module or to the appliance wall switch. (IPI)*

Incorrect wiring will damage controls.

NOTICE: *This appliance must be electrically wired and grounded in accordance with local codes or, in the absence of local codes, with* **National Electric Code ANSI/NFPA 70-latest edition** *or the* **Canadian Electric Code CSA C22.1.**

- Wire the appliance circuit using a minimum 14-2 AWG with ground to unswitched 110-120 VAC. This is required for proper operation of the appliance (IntelliFire® ignition).
- A 110-120 VAC circuit for this product must be protected with ground-fault circuit interrupter protection, in compliance with the applicable electrical codes, when it is installed in locations such as in bathrooms or near sinks.
- Low voltage and 110-120 VAC voltage cannot be shared within the same wall box.
- In some instances, the spark ignition of the fireplace may cause intermittent, non-damaging, interference during the lighting sequence with a TV plugged into the same circuit. It is recommended that the fireplace and TV use different circuits to mitigate the interference potential. If interference is occurring on the same circuit, the use of surge protectors may help alleviate the interference.

Junction Box Installation

WARNING! Risk of Shock! *Label all wires prior to disconnection when servicing controls. Wiring errors can cause improper and dangerous operation. Verify proper operation after servicing.*

1. Remove bottom panel by removing two screws. Screw locations are shown in Figure 8.1. After removing two screws, gently lift the panel and pull forward, avoiding contact with the non-combustible board if possible.
2. Remove insulation.
3. Remove screws on left and right sides of component heat shield and lift it out of the control cavity. See Figure 8.3 for location of component heat shield screws.
4. Remove the one screw that secures the junction box to the control tray panel. See Figure 8.2.

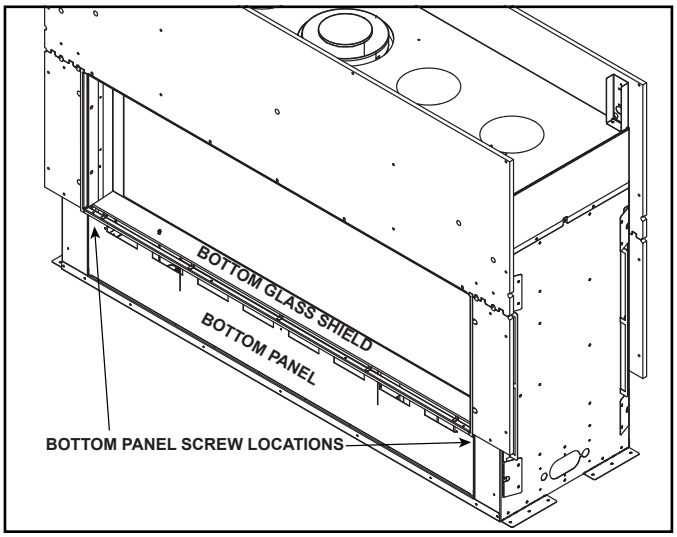

Figure 8.1 Bottom Panel Location

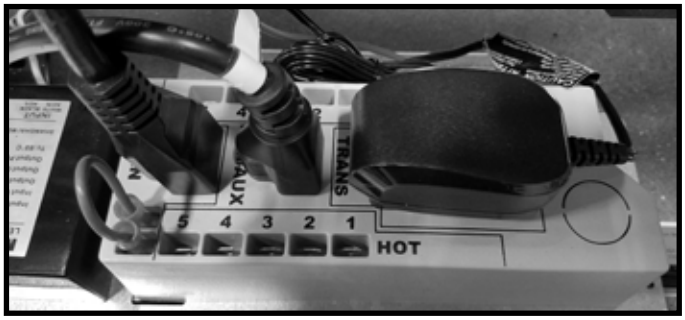

Figure 8.2 Junction Box Detail

5. Route the wire through the strain relief in the outer wrap and up through the cutout located on the metal tray under the junction box.
6. Make the connection inside the junction box to the 110-120V wire. Connect green to the ground nut, black to black, and white to white.
7. To reattach the junction box, insert one end of the junction box in the slot provided and securely screw the other end of the junction box to the control tray panel.
8. Reinstall component heat shield and insulation.

CAUTION! Risk of Overheating! *Component heat shield MUST be installed before operating appliance. Electrical components will be damaged.*

In the event that the junction box may need to be accessed or installed after finish methods have been applied, access is possible by removing the bottom glass shield.

Accessories Requirements

- This appliance may be used with a wall switch, wall mounted thermostat and/or a remote control. Use of a wall switch will limit the functionality of the remote. A power vent can not be used with a wall switch.

Wiring for optional Hearth & Home Technologies approved accessories should be done now to avoid reconstruction. Follow instructions that come with those accessories.

Electrical Service and Repair

WARNING! Risk of Shock! *Label all wires prior to disconnection when servicing controls. Wiring errors could cause improper and dangerous operation. Verify proper operation after servicing.*

WARNING! Risk of Shock! *Replace damaged wire with type 105º C rated wire. Wire must have high temperature insulation.*

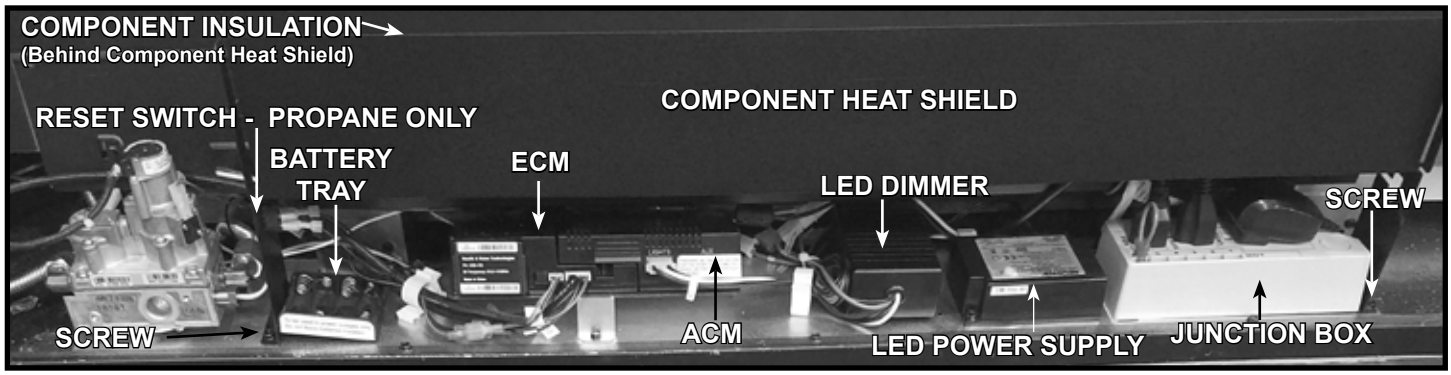

Figure 8.3 Valve Cavity (Lower Access Panel Removed)

B. Wiring Requirements

IntelliFire Touch® Ignition System Wiring

- Wire the appliance junction box to 110-120 VAC for proper operation of the appliance.

***WARNING! Risk of Shock or Explosion! DO NOT** wire IPI controlled appliance junction box to a switched circuit. Incorrect wiring will override IPI safety lockout.*

- Refer to Figure 8.4 IntelliFire Touch (IPI) Wiring Diagram.
- This appliance is equipped with an IntelliFire control valve which operates on a 6 volt system.

***NOTICE:** Batteries should only be used as a power source in the event of an emergency power outage. Batteries should not be used as a primary long-term power source. Batteries tend to corrode over time. When using batteries as a power source, the 6 volt transformer must be unplugged from the receptacle.*

Do not store batteries in the battery pack when the appliance is powered by the 6 volt transformer connected to permanent electrical service.

Accessories Requirements

- This appliance ships standard with a remote control.

Wiring for optional Hearth & Home Technologies approved accessories should be done now to avoid reconstruction. Follow instructions that come with those accessories.

The junction box, control module, LED power supply and wall switch receiver can be accessed by removing the bottom glass shield and component heat shield. The decorative barrier front must be removed to access these components. See Figure 8.4.

***CAUTION! Risk of Overheating!** Component heat shield MUST be installed before operating appliance. Electrical components will be damaged.*

***CAUTION! Risk of Overheating!** DO NOT remove component insulation from top of component heat shield. Electrical components will be damaged.*

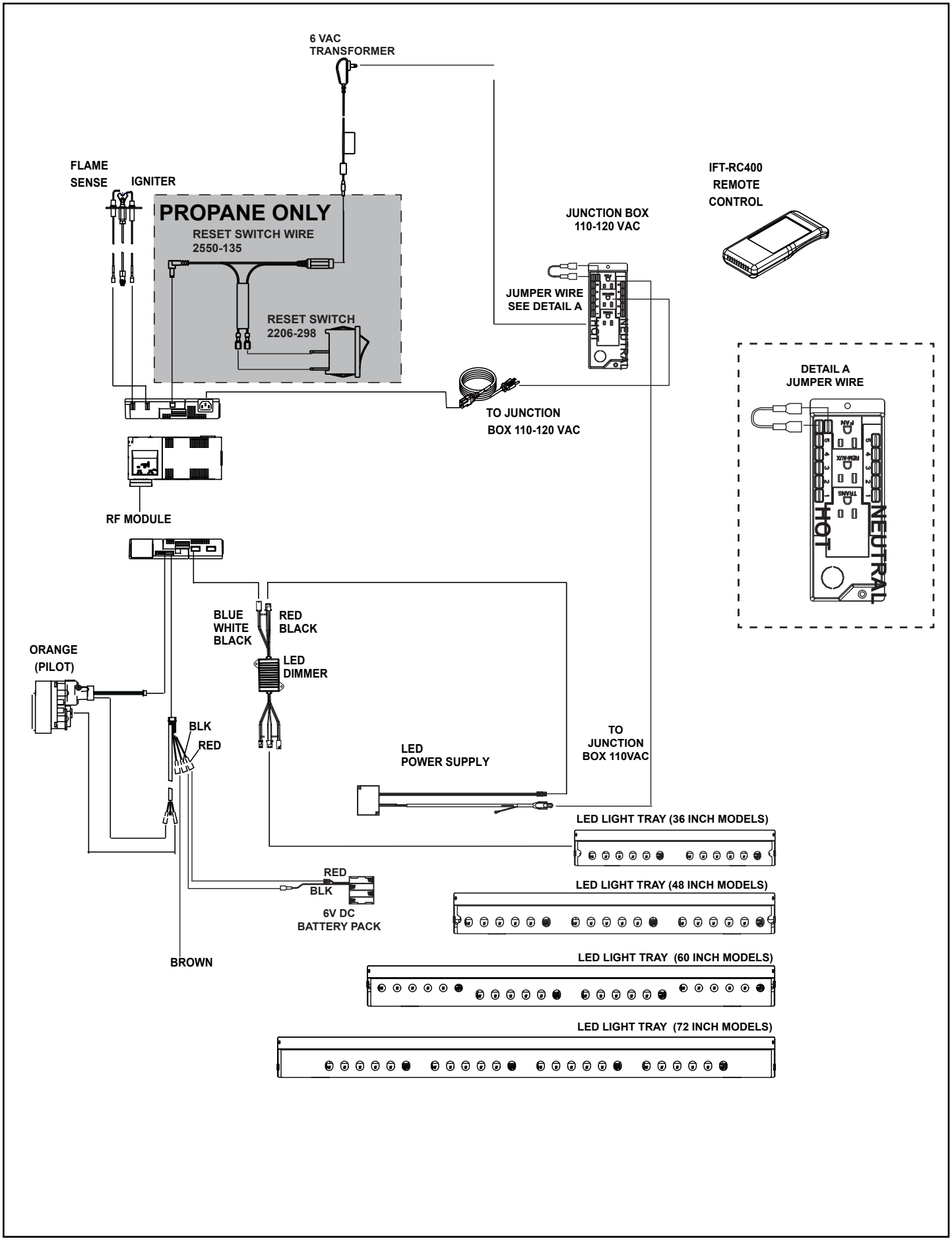

Figure 8.4 IntelliFire Touch Wiring Diagram

9 Gas Information

A. Fuel Conversion

- Make sure the appliance is compatible with available gas types.
- Conversions must be made by a qualified service technician using Hearth & Home Technologies specified and approved parts.

B. Gas Pressure

⚠ WARNING

Fire Risk.

Risk of Fire! Risk of Explosion!

Incorrect pressure will damage valve.

- Isolate gas supply piping BEFORE pressure testing gas line at test pressures above 1/2 psig.
- Close the manual shutoff valve BEFORE pressure testing gas line at test pressures equal to or less than 1/2 psig.

- Optimum appliance performance requires proper input pressures.
- Gas line sizing requirements will be determined in ANSI Z223.1 National Fuel Gas Code in the USA and CAN/CGA B149 in Canada.
- Pressure requirements when in operation are:

Gas Pressure	Natural Gas	Propane
Minimum inlet pressure	5.0 in. w.c.	11.0 in. w.c.
Maximum inlet pressure	10.0 in. w.c.	13.0 in. w.c.
Manifold pressure	3.5 in. w.c.	10.0 in. w.c.

- Verify inlet pressures. Verify minimum pressures when other household gas appliances are operating.
- Install regulator upstream of valve if line pressure is greater than 1/2 psig.
- Valve pressure taps are accessible by removing the decorative barrier front and the bottom glass shield.

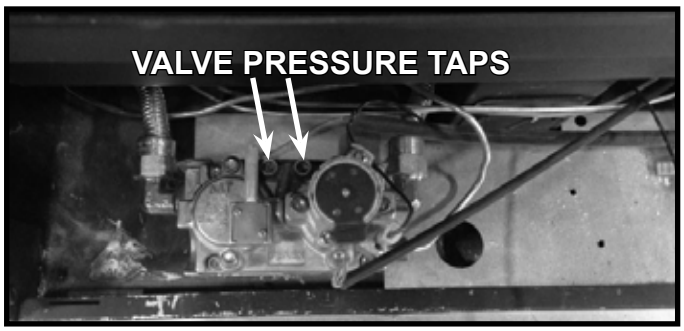

Figure 9.1 Valve Pressure Taps

Note: Have the gas supply line installed in accordance with local codes, if any. If not, follow ANSI Z223.1. Installation should be done by a qualified installer approved and/or licensed as required by the locality. (In the Commonwealth of Massachusetts installation must be performed by a licensed plumber or gas fitter).

Note: A listed (and Commonwealth of Massachusetts approved) 1/2 in. (13 mm) T-handle manual shut-off valve and flexible gas connector are connected to the 1/2 in. (13 mm) control valve inlet.

- **If substituting for these components, please consult local codes for compliance.**

C. Gas Service Access

Note: This appliance does include a manual gas shutoff valve that is located in the valve compartment. This manual gas shutoff valve is accessible for service by removing the decorative barrier front and the bottom glass shield. The valve is most accessible if it is located forward in the control cavity of the appliance.

Depending upon local code, an additional manual gas shutoff, in a readily accessible area may be required and located upstream from the appliance.

The bottom panel is removable if finishing material is not installed. See Figure 9.2.

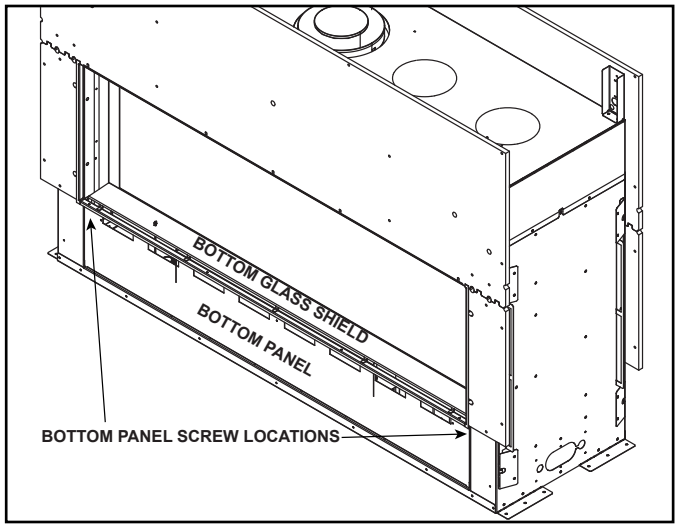

Figure 9.2 Bottom Glass Shield and Bottom Panel Location

If the finishing materials have been installed around the appliance opening, proceed as follows:

1. Remove bottom glass shield.
2. Remove screws on left and right sides of component heat shield and lift it out of the control cavity.

CAUTION! Risk of Overheating! *Component heat shield MUST be installed before operating appliance. Electrical components will be damaged.*

3. Unplug the 6V transformer from the junction box. This will turn the power off to the appliance.

4. Turn the gas shutoff handle to the “OFF” position to shut off the gas supply.

If additional access is needed, proceed as follows:

5. Remove glass assembly from appliance by unlatching the top spring latches from the glass frame and lifting glass frame assembly out of the bottom bracket.

6. Remove interior media and refractory from the appliance if already installed.

7. Remove the media tray. It is attached to the interior firebox bottom with ten screws. See Figure 9.3.

8. Remove the two screws that attach the pilot to the burner.

9. Remove the four screws securing the burner to the firebox sides and disengage burner from orifice. Remove burner. See Figure 9.3.

10. Remove the eight screws that secure the glass window. Remove the glass window. Handle with care. See Figure 9.4.

11. Remove light tray from appliance by lifting up and out through the bottom glass opening.

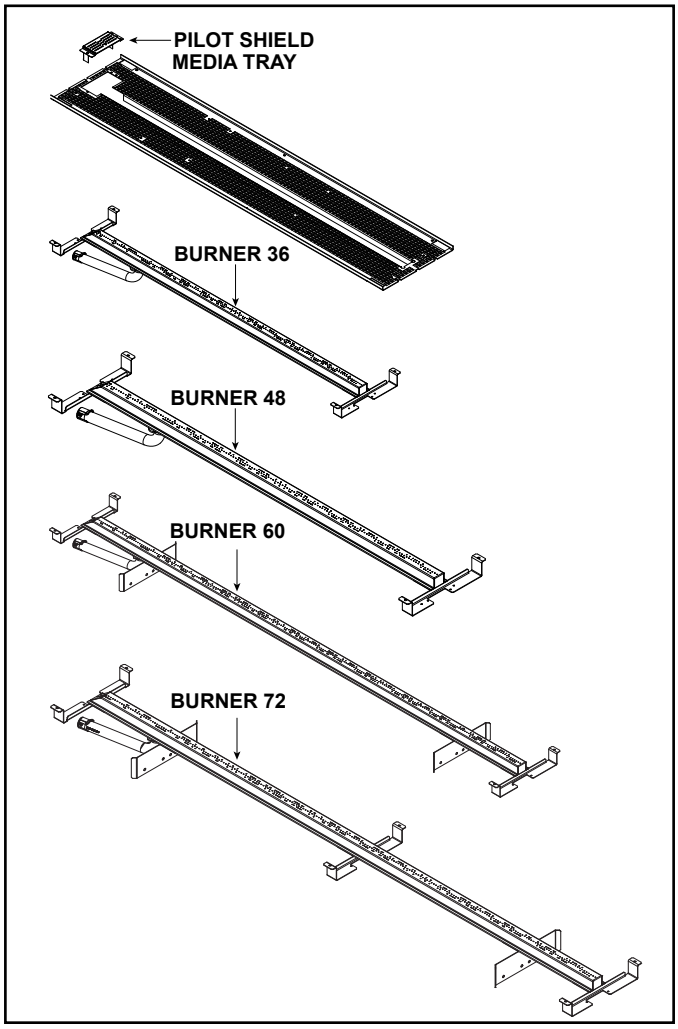

Figure 9.3 Media Tray with Burner and Pilot Shield

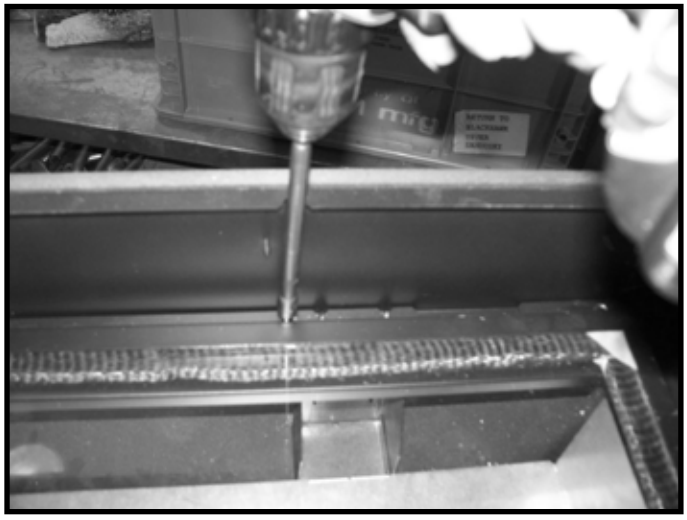

Figure 9.4 Gas and Electrical Access - Remove Glass Window

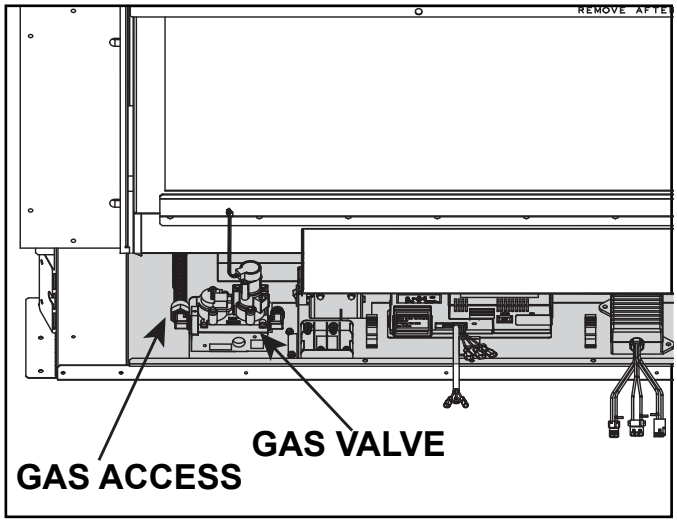

Figure 9.5 Gas Fitting Access with Bottom Glass Shield Removed

D. Gas Connection

- Refer to Section 3 for location of gas line access in appliance.
- Gas line may be run through the left side of appliance.
- The gap between supply piping and gas access hole may be sealed with caulk or aluminum foil tape with a minimum of 300 ºF continuous exposure rating or stuffed with non-combustible, unfaced insulation to prevent cold air infiltration.
- Ensure that gas line does not come in contact with outer wrap of the appliance. Follow local codes.
- Pipe incoming gas line into valve compartment.
- Connect incoming gas line to the 1/2 in. (13 mm) NPT connection on manual shutoff valve.

WARNING! Risk of Fire or Explosion! *Support control when attaching pipe to prevent bending gas line.*

WARNING! Risk of Fire or Explosion! *Gas build-up during line purge could ignite.*

- A small amount of air will be in the gas supply lines.
- *Ensure adequate ventilation.*
- *Ensure there are no ignition sources such as sparks or open flames.*

Light the appliance. It will take a short time for air to purge from lines. When purging is complete the appliance will light and operate normally.

WARNING! Risk of Fire, Explosion or Asphyxiation! *Check all fittings and connections with a non-corrosive commercially available leak-check solution.* ***DO NOT*** *use open flame. Fittings and connections could have loosened during shipping and handling.*

E. High Altitude Installations

NOTICE: *If the heating value of the gas has been reduced, these rules do not apply. Check with your local gas utility or authorities having jurisdiction.*

When installing above 2000 feet elevation:

- In the USA: Reduce input rate 4% for each 1000 feet above 2000 feet.
- In CANADA: Input ratings are certified without a reduction of input rate for elevations up to 4500 feet (1370 m)above sea level. Please consult provincial and/or local authorities having jurisdiction for installations at elevations above 4500 feet (1370 m).

Check with your local gas utility to determine proper orifice size.

F. Air Shutter Setting

WARNING! *Risk of Explosion or Delayed Ignition! Improperly adjusted air shutter could cause soot buildup.*

NOTICE: *If sooting occurs, provide more air by opening the air shutter.*

Air shutter settings may be adjusted by a qualified installer at the time of installation. The air shutter is set at the factory for minimum vertical vent run. Adjust air shutter for longer vertical runs. See Figure 9.6.

Air shutter settings should be adjusted by a qualified service technician at the time of installation. The air shutter is set at the factory for a typical horizontal termination through a 2 X 6 wall. See Figure 4.11 Top Vent - Horizontal Termination With One Elbow.

- Refer to Gas Service Access instructions in Section 9.C to access the air shutter.
- Loosen the 1/4 in. screw.
- Twist shutter to adjust.
- Shutter may be open for longer horizontal vent runs.
- Do not close the air shutter more than 1/16 in. for NG or 1/4 in. for propane.
- Tighten the screw.

Shutter Setting Verification / Flame Appearance

- After 15 minutes, the flames will be a yellow/blue mix. The front flames may be blue at this time.
- After 30 minutes, the flames should be yellow with some blue flames near the burner ports.
- After 1 hour, the flame will be at its maximum maturity.

NOTICE: *Flames should not appear orange or stretch to the top of the firebox. If flames are dark orange with dark, smoky tips, provide more primary air to the burner by opening the air shutter accordingly.*

Air Shutter Settings

ECHEL36IN-C ECHEL36STIN-C ECHEL48IN-C ECHEL48STIN-C	NG	Propane
NO REFRACTORY OR GLASS REFRACTORY KIT	Standard Opening= 3/16 in.	Standard Opening= Full Open
LOG KIT	1/4 in.	Full Open

ECHEL60IN-C	NG	Propane
NO REFRACTORY OR GLASS REFRACTORY KIT	Standard Opening= Full Open	Standard Opening= Full Open
LOG KIT	Full Open	Full Open

ECHEL72IN-C	NG	Propane
NO REFRACTORY OR GLASS REFRACTORY KIT	Standard Opening= Full Open	Standard Opening= Full Open
LOG KIT	Full Open	Full Open

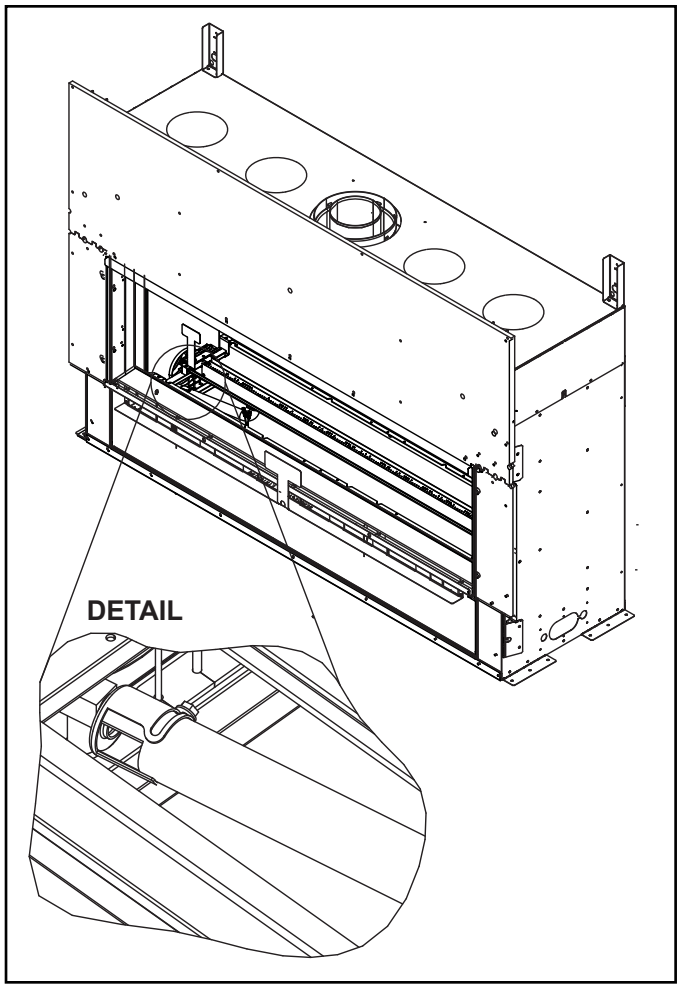

Figure 9.6 Air Shutter Location

10 Finishing

A. Facing Material

⚠ WARNING

Risk of Fire!

DO NOT apply combustible materials beyond the minimum clearances. Comply with all minimum clearances to combustibles as specified in this manual. Materials overlapping into non-combustible zones could ignite and will interfere with air flow through decorative barrier fronts.

- Metal front of appliance may be covered with non-combustible materials only.
- Facing and/or finishing materials must not interfere with air flow through decorative barrier fronts, removal of decorative barrier fronts or access for service.
- Facing and/or finishing materials must never overhang into the glass opening.
- Observe all clearances when applying combustible materials.
- Seal gaps between the finished wall and appliance top and sides using a 300 ºF minimum sealant. Refer to Figure 10.1.

NOTICE: *Surface temperatures around the appliance will become warm while the appliance is in operation. Ensure materials used for all surfaces (floor, walls, mantels, etc.) will withstand temperatures up to 190°F.*

Materials with higher temperature ratings may be required in areas around the fireplace opening. Comply with all specifications in this manual.

If using vinyl flooring, refer to Section 3.E.

WARNING! Risk of Fire! *Comply with all minimum clearances to combustibles as specified. Framing closer than the minimums listed must be constructed entirely of noncombustible materials (i.e., steel studs, concrete board, etc.).*

Splatter Guard

The splatter guard is a piece of corrugated material used to protect the appliance during the installation process before finishing work on the whole hearth is complete. A splatter guard is factory-installed on ECHELON-C models. Splatter guards must be removed before appliance is fired.

WARNING! Risk of Fire! *Remove the splatter guard before lighting the appliance. Shut off gas to the appliance when the splatter guard is in place to prevent accidental operation.*

Finishing Instructions

It is important to follow the framing and finishing instructions to ensure proper placement of fireplace into the surrounding framing/finishing materials.

Wall sheathing materials 1/2 in. thick are specified in this installation manual to properly align with the factory-included non-combustible material.

WARNING! Risk of Fire! *Factory-included non-combustible board MUST be installed. DO NOT remove or cover it with combustible material, such as:*

- *Drywall (gypsum board)*
- *Plywood*
- *Materials that do not meet the ASTM E 136 Non-combustibility standard (below).*

Removal of installed, non-combustible board and/or use of materials not meeting the ASTM E 136 standard could cause fire.

Non-Combustible Materials Specification

Material which will not ignite and burn. Such materials are those consisting entirely of steel, iron, brick, tile, concrete, slate, glass or plasters, or any combination thereof.

Materials that are reported as passing **ASTM E 136, Standard Test Method for Behavior of Materials in a Vertical Tube Furnace at 750 ºC.**

WARNING! Risk of Fire! *Maintain specified air space clearances to combustibles. Inadequate air space could cause overheating and fire.*

Finishing Materials

NOTICE: *The maximum finishing material not only includes the decorative finish materials (marble, tile, slate, etc) but also the thin set, lath, and adhesive used to attach the decorative finish material.*

NOTICE: *Hearth & Home Technologies recommends using multiple pieces of decorative finish material around the opening of the appliance to reduce the chances of the material cracking. A single piece of decorative finish material (such as marble or granite) is more susceptible to cracking due to uneven heating and cooling which causes temperature differentials within the material itself. The use of multiple pieces will reduce the temperature differentials in each piece and reduce the likelihood of cracks. In addition to using multiple pieces of decorative finish material, the installation of the Passive Heat optional heat management system will also reduce the chances of cracking.*

B. Drywall Installation

Introduction

If the desired finished fireplace installation does not utilize non-combustible finishing materials (such as tile, marble, stone, etc.), special attention must be paid to the installation of drywall/gypsum wallboard to the side joints of the non-combustible board to minimize potential development of cracking and paint discoloration. Hearth and Home Technologies has tested the following methods and materials and therefore recommends the following steps for the best drywall performance.

Attaching Non-Combustible Board

When finishing the wall around the fireplace, it is critical that wall sheathing be fastened properly. Wall sheathing fasteners, such as screws or nails, are not permitted in some locations. See Figure 10.1.

It is acceptable to pre-drill holes and use self-tapped screws in the factory-included non-combustible board which may be used to lathe (a backer for tile, marble, etc.). Screws being installed through the installed non-combustible board should be self-tapping type with a maximum length of 2 inches. See Figure 10.1.

When installing finish material on the lower cover panel, DO NOT drill or install screws longer than 3/4 of an inch. Screws longer than 3/4 of an inch could penetrate the lower cover panel causing damage to components or penetrate the gas line. See Figure 10.1.

***WARNING! Risk of Fire! DO NOT** use screws longer than two inches when attaching finishing materials to installed non-combustible material. Screws longer than two inches will compromise clearance and could cause overheating and fire.*

***WARNING! Risk of Fire, Explosion or Asphyxiation! DO NOT** use screws more than 3/4 of an inch long on lower cover panel. Longer screws may penetrate gas line or damage valve or electrical components.*

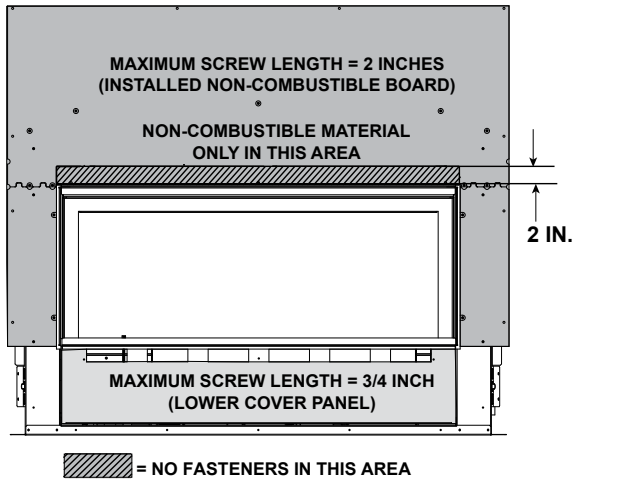

Note: It is acceptable to use a high temperature silicone sealant to adhere drywall to lower cover panel.

Figure 10.1 Screw Length Requirements

The appliance is designed to mate with 1/2 in. wall sheathing materials such as drywall, plywood, wood composites, or non-combustible materials.

To ensure good adhesion of drywall compounds and tape, thoroughly clean the non-combustible board and surrounding drywall to remove dust. The non-combustible board may be primed with a high-quality PVA primer.

Filling and Finishing Seams

1. **Step 1:** Fill all gaps and joints between the non-combustible board pieces and the drywall with a general purpose chemically setting joint compound such as Durabond® 45 Joint Compound manufactured by USG (Sheetrock® brand), recommended by Hearth & Home Technologies. Use a drywall knife to firmly press the joint compound into all gaps. See Figure 10.1. Allow these joints to dry.
2. **Step 2:** All joints are to be taped with fiberglass mesh tape 1 7/8" minimum width, and embedded with Setting-Type joint compound, such as with Durabond® Joint Compound manufactured by USG (Sheetrock® brand), or equivalent. Allow these joints to dry.
3. **Step 3:** Depending on the technique used in steps 1 and 2, two to three finishing coats are required to provide a smooth and durable finish. Hearth and Home Technologies recommends a lightweight or all-purpose compound. Allow each coat to properly cure. Allow the finishing coat(s) to cure for 24 hours before operating appliance.

***WARNING! Risk of Fire! DO NOT** apply combustible materials beyond the minimum clearances. Comply with all minimum clearances to combustibles as specified in this manual. Materials overlapping into non-combustible zones could ignite and will interfere with air flow through decorative barrier fronts.*

***WARNING! Risk of Fire! DO NOT** install drywall or other combustible materials directly onto the installed non-combustible board. Overlapping materials could ignite.*

Painting

If desired finishing includes a painted wall, a high-quality 100% acrylic latex paint with a high-quality latex primer base coat are recommended around the appliance to limit discoloration. Oil-based or standard acrylic paints may be more prone to discoloration due to heat exposure.

Drywall Joint-Crack Prevention and Repair

Drywall joints around the fireplace will be affected by exposure to elevated temperatures, along with other environmental, structural factors due to new construction, and methods used to install and finish the drywall. If a crack does emerge adjacent to the fireplace, it can be permanently repaired by filling it with a paintable latex caulk, followed by repainting.

Some movement of the screws used to secure the non-combustible board to the appliance/surround framing is expected. If a blemish begins to show over a screw head, sand the surface to remove the blemish and repaint.

WARNING! Risk of Fire! *Maintain specified air space clearances to combustibles. Inadequate air space could cause overheating and fire.*

WARNING! Risk of Fire! **Maintain specified air space clearances to combustibles.** *Failure to comply with these instructions may cause a fire or cause the appliance to overheat.*

NOTICE: *The location of the Passive Heat discharge opening could allow for venting and other construction materials to be visible. It is acceptable to paint the vent pipe and other construction materials using a high temperature paint with a minimum of 300 °F continuous exposure rating. Hearth & Home Technologies recommends using black touch up paint (part number TUP-GBK-12) available from your Hearth & Home Technologies dealer.*

Facing Material

- Facing and/or finishing materials must not interfere with air flow through decorative barrier fronts.
- Facing and/or finishing materials must never overhang into the glass opening.
- Observe all clearances when applying combustible materials.

Finishing - Hearth

See Inside Fit or Overlap Method sections to determine the necessary requirements for installation of a non-combustible hearth for this model. Only hearths made of non-combustible materials are allowed.

Decorative facing material thickness is measured from the face of the installed non-combustible board. See Figure 10.2 and Figure 10.3.

The fronts for this appliance are compatible with non-combustible materials. See Figure 10.2 and Figure 10.3.

Refer to Section 1.E and 1.F of this manual for definitions and qualifications of non-combustible and combustible materials.

Specific requirements for each method of installation are described in this section.

Installation of finishing materials can be accomplished by either the “overlap” or “inside-fit” method, depending on what type of decorative barrier front is to be installed. See Figure 10.2 and 10.3. Overlap fit decorative barrier fronts include the Quattro and Loft Forge. The Clean Face Trim Front (CFT) can be either an inside fit or an overlap fit. See Table 1.

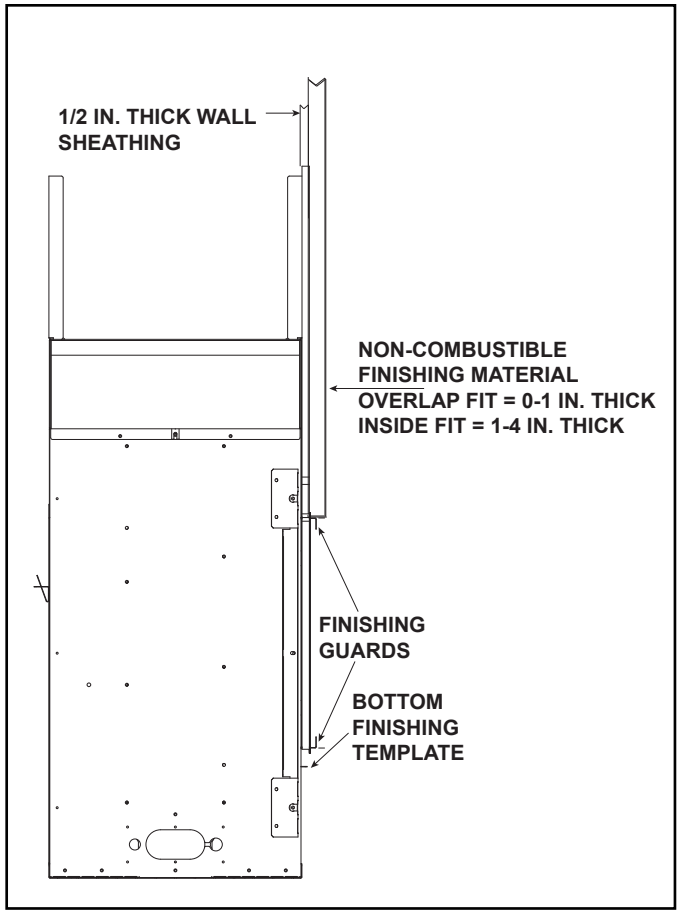

Figure 10.2 Finishing and Facing Materials - Single-Sided Models

Decorative Barrier Front	Finishing Method	Material Thickness	Trim Ring
Clean Face Trim (CFT)	Inside Fit	1-4 inches	Included & Not Used (Option #1)
			Included & Used (Option #2)
	Overlap Fit	0-1 inch	Included & Used
Picture Frame Front (PFF)	Overlap Fit	0-1 inch	Not included
Picture Frame Front (PFF)	Inside Fit	1-4 inches	Not included

Table 1

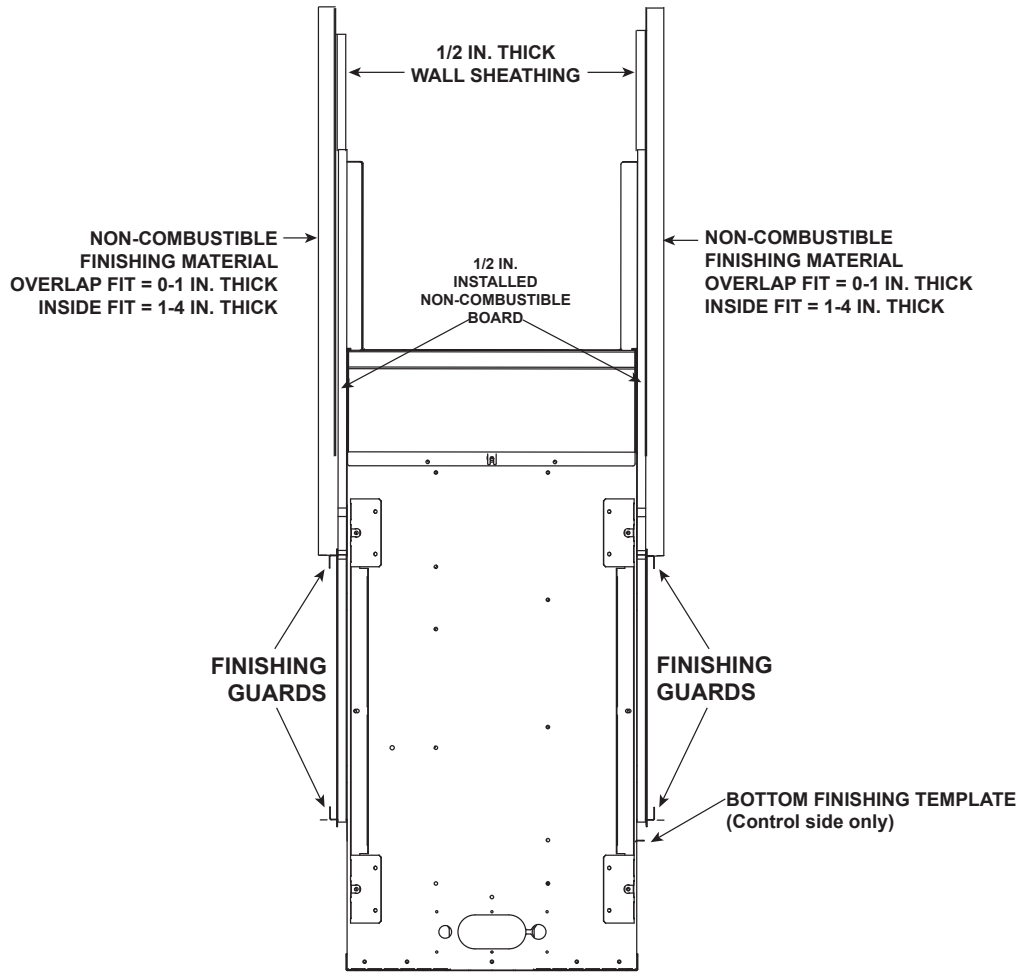

Figure 10.3 Finishing Materials - See-Through Models

C. Decorative Barrier Fronts

WARNING! Risk of Burns! *A decorative barrier front is required for this model.* ***DO NOT*** *operate this appliance without a decorative barrier front in place.*

Only decorative barrier fronts certified for use with this appliance model may be used. Contact your dealer for a list of decorative barrier fronts that may be used.

> **Note:** See appliance Owner's Manual for TV mounting guidelines.

The decorative barrier fronts approved for use with this appliance have been designed to be installed by two methods: Overlap Fit or Inside Fit. Before beginning the installation, it is important to determine which method will be used.

Clean Face Trim Front (CFT)

Overlap Fit (0-1 Inch Thick Finishing Method)

Non-Combustible Finish Materials

WARNING! Risk of Fire! DO NOT *apply combustible materials beyond the minimum clearances. Comply with all minimum clearances to combustibles as specified in this manual. Overlapping materials could ignite.*

Note: When a Clean Face Trim decorative barrier front is installed, the rectangular holes in bottom access panel will be covered.

NOTICE: *This one inch maximum not only includes the decorative finish materials (marble, tile, slate, etc) but also the thin set, lath and adhesive used to attach the decorative finish material.*

1. Remove bottom finishing template from bottom access panel. Verify that factory-installed finishing guards are installed to ensure finishing material does not extend into the fireplace opening. See Figure 10.2 and 10.3.
2. The non-combustible finish material, 0-1 inch thick, should be installed up to the fireplace opening on all four sides, including the bottom access panel, covering the eight rectangular holes. Refer to Figure 10.4 for minimum finished opening dimensions.

WARNING! Risk of Fire! DO NOT *apply finishing material beyond the finishing guard. Appliance will overheat if finishing material extends into appliance opening.*

NOTICE: *Decorative barrier front will not fit properly if finishing material is applied beyond the finishing guard.*

4. Follow Overlap Fit section of the instructions provided with decorative barrier front.

Decorative Barrier Front	Finishing Method	Material Thickness	Trim Ring
Clean Face Trim (CFT)	Overlap Fit	0-1 inch	Included & Used

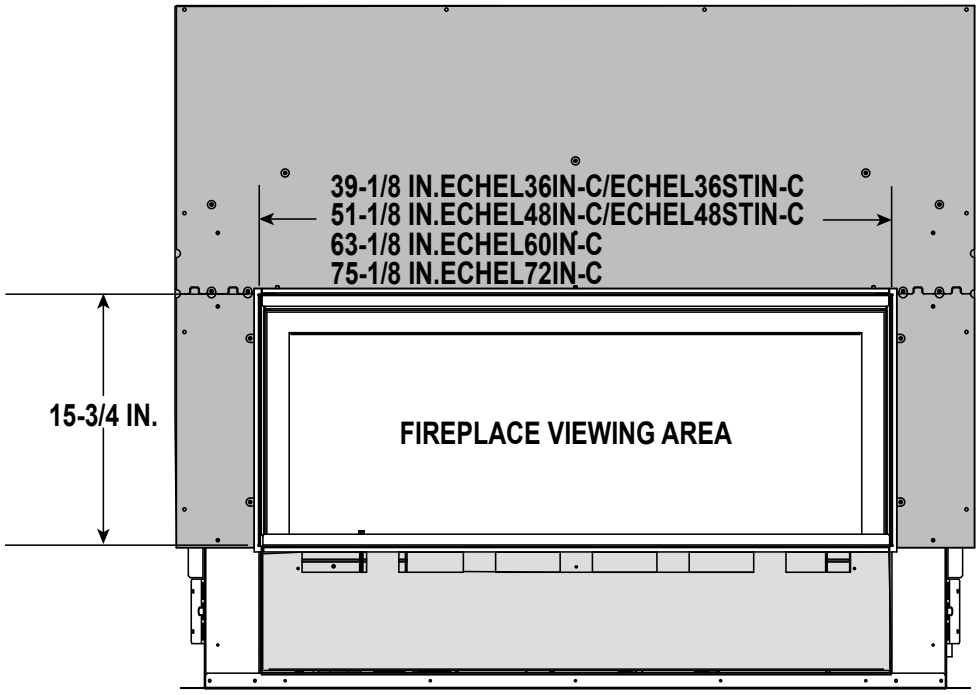

Figure 10.4 Minimum Finished Opening Dimensions - Clean Face Trim Front Method

Clean Face Trim Front (CFT)

Inside Fit (1-4 Inches Thick Finishing Method)

Non-Combustible Finish Materials

***WARNING! Risk of Fire! DO NOT** apply combustible materials beyond the minimum clearances. Comply with all minimum clearances to combustibles as specified in this manual. Overlapping materials could ignite.*

Note: When a Clean Face Trim decorative barrier front is installed, the rectangular holes in bottom access panel will be covered.

***NOTICE:** This four inch maximum not only includes the decorative finish materials (marble, tile, slate, etc) but also the thin set, lath and adhesive used to attach the decorative finish material.*

There are two options for this method of finishing:

CFT Finishing Method	Trim Ring
Inside Fit	Included & Not Used (Option #1)
	Included & Used (Option #2)

Without Decorative Trim Ring: (Option #1)

Note: You will not use the trim ring, which is shipped with the CFT front, for this application.

1. Remove bottom finishing template from bottom access panel. Verify that factory-installed finishing guards are installed to ensure finishing material does not extend into the fireplace opening. See Figures 10.2 and 10.3.
2. The non-combustible finish material, 1-4 inches thick, should be installed up to the fireplace opening on all four sides, including the bottom access panel, covering the eight rectangular holes. Refer to Figure 10.4.

***WARNING! Risk of Fire! DO NOT** apply finishing material beyond the finishing guard. Appliance will overheat if finishing material extends into appliance opening.*

***NOTICE:** Decorative barrier front will not fit properly if finishing material is applied beyond the finishing guard.*

3. Follow Inside Fit section of the instructions provided with decorative barrier front.

With Decorative Trim Ring: (Option #2)

The trim ring, which is included with the CFT front, will be installed and used as a finishing template. It will be left exposed.

1. Remove finishing template from bottom access panel.
2. Remove top and bottom finishing guards.
3. Install trim ring (included with CFT decorative barrier front). Push trim ring completely into the opening.
4. Place trim ring into position and install the four shoulder bolts through the trim ring as shown in Figure 10.6. Install the screw as shown in Figure 10.5.

Finishing materials may be installed up to the trim ring but must not extend beyond it. See Figure 10.7.

***NOTICE:** It is recommended that high temperature silicone sealant (500º F minimum continuous exposure rating) be used to adhere the trim ring to the finishing material.*

***WARNING! Risk of Fire! DO NOT** apply finishing material beyond the trim ring. Appliance will overheat if finishing material extends into appliance opening.*

Figure 10.5 Install Trim Ring

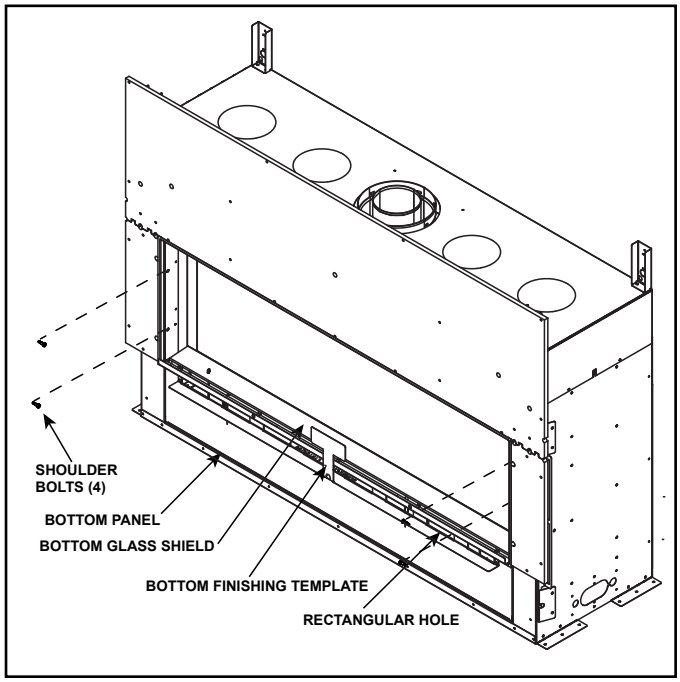

Figure 10.6 Install Shoulder Bolts

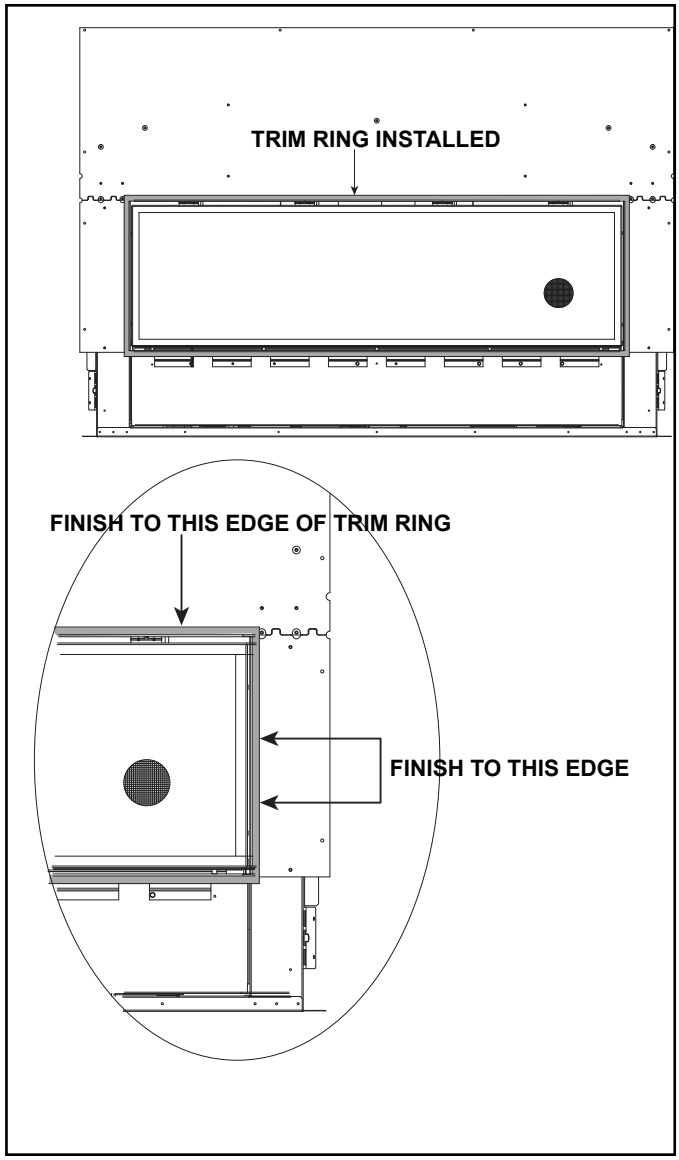

Figure 10.7 Non-Combustible Finish Material Diagram for 1-4 Inch Thick Inside Fit Method Using Trim Ring (Option #2)

Finishing - Raised Hearth in Front of Appliance

A non-combustible hearth may be installed in front of the appliance only if the inside fit finishing method with CFT doors is used.

1. Non-combustible hearth material may be placed up to the bottom edge of the trim ring. The hearth may be a maximum of twelve inches in depth.

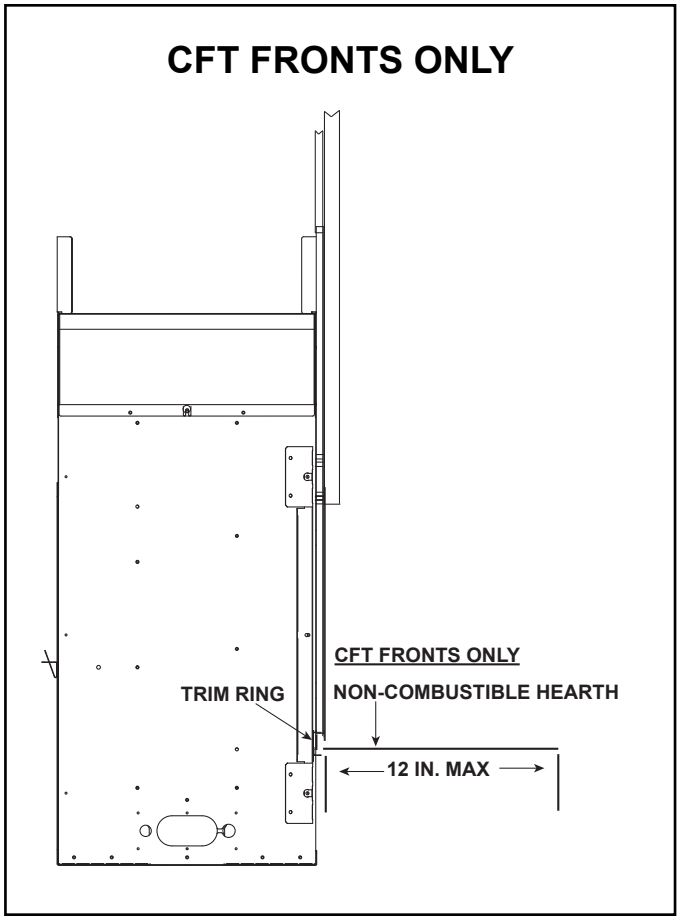

Figure 10.8 Finishing and Facing Materials - Inside Fit CFT Decorative Barrier Front Only

Picture Frame Front (PFF)

Overlap Fit (0-1 Inch Thick Finishing Material Only)

Non-Combustible Finish Materials

Decorative Front	Finishing Method	Material Thickness	Trim Ring
Picture Frame Front (PFF)	Overlap Fit	0-1 inch	Not included
Picture Frame Front (PFF)	Inside Fit	0-4	Not included

WARNING! Risk of Fire! DO NOT *apply combustible materials beyond the minimum clearances. Comply with all minimum clearances to combustibles as specified in this manual. Overlapping materials could ignite.*

NOTICE: *If one inch maximum finishing material thickness is exceeded, the decorative barrier front will not fit. This one inch maximum not only includes the decorative finish materials (marble, tile, slate, etc) but also the thin set, lath and adhesive used to attach the decorative finish material.*

0-1 Inch Thickness Overlap Fit Method

The non-combustible finishing material, 0-1 inch thick, should be installed up to the fireplace opening on the top bottom and sides.

Use the factory-installed top finishing guard to ensure the finishing material does not extend into the fireplace opening.

See Figure 10.9 for minimum finished opening dimensions.

WARNING! Risk of Fire! DO NOT *apply finishing material beyond the top finishing guard and the bottom finishing template. Appliance will overheat if finishing material extends into appliance opening.*

1. Follow instructions provided with decorative front for installation.

NOTICE: *Decorative front will not fit properly if finishing material is applied beyond the finishing guard.*

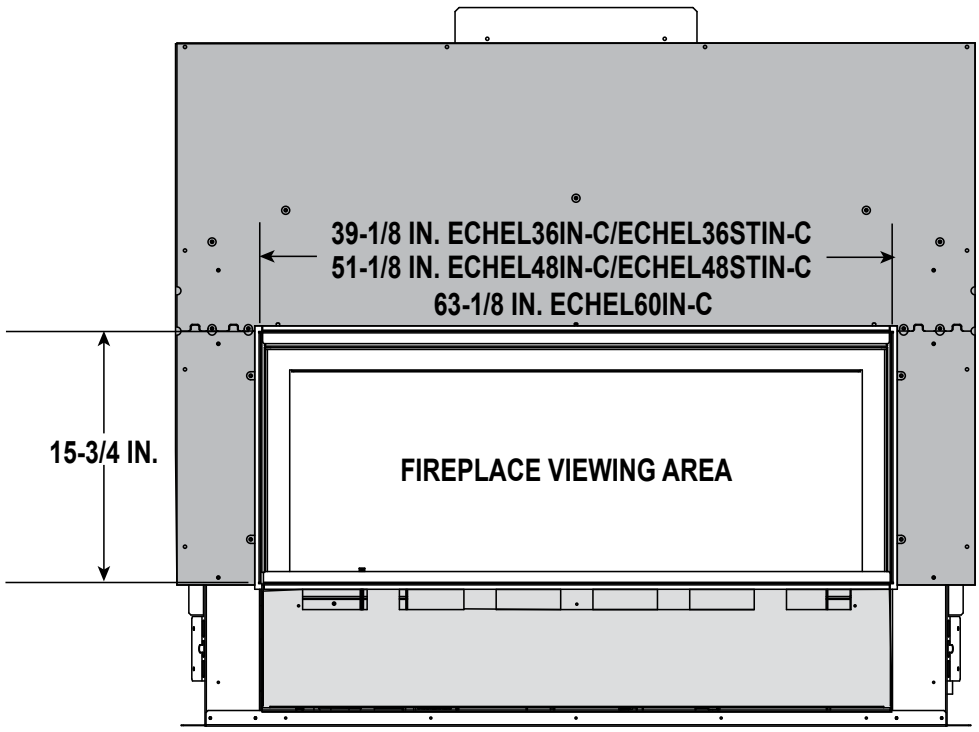

Figure 10.9 Non-Combustible Finish Material Diagram for 0-1 Inch Thick Overlap Fit Method (Picture Frame Front)

0-4 Inch Thickness-Inside Fit Method

0-4 Inches Finishing (Inside Fit):

See Figure 10.10 the required measurements to ensure the proper fit of the PFF. The top and bottom will have a 1/2 inch space from the PFF to the finished wall above and below it. This is required to prevent the appliance from overheating.

***WARNING! Risk of Fire! DO NOT** apply combustible materials beyond the minimum clearances. Comply with all minimum clearances to combustibles as specified in this manual. Overlapping materials could ignite.*

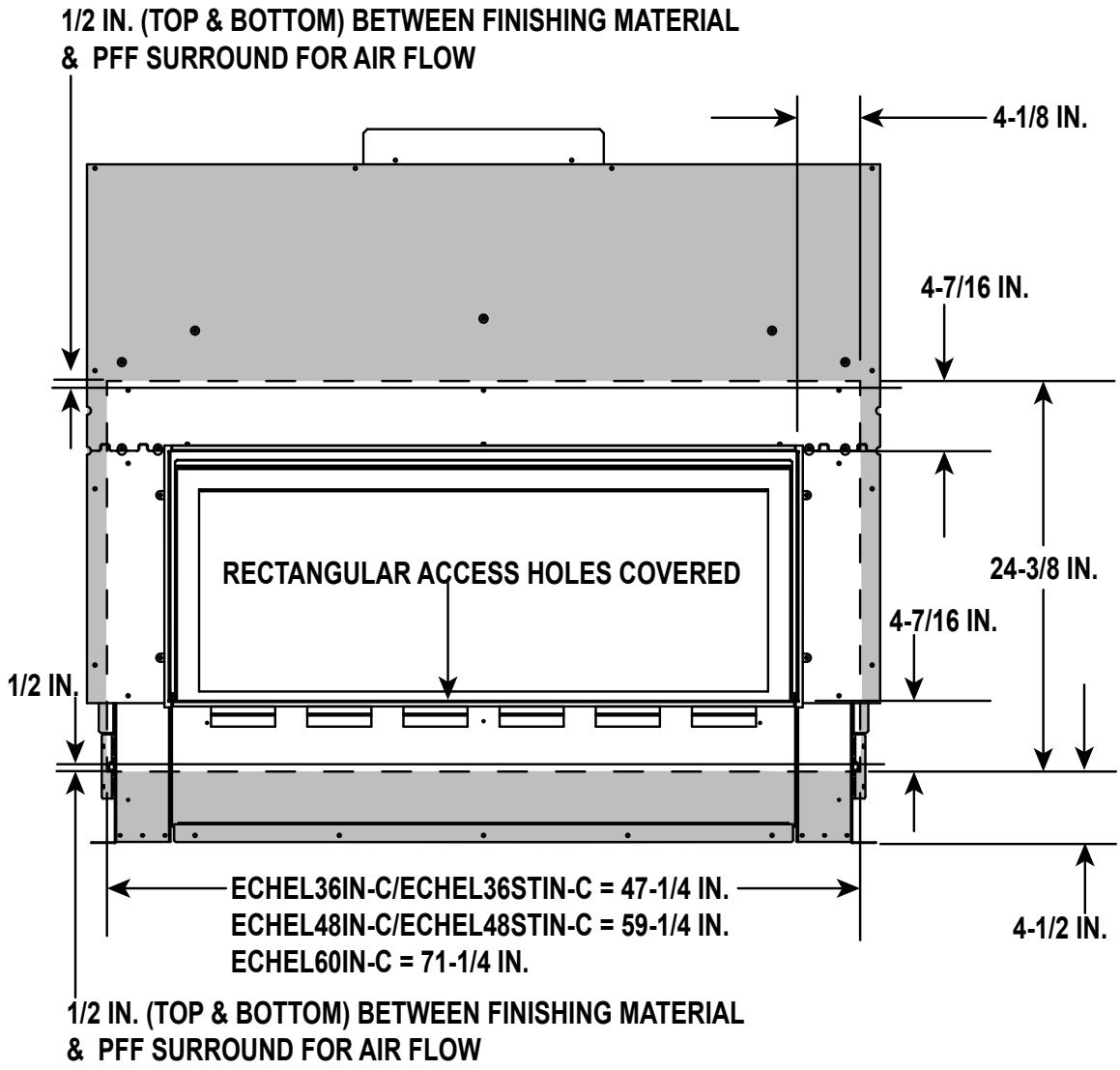

Figure 10.10 Minimum Finished Opening Dimensions - Picture Frame Front - Inside Fit 0-4 Inch

D. Mantel and Wall Projections

WARNING! Risk of Fire! *Comply with all minimum clearances to combustibles as specified. Framing closer than the minimums listed must be constructed entirely of noncombustible materials (i.e., steel studs, concrete board, etc.)*

If the Passive Heat kit will be installed, see Figure 10.18 for details regarding clearances to combustibles in addition to the requirements for Combustible and Non-Combustible Mantel diagrams and the Mantel Leg/Wall Projection diagrams (Figure 10.11-Figure 10.17).

Note: For non-combustible fireplace finish material (marble, stone, etc) specifications refer to Section 10.A.

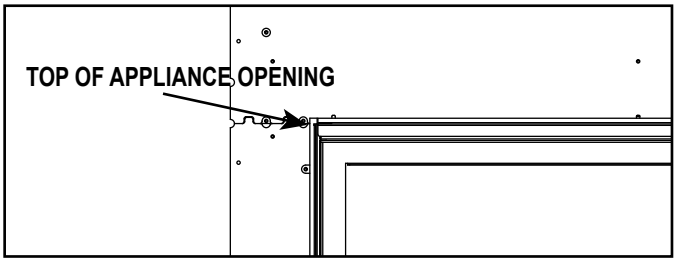

Figure 10.11 Location of Appliance Opening

Note: Minimum distance from top edge opening to ceiling can be found in the Framing and Clearances section 3.B.

Combustible Mantels

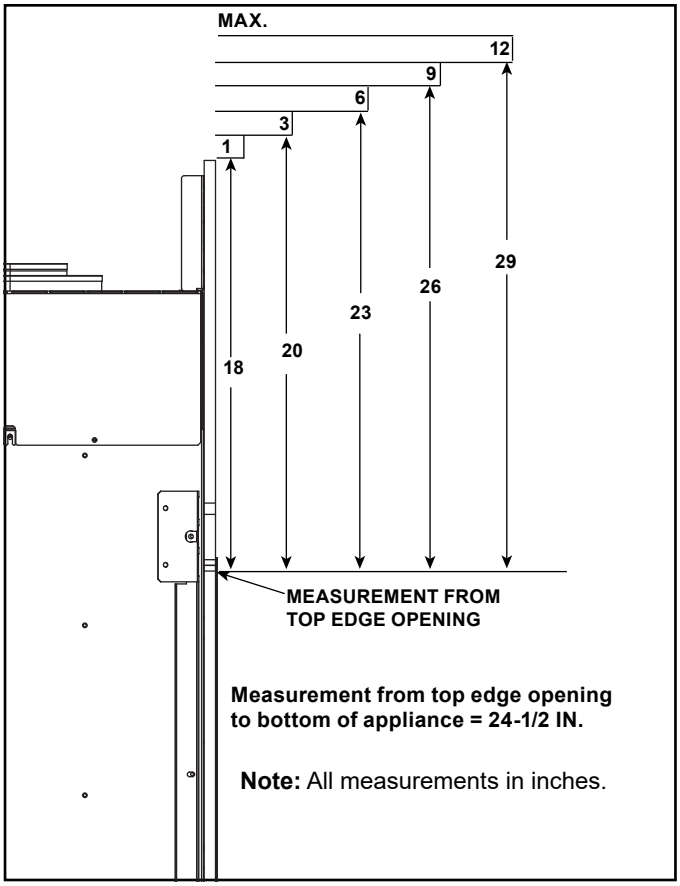

Figure 10.12 Minimum Vertical and Maximum Horizontal Dimensions of Combustibles - ECHEL36IN-C, ECHEL36STIN-C, ECHEL48IN-C and ECHEL48STIN-C

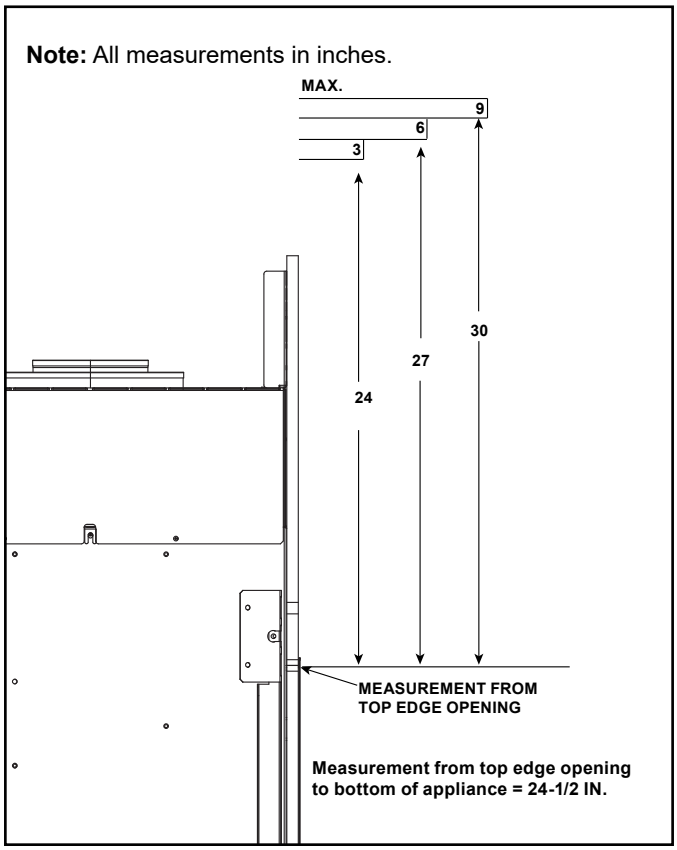

Figure 10.13 Minimum Vertical and Maximum Horizontal Dimensions of Combustibles - ECHEL60IN-C and ECHEL72IN-C

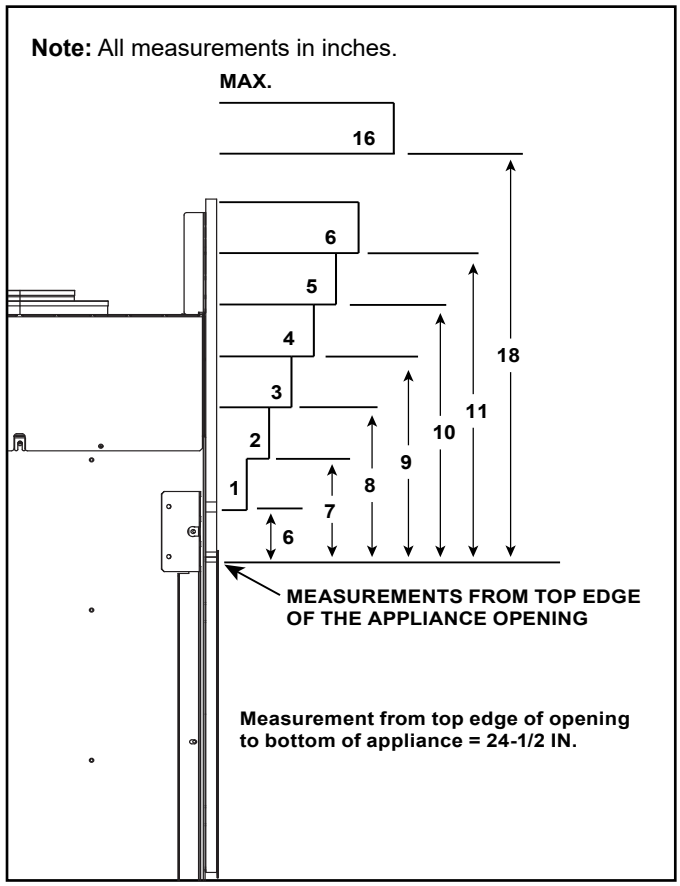

Figure 10.14 Minimum Vertical and Maximum Horizontal Dimensions of Combustibles - Passive Heat Kit Installed (All Sizes)

Non-Combustible Mantels

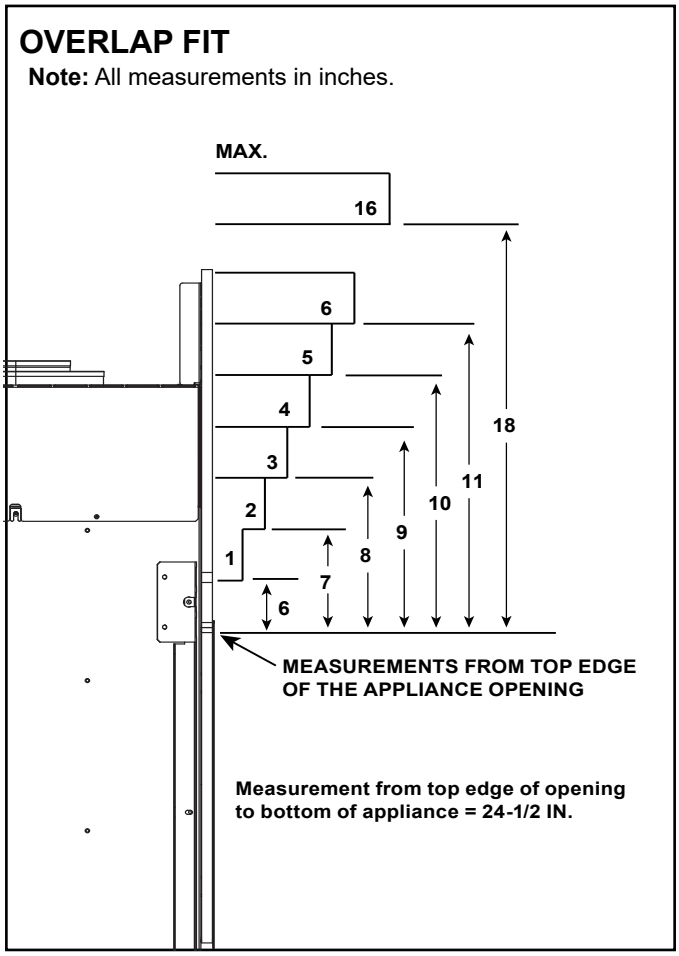

Figure 10.15 Minimum Vertical and Maximum Horizontal Dimensions of Non-Combustibles - Overlap Fit Finishing

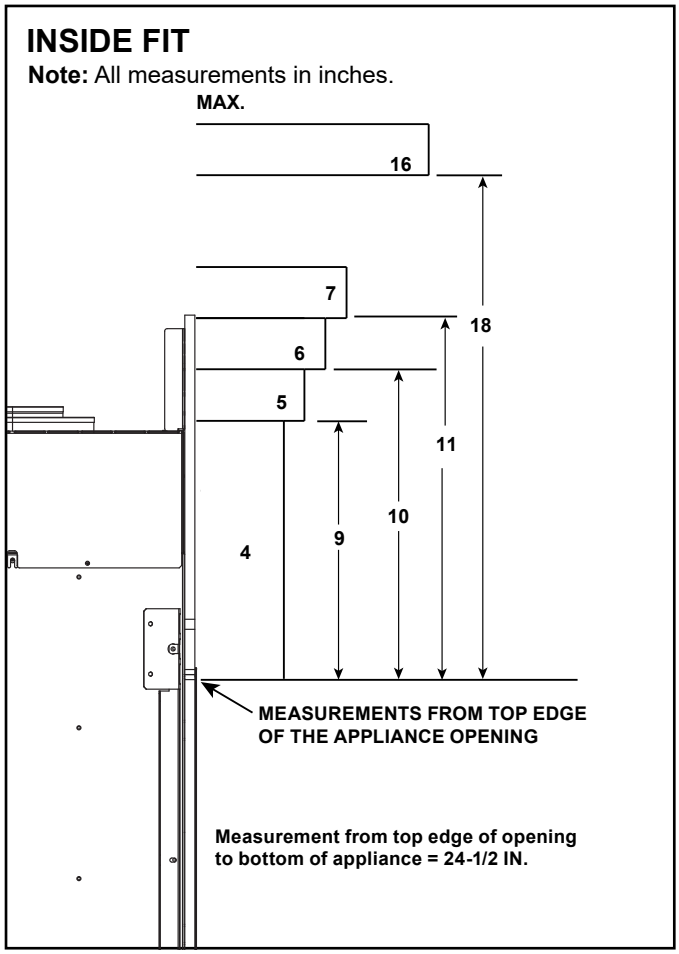

Figure 10.16 Minimum Vertical and Maximum Horizontal Dimensions of Non-Combustibles - Inside Fit Finishing

Mantel Legs Or Wall Projections Extending Past The Face Of The Fireplace (Combustible or Non-Combustible)

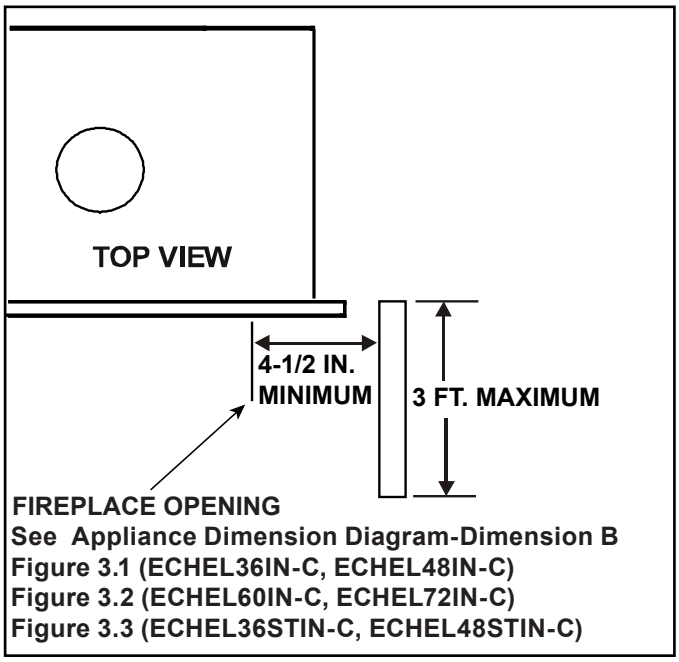

Figure 10.17 Mantel Leg or Wall Projections (Acceptable on both sides of opening)

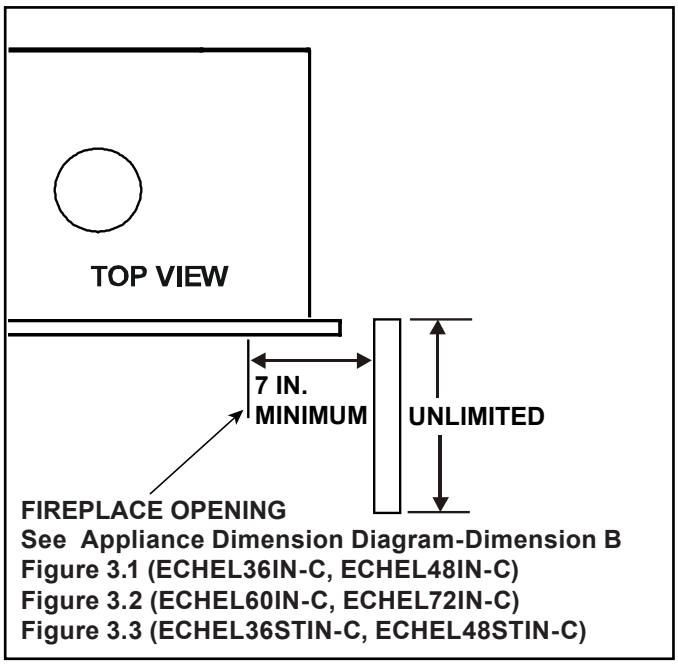

Figure 10.18 Mantel Leg or Wall Projections (Acceptable on both sides of opening)

Clearances with Passive Heat Optional Heat Management System

Figure 10.19 shows the required clearances for appliance, ceiling finishing material and framing members. Ensure all clearances are maintained.

Good Faith Guidelines for TV Installations
Above a ECHELON-C Fireplace with Passive Heat Option
(Single-Sided Appliance Shown)

WARNING! Risk of Fire! *Wire mesh required on bottom of discharge opening when discharge opening is greater than 3 inches. Secure wire mesh to top of framing.*

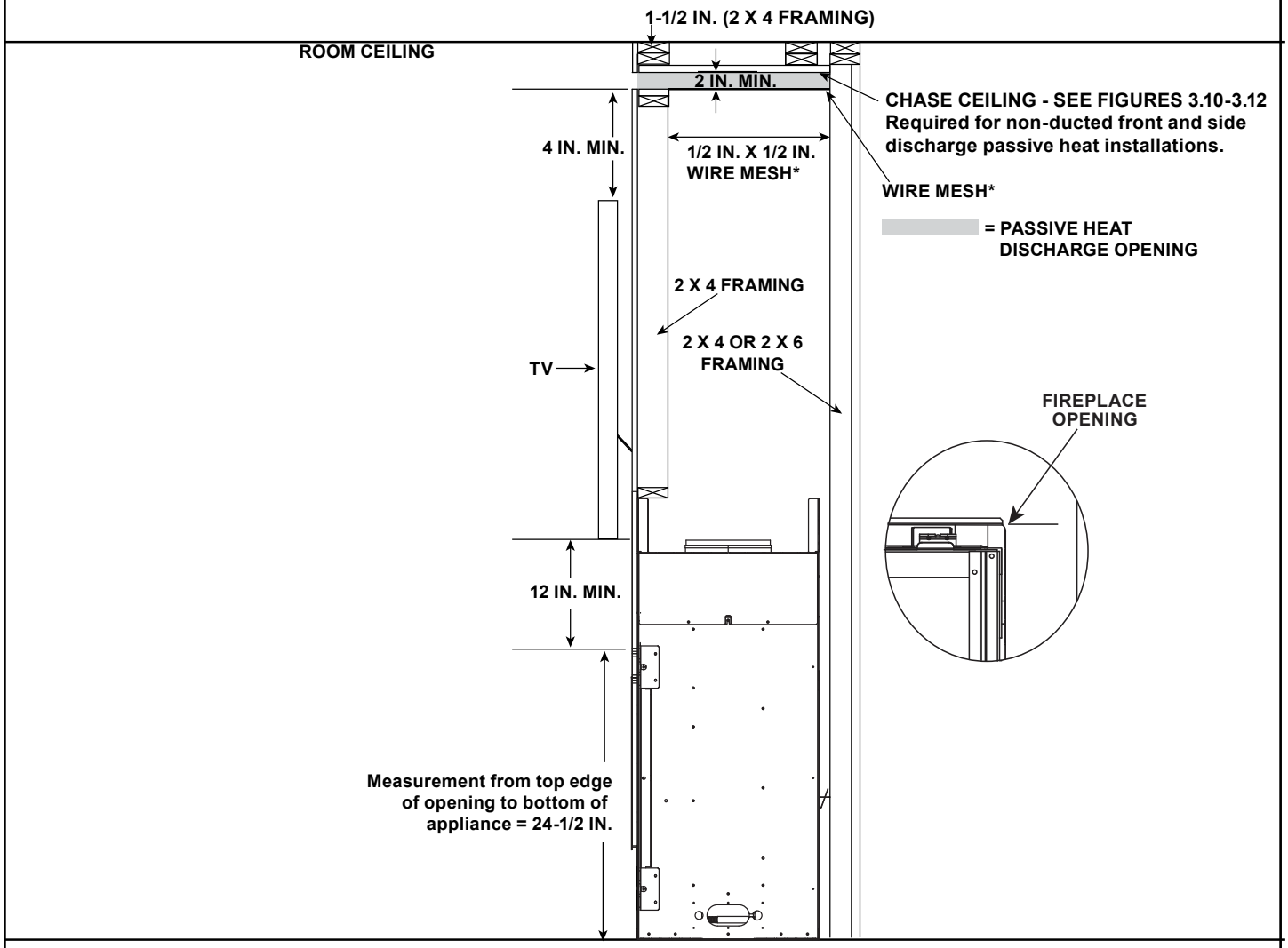

*** Wire mesh required for front discharge or open top discharge passive heat installations with discharge opening of 3 inches or greater.**

Figure 10.19 Clearances with Passive Heat Optional Heat Management System Installed

11 Appliance Setup

A. Fixed Glass Assembly Removal and Replacement

WARNING! Risk of Asphyxiation! *Handle fixed glass assembly with care. Inspect the gasket to ensure it is undamaged and inspect the glass for cracks, chips or scratches.*

- ***DO NOT*** *strike, slam or scratch glass.*
- ***DO NOT*** *operate fireplace with glass removed, cracked, broken or scratched.*
- *Replace as a complete assembly.*

Removing Fixed Glass Assembly

1. Remove the decorative barrier front from fireplace and set aside on work surface.
2. Remove bottom glass shield. See Figure 11.2.
3. Locate the glass latches that are on the upper edge of the glass frame of the appliance. See Figure 11.1.
4. Use both index fingers to release the glass clips.
5. Allow glass to tilt forward. Grasp glass on the upper return lip of glass frame and lift up and out. The glass should lift easily out of the bottom retaining lip.

Replacing Fixed Glass Assembly

1. Locate retaining lip on lower front face of firebox.
2. Place glass assembly into retaining lip end. Tilt top of glass assembly toward fireplace.
3. Assure proper left to right placement of glass and engage all four spring latches.
4. Replace bottom glass shield and decorative barrier front.

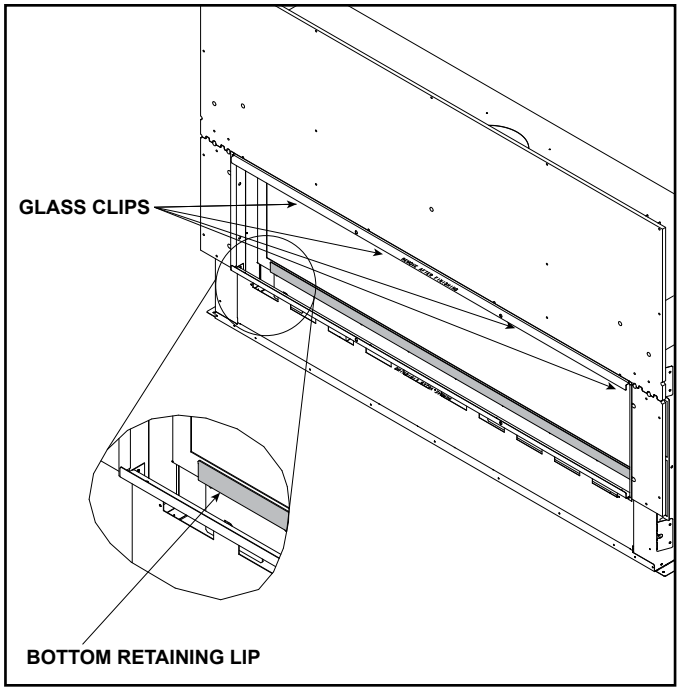

Figure 11.1 Fixed Glass Assembly

B. Remove the Shipping Materials/Install Bottom Glass Shield

Remove shipping materials from inside or underneath the firebox. Verify all components are with the fireplace. Unwrap the bottom glass shield and replace in the same location as shown in Figure 11.2.

Note: The return bend on the bottom glass shield will slide between the firebox glass and the firebox glass frame. Firm pressure may be required to engage the bottom glass shield into the firebox glass assembly.

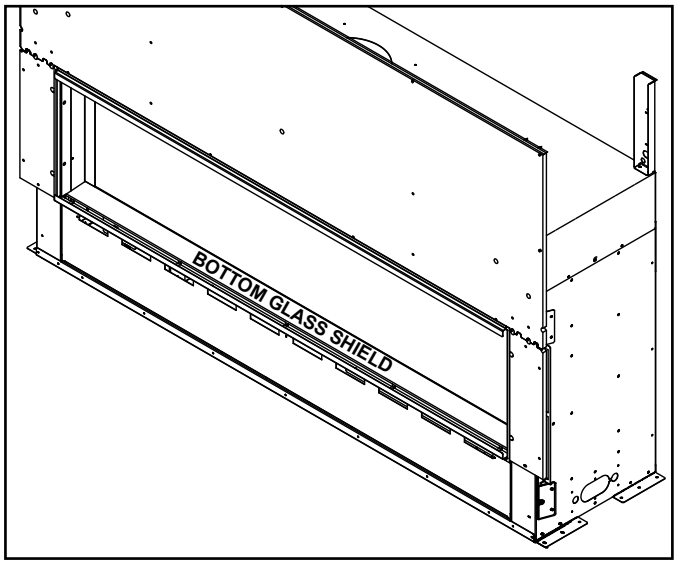

Figure 11.2 Bottom Glass Shield Location

CAUTION! Risk of Overheating! *DO NOT remove component insulation from top of component heat shield. Electrical components will be damaged.*

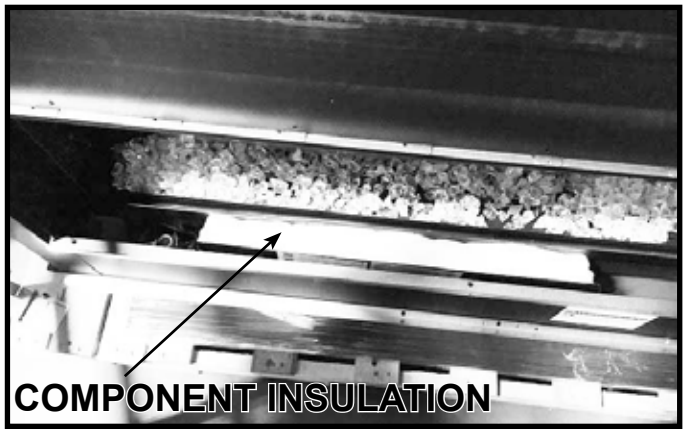

Figure 11.3 Component Insulation Location

C. Clean the Appliance

Clean/vacuum any sawdust that may have accumulated inside the firebox or underneath in the control cavity.

Optional Passive Heat Kit Installations Only:

WARNING! Risk of Fire! *Remove all debris and objects from firebox top and appliance top before operating the appliance.*

Inspect for and remove all debris that may have accumulated or objects that may have been placed on the firebox top and appliance top during the installation process. All debris and objects must be removed prior to operation of the appliance. Firebox top and appliance top are shown in Figure 11.4.

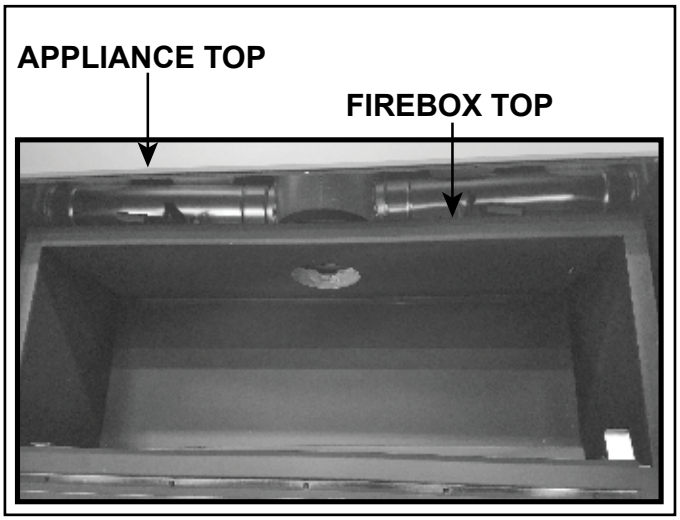

Figure 11.4

D. Install Glass Refractory (Optional)

An optional glass refractory kit is available for use with the ECHELON models. Install the kit per instructions included.

E. Install Log Set or Stones (Optional)

An optional log set and/or stones kit is available for use with the ECHELON models. Install the accessories per instructions included with kit.

F. Install Media (Included)

A media kit is included for use with the ECHELON models. Install glass media as instructed. Use the chart below to determine the amount of media to use for the model size being installed. Three additional color options are available for use with Echelon.

WARNING! Choking Hazard! *Keep media out of reach of children.*

MODEL	MEDIA-MAX. # OF BAGS
ECHEL36IN-C/ECHEL36STIN-C	3
ECHEL48IN-C/ECHEL48STIN-C	4
ECHEL60IN-C	6
ECHEL72IN-C	7

NOTICE: DO NOT EXCEED MAXIMUM AMOUNT OF MEDIA. *Place media as instructed. Flame performance could be impacted. Sooting could occur.*

Cleaning the Media

During shipment of the media, dust and debris can accumulate. It is recommended that the media be rinsed thoroughly with water to remove dust and small particles. An easy method to clean the media is to place the media into a pail and rinse thoroughly. Spread the media out over paper towels and allow the media to dry before installing them into the fireplace.

INSTALLATION

CAUTION! Risk of Burns! *The fireplace should be turned off and cooled before media is installed.*

Note: If both the media and logs will be installed, the logs must be installed first.

1. Set aside a handful of media which will be used later to conceal the pilot end of the burner.

CAUTION! Risk of Cuts, Abrasions or Flying Debris. *Wear protective gloves and safety glasses during installation. Sheet metal edges are sharp.*

2. The media placement jig, shown in Figure 1, MUST be used any time media are placed on the burner to ensure that there is no media in the burner lighting area. Verify that the media placement jig is correctly installed in place in the appliance. See Figure 1.

⚠ WARNING

Delayed Ignition Risk

- Place media according to instructions.
- Do NOT place media in area in front of pilot
- Do NOT place media in a position that they may fall into area in front of pilot.
- Do NOT place media in a position that pieces may fall between the media tray and back of firebox.
- Do NOT use any media other than the Hearth & Home Technologies-supplied options for this fireplace model.
- Do NOT exceed one layer of media on base pan.

Fireplace will not function properly.
Delayed ignition may occur.

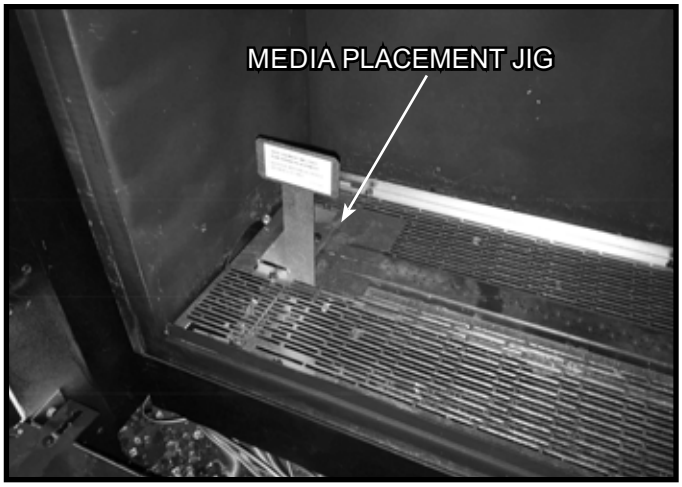

Figure 1 Media Placement Jig Location

3. The media placement jig must remain in place while media is placed on the media tray and around the pilot bracket.

4. Place an even layer of media around the media tray as shown in Figure 2. **DO NOT place media on media placement jig.**

⚠ WARNING

Risk of Asphyxiation or Fumes.

- Place media according to instructions.
- Do NOT place media in area between glass and firebox.
- Do NOT place media in a position that they may fall into area between glass and firebox.
- Do NOT use any media other than the media supplied with this fireplace.

Fireplace will not function properly.
Gas leak may occur.

Figure 2. Media Placement Jig in Place

5. Remove the screw, noted in Figure 3, from the media placement jig and carefully lift the jig out of the appliance. **DO NOT allow any pieces of media to fall into the area in front of the pilot.**

WARNING! Risk of Explosion! DO NOT *place media directly in front of the pilot assembly. Delayed ignition could occur.*

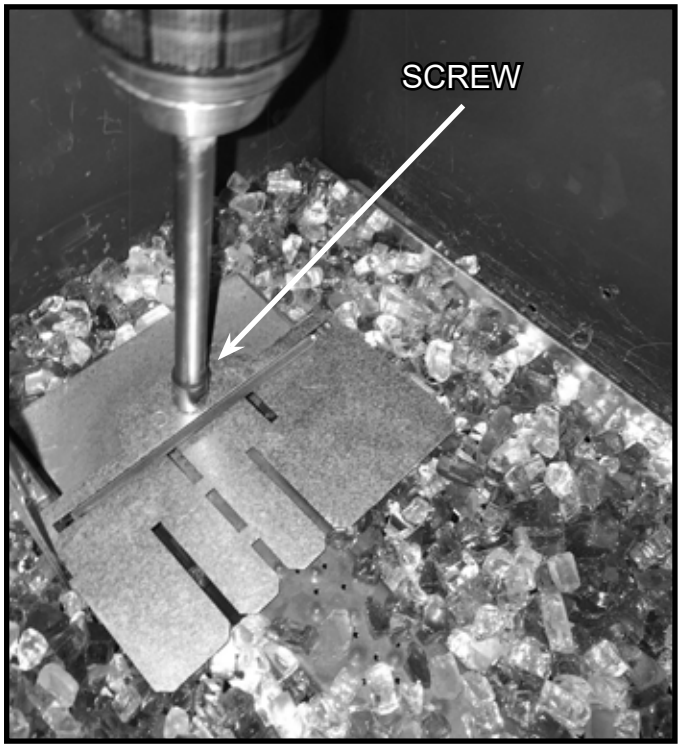

Figure 3. Remove Media Placement Jig

6. Place the media set aside in Step 1 over the pilot shield and areas shown in Figure 4 uncovered by removing the media placement jig. See Figure 4. **DO NOT allow any media in the 1 inch area shown in Figure 5.**

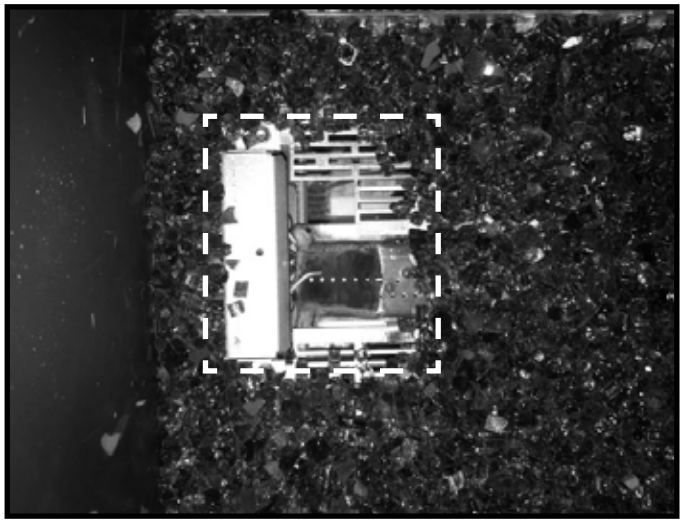

Figure 4. Media Installed with Media Placement Jig Removed

7. Check the pilot area to ensure there is no media in between the end of the burner and the pilot. Performance issues will occur if media is present.

***WARNING! Risk of Explosion! DO NOT** place media between end of burner and pilot. Delayed ignition could occur.*

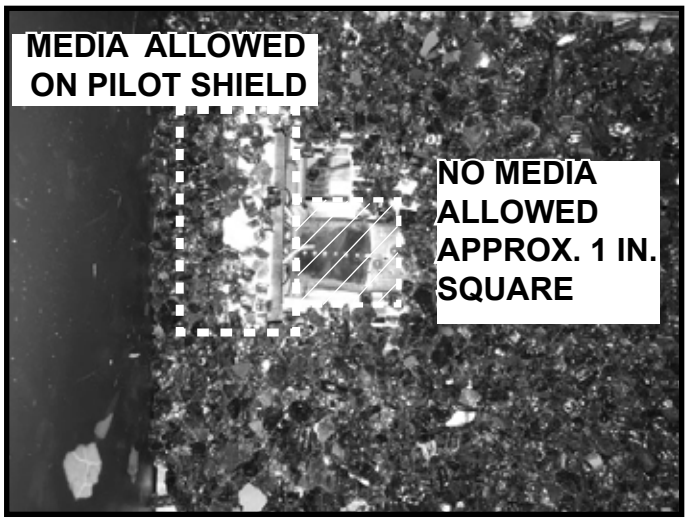

Figure 5. Pilot Shield Media installation.

8. **DO NOT** allow media to fall between the media tray and the back of the firebox. Remove any fallen media before proceeding. See Figure 6.

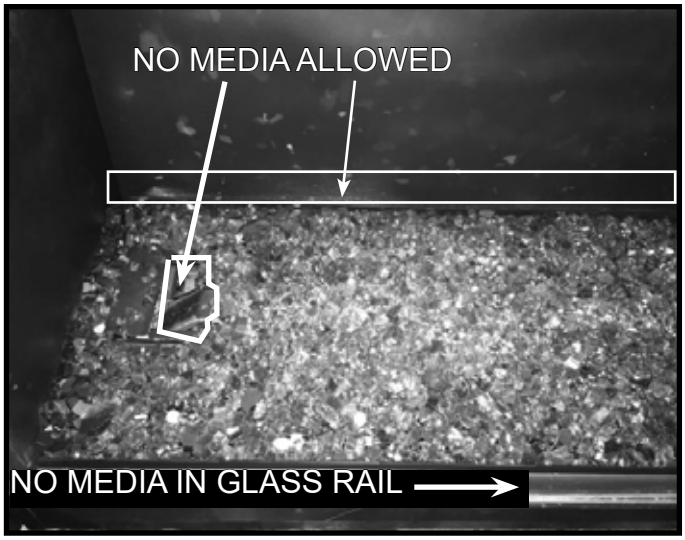

Figure 6. Media Installed

9. **ECHEL60IN-C and ECHEL72IN-C ONLY:**
   DO NOT place media in front of opening on right side of the burner (60 and 72 only). Flame appearance will be affected. See Figure 7.

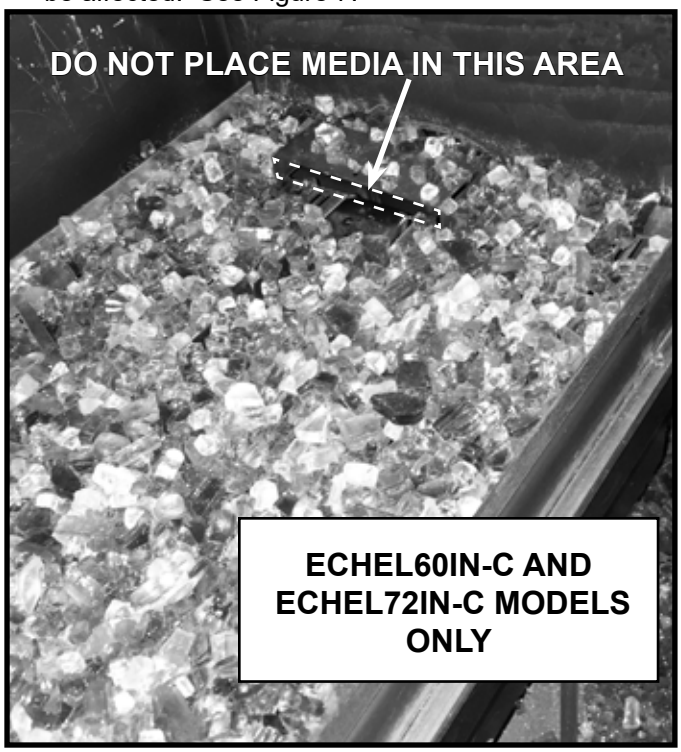

Figure 7. Media Placement Restriction Area

10. Check between the pilot and burner and remove any media that has fallen into this area.
11. Turn the appliance on to verify that the pilot and the burner light properly.
12. Remove any glass media that may have fallen in the bottom glass rail. Glass will not install properly if media is present in glass rail. See Figure 6.
13. Reinstall glass assembly.
14. Install bottom glass shield between glass and glass frame. See Figure 8.
15. Reinstall mesh front.

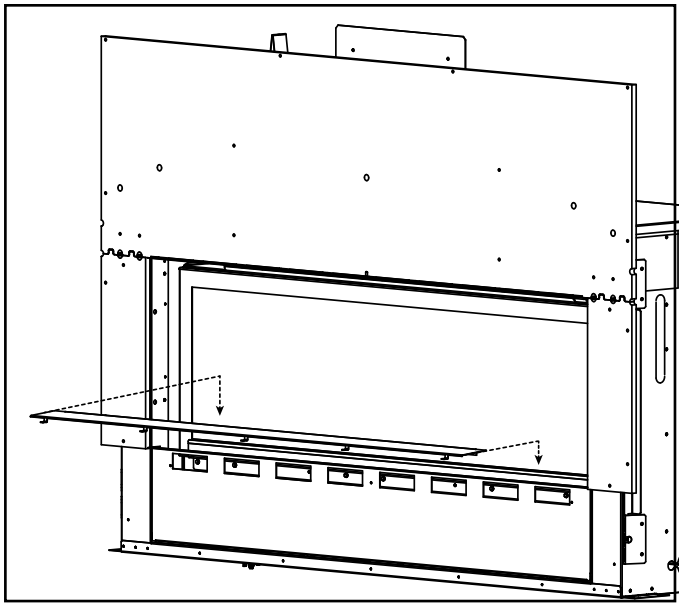

Figure 8. Install Bottom Glass Shield

TROUBLESHOOTING

After the initial start up burn, it may be necessary to adjust the media placement to achieve the best flame appearance. While flame height variation is normal, there may appear to be higher peaks in some areas and low flame peaks in other areas.

If the flame height appears to be excessively high in some spots, applying more media to these areas on top of the burner will help even out the flames. Spreading the media as evenly as possible is the most effective way to achieve optimal flame appearance and the most even flame heights. One or more test burns may be required to watch the flames mature and see how even they look before making adjustments.

G. IntelliFire Touch® Control System Setup

- Detailed instructions for electrical wiring and connections are provided in Section 8.
- Determine if this appliance is equipped with a Module Reset Switch. See Section 8. Verify this switch is in the ON position.
- Verify that the 3-Position switch on the IFT-ECM is switched to the REMOTE position. Detailed Operating Instructions for the IFT-ECM are provided in Section 3.K of the Owner's Manual.

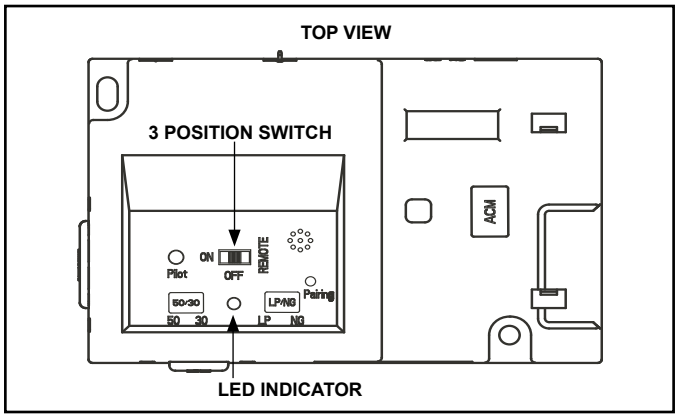

Figure 11.4 IFT-ECM

This appliance is factory-equipped with an IntelliFire Touch remote control. The remote was paired to the fireplace and tested at the factory. It does not need to be paired again, unless an accessory kit will be added at the time of installation. If no additional accessory will be added, simply follow steps one through seven below.

1. If installed, remove batteries from remote.
2. Verify that the new appliance has power and secure electrical connections.
3. Adjust the ECM selector switch to 'REMOTE' mode.
4. Switch the master reset switch to 'ON' (if equipped).
5. Wait to verify LED indicator on the ECM stops flashing.
6. Install batteries in the RC400 remote.
7. The RC400 remote will automatically pair to the appliance as pre-set at the factory.

H. Install Decorative Barrier Front

WARNING! Risk of Fire! *Install ONLY decorative barrier fronts approved by Hearth & Home Technologies. Unapproved decorative barrier fronts could cause fireplace to overheat.*

IMPORTANT! This fireplace requires an installed decorative barrier front to prevent direct contact with the hot viewing glass. DO NOT operate the fireplace with the barrier removed.

Contact your dealer or Hearth & Home Technologies if the barrier is not present or help is needed to properly install one.

For more information refer to the instructions supplied with your decorative barrier front.

12 Reference Materials

A. Vent Components Diagrams

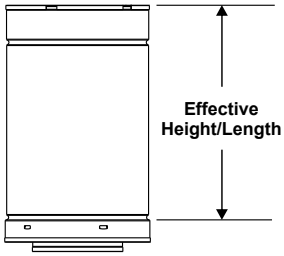

DVP Pipe (see chart)

Pipe	Effective Length	
	Inches	Millimeters
DVP4	4	102
DVP6	6	152
DVP12	12	305
DVP24	24	610
DVP36	36	914
DVP48	48	1219
DVP6A	3 to 6	76 to 152
DVP12A	3 to 12	76 to 305

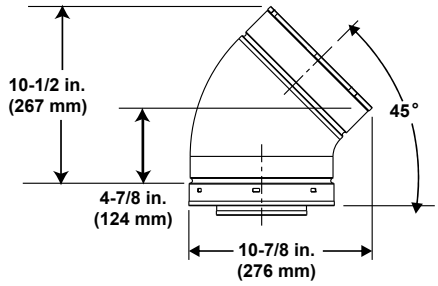

DVP45 (45º Elbow)

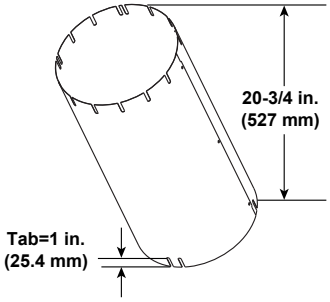

Finished Height: 19-3/4 in./502 mm
UNIV-AS2 (Attic Insulation Shield)

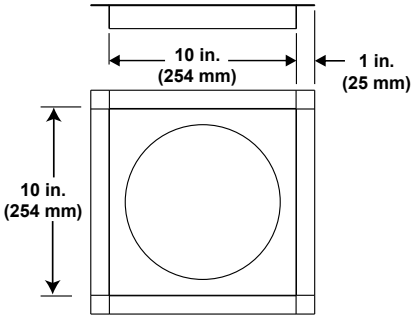

DVP-FS (Ceiling Firestop)

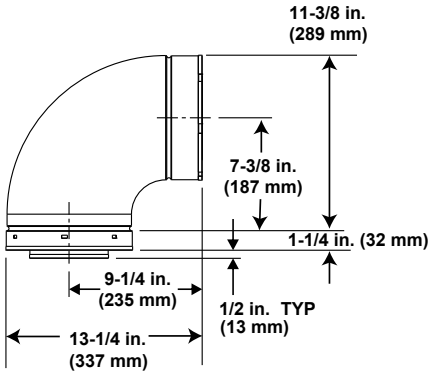

DVP90ST (90° Elbow)

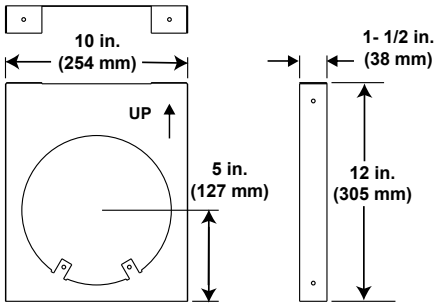

DVP-HVS (Vent Support)

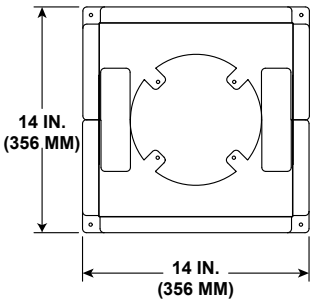

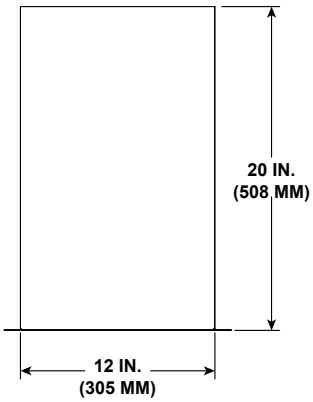

DVP-RDS
ROOF DECK INSULATION SHIELD

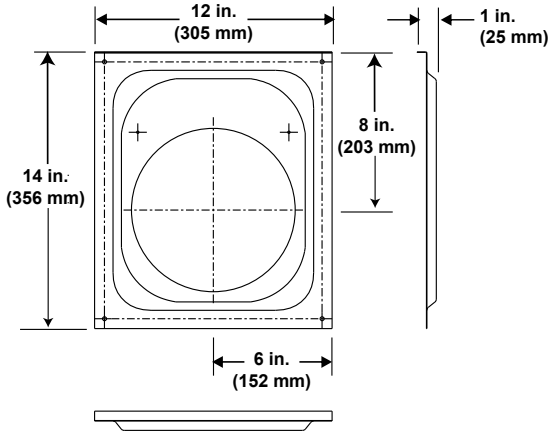

DVP-WS (Wall Shield Firestop)

Figure 12.1 DVP Vent Components

A. Vent Components Diagrams (*continued*)

Note: Heat shields MUST overlap by a minimum of 1-1/2 in. (38 mm). **The heat shield is designed to be used on a wall 4 in. to 7-1/4 in. (102 mm to 184 mm) thick.** If wall thickness is less than 4 in. (102 mm) the existing heat shields must be field trimmed. If wall thickness is greater than 7-1/4 in. (184 mm) a DVP-HSM-B will be required.

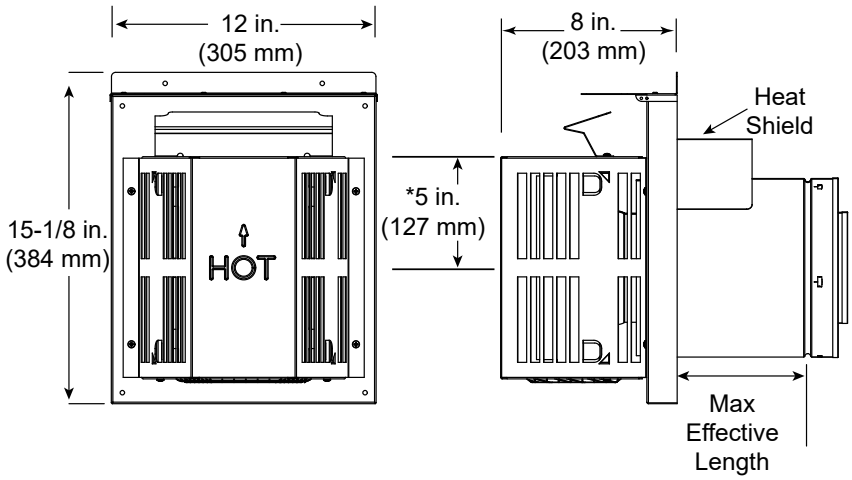

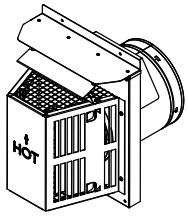

* Center of the horizontal vent pipe to the vertical measuring surface.

Term Cap	Minimum Effective Length	Maximum Effective Length
Trap1	3-1/8 in.	4-5/8 in.
	79 mm	117 mm
Trap2	5-3/8 in.	9-3/8 in.
	137 mm	238 mm

DVP-TRAP
Horizontal Termination Cap

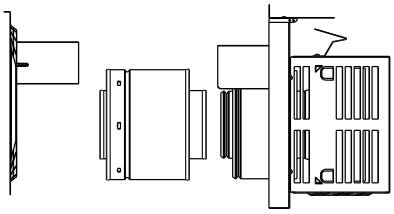

DVP-TRAP1

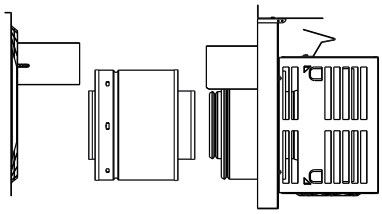

DVP-TRAP2

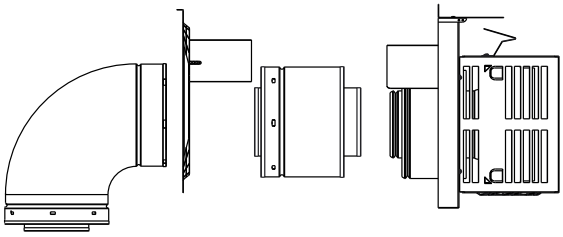

DVP-TRAPK1

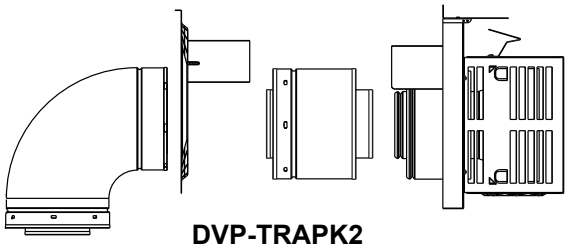

DVP-TRAPK2

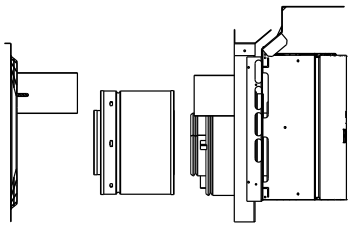

DVP-HPC1
Can adjust 2-1/8 in. (4-1/4 to 6-3/8)

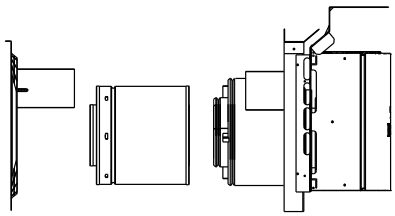

DVP-HPC2
Can adjust 4-1/8 in. (6-3/8 to 10-1/2)

Figure 12.2 DVP Vent Components

A. Vent Components Diagrams (*continued*)

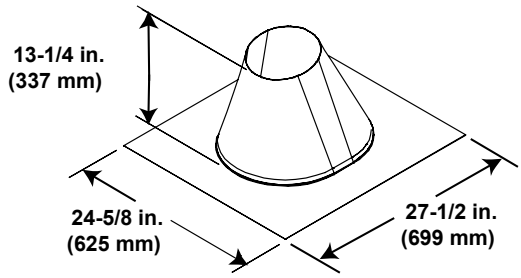

RF6
Roof Flashing

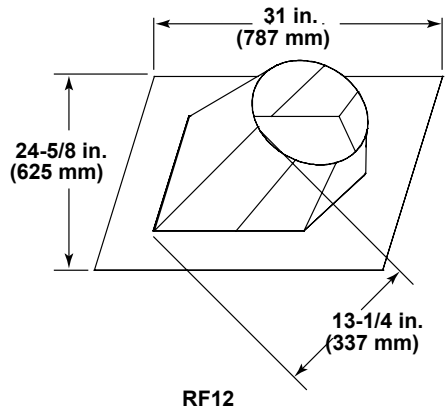

RF12
Roof Flashing

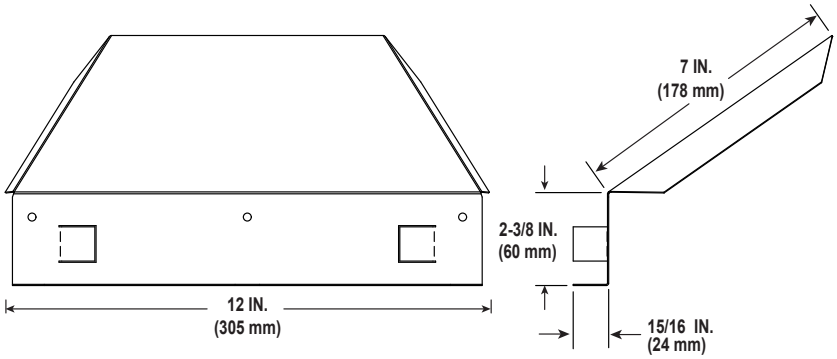

TRAP-VSS
Vinyl Siding Shield

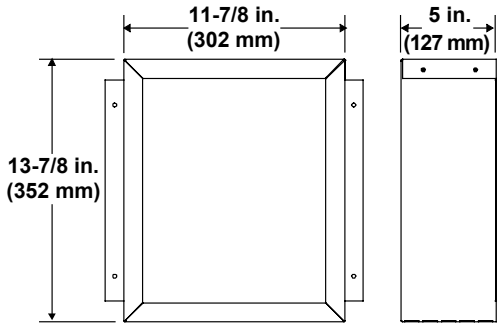

DVP-BEK2
DVP-HPC Cap Brick Extension

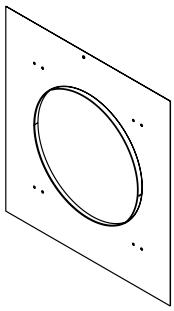

DVP-TRAPFL
Flashing

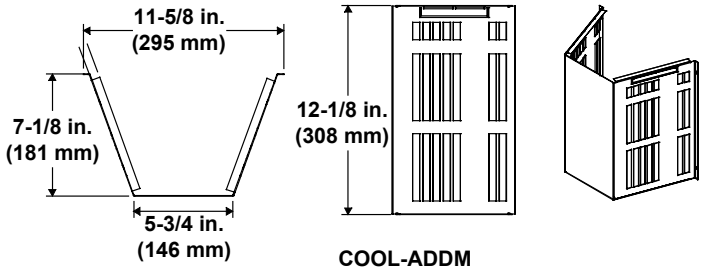

COOL-ADDM
Cap Shield

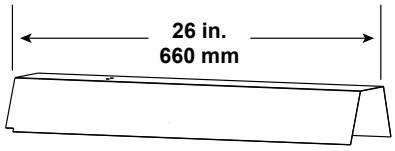

DVP-HSM-B
Extended Heat Shield

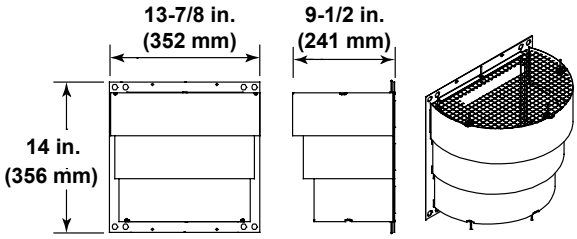

DRC-RADIUS
Cap Shield

Figure 12.3 DVP Vent Components

A. Vent Components Diagrams (*continued*)

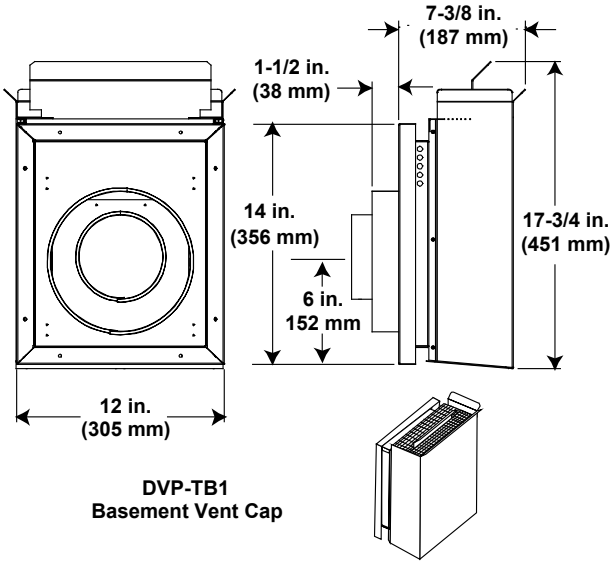

DVP-TB1
Basement Vent Cap

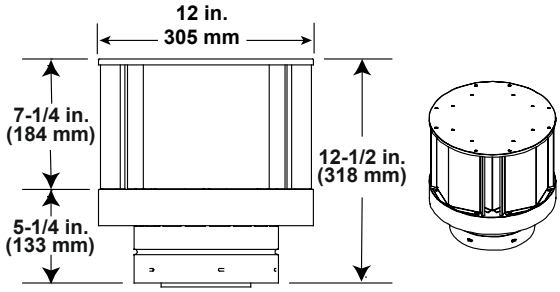

DVP-TVHW
VerticalTermination Cap (Highwind)

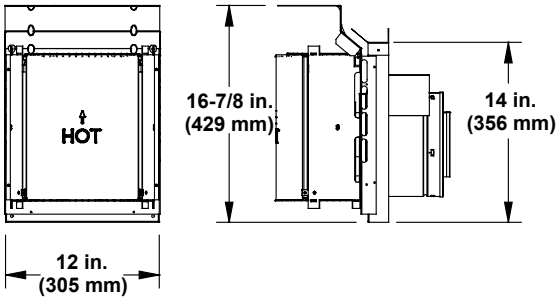

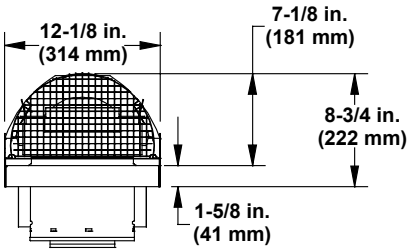

DVP-HPC
High Performance Cap

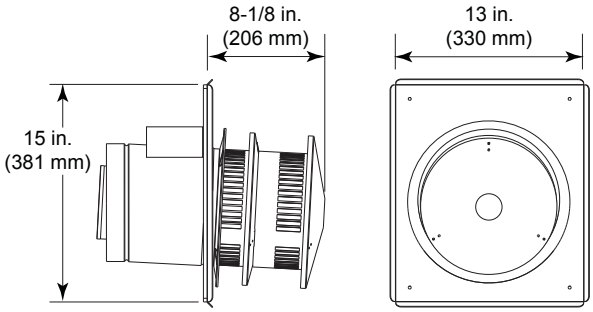

DVP-HRC-SS

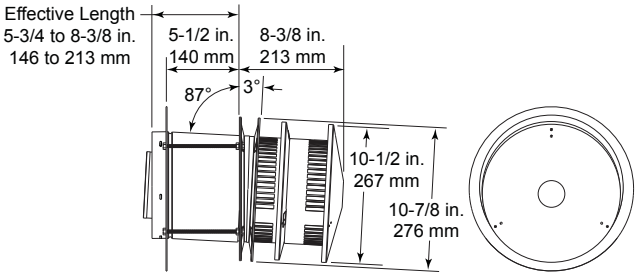

DVP-HRC-ZC-SS

Figure 12.4 DVP Vent Components

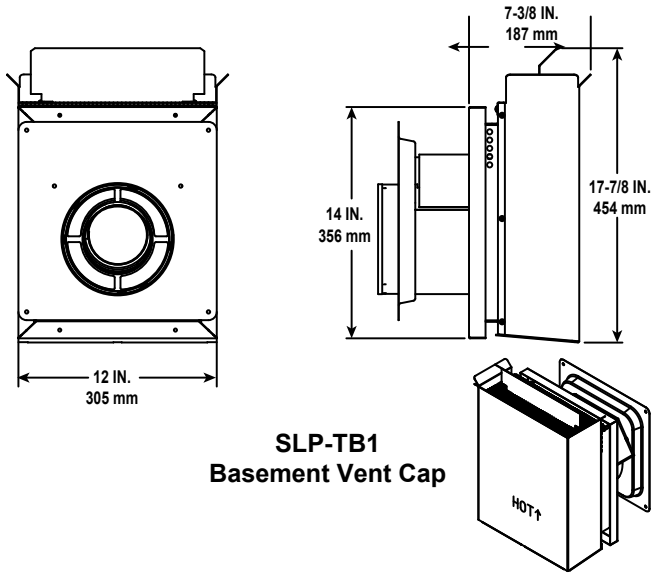

Figure 12.5 Vent Components

DECORATIVE TERMINATIONS/SHROUDS

Only use listed decorative termination caps/shrouds with Hearth & Home Technologies approved venting systems.

This applies to both DVP and SLP venting systems.

Decorative Terminations Caps/Shrouds

DTO134
DTO146
DTS134
DTS146
LDS33
LDS46
LDS-BV

A. Vent Components Diagrams (*continued*)

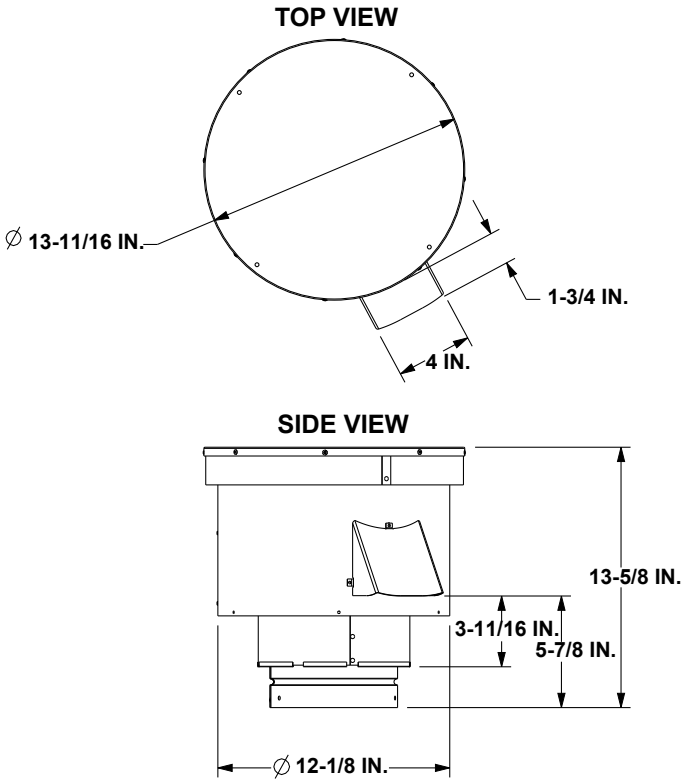

PVV-SLP
Vertical Power Vent

Required Wire Harness and PVV-SLEEVE	
Lengths Available	**Part Number**
10 ft. PV Wire Harness	PVI-WH10
20 ft. PV Wire Harness	PVI-WH20
40 ft. PV Wire Harness	PVI-WH40
60 ft. PV Wire Harness	PVI-WH60
80 ft. PV Wire Harness	PVI-WH80
100 ft. PV Wire Harness	PVI-WH100
Description	**Part Number**
12 in. Wire Harness Sleeve	PVV-SLEEVE-12
48 in. Wire Harness Sleeve	PVV-SLEEVE-48

Note: A wire harness is required to power the PVV-SLP and connect it to the appliance. It is ordered separately from the PVV-SLP. Contact your dealer to order.

Note: The PVV-SLEEVE-12 and/or PVV-SLEEVE-48 is required to be installed with the PVV-SLP. It is ordered separately from the PVV-SLP. Contact your dealer to order.

Figure 12.6 PVV-SLP Vent Components

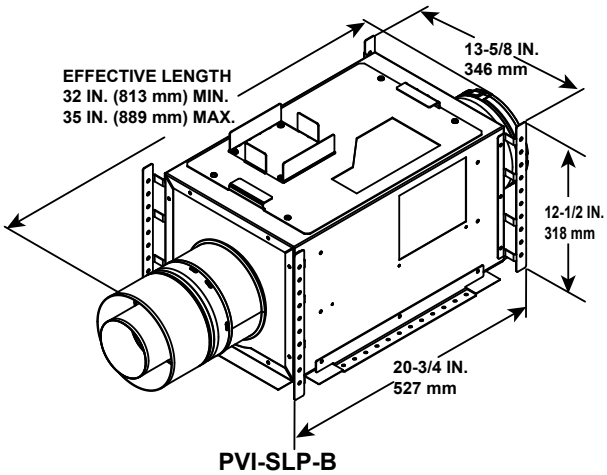

PVI-SLP-B
Power Vent Inline

Note: SLP-LPC, SL-2DVP and DVP-2SL components must be accompanied by a PVI-SLP-B.

Optional Wire Harness	
DESCRIPTION	**PART NUMBER**
10 FT PV Wire Harness	PVI-WH10
20 FT PV Wire Harness	PVI-WH20
40 FT PV Wire Harness	PVI-WH40
60 FT PV Wire Harness	PVI-WH60
80 FT PV Wire Harness	PVI-WH80
100 FT PV Wire Harness	PVI-WH100

Note: Wire harnesses required to power the PVI-SLP-B connect to the appliance and are ordered separately from PVI-SLP-B. Contact your dealer to order.

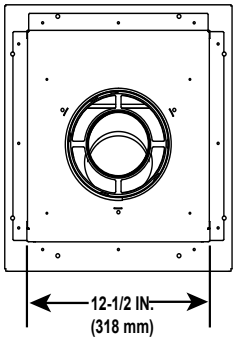

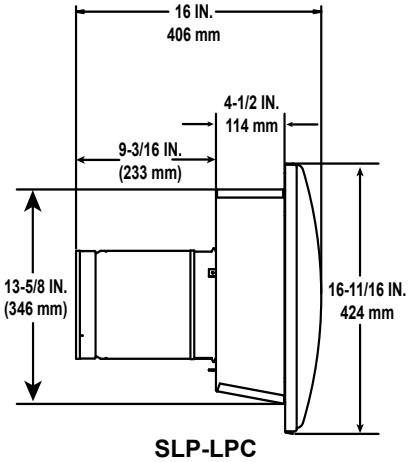

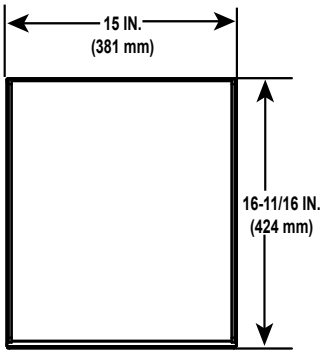

SLP-LPC
SLP Low Profile Cap
(Approved for use with PVI-SLP-B only)

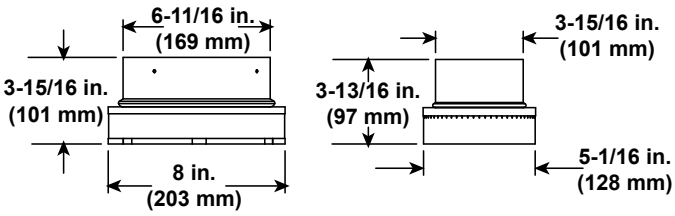

SL-2DVP
Adapter

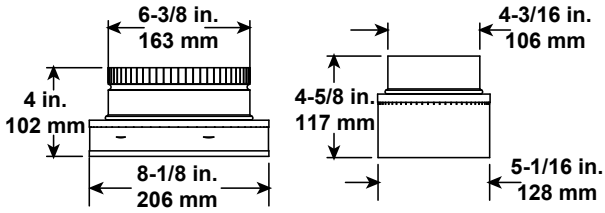

DVP-2SL
Adapter

Figure 12.5 PVI-SLP-B Vent Components

A. Vent Components Diagrams *(continued)*

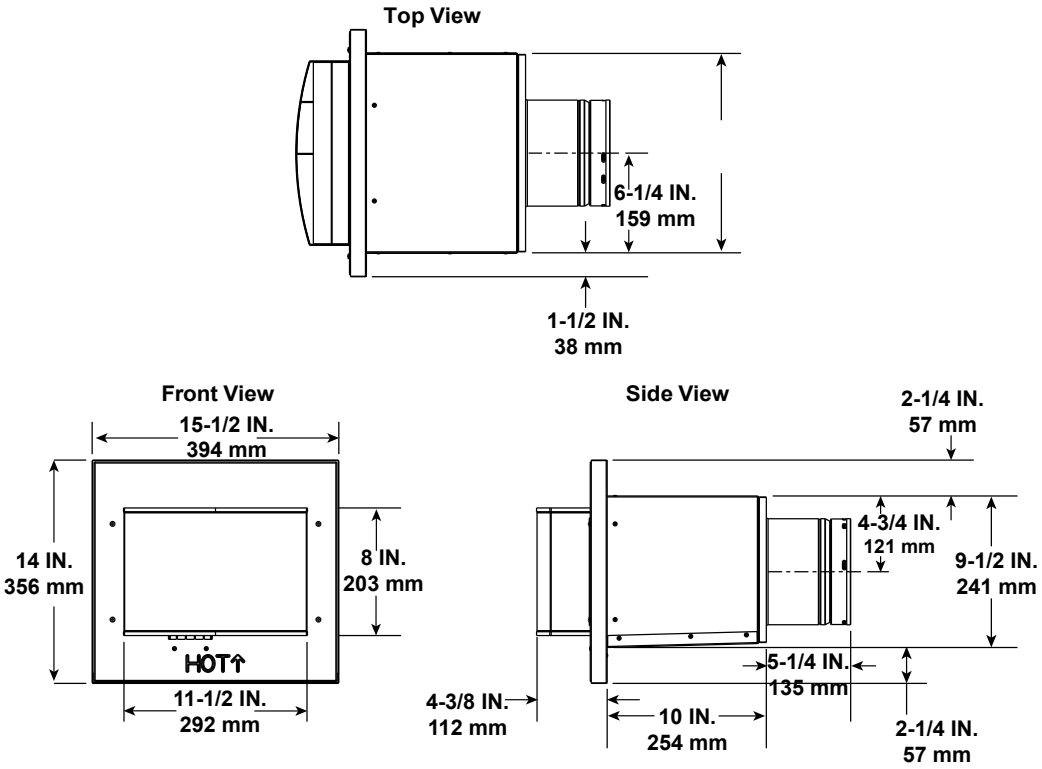

PVLP-SLP
Power Vent Low Profile

Note: Wire harnesses required to power the PVLP-SLP connect to the appliance and are ordered separately from PVLP-SLP. Contact your dealer to order.

Note: A PVLP-HS heat shield is available and sold separately. Use if the PVLP-SLP is installed in a high traffic area.

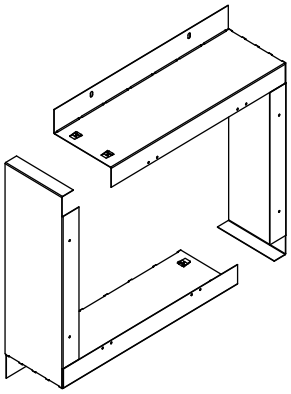

PVLP-BEK
Brick Kit

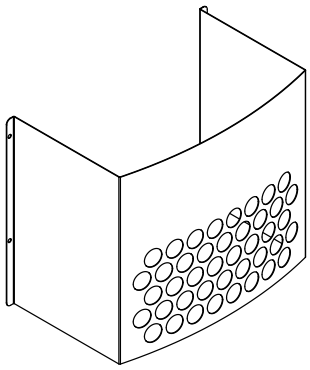

PVLP-HS
Heat Shield

Required Wire Harness	
DESCRIPTION	**PART NUMBER**
10 FT PV Wire Harness	PVI-WH10
20 FT PV Wire Harness	PVI-WH20
40 FT PV Wire Harness	PVI-WH40
60 FT PV Wire Harness	PVI-WH60
80 FT PV Wire Harness	PVI-WH80
100 FT PV Wire Harness	PVI-WH100

Figure 12.6 PVLP-SLP Vent Components

B. Accessories

Install approved accessories per instructions included with accessories. Contact your dealer for a list of approved accessories.

WARNING! Risk of Fire and Electric Shock! *Use ONLY Hearth & Home Technologies-approved optional accessories with this appliance. Using non-listed accessories could result in a safety hazard and will void the warranty.*

Remote Controls, Wall Controls and Wall Switches

Follow the instructions supplied with the control installed to operate your fireplace:

For safety:

- Install a switch lock or a wall/remote control with child protection lockout feature.
- Keep remote controls out of reach of children.

See your dealer if you have questions.

Optional Heat Management Systems Kits

After a qualified service technician has installed the heat management system, follow the instructions supplied with the kit for operation. Contact your dealer if you have questions.

Note: Optional heat management systems kit must be installed while the top of the appliance is accessible.

- Preparation for installation of Heat-Zone-Gas, HEAT-OUT-GAS or Passive Heat is discussed in Section 6.B.

Majestic, a brand of Hearth & Home Technologies
7571 215th Street West, Lakeville, MN 55044
www.majesticproducts.com

Please contact your Majestic dealer with any questions or concerns.
For the location of your nearest Majestic dealer,
please visit www.majesticproducts.com.

Printed in U.S.A. - Copyright 2024