OUTDOOR KITCHEN MK01SS304 | MK02SS304 | MK03SS304 | MK04SS304 | MK06SS304 | MK07SS304

COOK LIKE A GOD

THOR KITCHEN®

USE & CARE MANUAL

USE AND CARE MANUAL

OUTDOOR KITCHEN SUITE

MK01SS304 | MK02SS304 | MK03SS304

MK04SS304 | MK06SS304 | MK07SS304

THOR KITCHEN®

Warnings

These are the most critical warnings summarized below.

******WARNING******

• If the instructions in this manual are not followed exactly, a fire or explosion may result, causing property damage, personal injury or death.

• Do not store or use gasoline or other flammable substances and liquids near this or other appliance,

• Installation of this appliance must be done by a qualified, service agency or gas supplier.

What to do if you smell gas

• Do not light any appliance

• Do not touch an electrical switch

• Immediately call the gas supplier from a neighbor's phone

• Follow the gas supplier's instructions

• If you cannot reach the gas supplier, call the fire department

Welcome

Thank you for purchasing your Thor Kitchen Appliance! We appreciate your business and we recommend that you read this entire User's Manual before operating your new appliance for the first time.

This manual contains instructions on how to properly install and set up your new range, as well as insights into the unique features that our product offers. Please keep this manual for future reference, as it contains answers to questions that you might have as you begin to cook.

For any inquiries, please reach our customer service support at +1 877-288-8099 at our business hours or email service@thorgroup.us.

Thank you,

Thor Group

This manual applies to the following models' series:

Model # MK03SS304 (Outdoor Grill Cabinet)

Model # MK04SS304 (Outdoor BBQ Grill)

Parts Explosive Pictures

If you are missing any part, please contact Thor Kitchen Customer Service Department at +1 877-288-8099 at business hours, or email service@thorgroup.us for help. Please provide your proof of purchase for warranty verification.

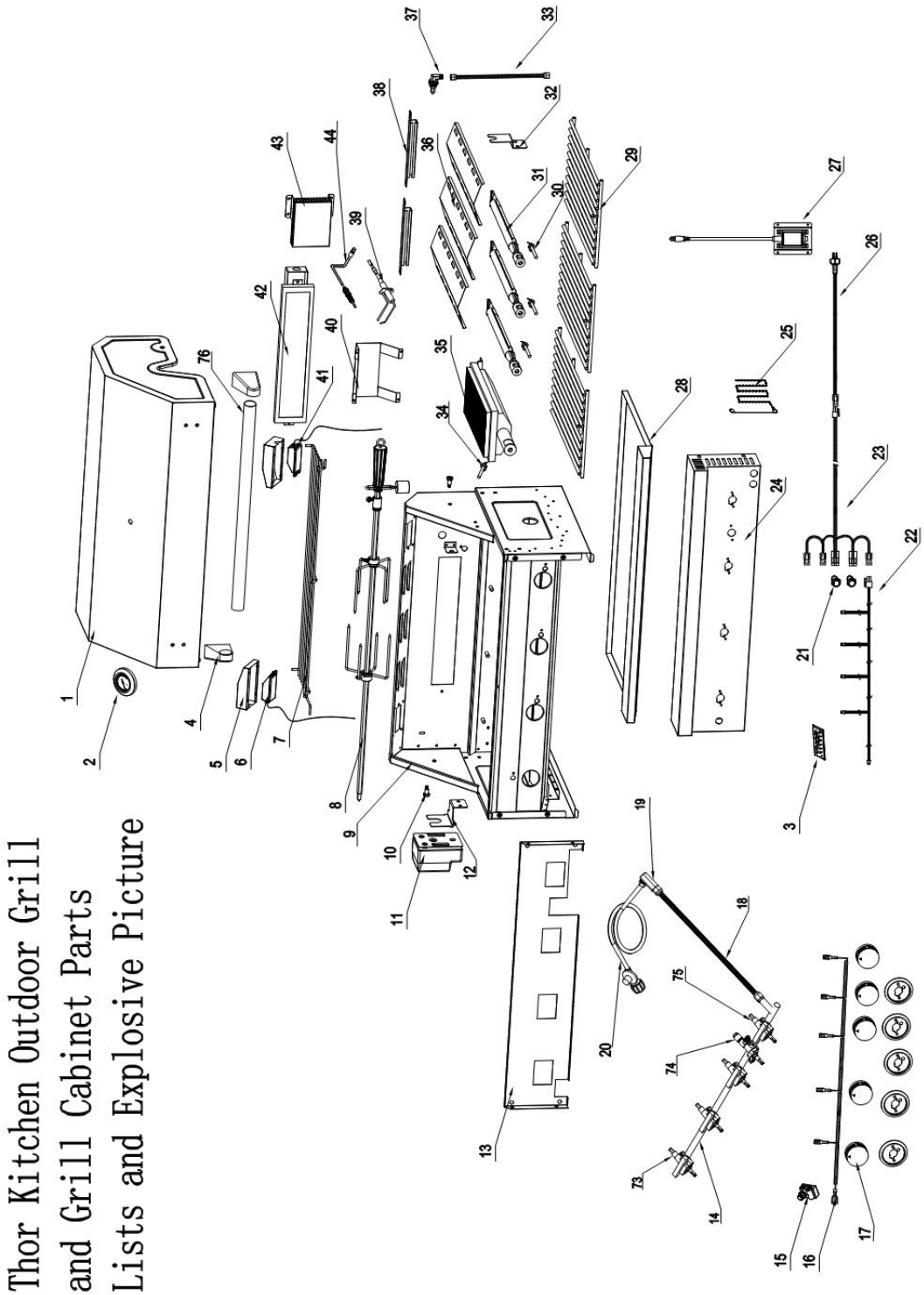

service@thorgroup.us +1 877-288-8099

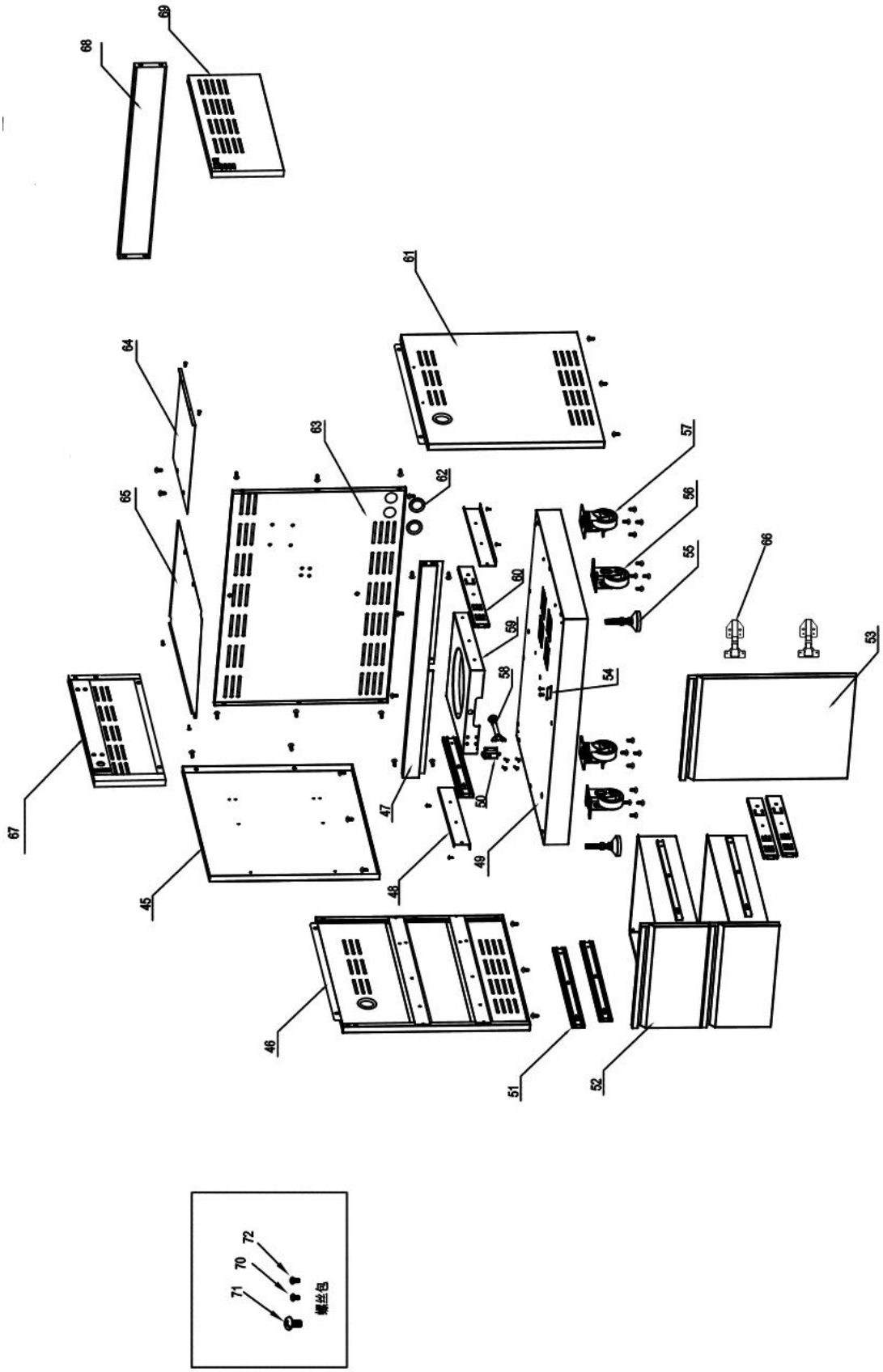

service@thorgroup.us +1 877-288-8099

Parts List

Explosive #	Part #	Part Name	Quantity
1	22.99.008092-000-A0	Grill Top Cover	1
2	05.99.008024-000-A0	Thermometer	1
3	08.01.008041-000-A0	logo	1
4	12.02.000070-000-A0	left handle holder	1
5	04.01.008107-000-A0	Light Cover	2
6	07.04.008001-000-A0	Light #1	1
7	13.99.008002-000-A0	Top warming rack	1
8	05.99.008011-000-A0	Rotisserie	1
9	22.99.009207-000-A0	Grill Cavity	1
10	06.07.008002-000-A1	Top cover rotary pin	2
11	07.14.008001-000-A0	Motor	1
12	04.01.008057-000-A0	Motor holder	1
13	04.03.008002-000-A1	Burner valve holding plate	1
14	22.99.009209-000-A0	Main manifold	1
15	07.07.008004-000-A0	5-point Spark Module	1
16	07.06.008003-000-A0	Main burner ignition harness	1
17	14.01.008001-000-A0	Main Burner Knob	5
18	11.01.008001-000-A0	corrugated pipe	1
19	05.07.008001-000-A0	Embedded joint	1
20	07.99.000266-000-A0	Gas regulator and gas pipe	1
21	07.02.008012-000-A0	Metal push button	2
22	07.06.008006-000-A0	Main burner knob light wiring	1
23	07.06.008002-000-A0	Main switch wiring	1
24	19.07.008002-000-A0	Grill control panel	1
25	05.09.008002-000-A0	match holder	1
26	07.06.008005-000-A0	Main burner power plug	1
27	07.14.008002-000-A0	American-standard transformer	1
28	20.01.008015-000-A2	Grease tray	1
29	13.02.008002-000-A0	Cooking rack	1
30	10.09.008009-000-A0	Main burner electrode	3
31	10.01.008002-000-A2	Tube burner	3
32	04.01.008058-000-A0	Rotisserie holder	1
33	10.04.008002-000-A0	Back broil burner corrugated pipe	1
34	10.09.008010-000-A0	Front broil burner electrode	1
35	10.10.008007-000-A0	Infrared broil burner	1

36	04.01.008051-000-A0	flame tamer	3
37	10.05.008002-000-A0	Back broil burner orifice - LP	1
38	20.01.008014-000-A1	flame transferring welding plate	2
39	10.09.008004-000-A0	Back broiler burner electrode	1
40	04.01.008060-000-A1	Back broiler burner protection cover	1
41	07.04.008002-000-A0	Light #2	1
42	10.99.008001-000-A0	Back broil burner	1
43	04.01.008053-000-A0	gas-collecting hood	1
44	10.99.008002-000-A0	Temperature rod	1
45	20.01.008086-000-A0	Clapboard welding part	1
46	20.01.008082-000-A0	Left side panel A welding assembly	1
47	20.01.008087-000-A0	beam welding assembly	1
48	04.01.008119-000-A0	LP tank supporting slide	2
49	20.01.008079-000-A0	tank bottom welding assembly	1
50	05.17.008003-000-A0	Snap bolt	1
51	05.14.008001-000-A0	Slideway	4
52	22.99.009199-000-A0	Drawer assembly	2
52.1	20.01.008051-000-A0	drawer front panel welding plate	2
52.2	04.01.008179-000-A0	drawer front panel lining	2
52.3	04.01.008180-000-A0	drawer middle plate	2
52.4	04.01.008181-000-A0	drawer bottom plate	2
53	22.99.009217-000-A0	Door assembly	1
54	04.01.002596-000-A1	Door barrier strip	1
55	05.01.008004-000-A0	Supporting leg	2
56	05.10.000122-000-A0	Fixed caster	2
57	05.10.000123-000-A0	Universal caster with Brake	2
58	05.13.008153-000-A0	Tank fixing rod	1
59	04.01.008117-000-A0	Tank bottom support	1
60	05.14.008012-000-A0	14" Sliders	4
61	20.01.008080-000-A0	Right side panel A welding assembly	1
62	06.08.008078-000-A0	Rubber gasket	4
63	20.01.008084-000-A0	Back panel A welding assembly	1
64	04.01.008183-000-A0	gas tank heat shield	1
65	04.01.008182-000-A0	Laminate board	1
66	05.03.008001-000-A0	Door Hinge	2

67	20.01.008083-000-A0	Left side panel B welding assembly	1
68	20.01.008085-000-A0	Back Panel B welding assembly	1
69	20.01.008081-000-A0	Right side panel B welding assembly	1
70	06.10.000022-000-A0	5/32“Philips thumb head screw	52
71	06.02.000093-000-A0	1/4“*14 Philips thumb head screw with anti-slip design	59
72	06.11.008056-000-A0	5/32" *8 flat head screw	12
73	09.01.008008-000-A0	front broil burner valve	1
74	09.04.008003-000-A0	back broil burner valve	1
75	09.01.008007-000-A0	main burner valve	3
76	12.01.008002-000-A0	Top cover handle	1
77	04.01.002580-000-A0	cabinet back connecting plate	2

service@thorgroup.us +1 877-288-8099

Product Dimension

MK04SS304 Thor Kitchen Outdoor BBQ Grill

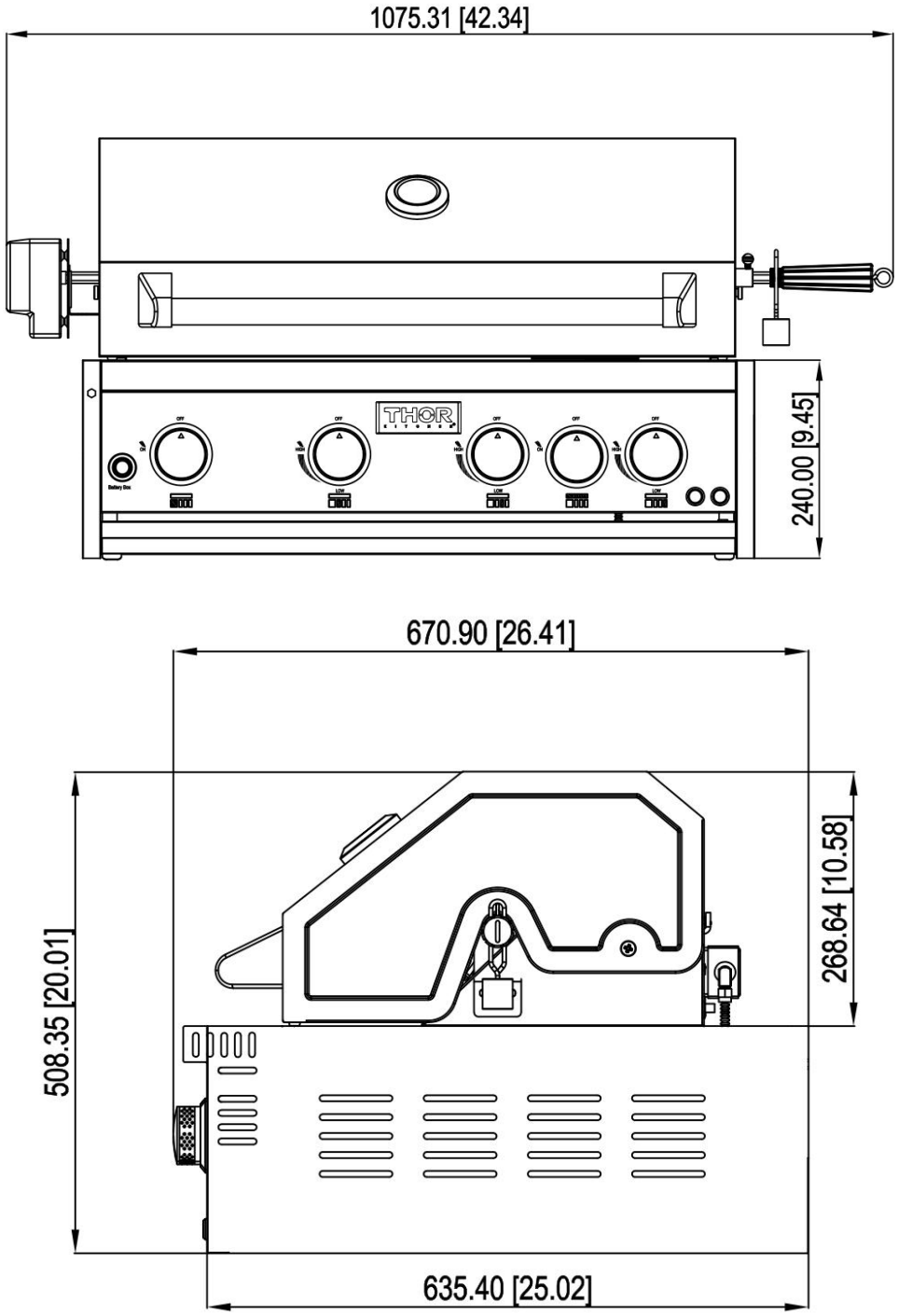

service@thorgroup.us +1 877-288-8099

MK03SS304 for Outdoor Grill Cabinet

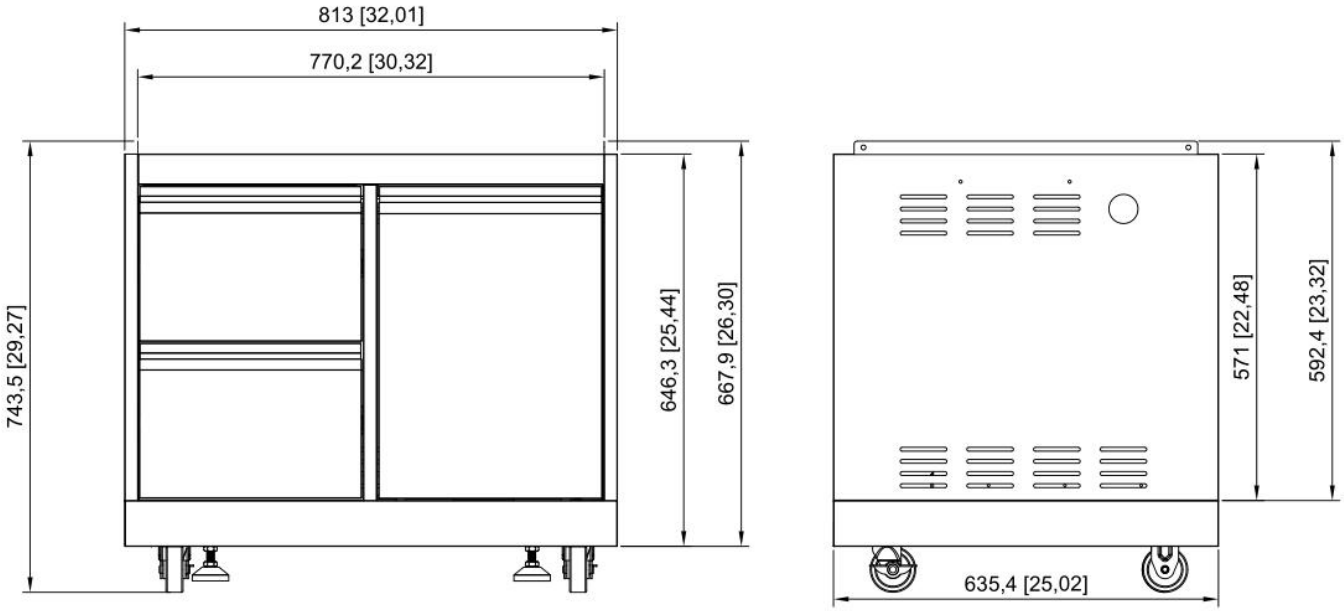

Outdoor Grill + Cabinet

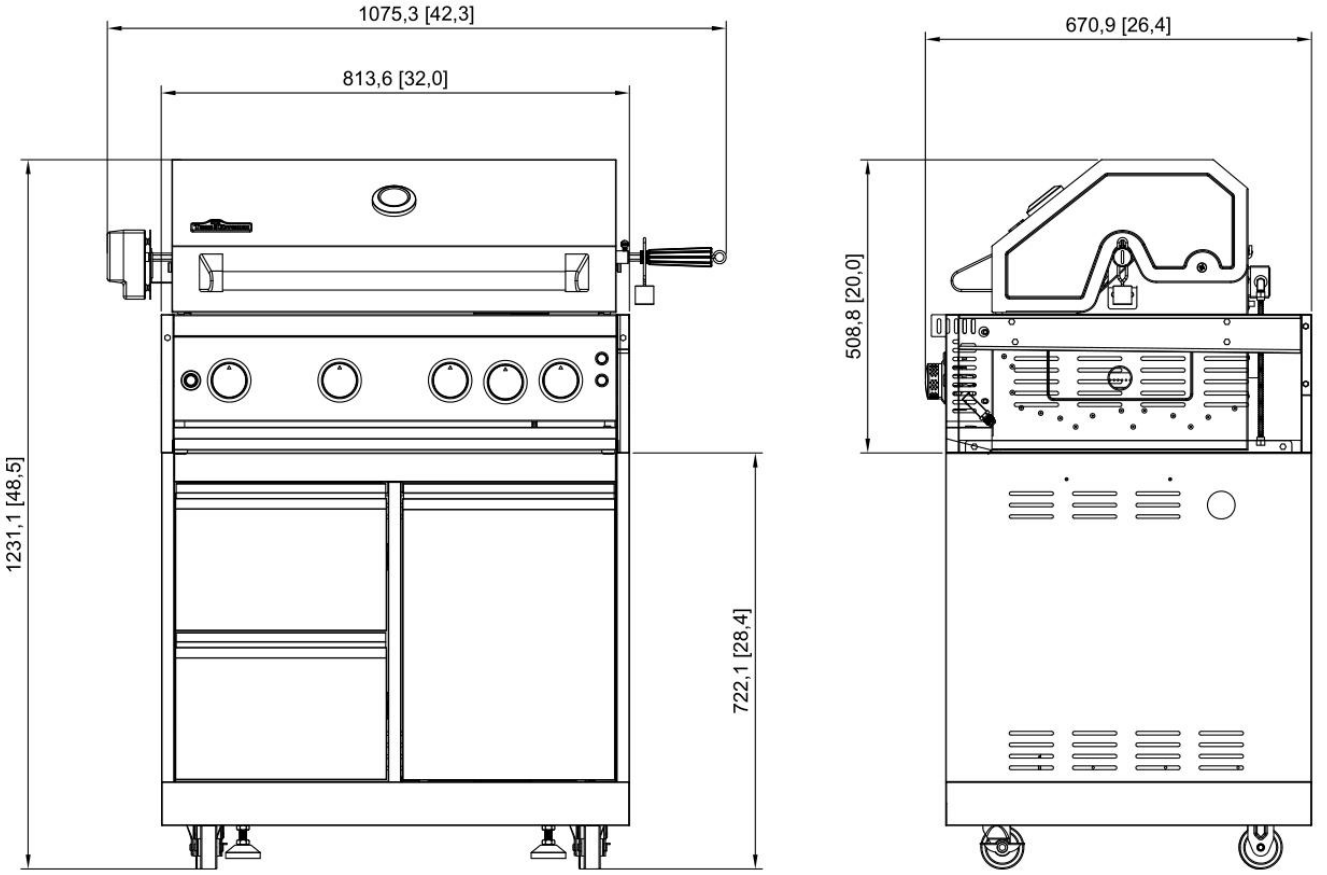

service@thorgroup.us +1 877-288-8099

Cabinet Installation

Step 1

1. Flip the bottom base welding assembly (Part #49) so in order to install legs and casters

2. Use 16 pcs ¼” *14 Philips thumb head screw with anti-slip design (Part #71) to install 2 pcs supporting legs (Part #55), 2 pcs fixed casters (Part #56) and 2 pcs universal casters with brake (Part #57)

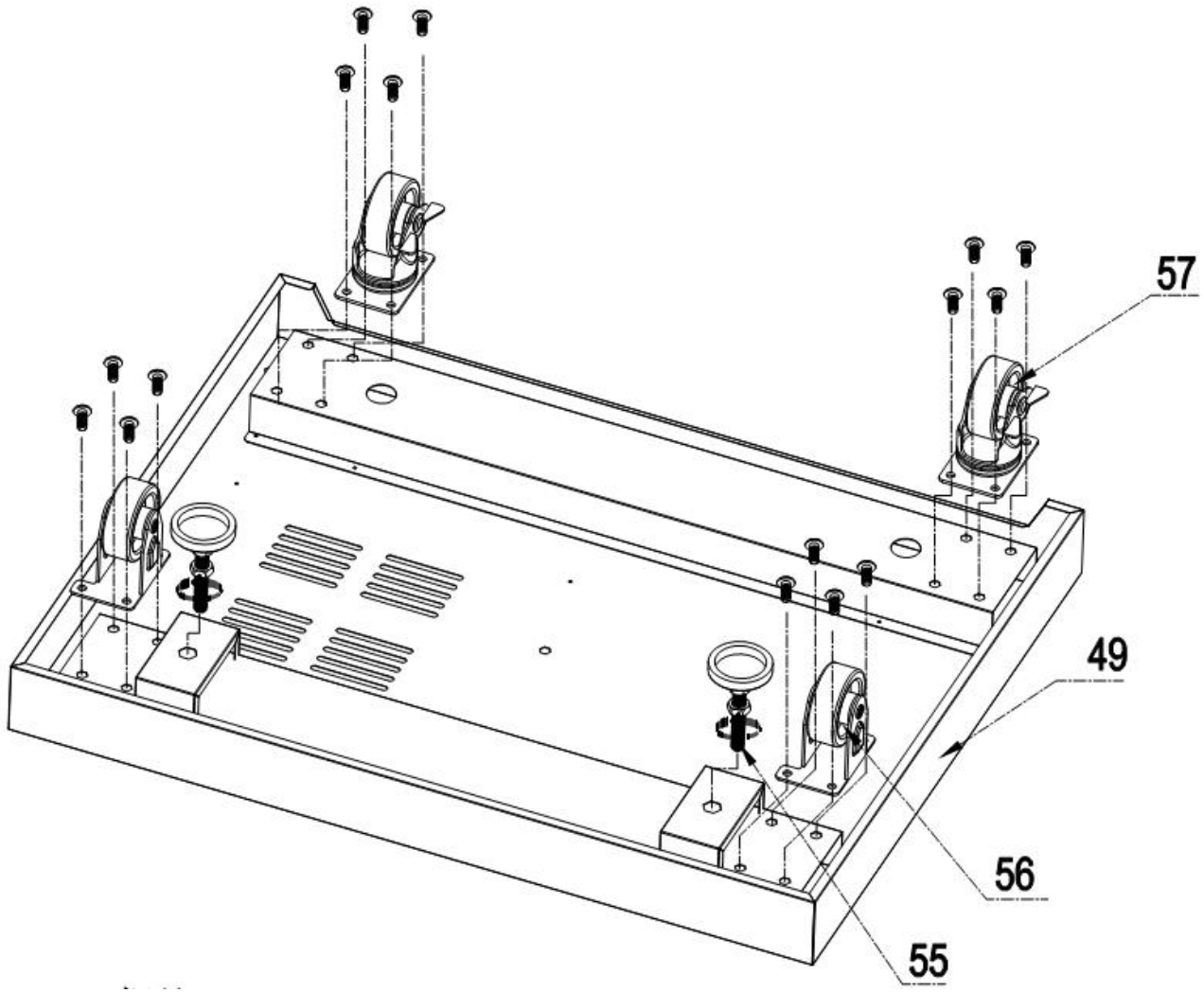

Step 2

1. Flip back the bottom base after casters and legs are installed;
2. Use 4 pcs 5/32” *8 flat head screw (Part # 72) to connect Tank bottom support (Part # 59) to bottom base welding assembly (Part # 49);
3. Use 2 pcs 5/32” *8 flat head screw (Part # 72) to connect Door barrier strip (Part # 54) to bottom base welding assembly (Part #49);

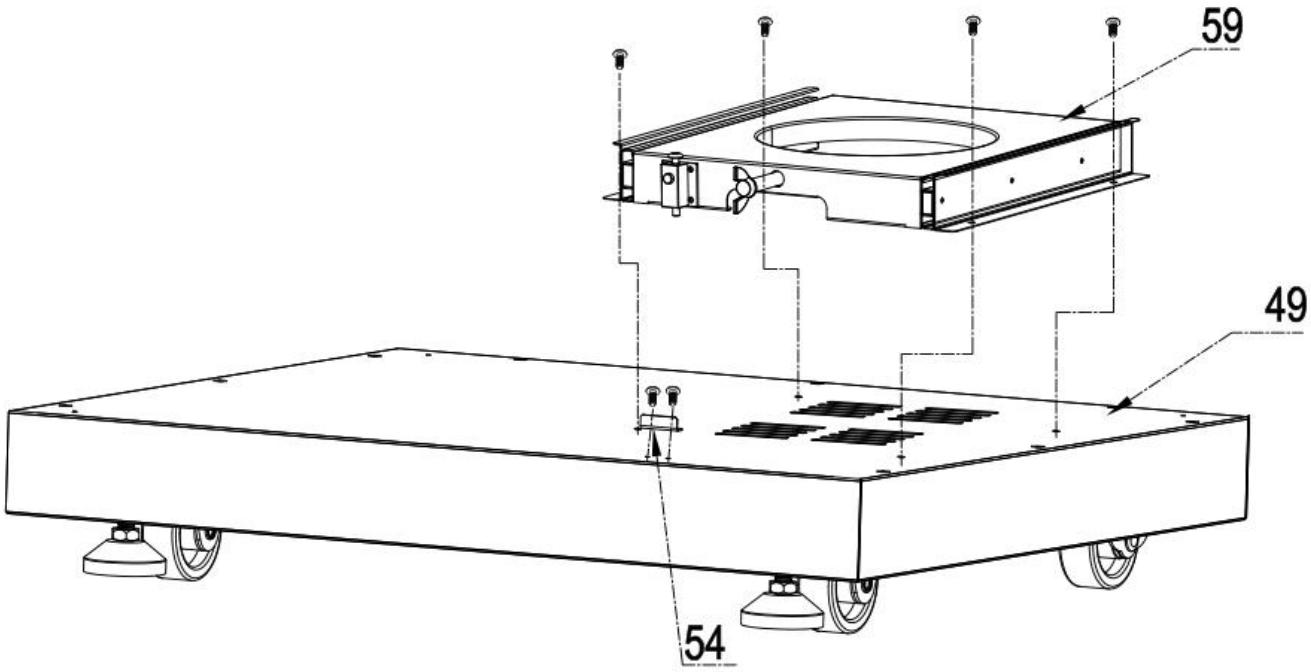

Step 3

1. Use 6 pcs 1/4“*14 Philips thumb head screw with anti-slip design (Part #71) to Left side panel A welding assembly (Part #46) and Right-side panel A welding assembly (Part # 61) to bottom base welding assembly (Part #49);
2. Attach 2 pcs Rubber gaskets to related position on Part #46 and Part #61;

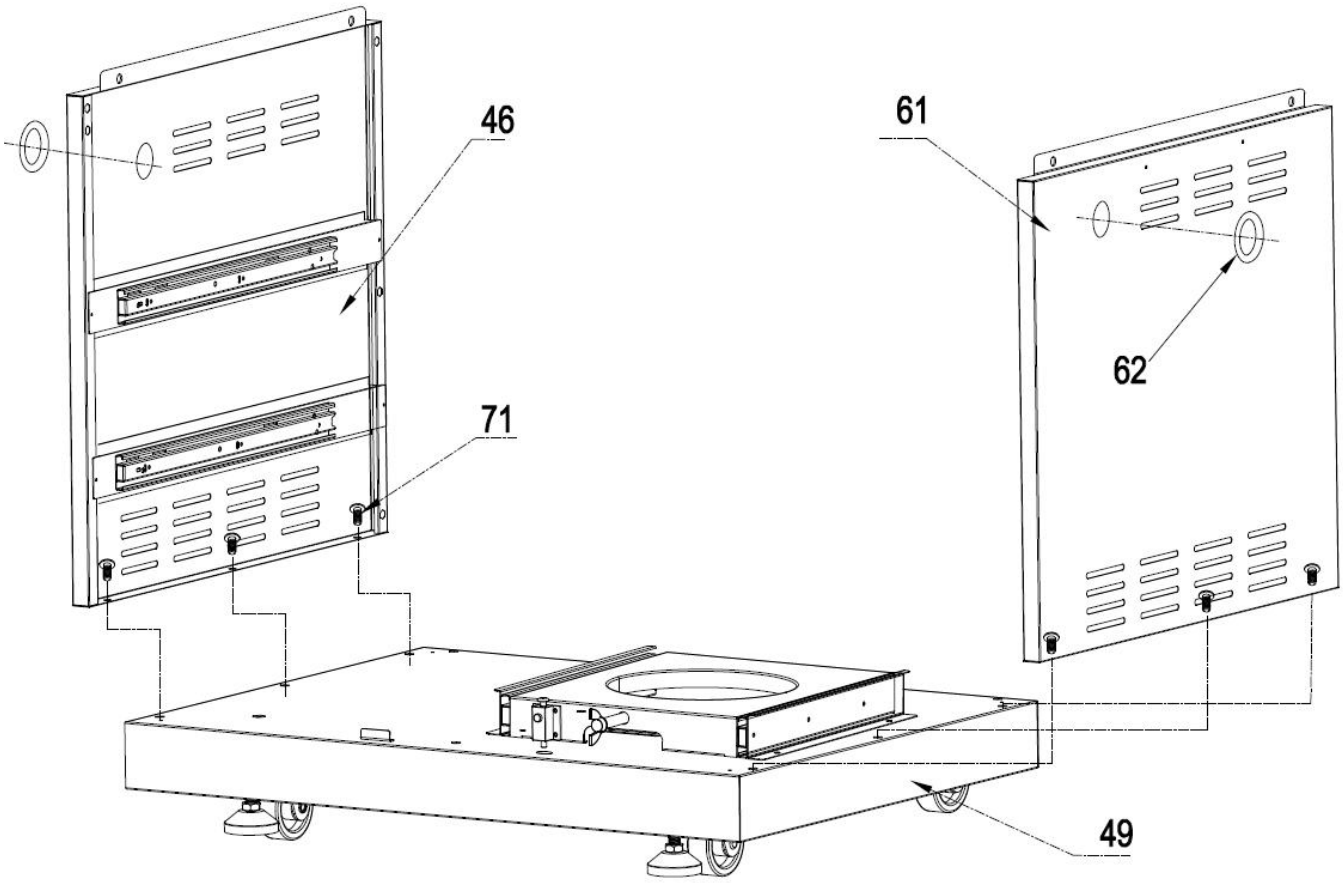

Step 4

1. Use 4 pcs 5/32” *8 flat head screw (Part # 72) to install American-standard transformer (Part # 27) on Back panel A welding assembly (Part # 63); Do not break the power plug on the bottom and the buckle on the top.
2. Attach 2 pcs Rubber gasket (Part # 62) to related position on Part # 63;

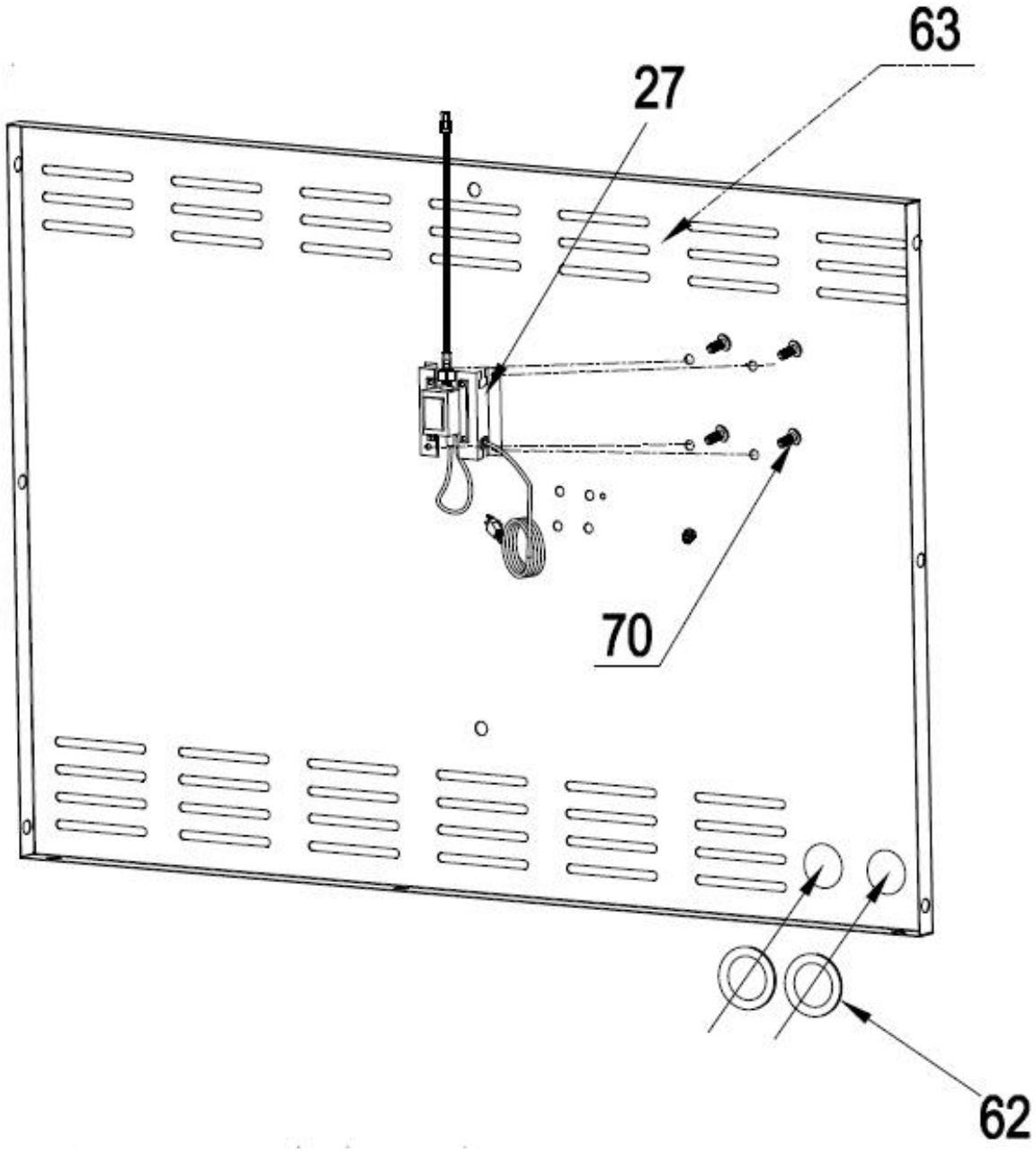

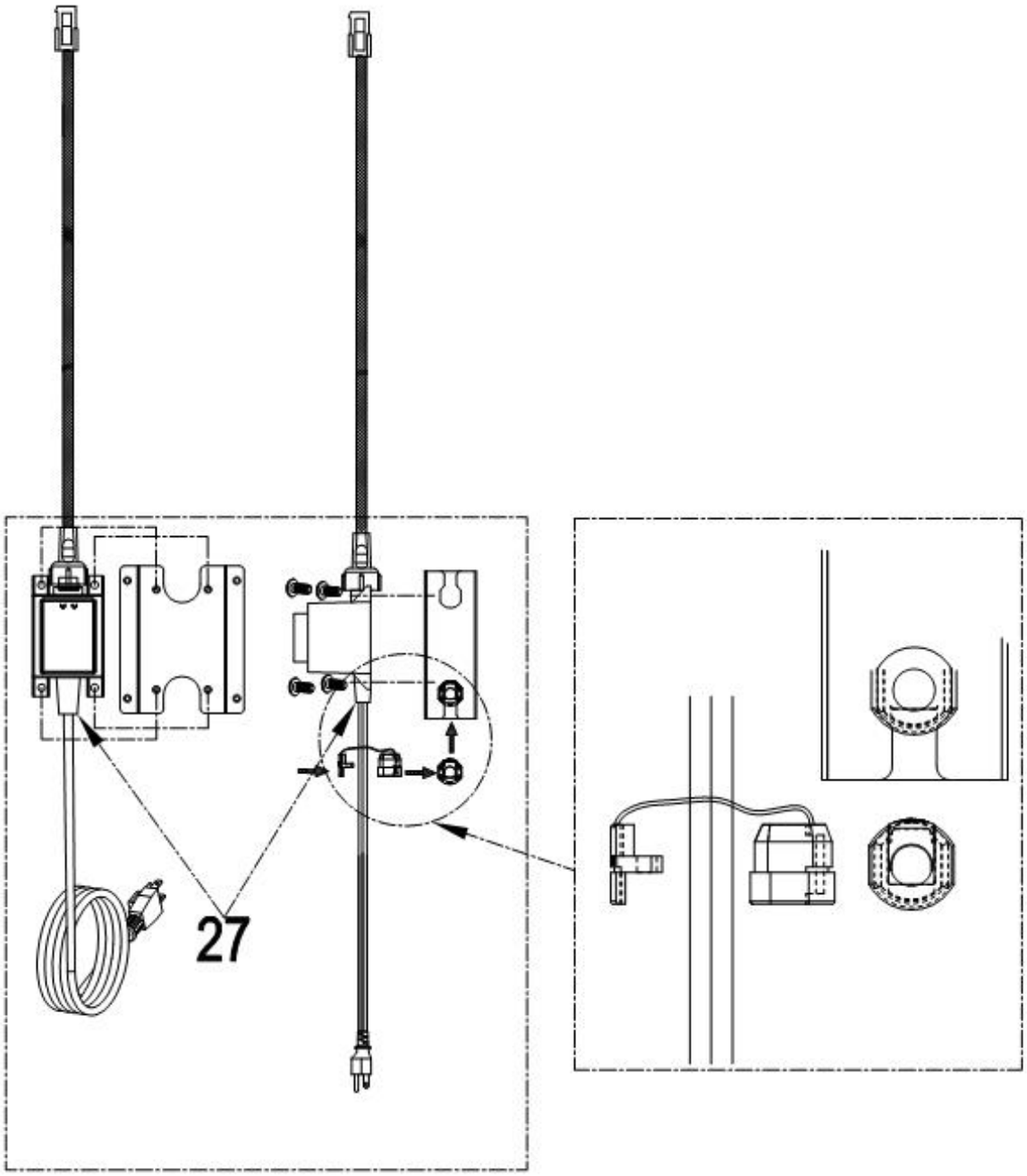

Layout of transformer installation

Step 5

1. Use 3 pcs 1/4“*14 Philips thumb head screw with anti-slip design (Part #71) to install Back panel A welding assembly (Part # 63) to bottom base welding assembly (Part # 49);
2. Use 3 pcs 1/4“*14 Philips thumb head screw with anti-slip design (Part #71) to connect Back panel A welding assembly (Part # 63) with Part # 46 and # 61

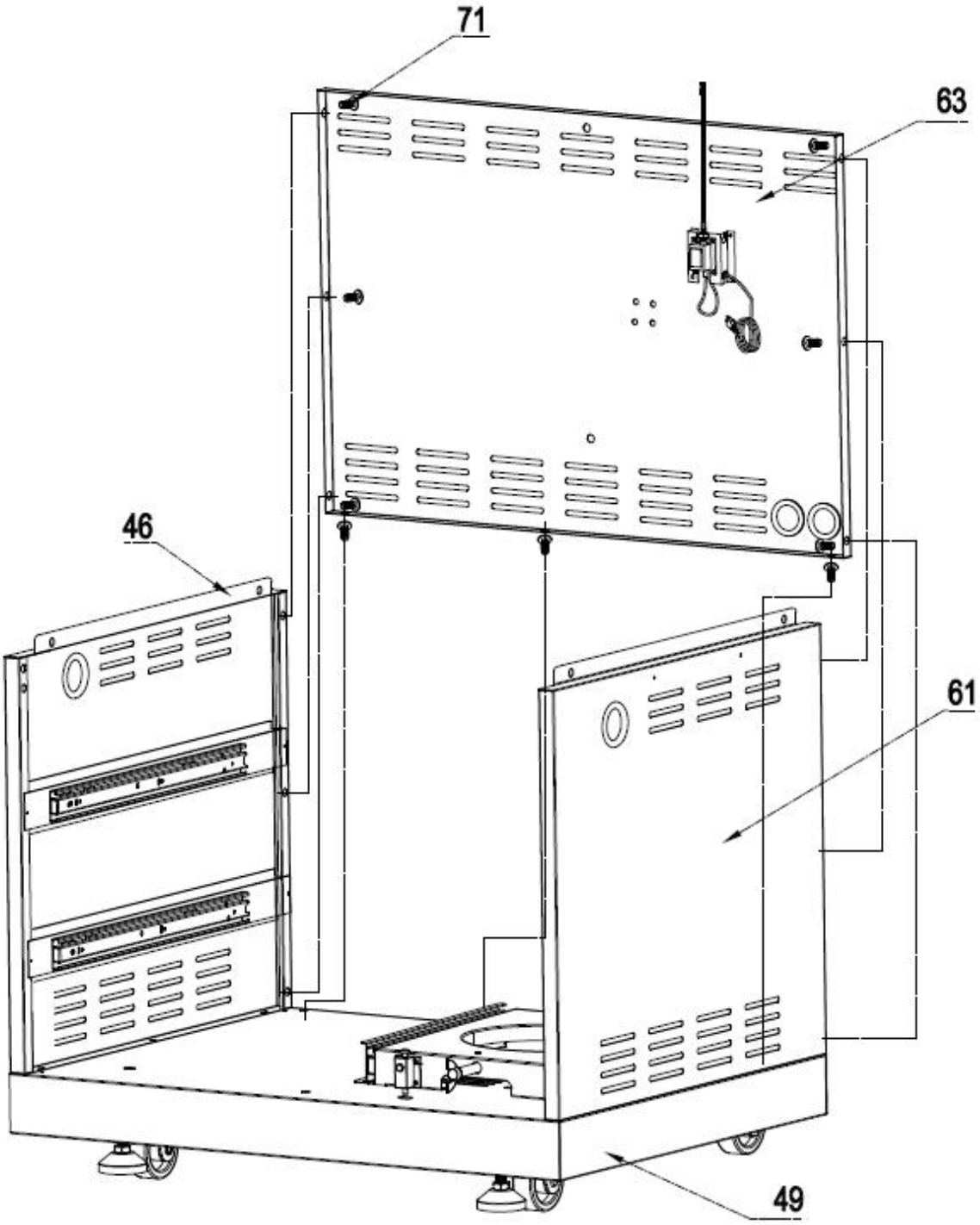

Step 6

1. Use 5 pcs 1/4“*14 Philips thumb head screw with anti-slip design (Part #71) to connect Clapboard welding part (Part # 45) with Part #49 and #63;

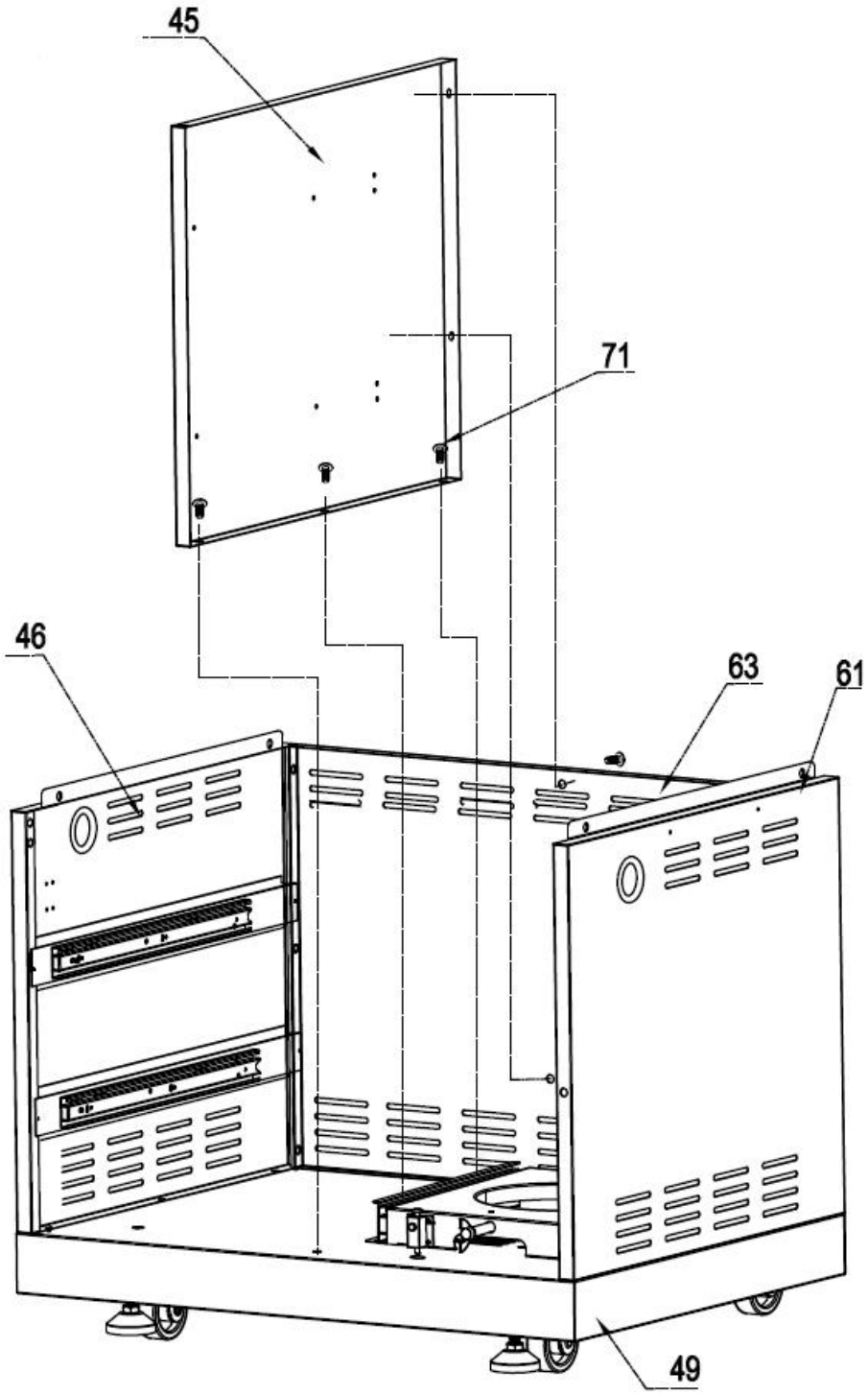

Step 7

1. Use 4 pcs 1/4“*14 Philips thumb head screw with anti-slip design (Part #71) to connect Beam welding assembly (Part # 47) with Part #46 and #61.

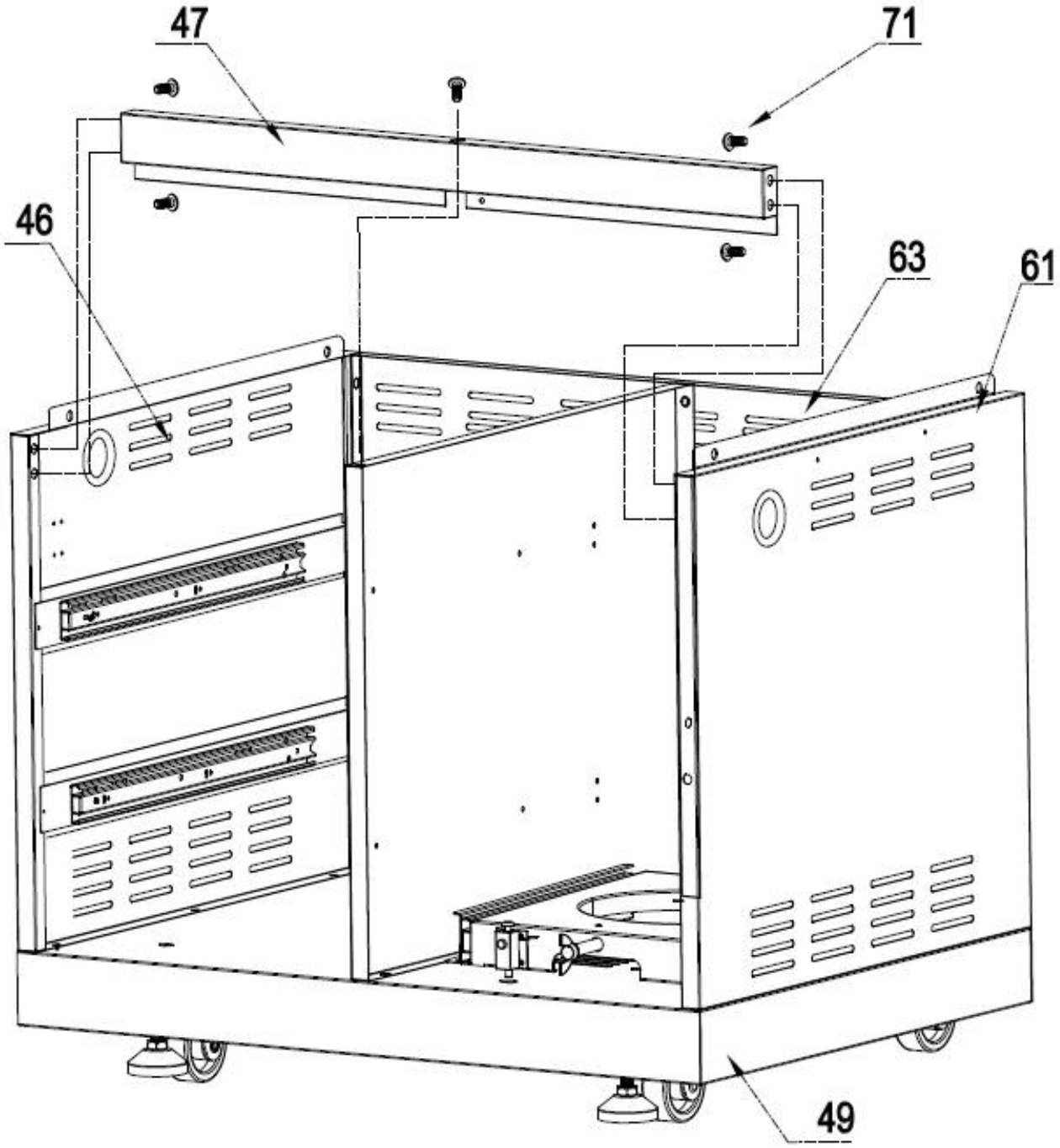

Step 8

1. Check the edge of the middle plate of the drawer assembly (Part #52) and make sure the side with edge is facing up; otherwise you will get to wrong folding direction (see the picture below with wrong folding direction with "×"). Be careful with the folding process.
2. Use 8 pcs 5/32 flat Philip's screw heads (Part # 70) install the bottom plate of drawer assembly (Part# 52.4) to the middle plate (Part# 52.3)
3. Use 8 pcs 5/32 flat Philip's screw heads (Part # 70) install the front plate of drawer (Part# assembly to the middle plate (Part# 52.1 and 52.2)

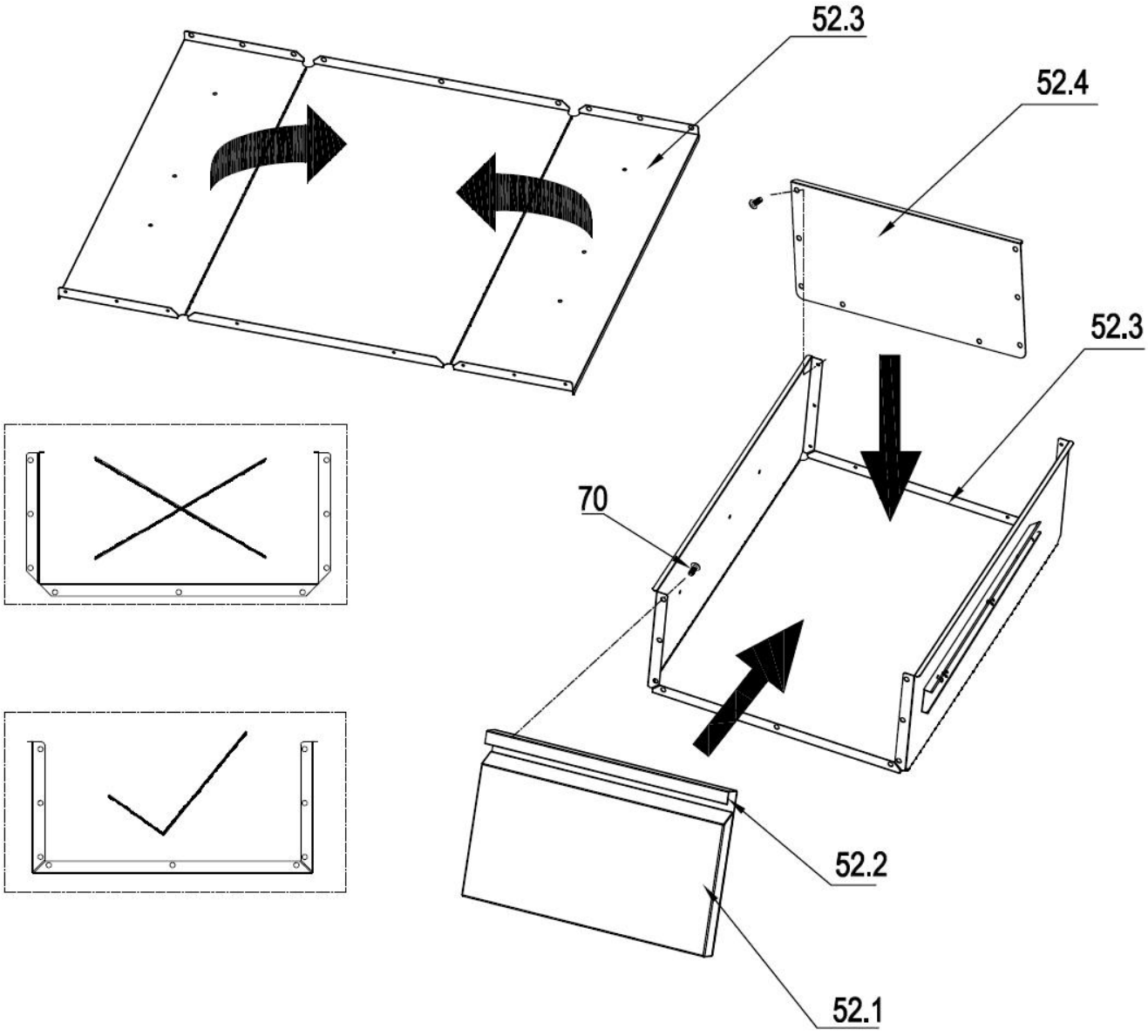

Step 9

1. Insert 2 pcs drawer assemblies (Part #52) into cabinet body;

2. Divide the two parts from door hinge (Part #66) and use 5/32” *8 flat head screw (Part #72) to install them to right side panel (Part #61) and cabinet door (Part #53)

3. Follow the requirement in the picture to install cabinet door (Part # 53)

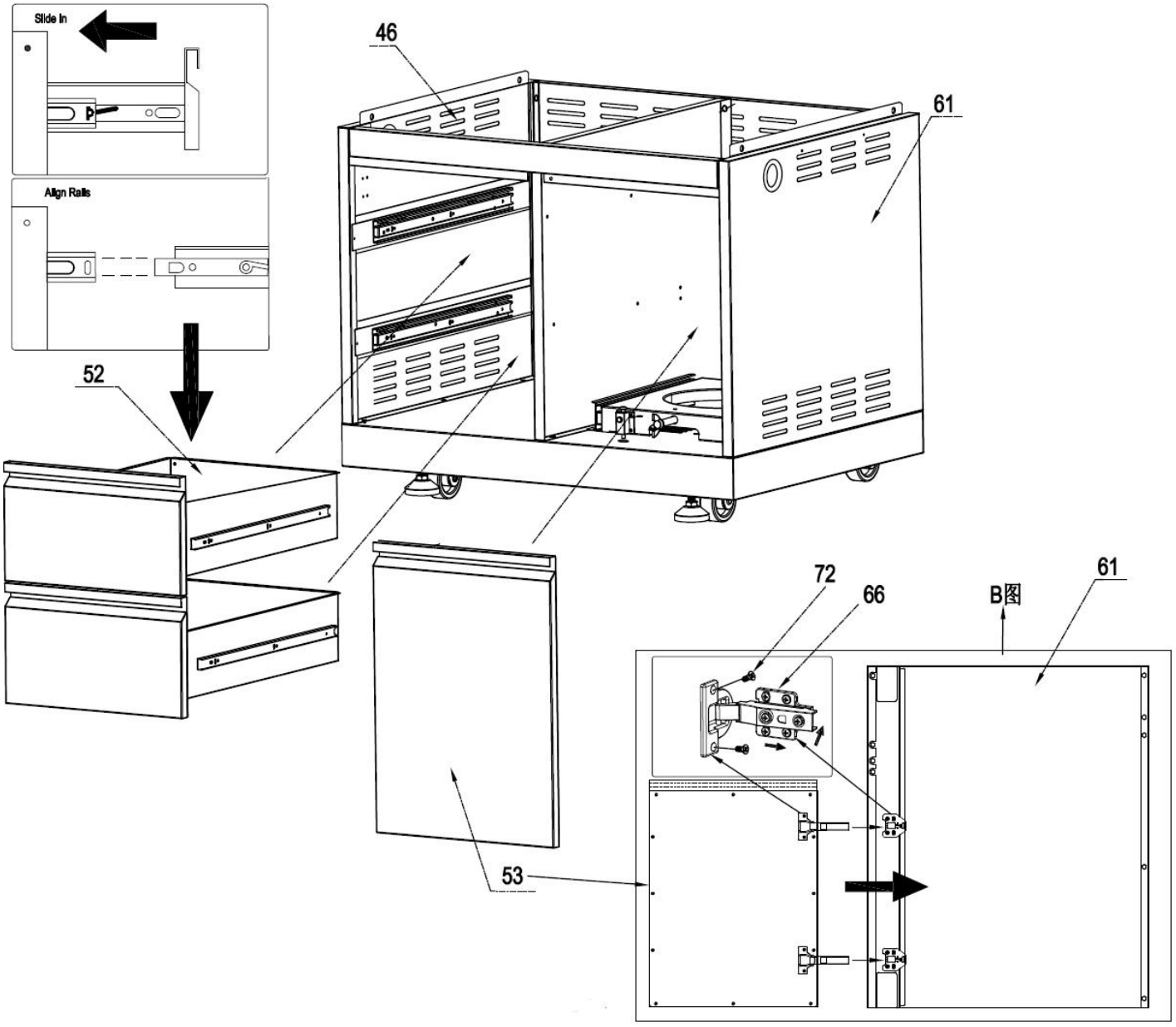

Step. 10

1. Use 2 pcs 5/32" *8 flat head screw (Part # 72) to install laminate board (Part #65) to Left side panel A welding assembly (Part #46);
2. Use 2 pcs 5/32" *8 flat head screw (Part # 72) to install gas tank heat shield (Part #64) to Right side panel A welding assembly (Part #61)
3. Use 2 pcs 1/4“*14 Philips thumb head screw with anti-slip design (Part #71) to install Part #64 and Part #65 to Clapboard welding part (Part #45)

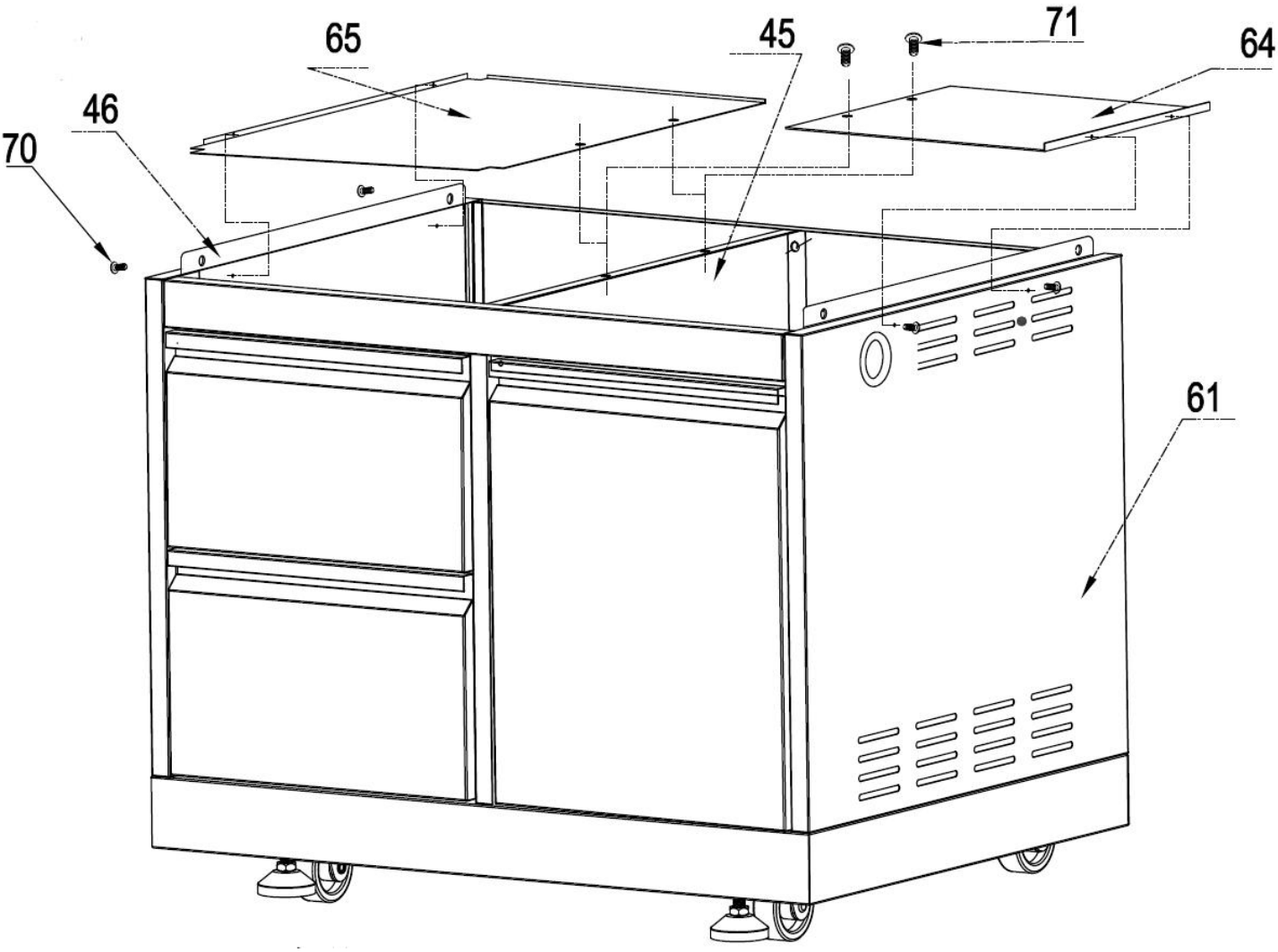

service@thorgroup.us +1 877-288-8099

Outdoor Grill Installation

Step 1

1. Open the Grill cover. Remove All 3 pcs cooking racks (Part # 29) for the main burners to avoid potential damage;

2. Use 2 pcs 1/4“*14 Philips thumb head screw (Part #71) with anti-slip design (Part #71) to install motor holder (Part #12) to Grill cavity (Part #9);

3. Use 2 pcs 1/4“*14 Philips thumb head screw (Part #71) to install Rotisserie holder (Part #32) to Grill cavity (Part #9);

4. Put Motor (Part #11) on top of motor support (Part #12) and put back 3 pcs cooking racks (Part #29)

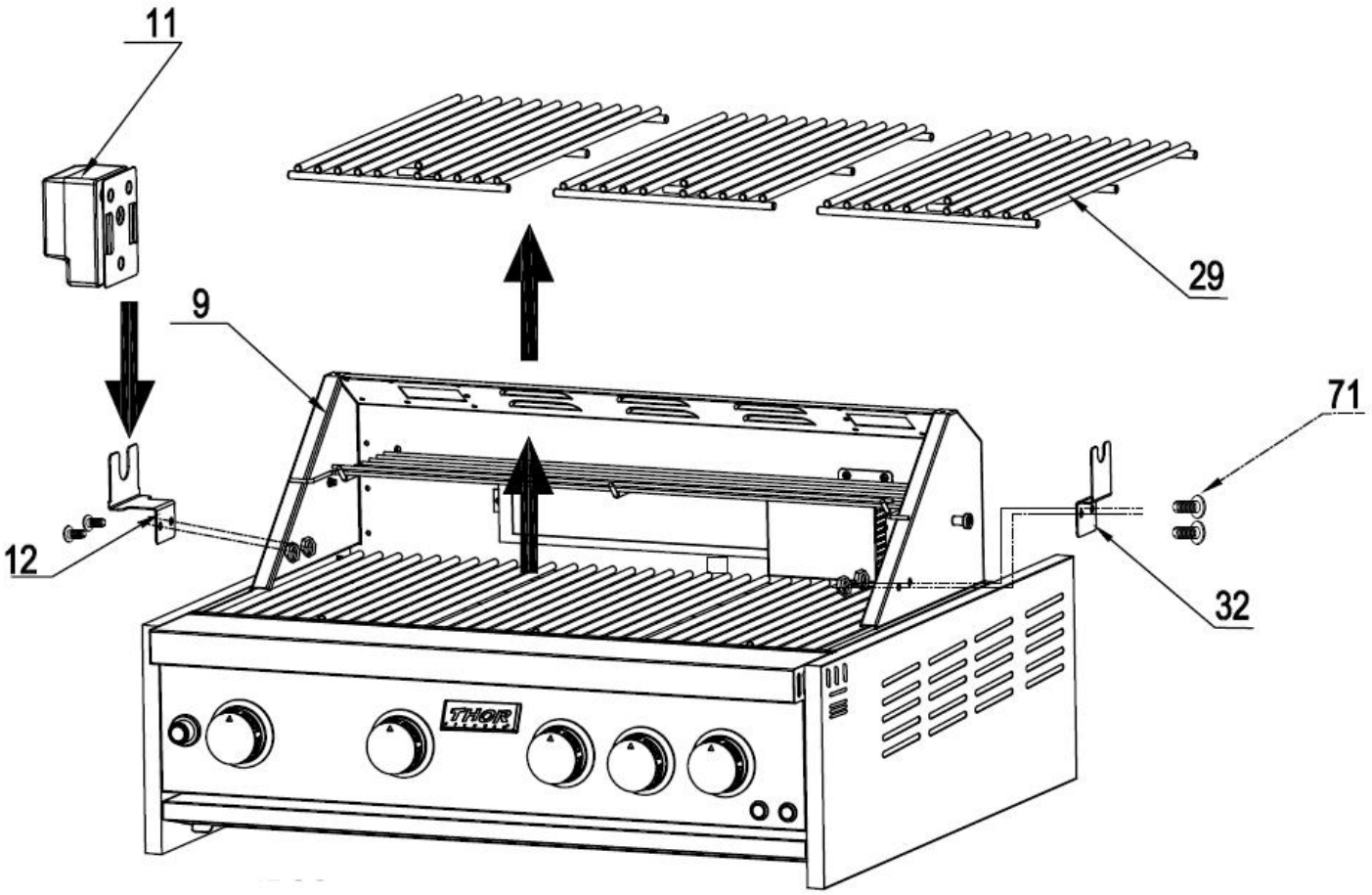

Step 2

1. Put Motor (Part #11) on top of motor support (Part #12) and insert sharp side of Rotisserie (Part #8) to motor (Part #11), and the other side on top of Rotisserie holder (Part # 32)

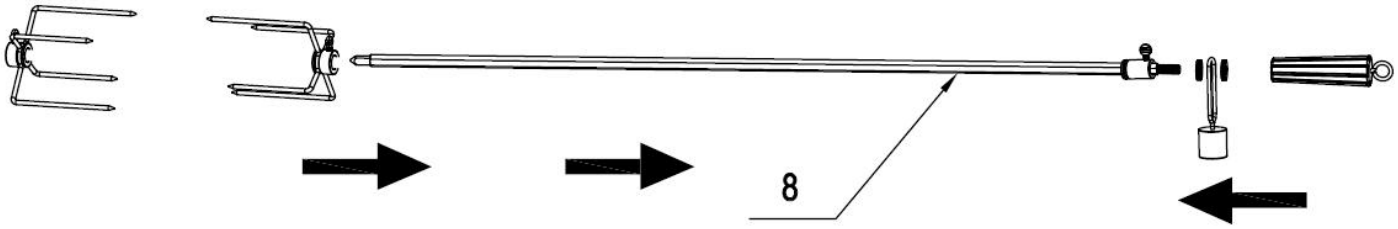

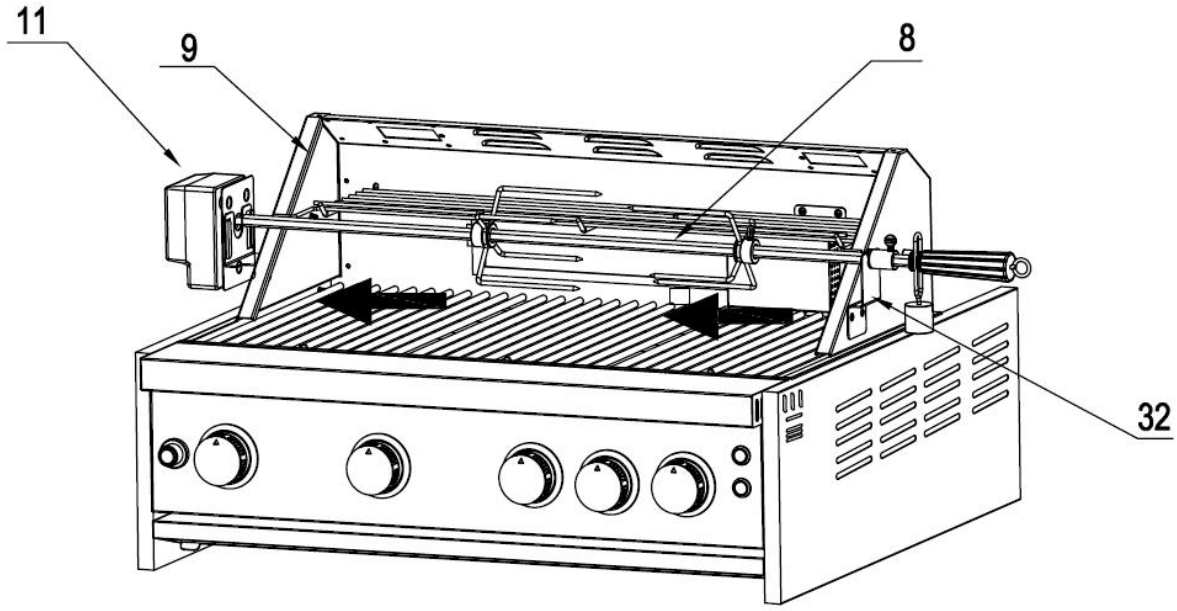

Step 3

1. Use 2 pcs 1/4“*14 Philips thumb head screw with anti-slip design (Part #71) to Connect Grill body with Cabinet body (For Gas Leak Test, please refer to Use Manual)

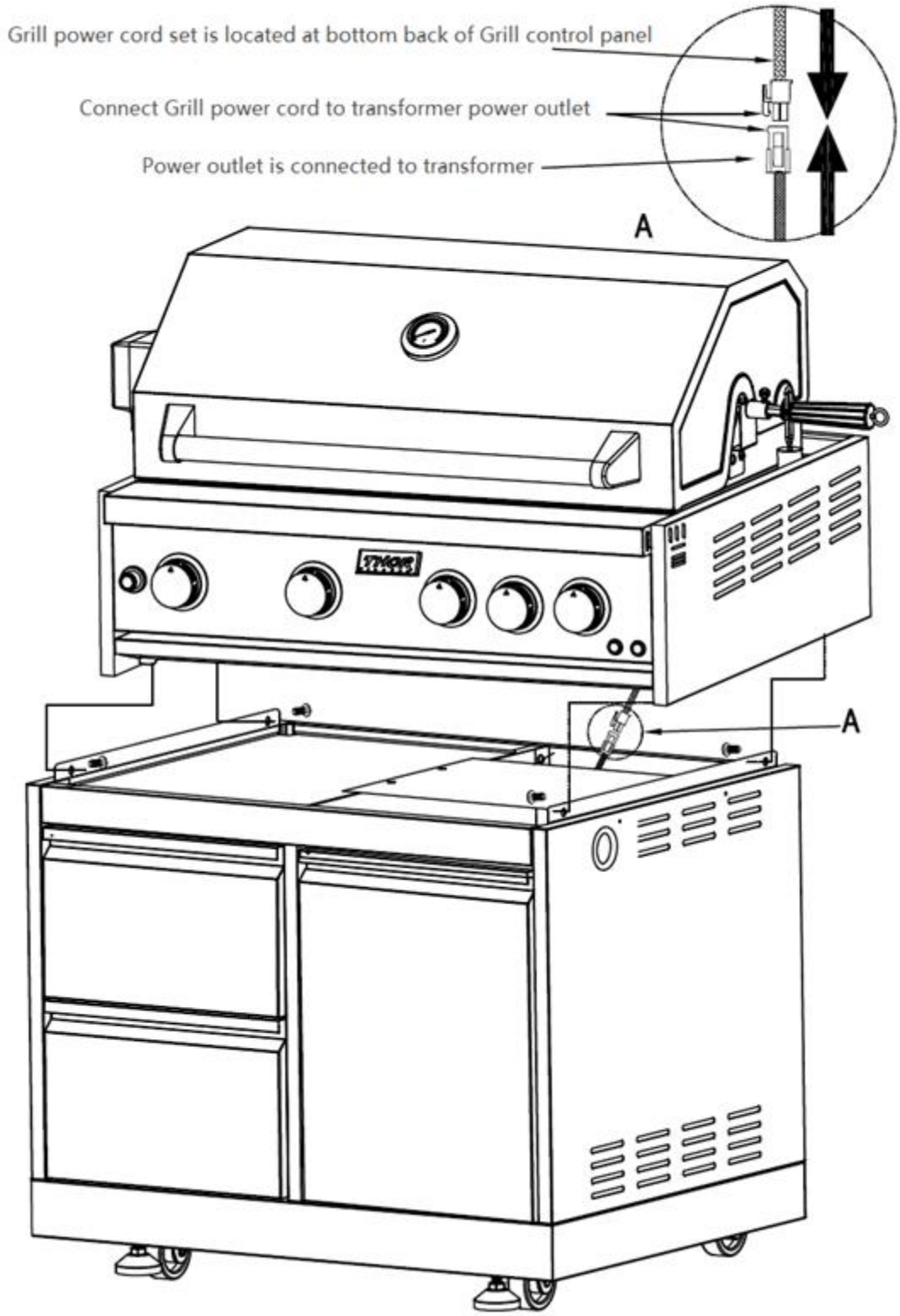

service@thorgroup.us +1 877-288-8099

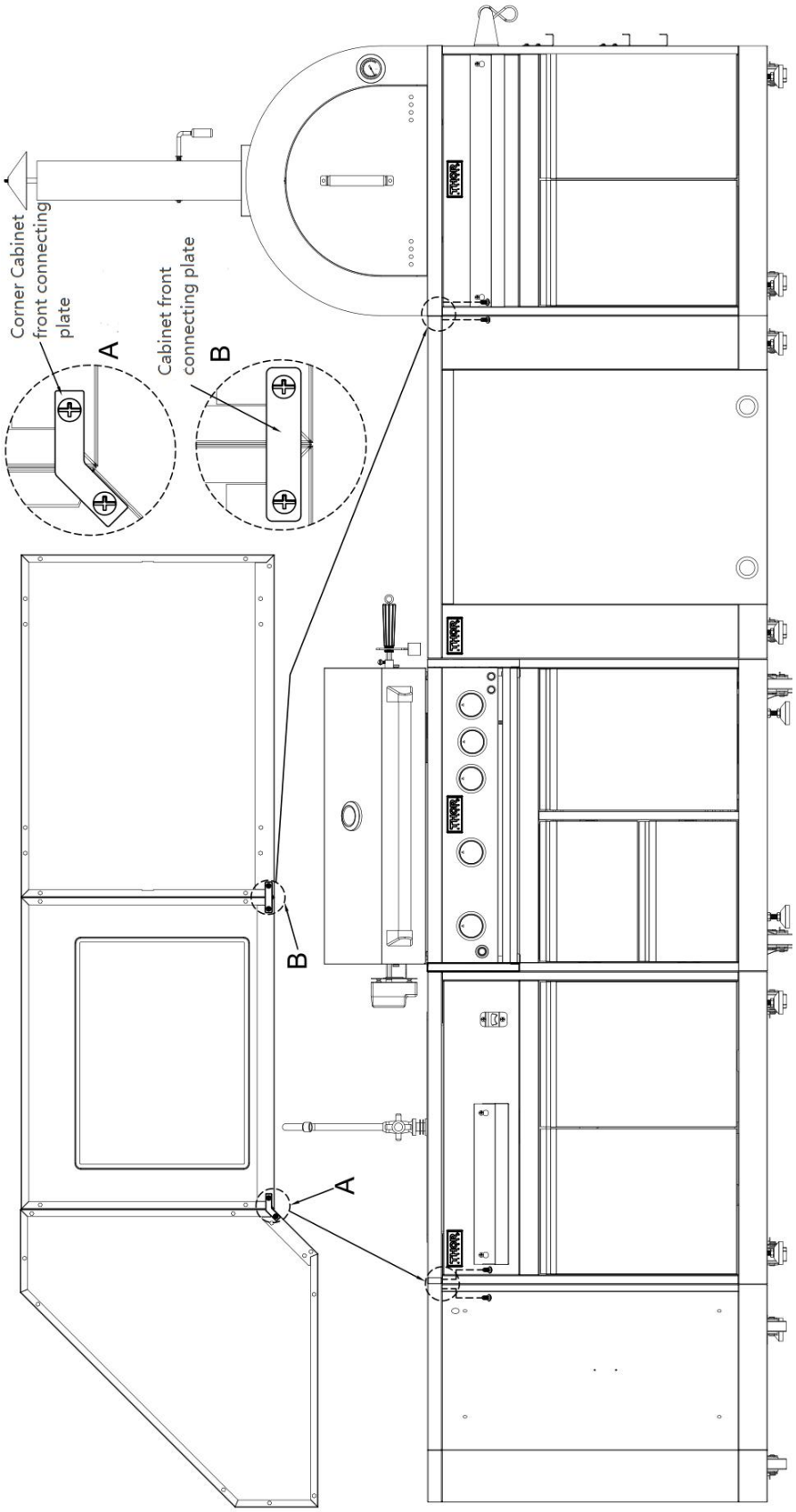

You Thor Kitchen Outdoor Cabinet could be connected with any other Thor Kitchen Our Door Cabinet models.

If you are having a Corner Cabinet and you would like to connect it to another cabinet, use corner cabinet connecting plate with 2 pcs ¼" screws (Part # 06.02.00093-000-A0) to connect both cabinets;

If you are having a Sink Cabinet, Appliance Cabinet or Pizza oven Cabinet, use cabinet connecting plate with 2 pcs ¼" screws to connect both cabinets.

service@thorgroup.us +1 877-288-8099

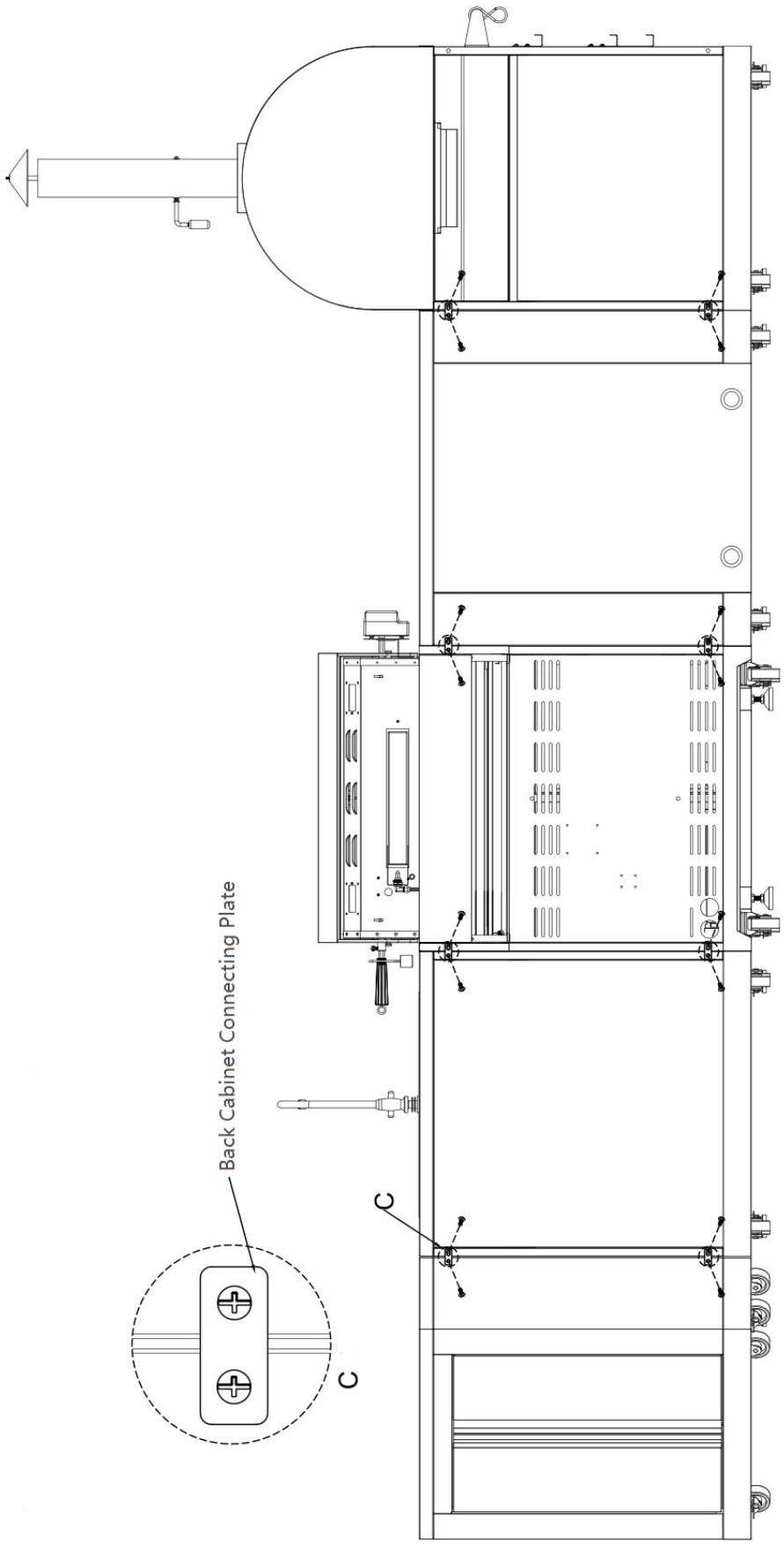

You Thor Kitchen Outdoor Cabinet could be connected with any other Thor Kitchen Our Door Cabinet models.

For Back Panel Connections, use Back Cabinet connecting plate with 2 pcs ¼" screws (Part # 06.02.00093-000-A0) to connect both Cabinets.

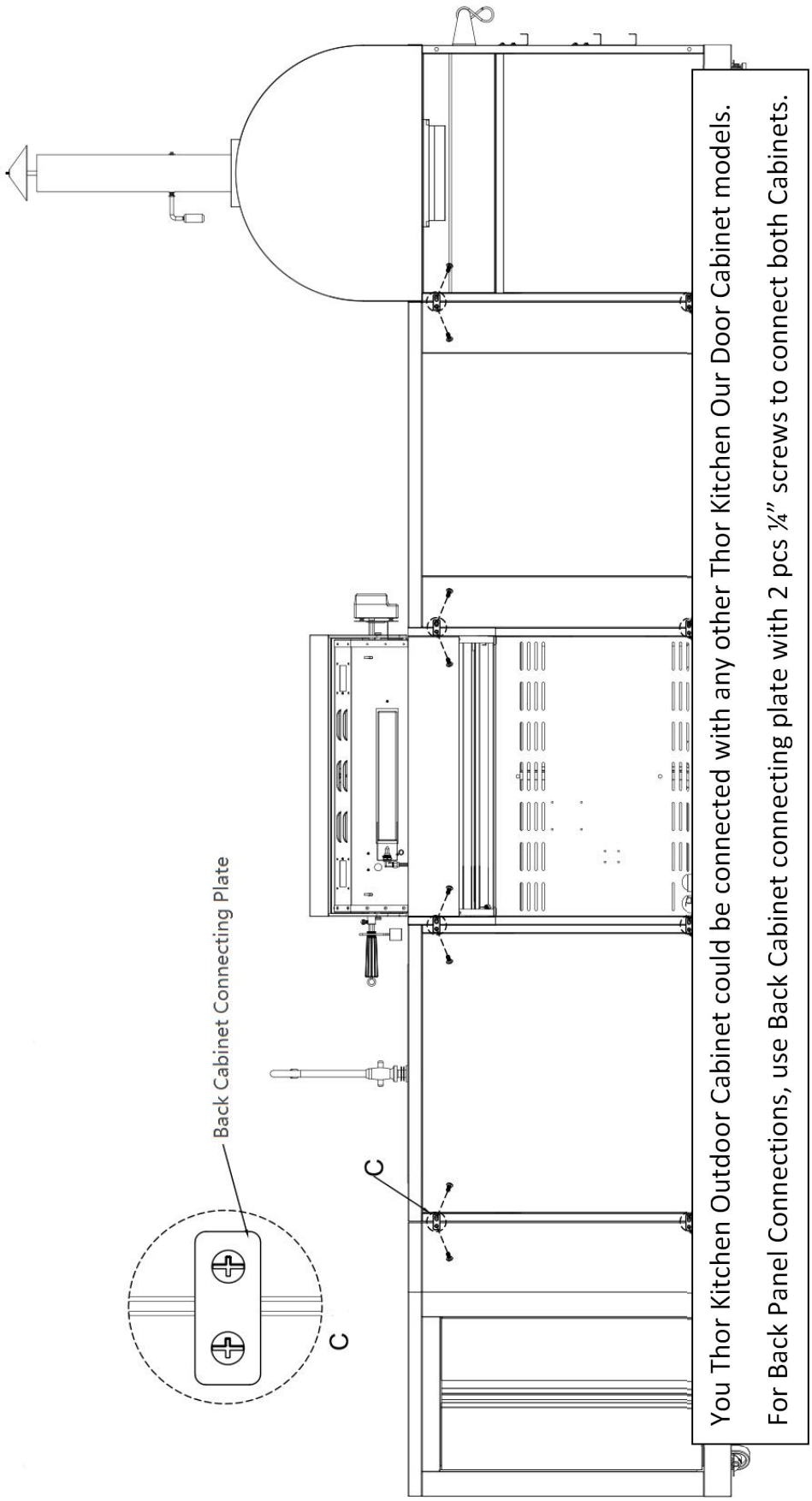

You Thor Kitchen Outdoor Cabinet could be connected with any other Thor Kitchen Our Door Cabinet models.

For Back Panel Connections, use Back Cabinet connecting plate with 2 pcs ¼" screws to connect both Cabinets.

service@thorgroup.us +1 877-288-8099

THOR KITCHEN OUTDOOR Sink Cabinet Installation Manual

MODEL# MK01SS304

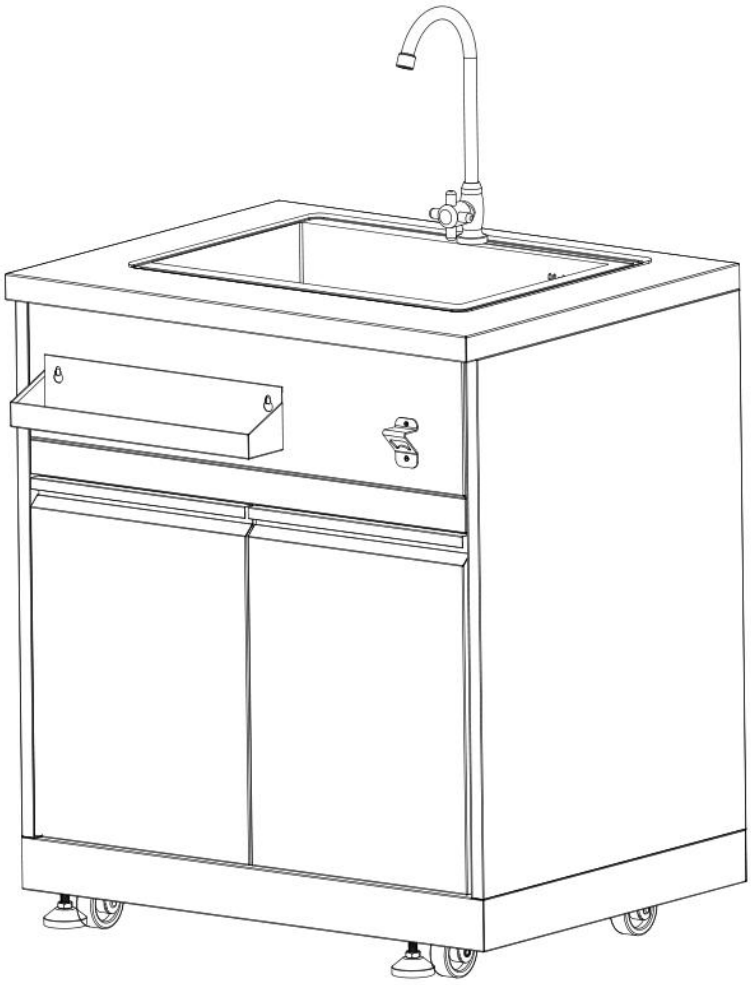

IMPORTANT:

Save for electrical inspector's use.
Installer: Leave installation instructions with the homeowner.
Homeowner: Keep installation instructions for future reference.

Welcome

Thank you for purchasing your Thor Kitchen Appliance! We appreciate your business and we recommend that you read this entire User's Manual before operating your new appliance for the first time.

This manual contains instructions on how to properly install and set up your new range, as well as insights into the unique features that our product offers. Please keep this manual for future reference, as it contains answers to questions that you might have as you begin to cook.

For any inquiries, please reach our customer service support at +1 877-288-8099 at our business hours or email service@thorgroup.us.

Thank you,

Thor Group

This manual applies to the following models' series:

Model # MK01SS304 (Outdoor Sink Cabinet)

service@thorgroup.us +1 877-288-8099

Parts Explosive Pictures

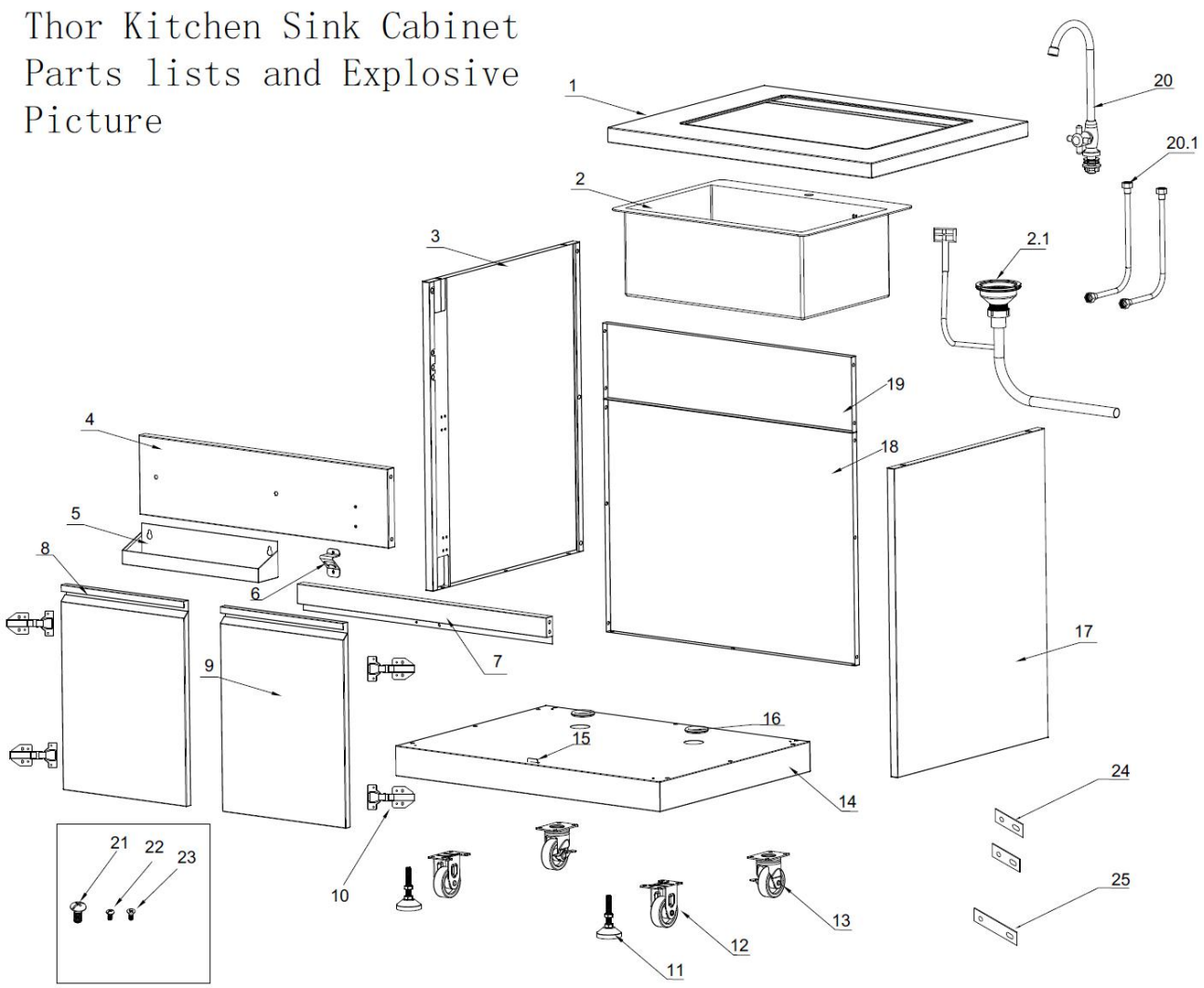

Parts List

If you are missing any part, please contact Thor Kitchen Customer Service Department at 877-288-8099 at business hours, or email service@thorgroup.us for help.

Explosive #	Part #	Part Name	Quantity
1	20.01.008067-000-A0	Countertop welding assembly	1
2	05.99.008008-000-A1	Water sink	1
2.1	05.19.008004-000-A0	Drainpipe with anti-overflow	1
3	20.01.008089-000-A00	Left side panel welding assembly	1
4	20.01.001038-000-A0	Decoration panel welding assembly	1
5	20.01.001044-000-A0	Condiment holder welding assembly	1
6	04.01.008033-000-A0	Bottle opener	1
7	20.01.001040-000-A1	Beam welding assembly	1
8	22.99.009182-000-A0	Left door welding assembly	1
9	22.99.009181-000-A0	Right door welding assembly	1
10	05.03.008001-000-A0	Door hinge	4
11	05.01.008004-000-A0	Supporting leg	2
12	05.10.000122-000-A0	Fixed caster	2
13	05.10.000123-000-A0	Universal caster with brake	2
14	20.01.008069-000-A0	Bottom panel welding assembly	1
15	04.01.002596-000-A1	Door barrier strip	1
16	06.08.008078-000-A0	Gasket	2
17	20.01.008088-000-A0	Right side panel welding assembly	1
18	20.01.001042-000-A0	Back panel welding assembly A	1
19	20.01.008091-000-A0	Back panel welding assembly B	1
20	05.99.008009-000-A0	Faucet	1
20.1	05.19.008005-000-A0	Faucet inlet pipe	2
21	06.02.000093-000-A0	¼” Philips thumb head screw with anti-slip design	52
22	06.10.000042-000-A0	Philips thumb head screw	4
23	06.11.008056-000-A0	flat head screw	26
24	04.01.002580-000-A0	cabinet back connecting plate	2
25	04.01.002579-000-A0	cabinet front connecting plate	1

service@thorgroup.us +1 877-288-8099

Product Dimension

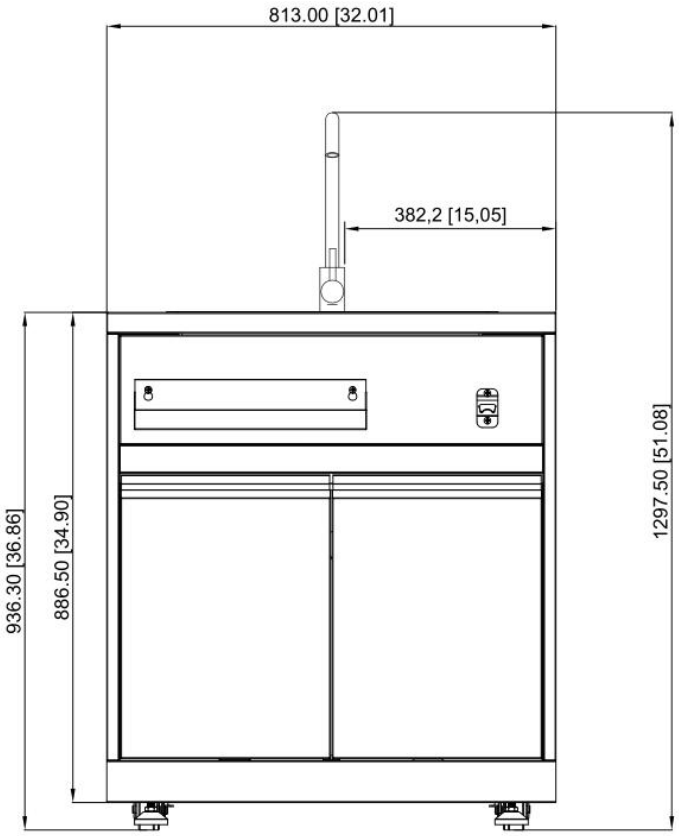

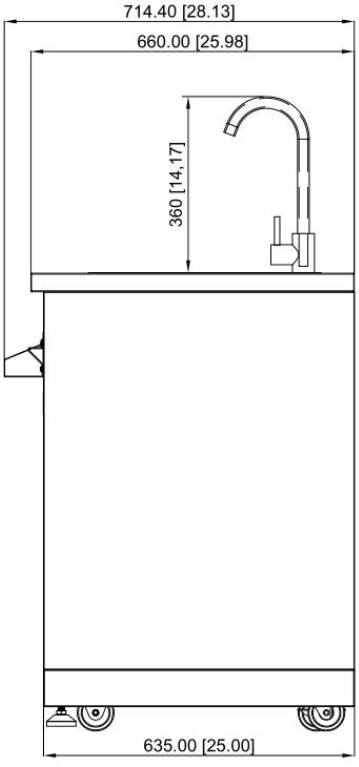

Cabinet Installation

Step 1

1. Connect 2 pcs supporting leg (Part # 11) to bottom welding part, and tighten two legs;
2. Connect 2 pcs Fixed caster (Part # 12) and 2 pcs universal caster with brake (Part # 13) with 16 pcs ¼" Philips thumb head screw with anti-slip design (Part # 21) to bottom welding part (Part # 14)

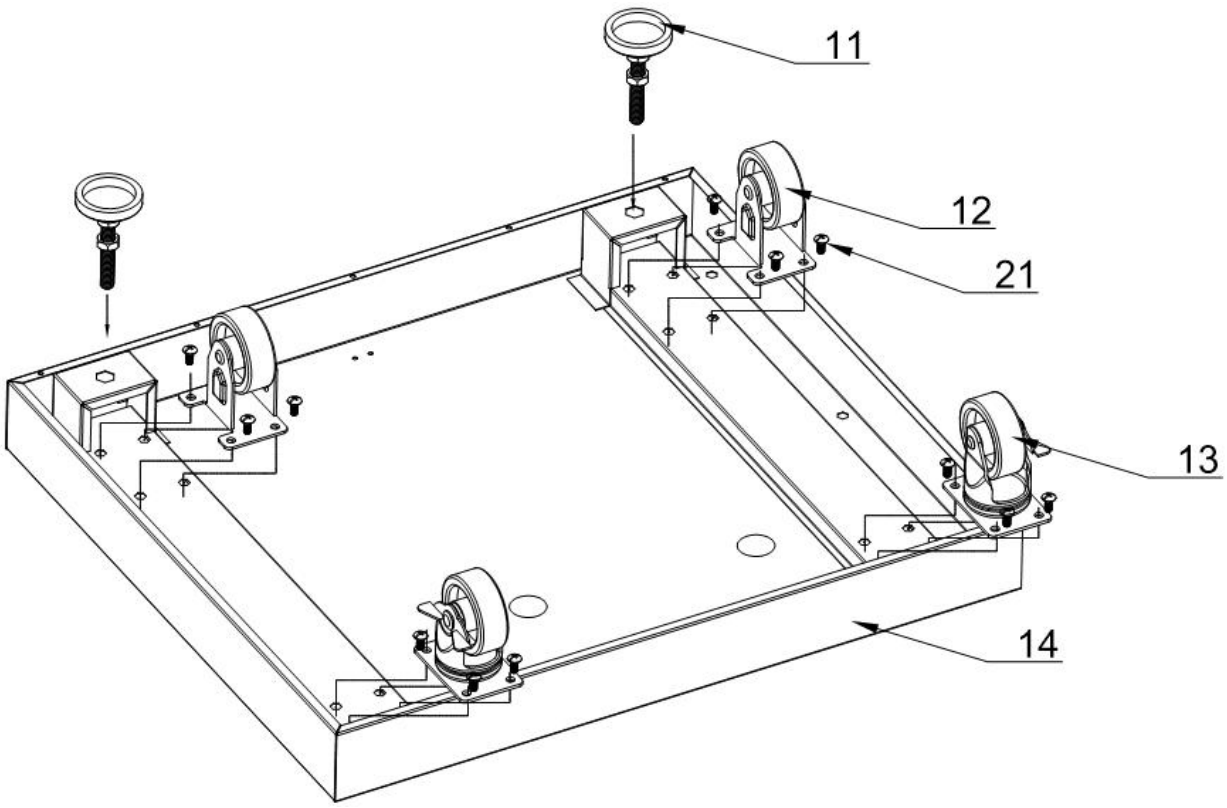

Step 2

1. Reverse back Bottom panel welding assembly (Part # 14). Install 2 pcs Gasket (Part # 16) to Part # 14, and then use 2 pcs Philips thumb head screw (Part # 22) to install Door barrier strip (Part # 15) to Part # 14;
2. Use 3 pcs ¼" Philips thumb head screw with anti-slip design (Part # 21) to tighten Left side panel welding assembly (Part # 3) to Part # 14;
3. Use 3 pcs Part # 21 to tighten Right side panel welding assembly (Part # 17) to Part #14;
4. Use 13 pcs Part # 21 to tighten Back panel welding assembly A (Part # 18) and Back panel welding assembly B (Part # 19) with Part #13, #3 and #17.
5. Do not over-tighten all the screws until parts are lined up.

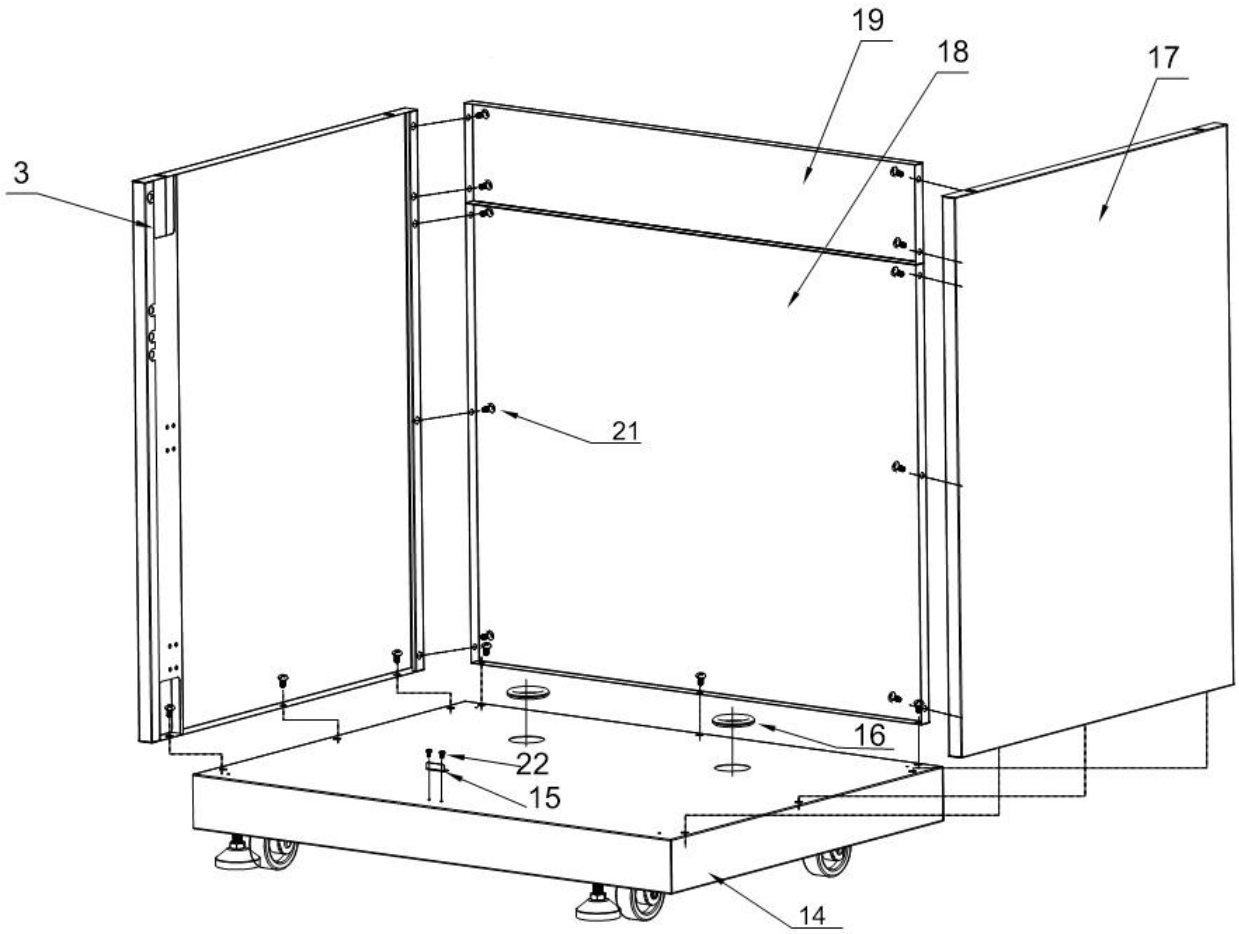

6.

Step 3

1. Use 4 pcs Part # 21 to connect Beam welding assembly (Part # 7) with Part #3 and #17;
2. Use 4 Part # 21 to connect Decoration panel welding assembly (Part # 4) with Part #3 and #17;
3. Do not over-tighten all the screws until parts are lined up.

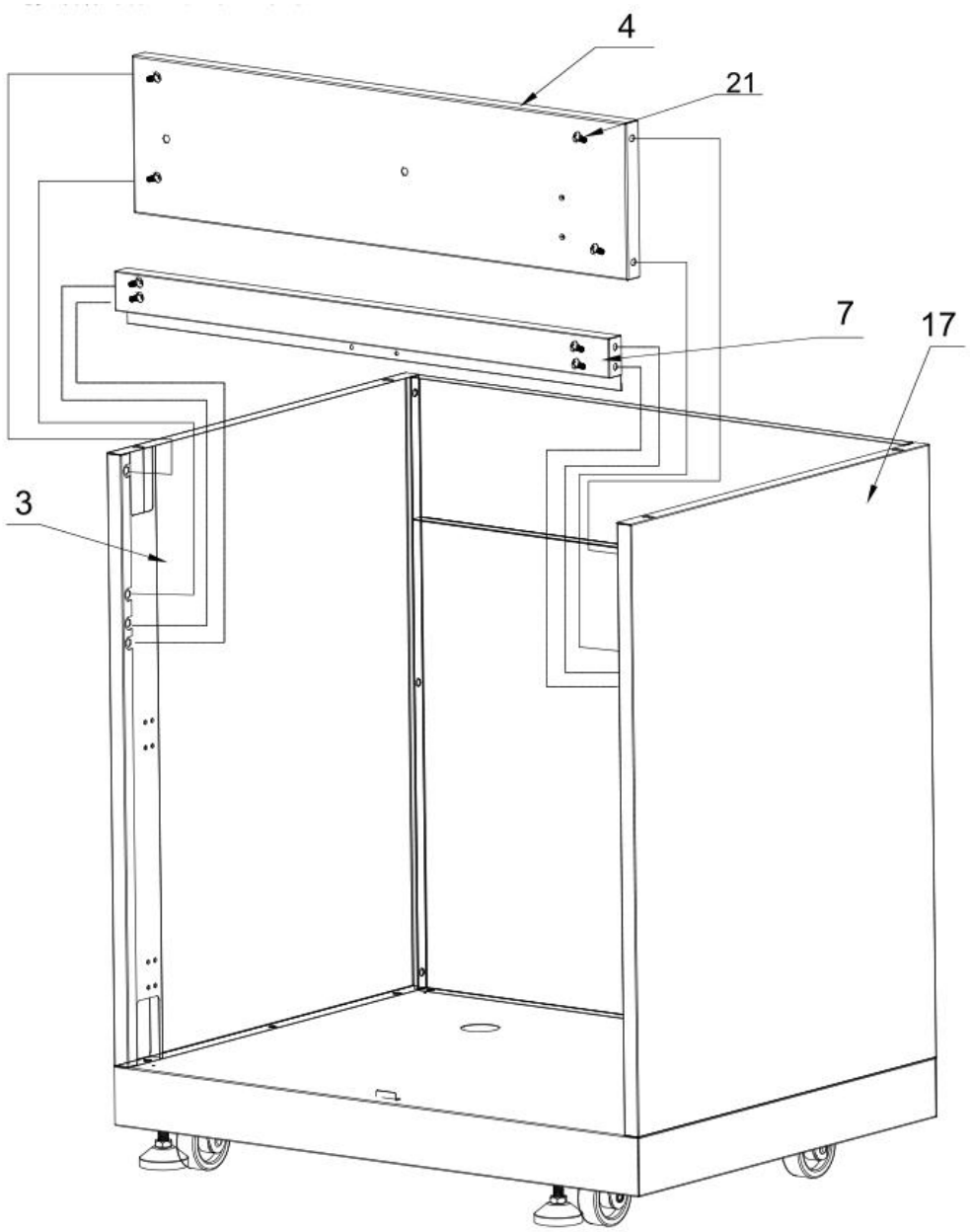

Step 4

1. Use 2 pcs Part # 21 to connect Condiment holder welding assembly (Part # 5) with Part #4;
2. Use 2 pcs Philips thumb head screw (Part # 22) to connect bottle opener (Part # 6) with Part #4;
3. Use 24 pcs flat head screw (Part # 23, Showing in Picture “B”) to install 4 pcs Door hinge with Part # 3, Left door welding assembly (Part # 8), Right door welding assembly (Part # 9) and Right-side panel welding assembly (Part # 17).
4. Install Part # 8 to Part # 3 and install Part # 9 to Part # 17. Do not over-tighten all the screws until parts are lined up.

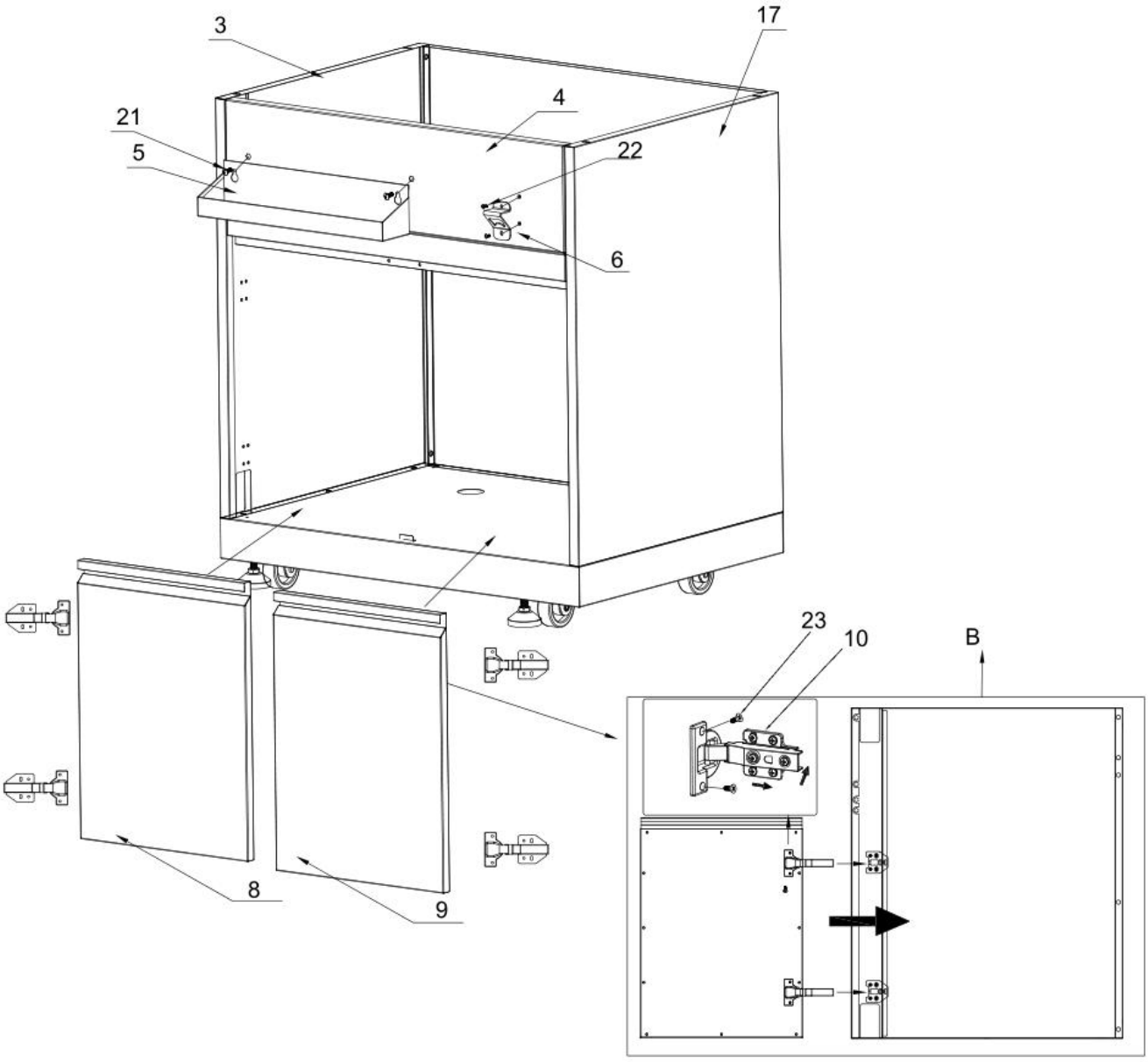

Step 5

1. Use 4 pcs Part # 21 to install Countertop welding assembly with Part # 3 and # 17, making sure the connection is smooth.

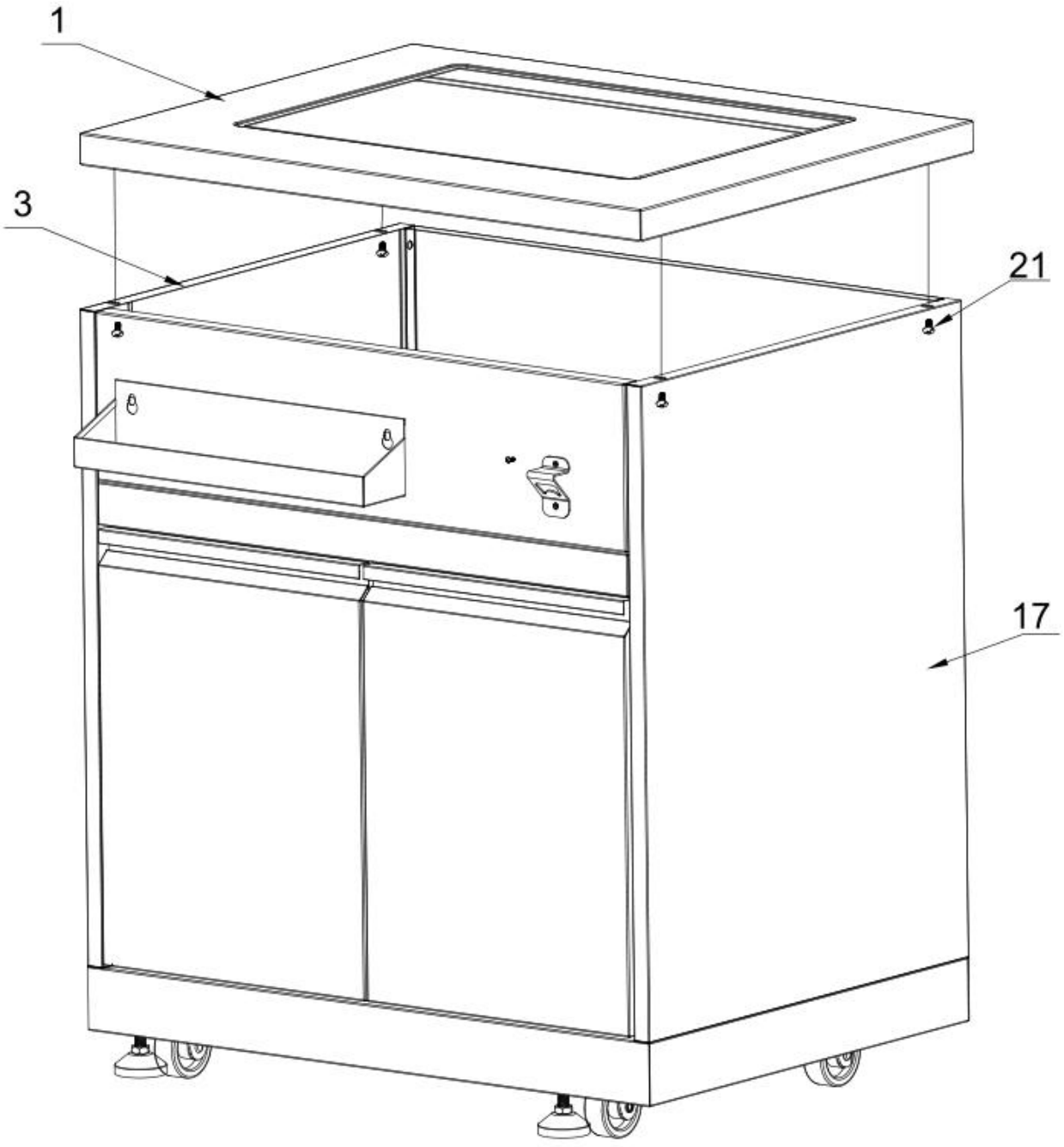

Step 6

The Product without faucet and water pipe will be looking like below picture.

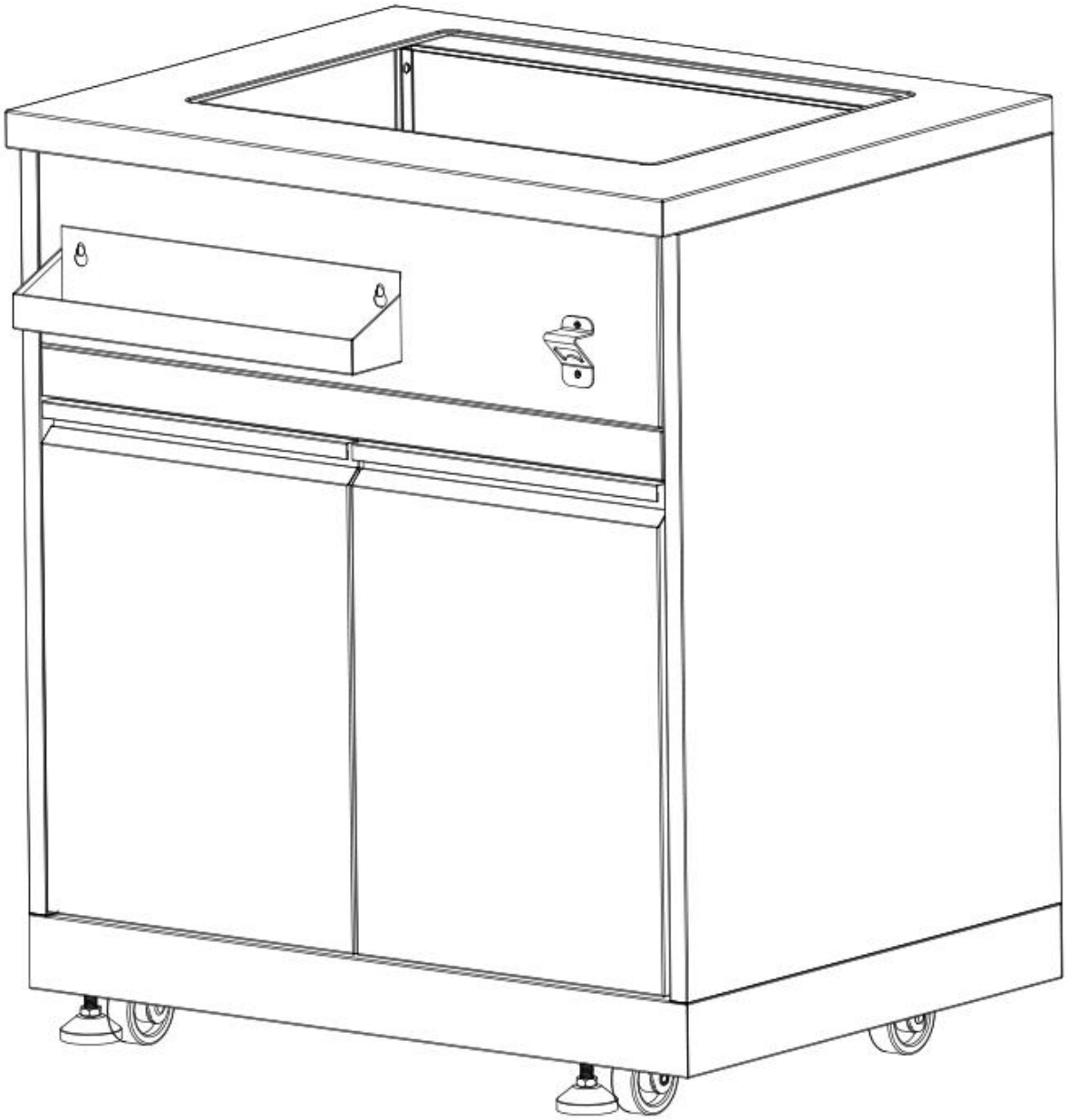

Step 7

1. Install Faucet (Part # 20) to Water sink (Part # 2), then put 2 pcs water inlet pipe (part of # 18) into the bottom of Part # 20;
2. Put Drain pipe with anti-overflow (Part # 2.1) to the bottom of Part # 2, then use specialized screw 3/16" screw within Part # 2.1 to lock Anti-overflow connector (already installed from the manufacturer), connect anti-flow connector to the side of drain pipe;
3. Take out 3M double sided tape from the edge of the water sink.

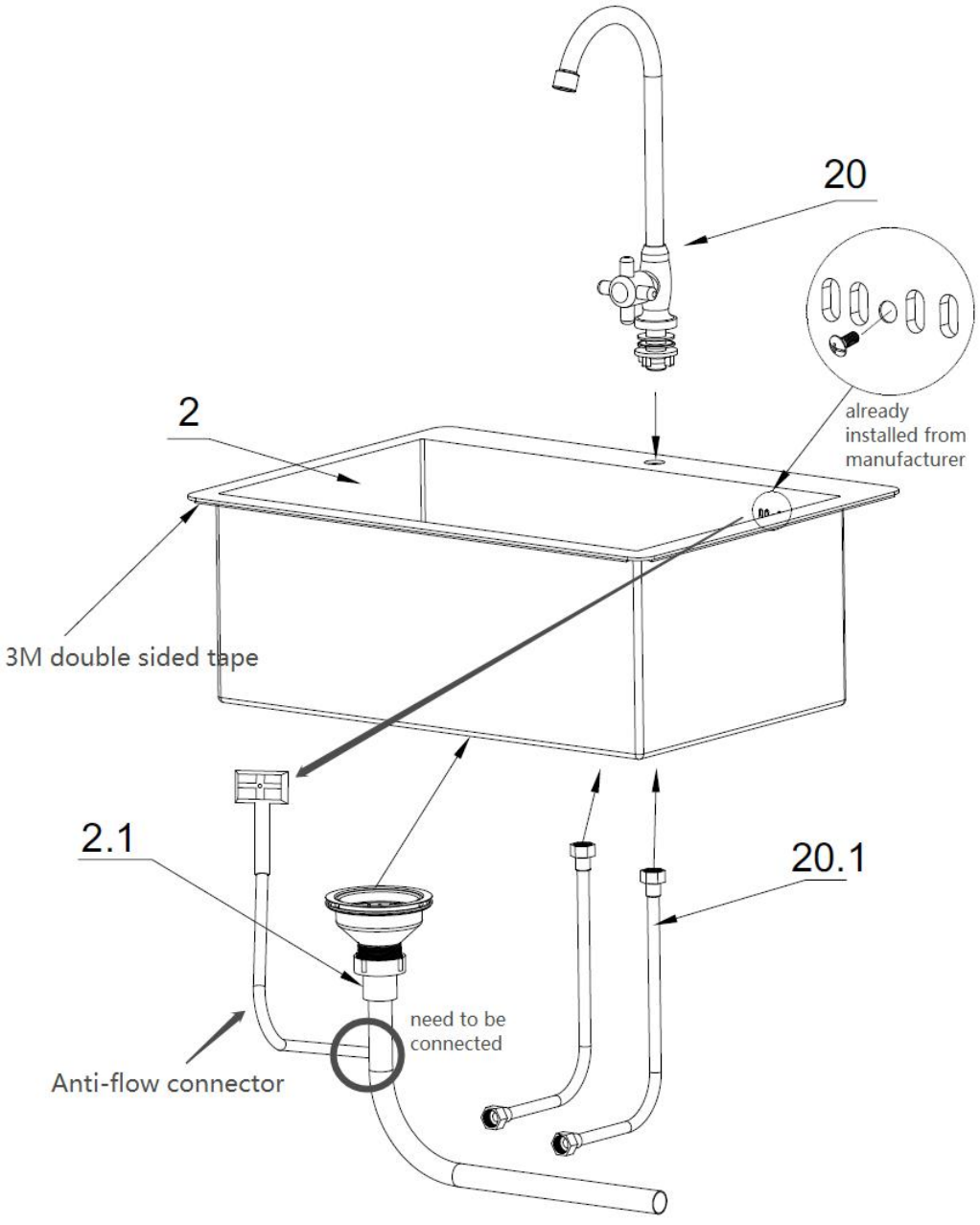

4. For detailed installation information of faucet, see below picture.

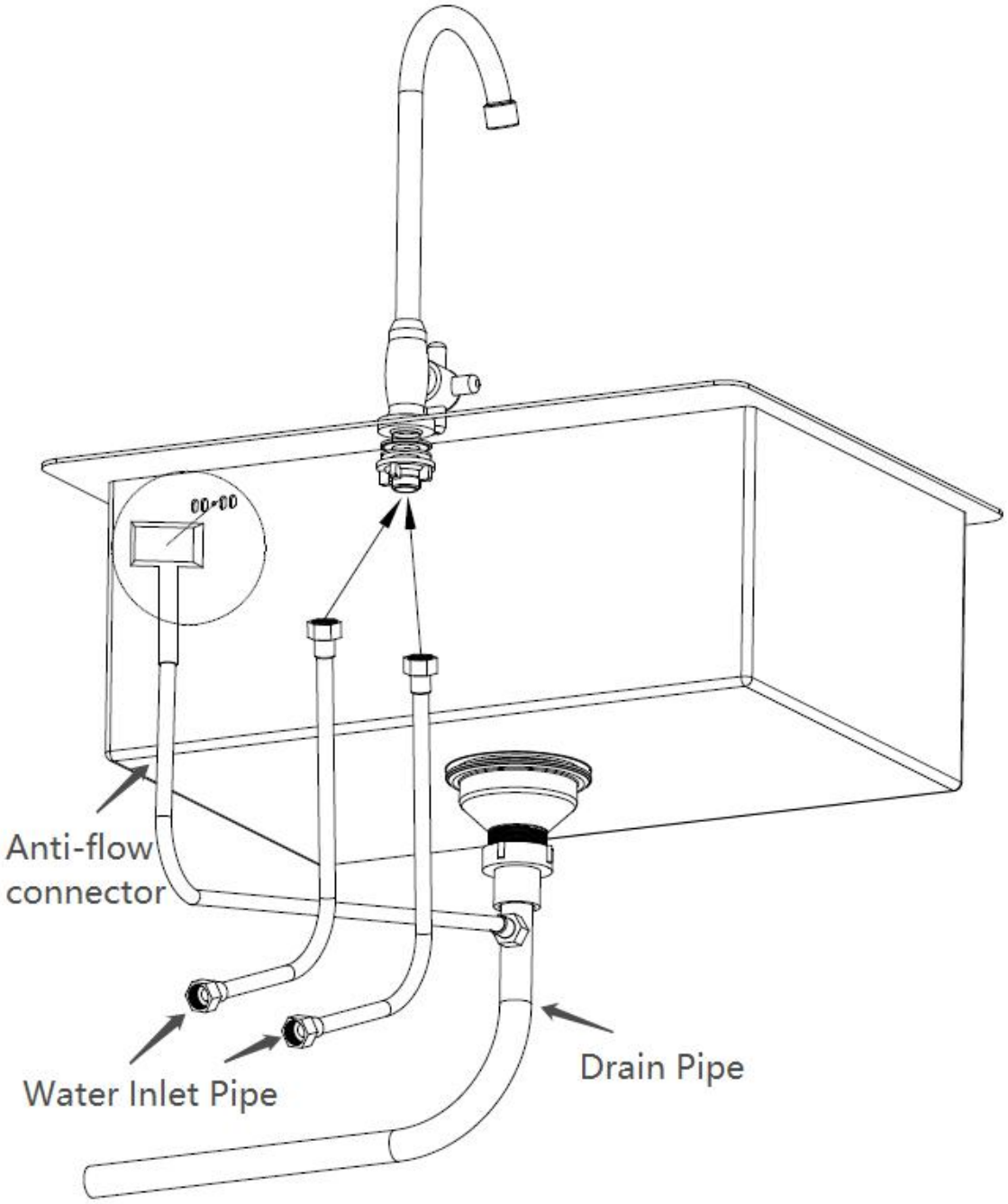

Step 8

1. Put Part # 2 on top of Part # 1 and make sure the connection is tight.

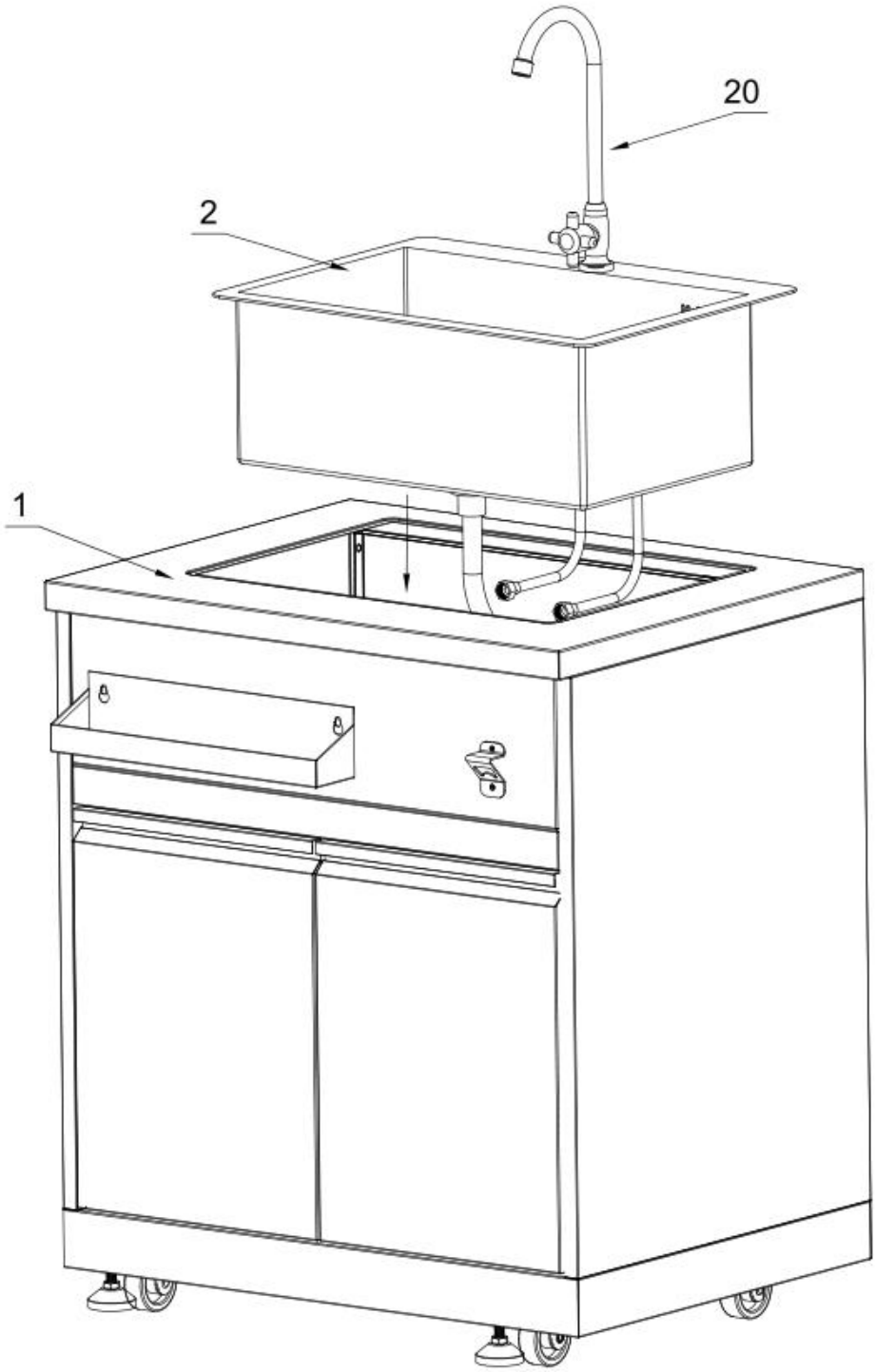

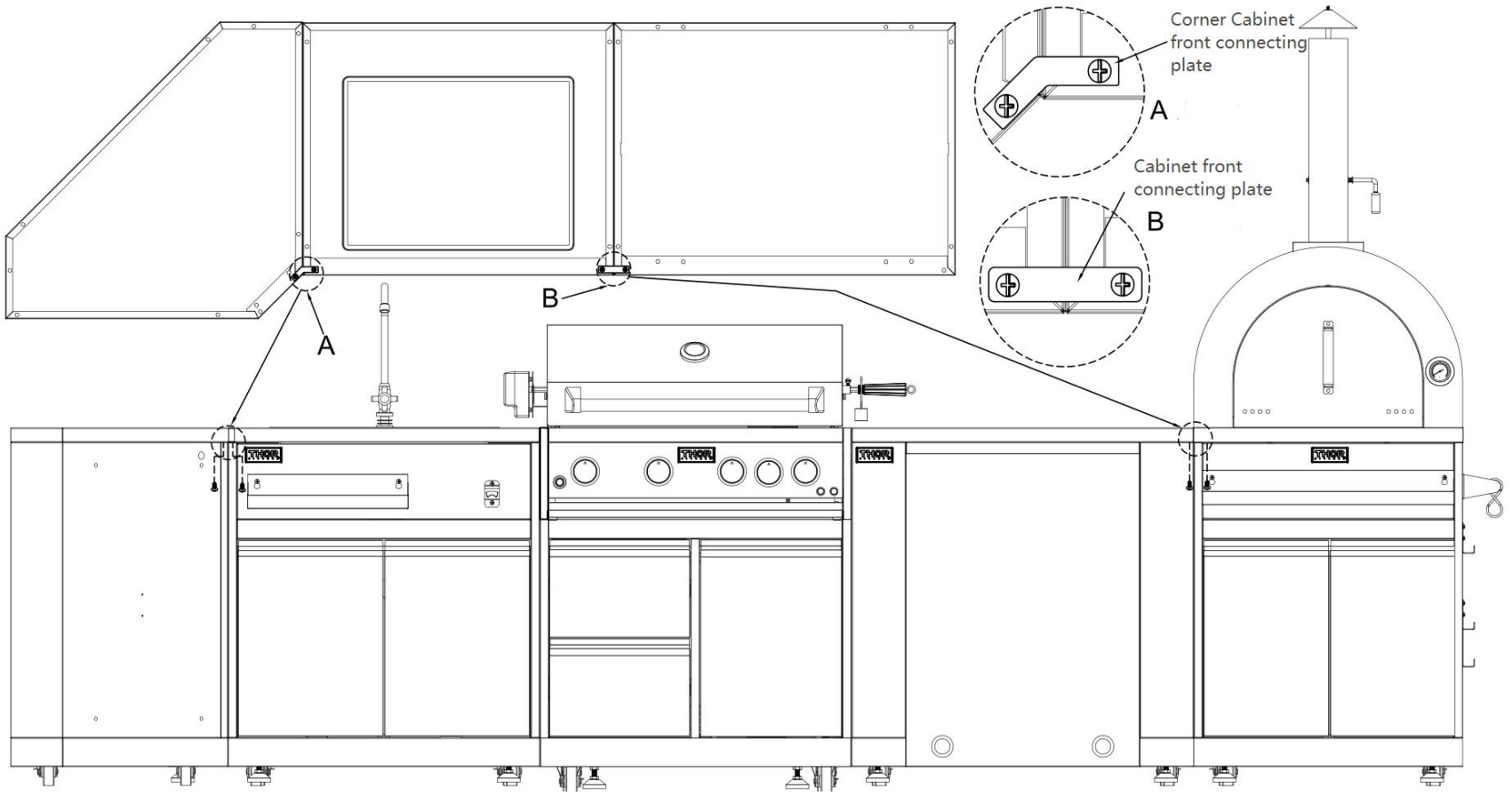

You Thor Kitchen Outdoor Cabinet could be connected with any other Thor Kitchen Our Door Cabinet models.

If you are having a Corner Cabinet and you would like to connect it to another cabinet, use corner cabinet connecting plate with 2 pcs ¼" screws (Part # 06.02.00093-000-A0) to connect both cabinets;

If you are having a Sink Cabinet, Appliance Cabinet or Pizza oven Cabinet, use cabinet connecting plate with 2 pcs ¼" screws to connect both cabinets.

service@thorgroup.us +1 877-288-8099

service@thorgroup.us +1 877-288-8099

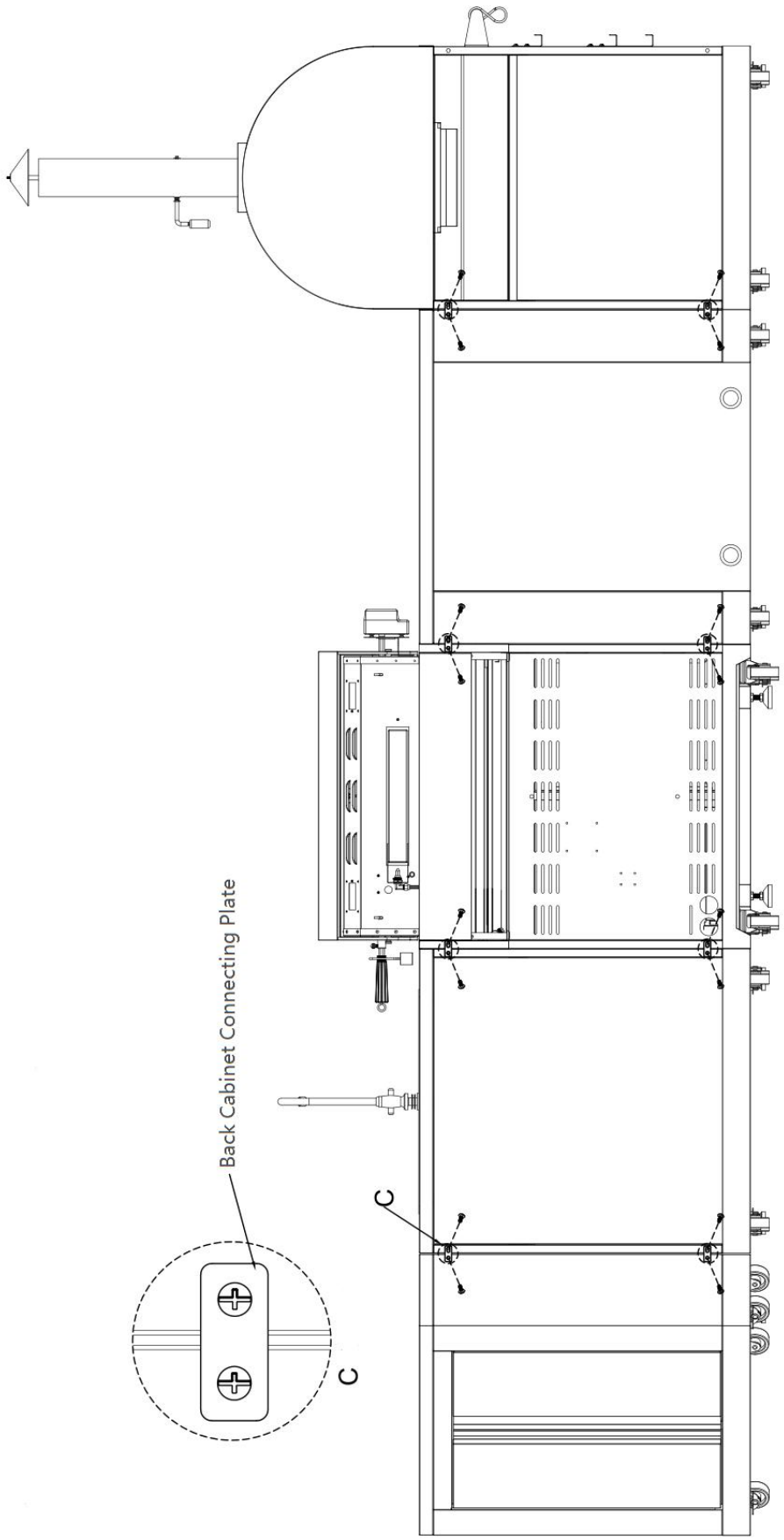

You Thor Kitchen Outdoor Cabinet could be connected with any other Thor Kitchen Our Door Cabinet models.

For Back Panel Connections, use Back Cabinet connecting plate with 2 pcs ¼" screws (Part # 06.02.00093-000-A0) to connect both Cabinets.

service@thorgroup.us +1 877-288-8099

THOR KITCHEN OUTDOOR Corner Cabinet Installation Manual

MODEL# MK06SS304

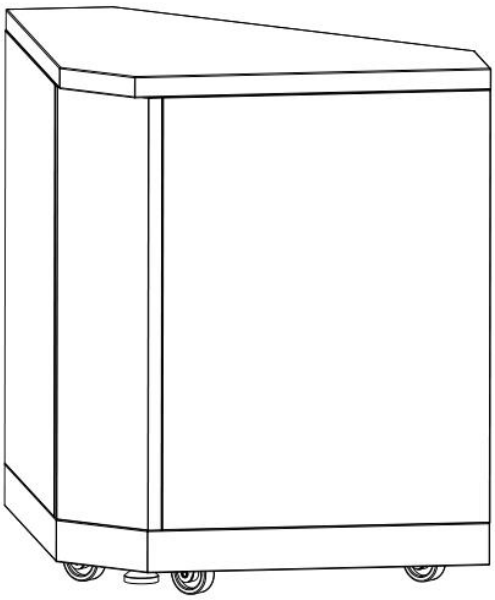

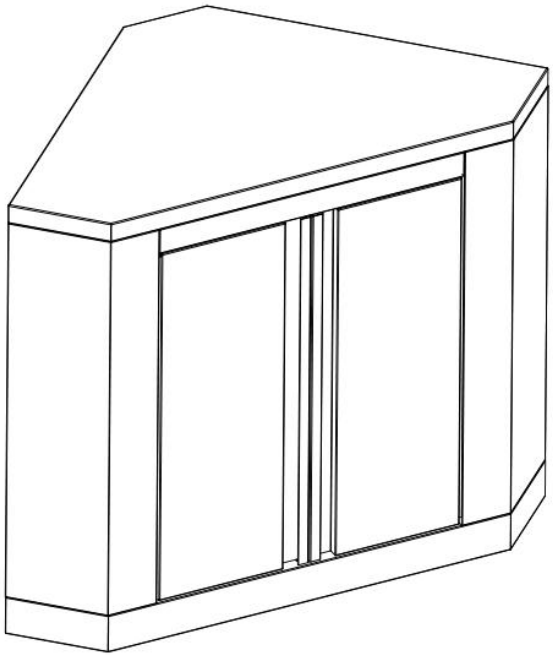

IMPORTANT:

Save for electrical inspector's use.
Installer: Leave installation instructions with the homeowner.
Homeowner: Keep installation instructions for future reference

Welcome

Thank you for purchasing your Thor Kitchen Appliance! We appreciate your business and we recommend that you read this entire User's Manual before operating your new appliance for the first time.

This manual contains instructions on how to properly install and set up your new range, as well as insights into the unique features that our product offers. Please keep this manual for future reference, as it contains answers to questions that you might have as you begin to cook.

For any inquiries, please reach our customer service support at +1 877-288-8099 at our business hours or email service@thorgroup.us.

Thank you,

Thor Group

This manual applies to the following models' series:

Model # MK06SS304 (Outdoor Corner Cabinet)

service@thorgroup.us +1 877-288-8099

Parts Explosive Pictures

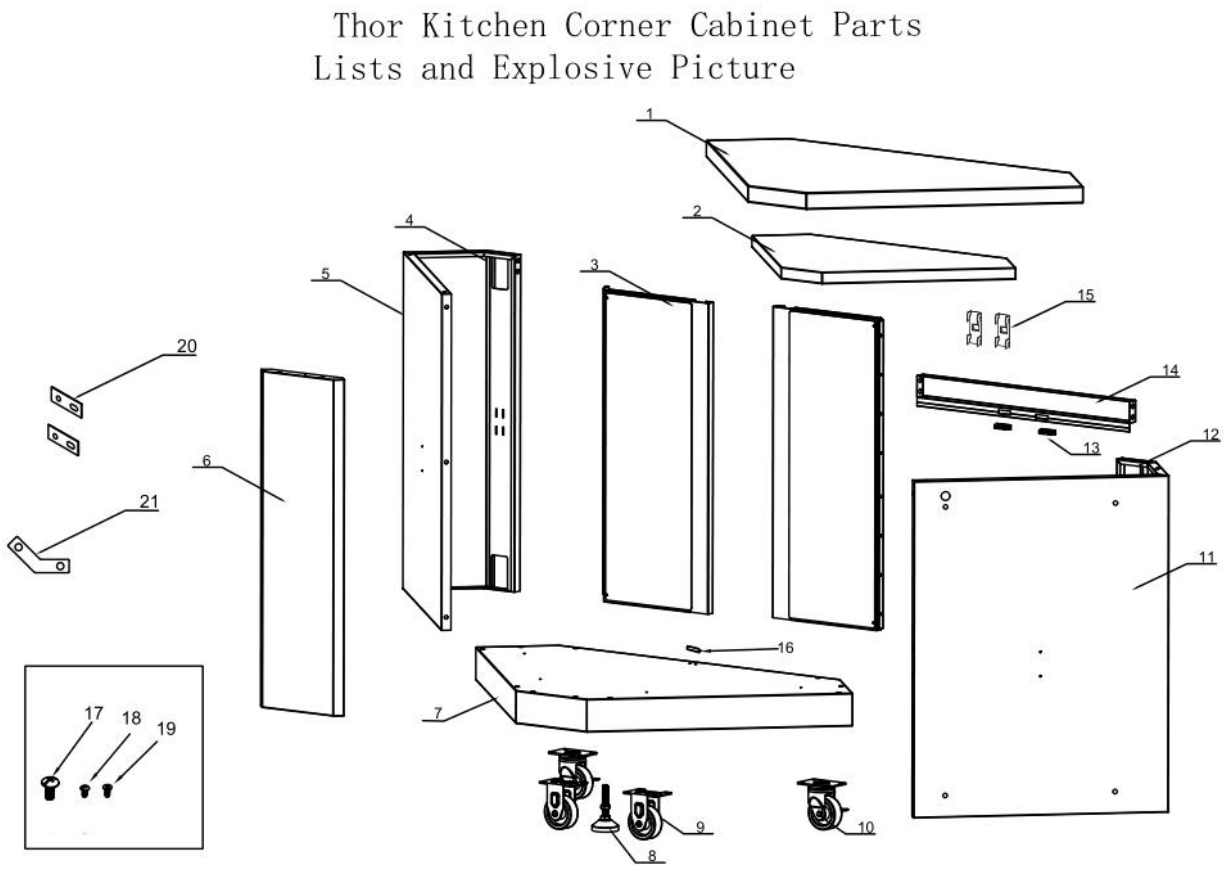

Parts List

If you are missing any part, please contact Thor Kitchen Customer Service Department at 877-288-8099 at business hours, or email service@thorgroup.us for help.

Explosive #	Part #	Part Name	Quantity
1	20.01.008054-000-A0	Countertop welding assembly	1
2	20.01.001063-000-A0	Laminate welding assembly	1
3	22.99.009228-000-A0	Door welding assembly	2
4	20.01.001059-000-A0	Left side panel A welding assembly	1
5	20.01.001060-000-A0	Left side panel B welding assembly	1
6	20.01.001064-000-A0	Front panel welding assembly	1
7	20.01.008077-000-A0	Bottom panel welding assembly	1
8	05.01.008004-000-A0	Supporting leg	2
9	05.10.000122-000-A0	Fixed caster	2
10	05.10.000123-000-A0	Universal caster	2
11	20.01.001062-000-A0	Right side panel B welding assembly	1
12	20.01.001061-000-A0	Left side panel A welding assembly	1
13	05.12.008009-000-A0	Door magnetic	2
14	20.05.008086-000-A0	Beam welding assembly	1
15	04.04.008570-000-A0	Laminate welding holder	2
16	04.01.002596-000-A1	Door barrier strip	1
17	06.02.000093-000-A0	¼” Philips thumb head screw with anti-slip design	58
18	06.10.000042-000-A0	Philips thumb head screw	2
19	06.11.008056-000-A0	flat head screw	16
20	04.01.002580-000-A0	cabinet back connecting plate	2
21	04.01.002640-000-A0	corner cabinet front connecting plate	1

service@thorgroup.us +1 877-288-8099

Product Dimension

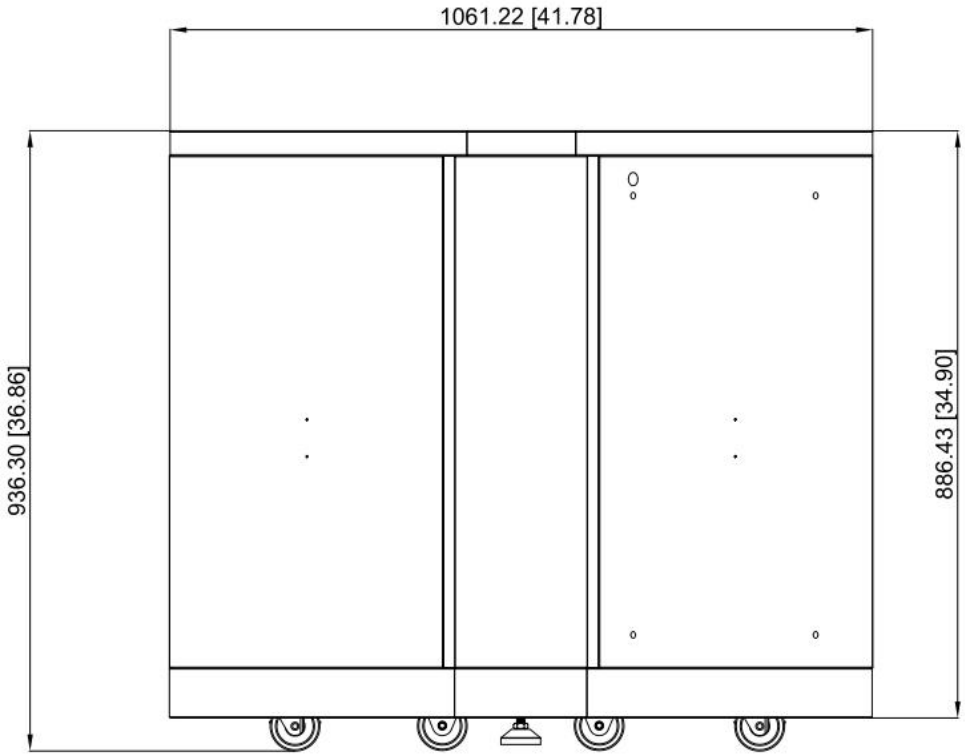

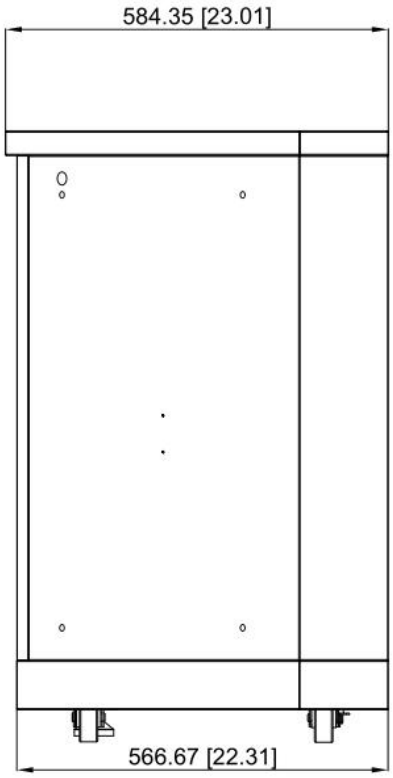

Cabinet Installation

Step 1

1. Reverse the bottom welding part (Part # 7) and put 1 pc supporting leg (Part # 8) to Part # 7. Use hand to adjust the leg to the suitable position;
2. Use 16 pcs ¼" flat Philip's head screw (Part #17) to connect 2 pcs fixed casters (Part # 9) and 2 pcs universal casters with brake (Part # 10) to Part #7;
3. Reverse Part # 7 and use 2 pcs Philips thumb head screw (Part # 18) to install Door barrier strip (Part # 18) to Part # 7.

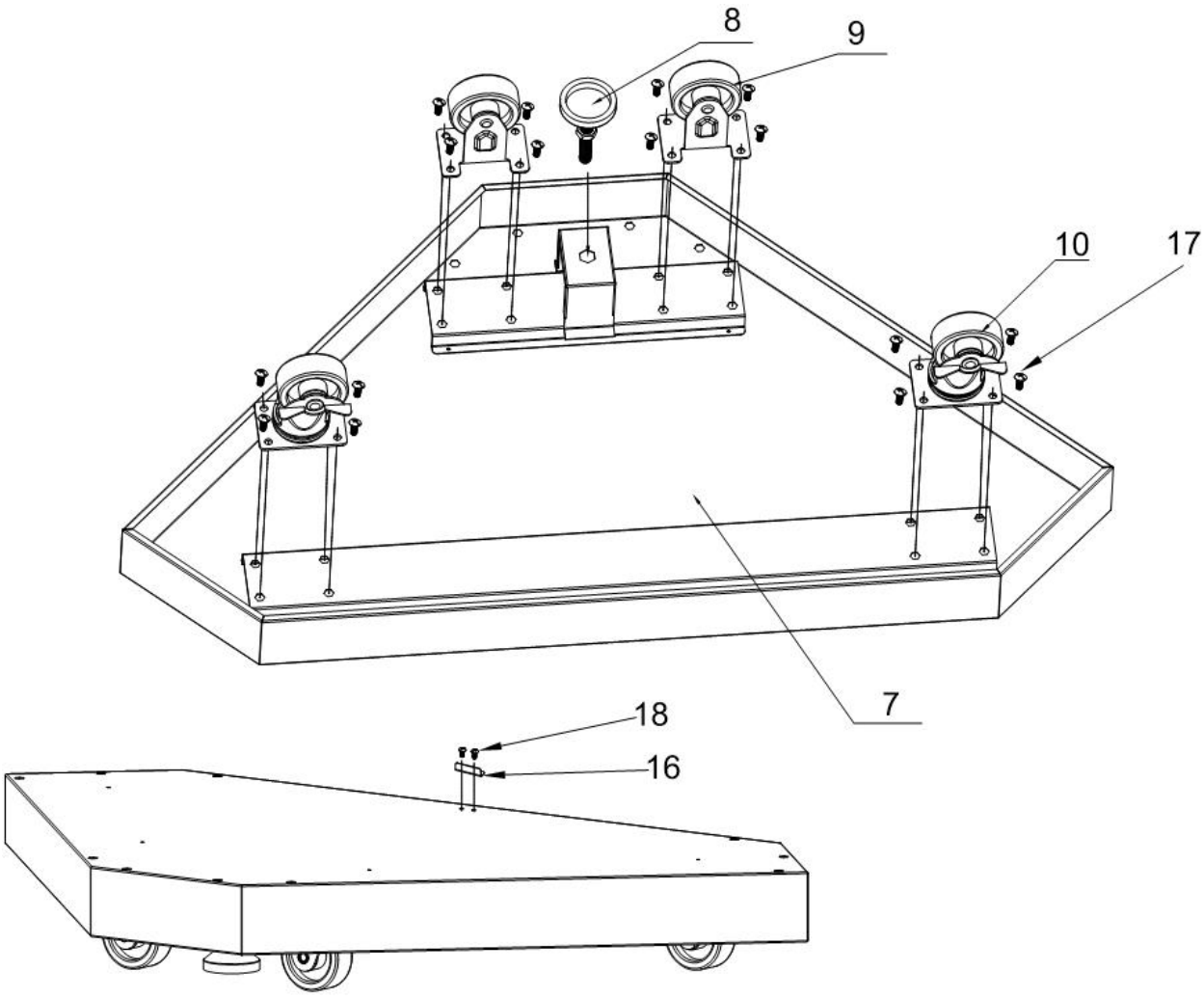

Step 2

1. Use 3 pcs ¼” flat Philip’s head screw (Part # 17) to connect left side panel A (Part # 4) to Part # 5;
2. Use 3 pcs ¼” flat Philip’s head screw (Part # 17) to connect right side panel a (Part # 12) to Part # 11;
3. Do not over-tighten all the screws until parts are lined up.

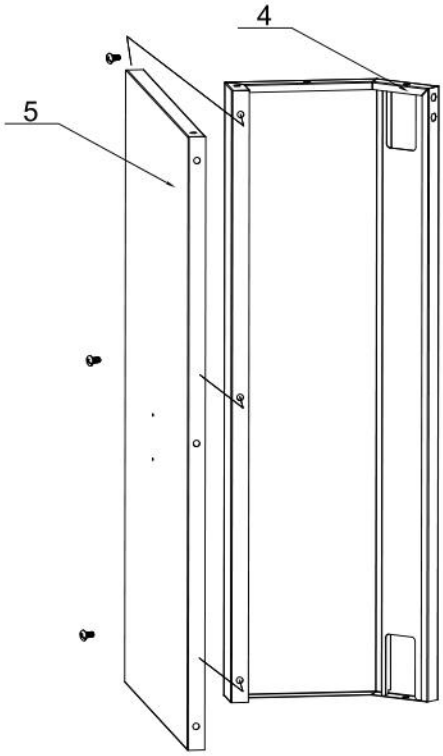

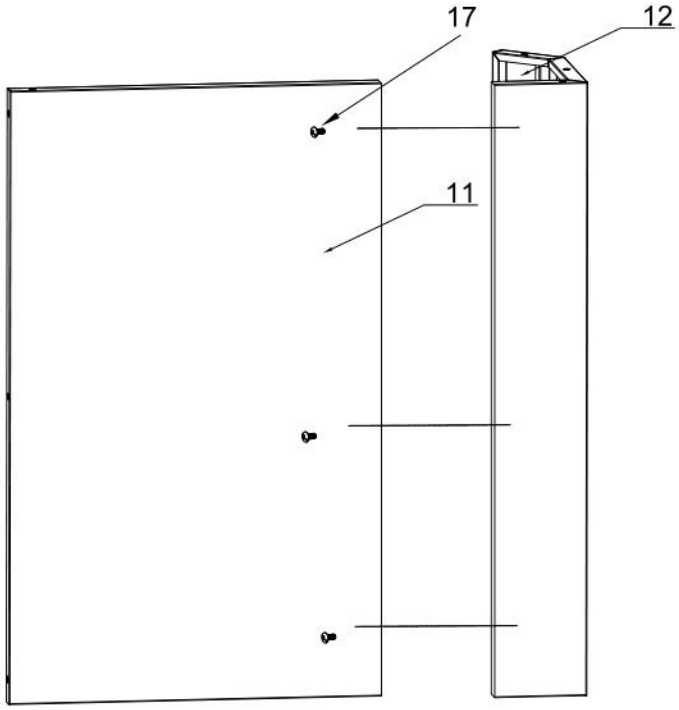

Step 3

1. Use 6 pcs ¼" flat Philip's head screw (Part # 15) to connect front panel (Part # 6) to Part #5 and #11. Do not over-tighten all the screws until parts are lined up.

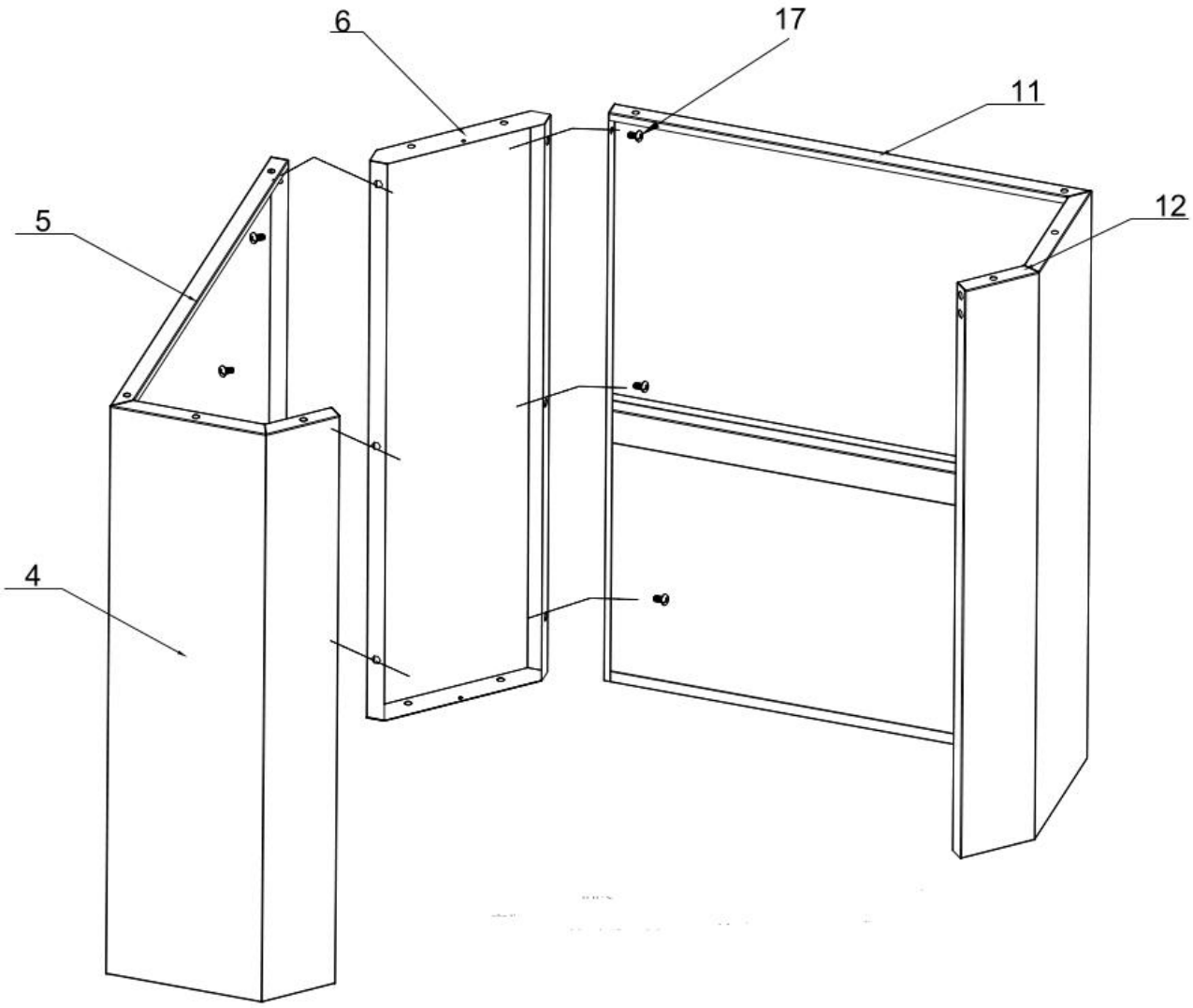

Step 4

1. Use 4 pcs Philips thumb head screw with anti-slip design (Part # 17) to connect Left side panel A welding assembly (Part # 4) and Left side panel B welding assembly (Part # 5) to Bottom panel welding assembly (Part # 7);
2. Use 4 pcs Part # 17 to connect Right side panel B welding assembly (Part # 11) and Left side panel A welding assembly (Part # 12) to Part # 7;
3. Use 2 pcs Part 17 to connect Front panel welding assembly (Part # 6) to Part # 7.
4. Do not over-tighten all the screws until parts are lined up.

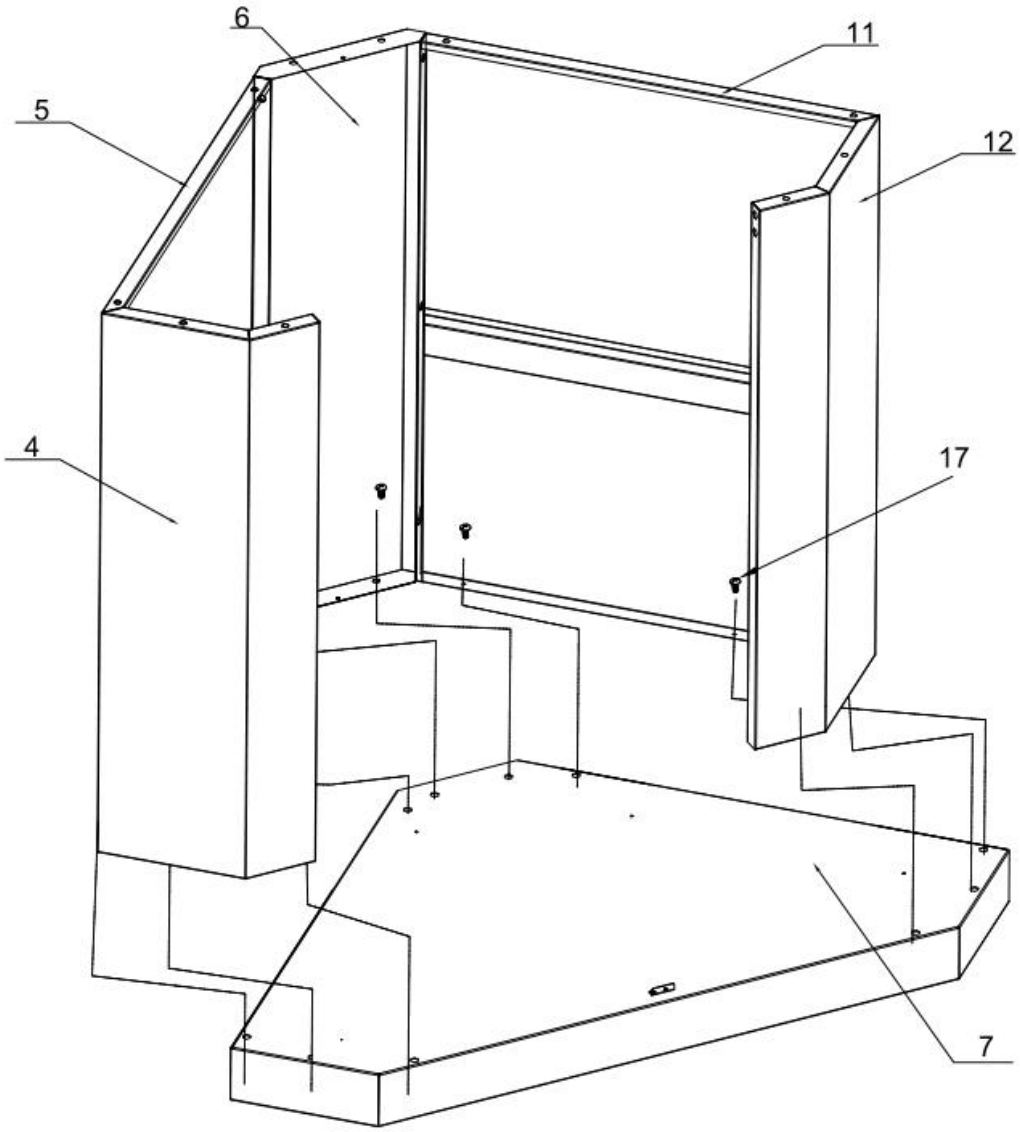

Step 5

1. Use 4 pcs Part # 17 to connect Beam welding assembly (Part # 14) to Part # 4 and Part # 12. Do not over-tighten all the screws until parts are lined up.

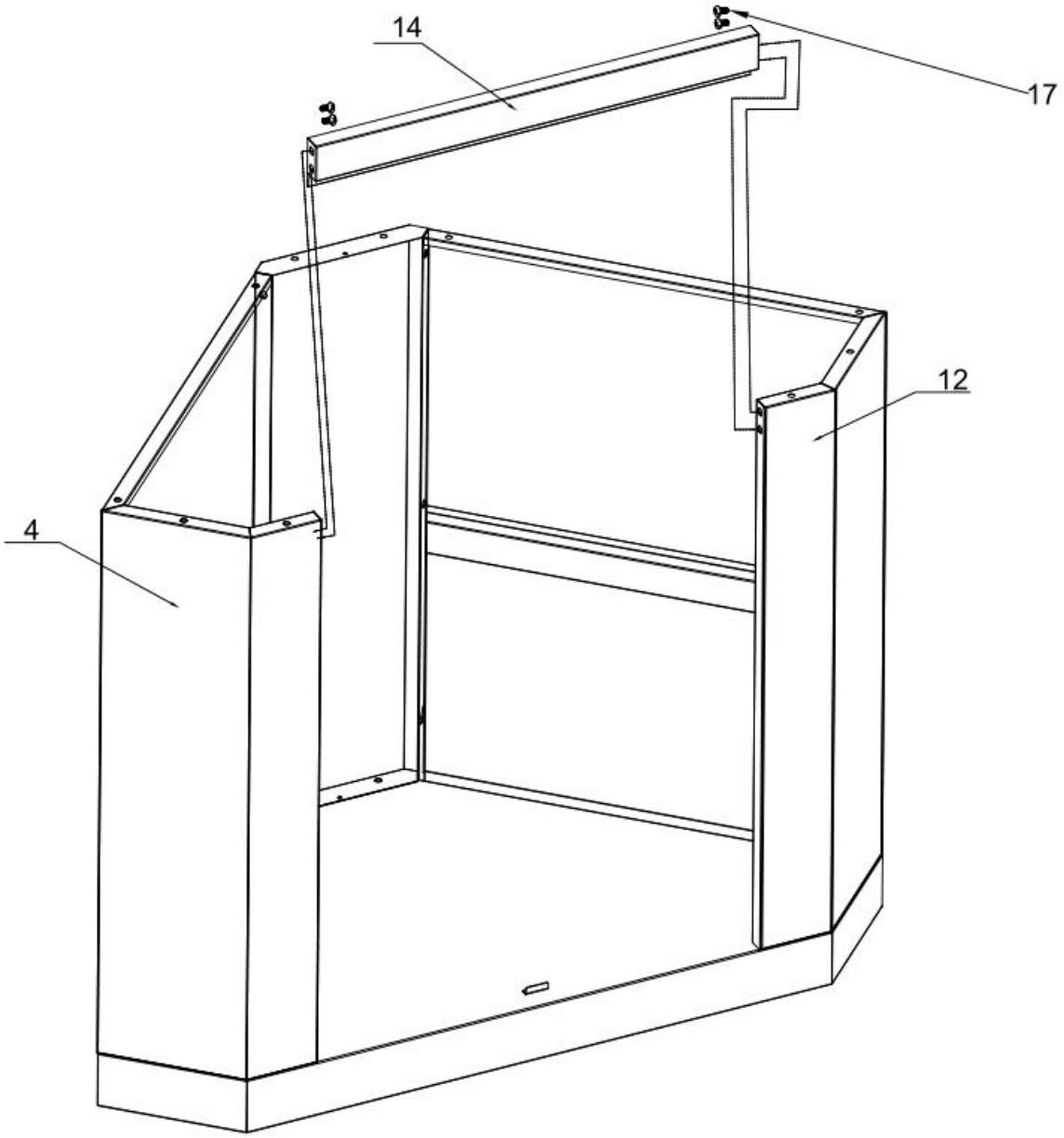

Step 6

1. Install 2 pcs Laminate welding holder (Part # 15) to Part # 4 and Part # 12, and then install Laminate welding assembly (Part # 2) on the top;
2. Use 16 pcs flat head screw (Part # 19) to install Door welding assembly (Part # 3) to Part # 4 and Part # 12.
3. Do not over-tighten all the screws until parts are lined up.

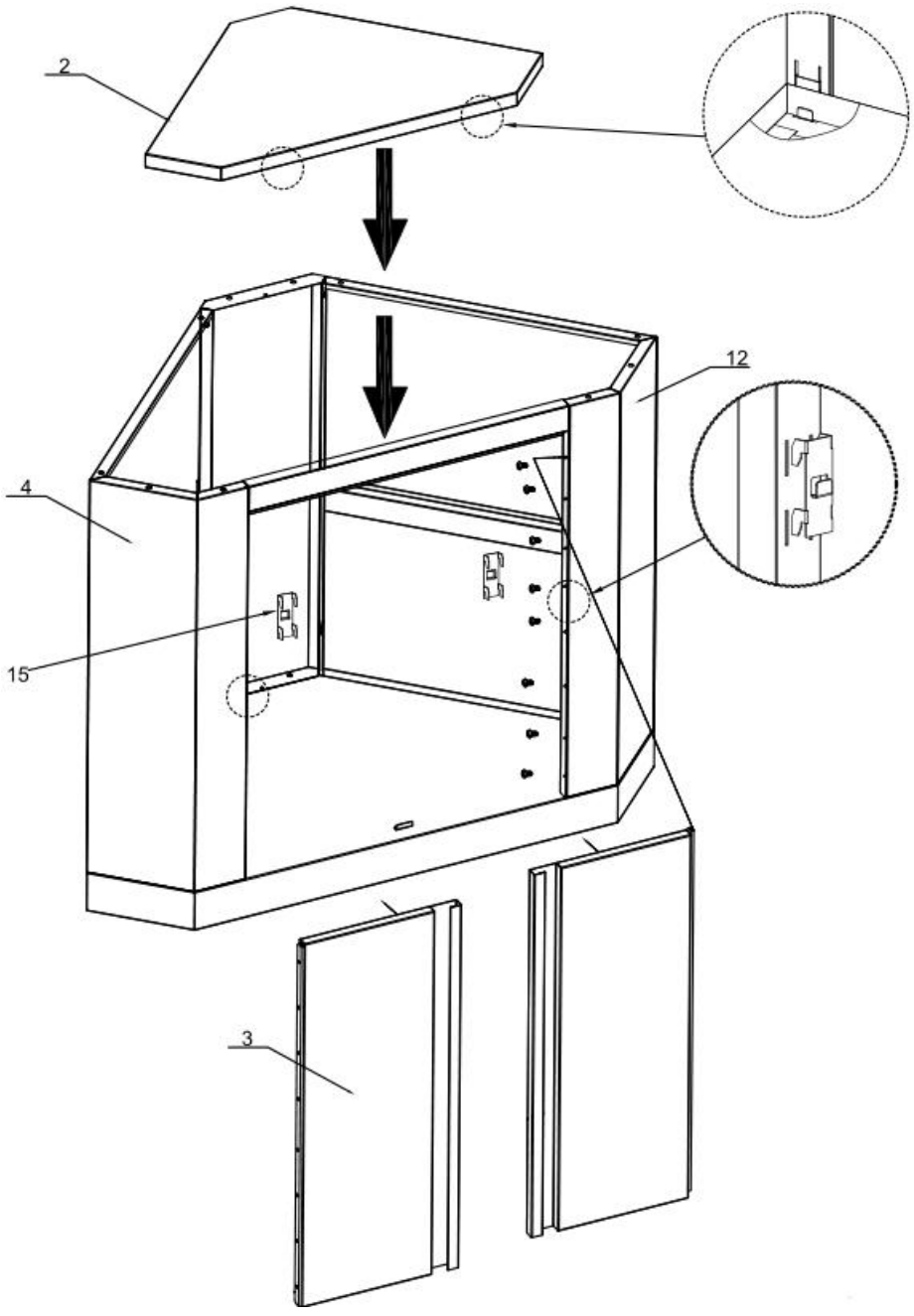

Step 7

1. Make sure Part # 2 is installed inside the cabinet first;
2. Use 10 pcs Part # 17 to Connect Countertop welding assembly (Part # 1) with Part # 4, # 5, # 6, # 11 and # 12. Do not over-tighten all the screws until parts are lined up.

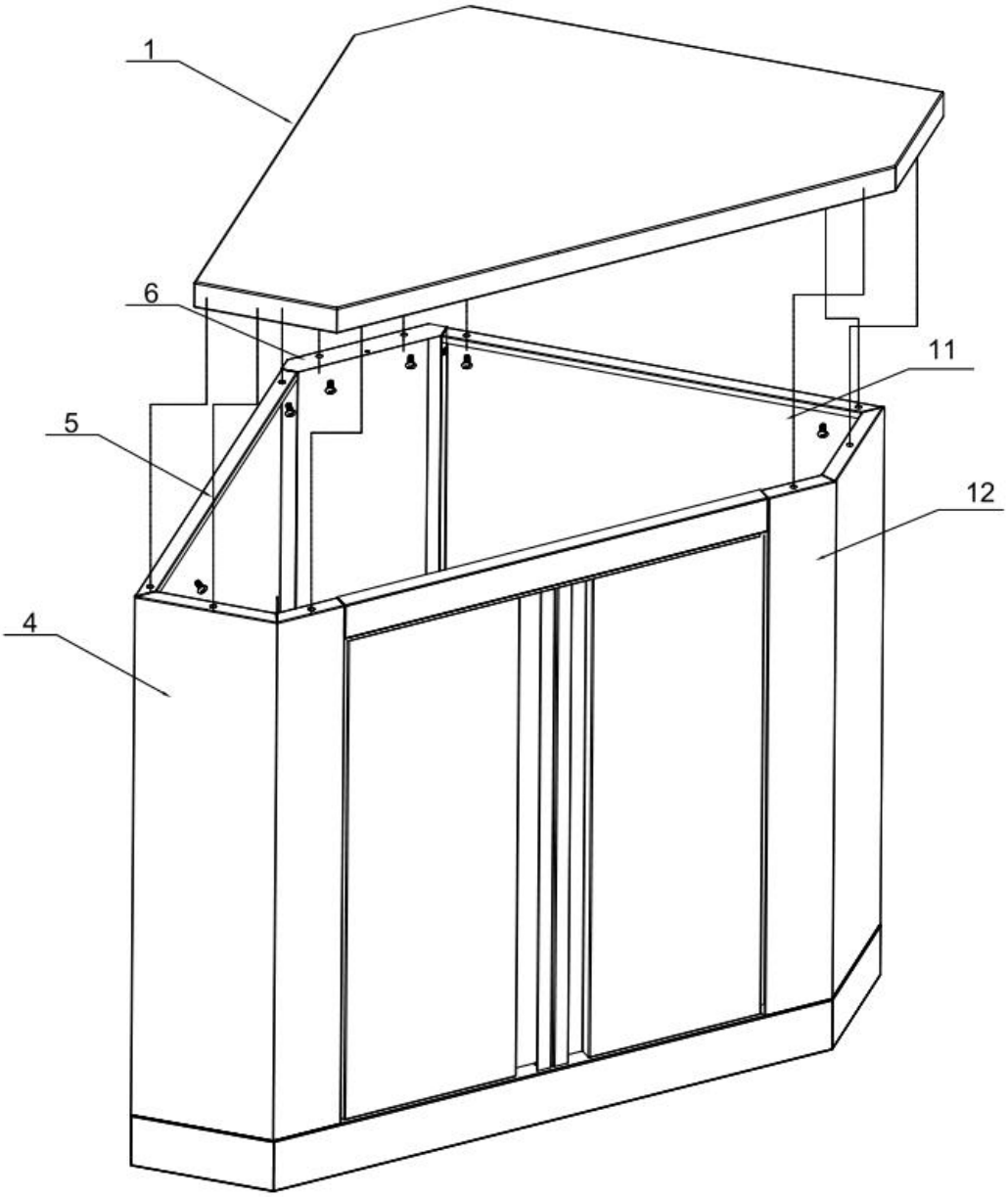

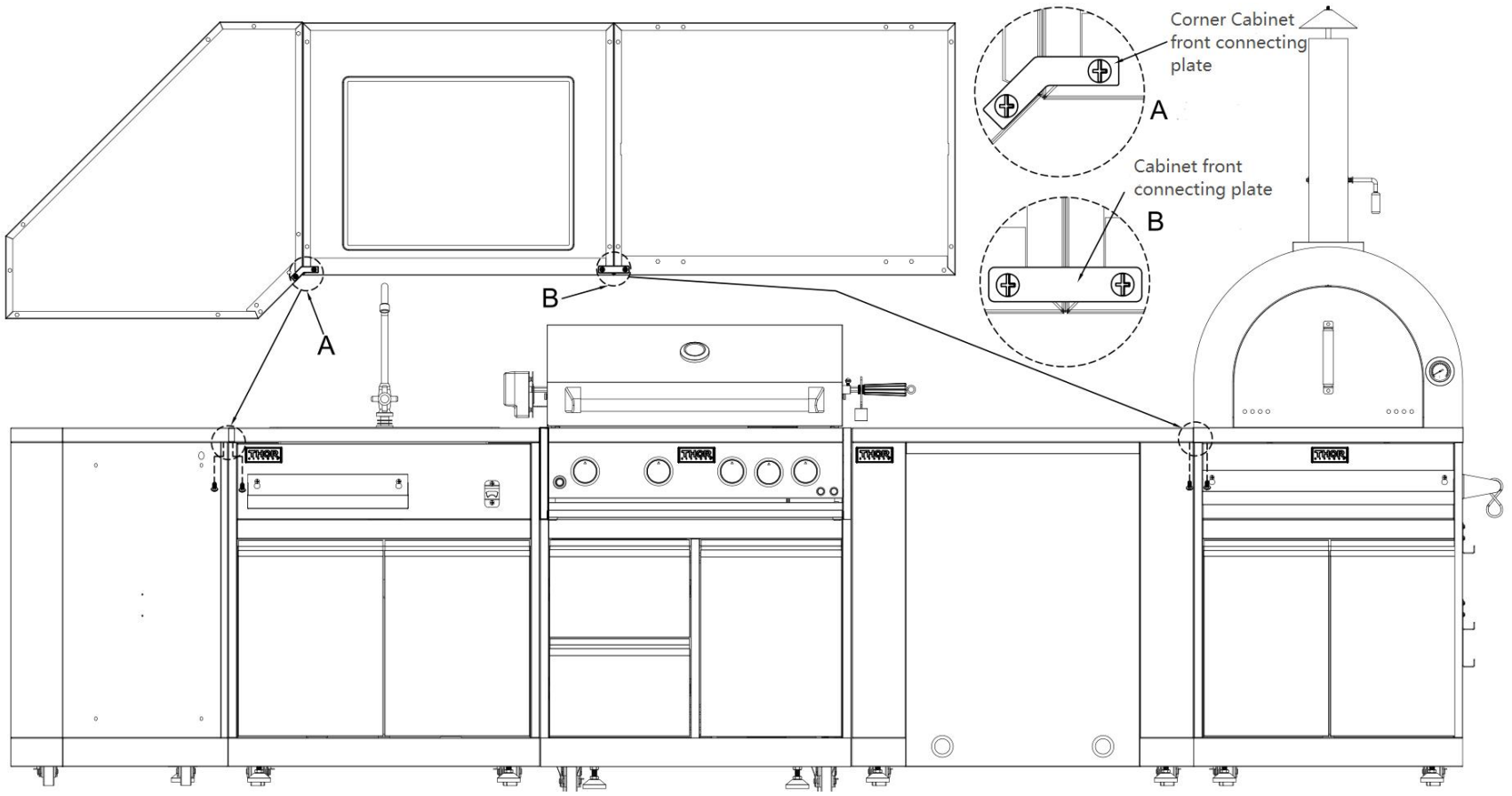

You Thor Kitchen Outdoor Cabinet could be connected with any other Thor Kitchen Our Door Cabinet models.

If you are having a Corner Cabinet and you would like to connect it to another cabinet, use corner cabinet connecting plate with 2 pcs ¼" screws (Part # 06.02.00093-000-A0) to connect both cabinets;

If you are having a Sink Cabinet, Appliance Cabinet or Pizza oven Cabinet, use cabinet connecting plate with 2 pcs ¼" screws to connect both cabinets.

service@thorgroup.us +1 877-288-8099

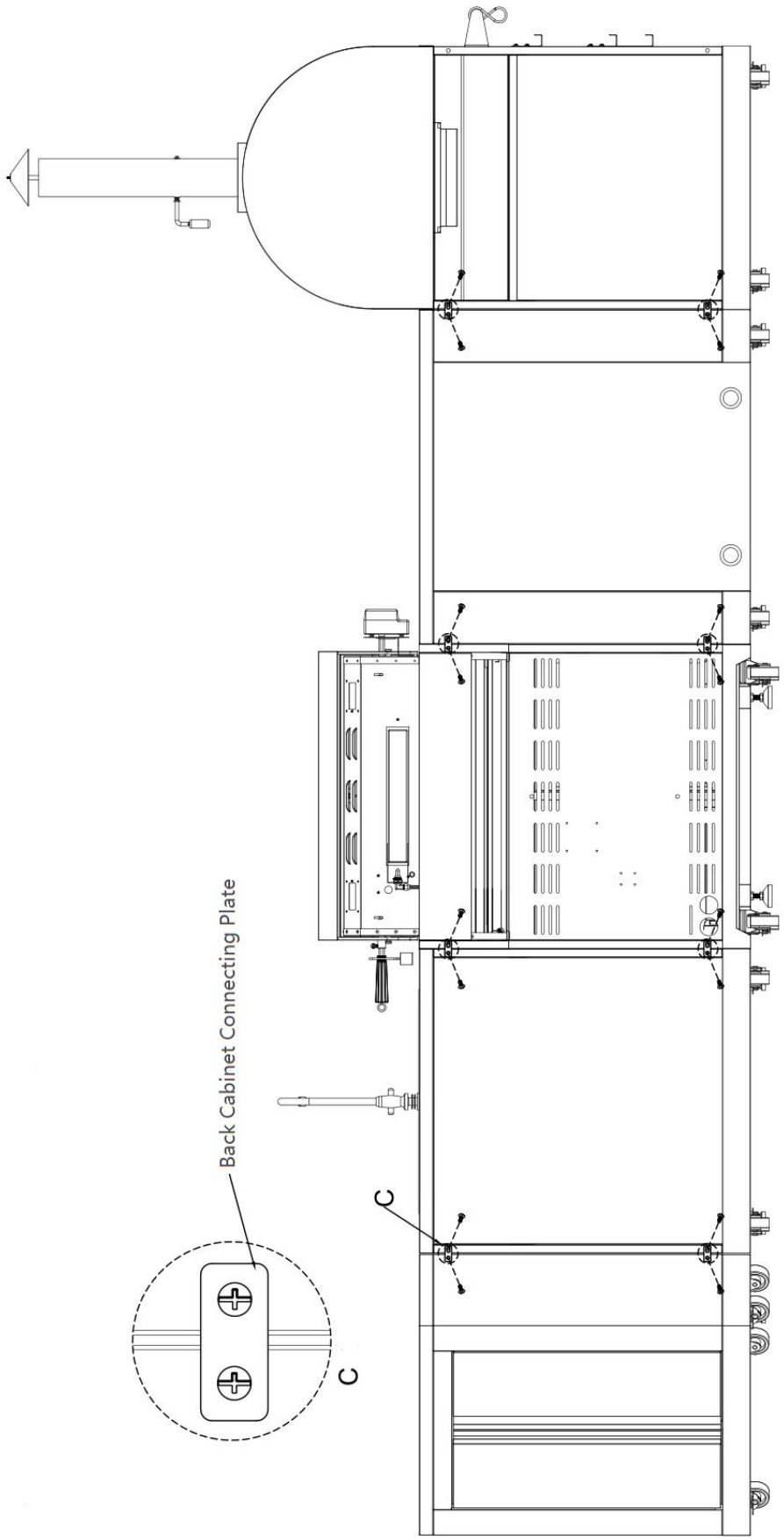

You Thor Kitchen Outdoor Cabinet could be connected with any other Thor Kitchen Our Door Cabinet models.

For Back Panel Connections, use Back Cabinet connecting plate with 2 pcs ¼" screws (Part # 06.02.00093-000-A0) to connect both Cabinets.

service@thorgroup.us +1 877-288-8099

THOR KITCHEN OUTDOOR Appliance Cabinet Installation Manual

MODEL# MK02SS304 (Appliance Not included)



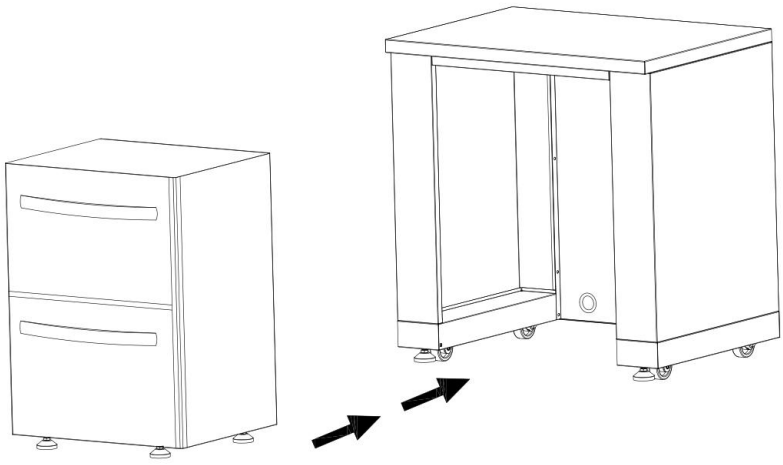

IMPORTANT:

Save for electrical inspector's use.
Installer: Leave installation instructions with the homeowner.
Homeowner: Keep installation instructions for future reference

Welcome

Thank you for purchasing your Thor Kitchen Appliance! We appreciate your business and we recommend that you read this entire User's Manual before operating your new appliance for the first time.

This manual contains instructions on how to properly install and set up your new range, as well as insights into the unique features that our product offers. Please keep this manual for future reference, as it contains answers to questions that you might have as you begin to cook.

For any inquiries, please reach our customer service support at +1 877-288-8099 at our business hours or email service@thorgroup.us.

Thank you,

Thor Group

This manual applies to the following models' series:

Model # MK02SS304 (Outdoor Appliance Cabinet)

Model # TRF2401U (Outdoor Two-drawer under cabinet refrigerator)

Model # TWC2401DO (Outdoor Wine Cooler)

service@thorgroup.us +1 877-288-8099

Parts Explosive Pictures

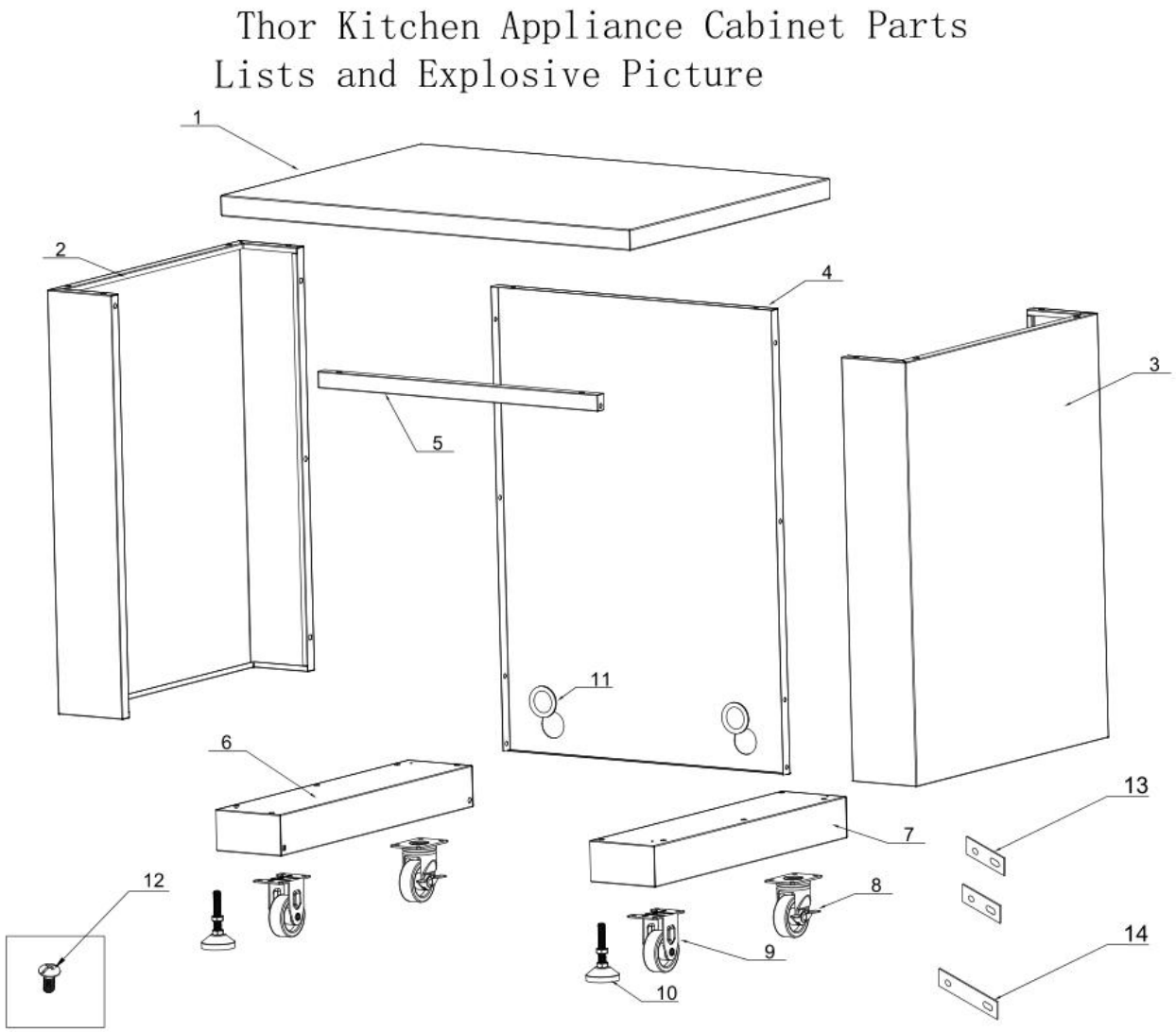

Parts List

If you are missing any part, please contact Thor Kitchen Customer Service Department at 877-288-8099 at business hours, or email service@thorgroup.us for help.

Explosive #	Part #	Part Name	Quantity
1	20.01.008041-000-A0	Countertop welding assembly	1
2	20.01.001030-000-A0	Left side panel welding assembly	1
3	20.01.001031-000-A0	Right side panel welding assembly	1
4	20.01.001032-000-A0	Back panel welding assembly	1
5	20.01.001033-000-A0	Beam welding assembly	1
6	20.01.008042-000-A0	Right bottom panel welding assembly	1
7	20.01.008043-000-A0	Left bottom panel welding assembly	1
8	05.10.000123-000-A0	Universal caster with brake	2
9	05.10.000122-000-A0	Fixed caster	2
10	05.01.008004-000-A0	Supporting leg	2
11	06.08.008078-000-A0	Rubber gasket	2
12	06.02.000093-000-A0	Philips thumb head screw with anti-slip design	56
13	04.01.002580-000-A0	cabinet back connecting plate	2
14	04.01.002579-000-A0	cabinet front connecting plate	1

Product Dimension

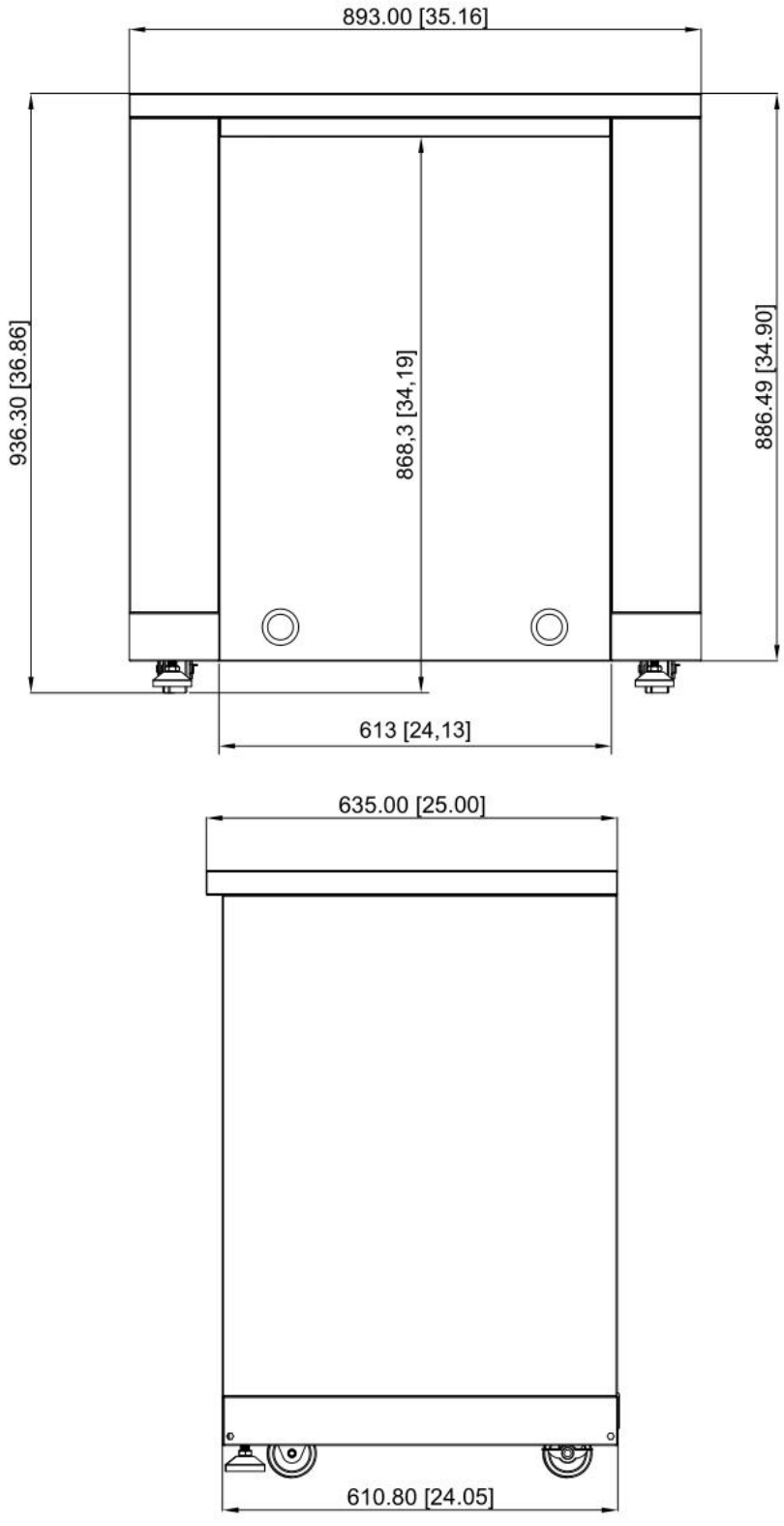

Cabinet Installation

Step 1

1. Install 2 pcs Supporting Leg (Part # 10) to bottom right welding assembly (Part # 6) and bottom left welding assembly (Part # 7). Use hand to adjust the supporting leg to the suitable position;
2. Use 16 pcs ¼" flat Philip's head screw (Part # 12) to connect 2 pcs fixed caster (Part # 9) and 2 pcs universal casters (Part # 8) to Part #6 and #7.

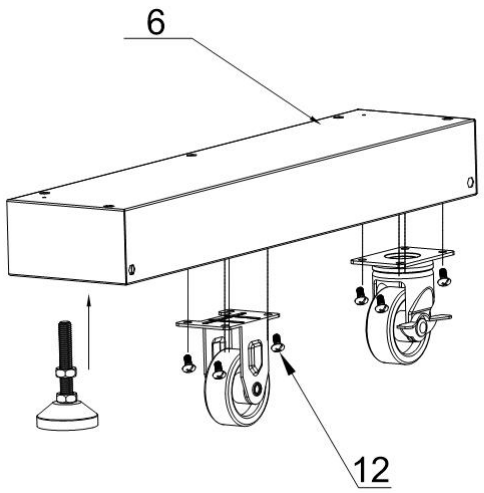

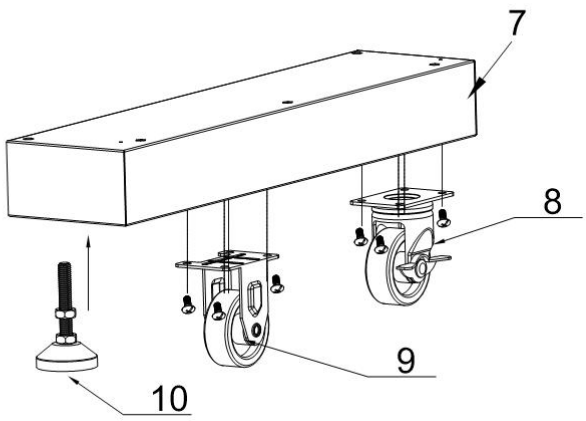

Step 2

1. Use 5 pcs ¼” flat Philip’s head screws (part # 12) to connect left side panel (Part # 2) to Part #6;
2. Use 5 pcs ¼” flat Philip’s head screws (part # 12) to connect right side panel (Part # 3) to Part #7;
3. Do not over-tighten all the screws until parts are lined up.

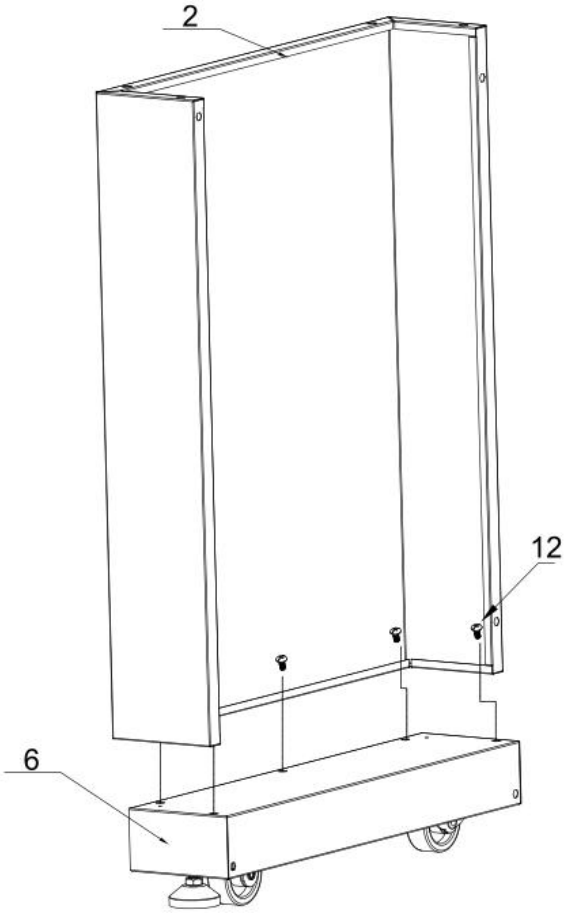

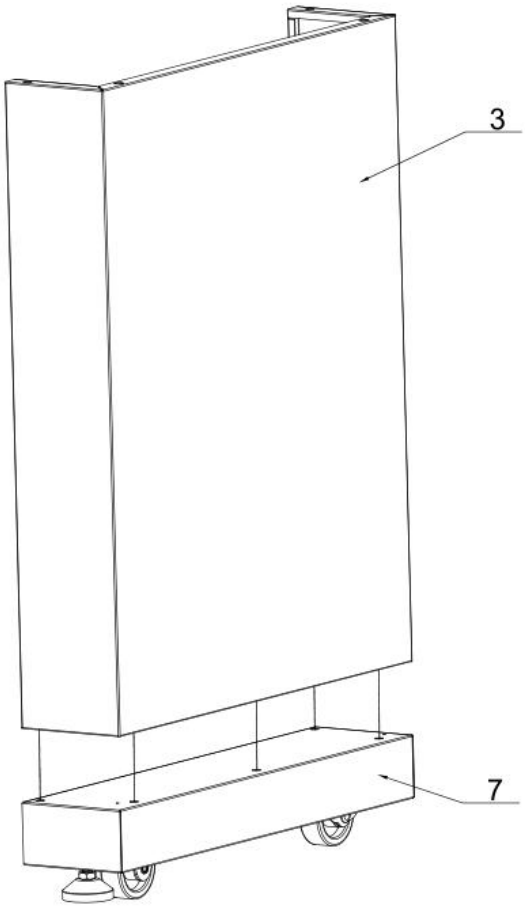

Step 3

1. Install 2 pcs rubber gaskets (Part # 11) to Back Panel (Part # 4);
2. Use 4 pcs ¼” flat Philip’s head screws (Part # 12) to connect Part #4 to Part #2 and #6;
3. Use 4 pcs ¼” flat Philip’s head screws (Part # 12) to connect Part #4 to Part #3 and #7;
4. Do not over-tighten all the screws until parts are lined up.

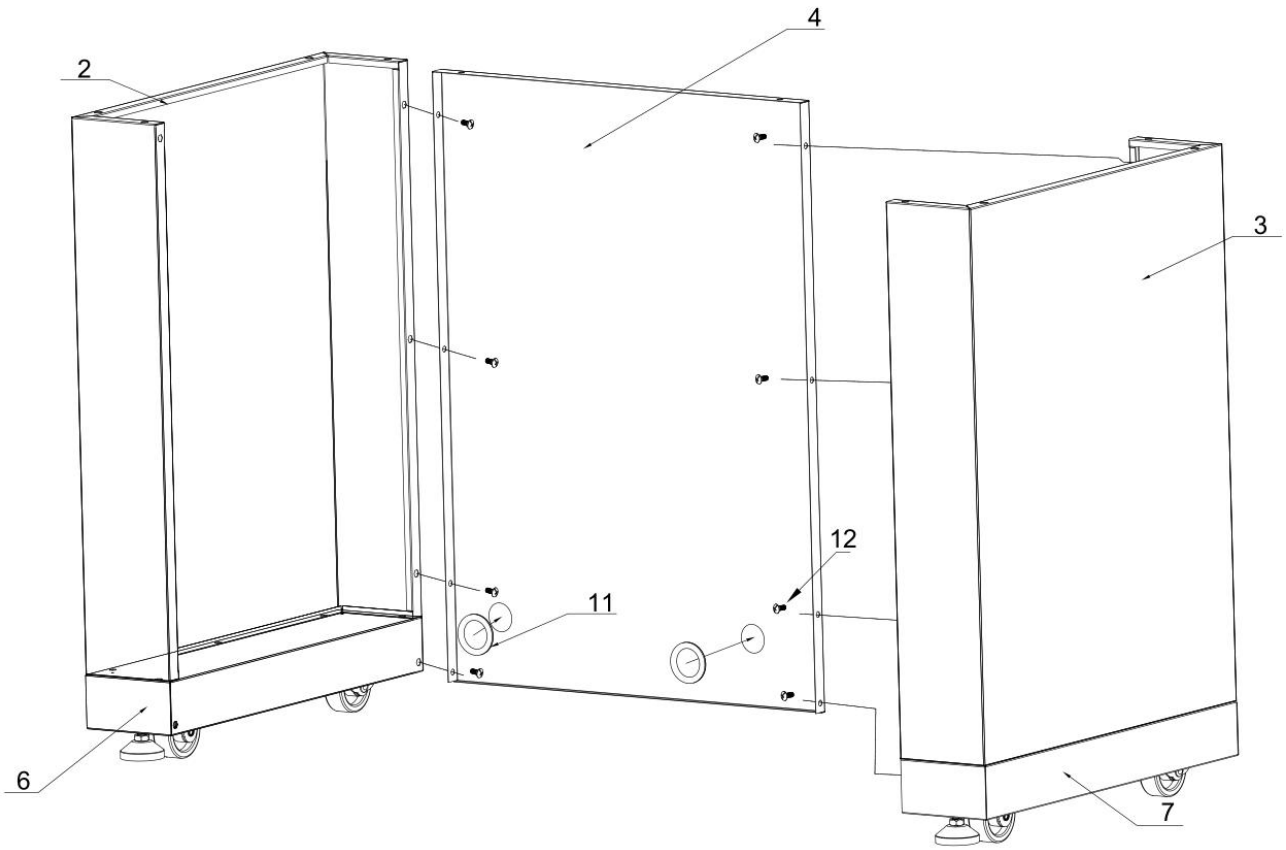

Step 4

1. Use 2 pcs ¼" flat Philip's screw head (Part # 12) to connect beam welding assembly (Part # 5) to Part #2 and #3;
2. Make sure the connection is smooth. Do not over-tighten all the screws until parts are lined up.

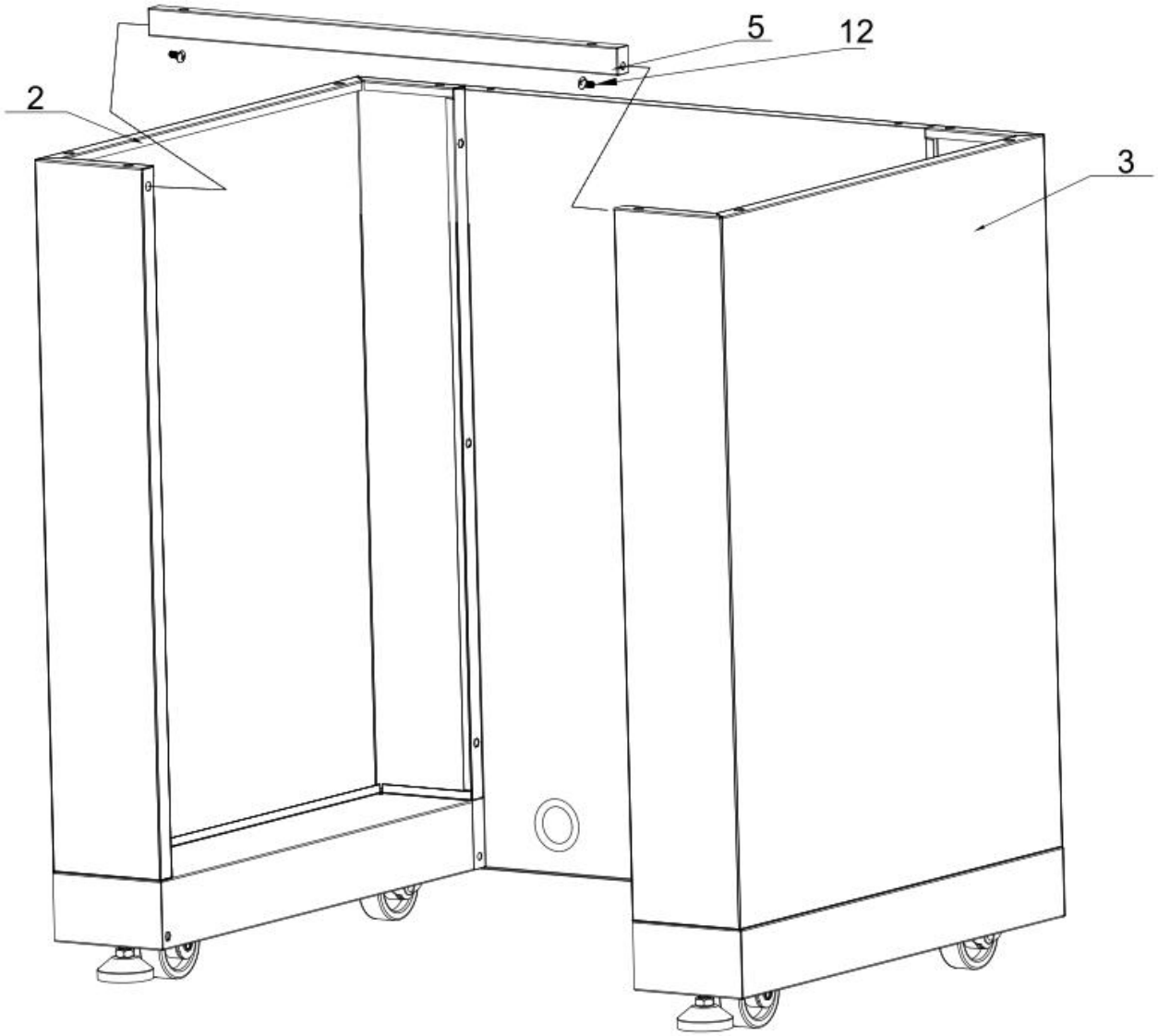

Step 5

1. Use 12 pcs ¼" flat Philip's screw head (Part # 12) to connect top cover board (Part # 1) with Part #2, #3, #4 and #5
2. Make sure the connection is smooth. Do not over-tighten all the screws until parts are lined up.

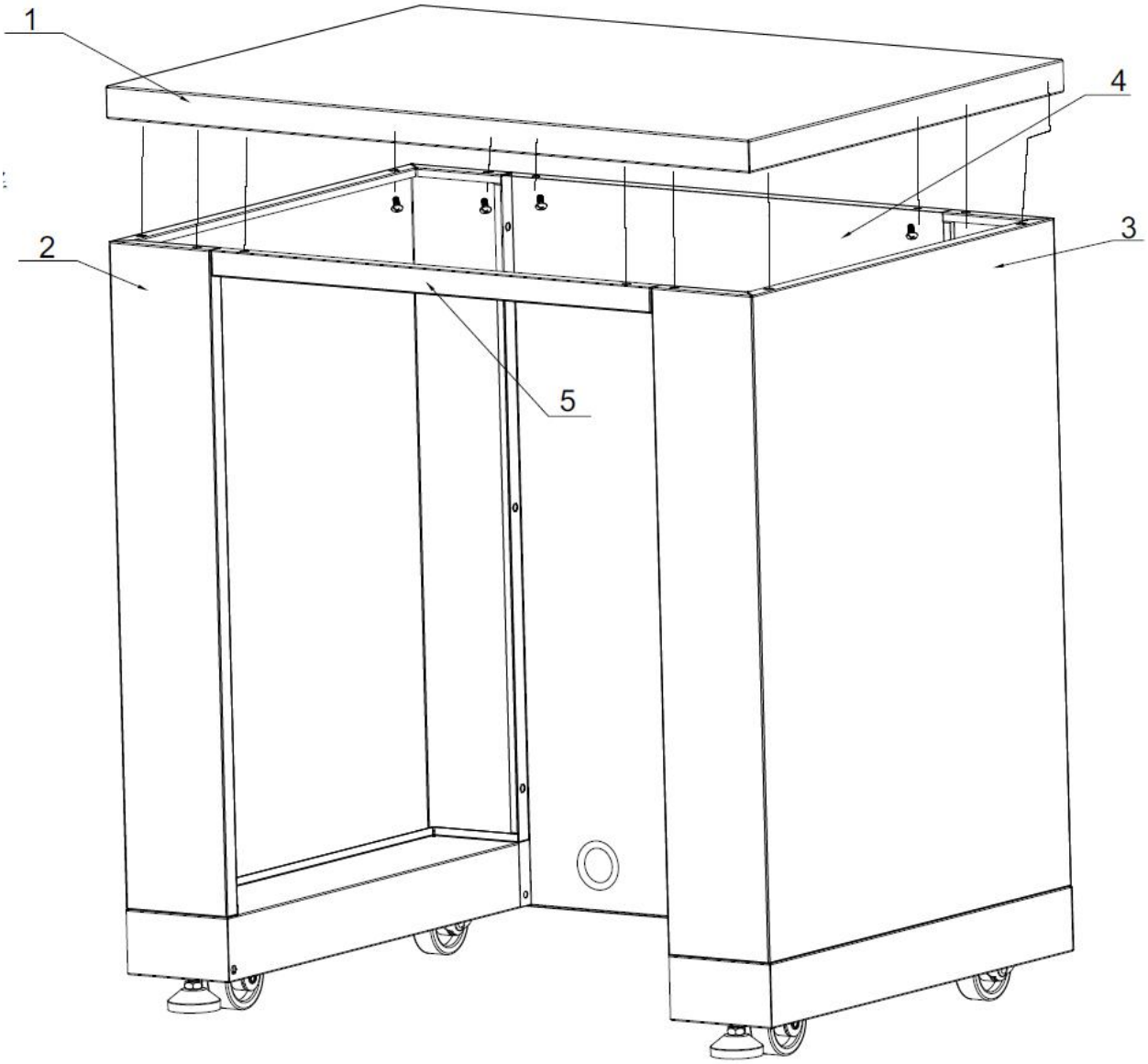

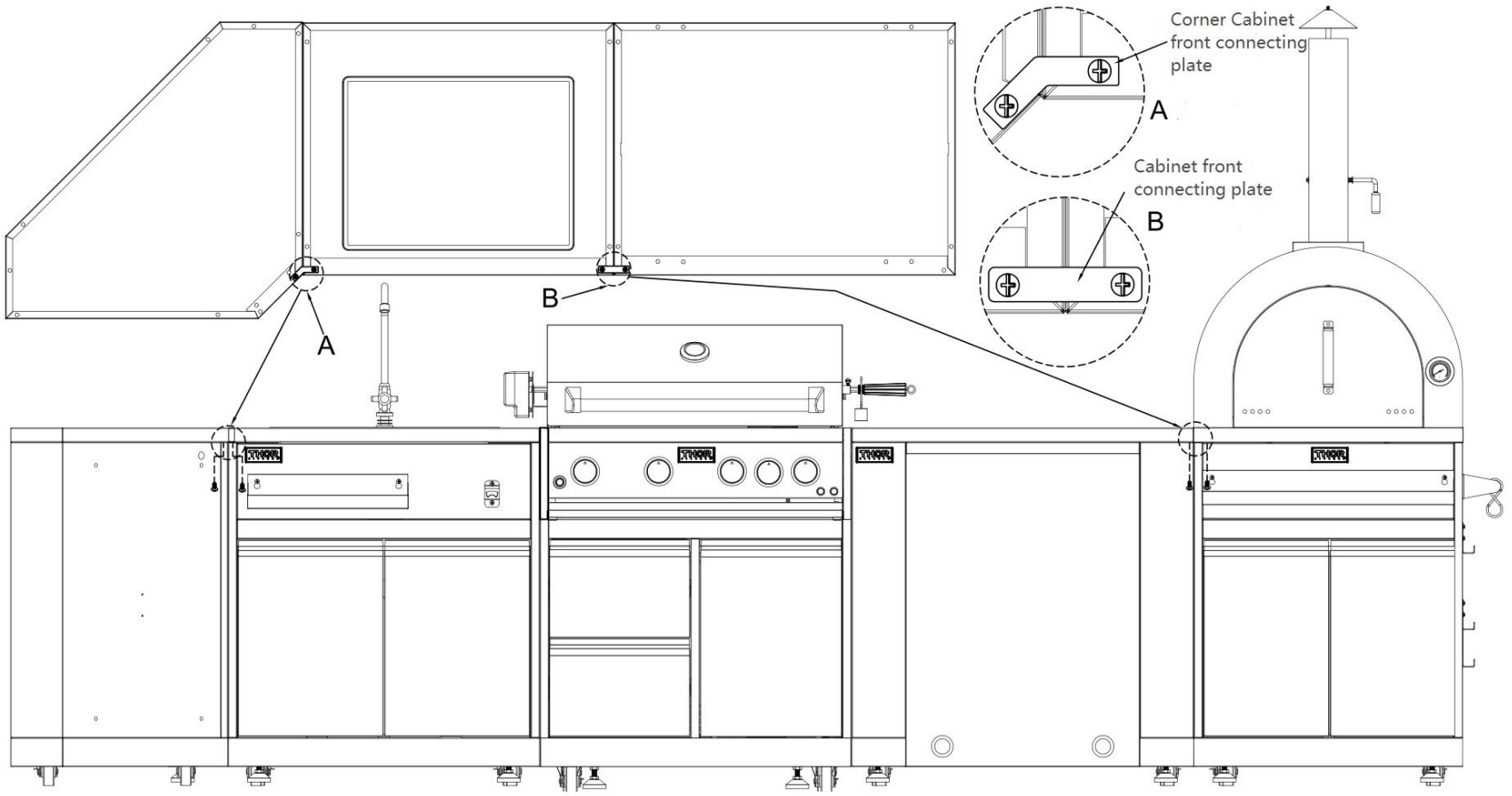

You Thor Kitchen Outdoor Cabinet could be connected with any other Thor Kitchen Our Door Cabinet models.

If you are having a Corner Cabinet and you would like to connect it to another cabinet, use corner cabinet connecting plate with 2 pcs ¼" screws (Part # 06.02.00093-000-A0) to connect both cabinets;

If you are having a Sink Cabinet, Appliance Cabinet or Pizza oven Cabinet, use cabinet connecting plate with 2 pcs ¼" screws to connect both cabinets.

service@thorgroup.us +1 877-288-8099

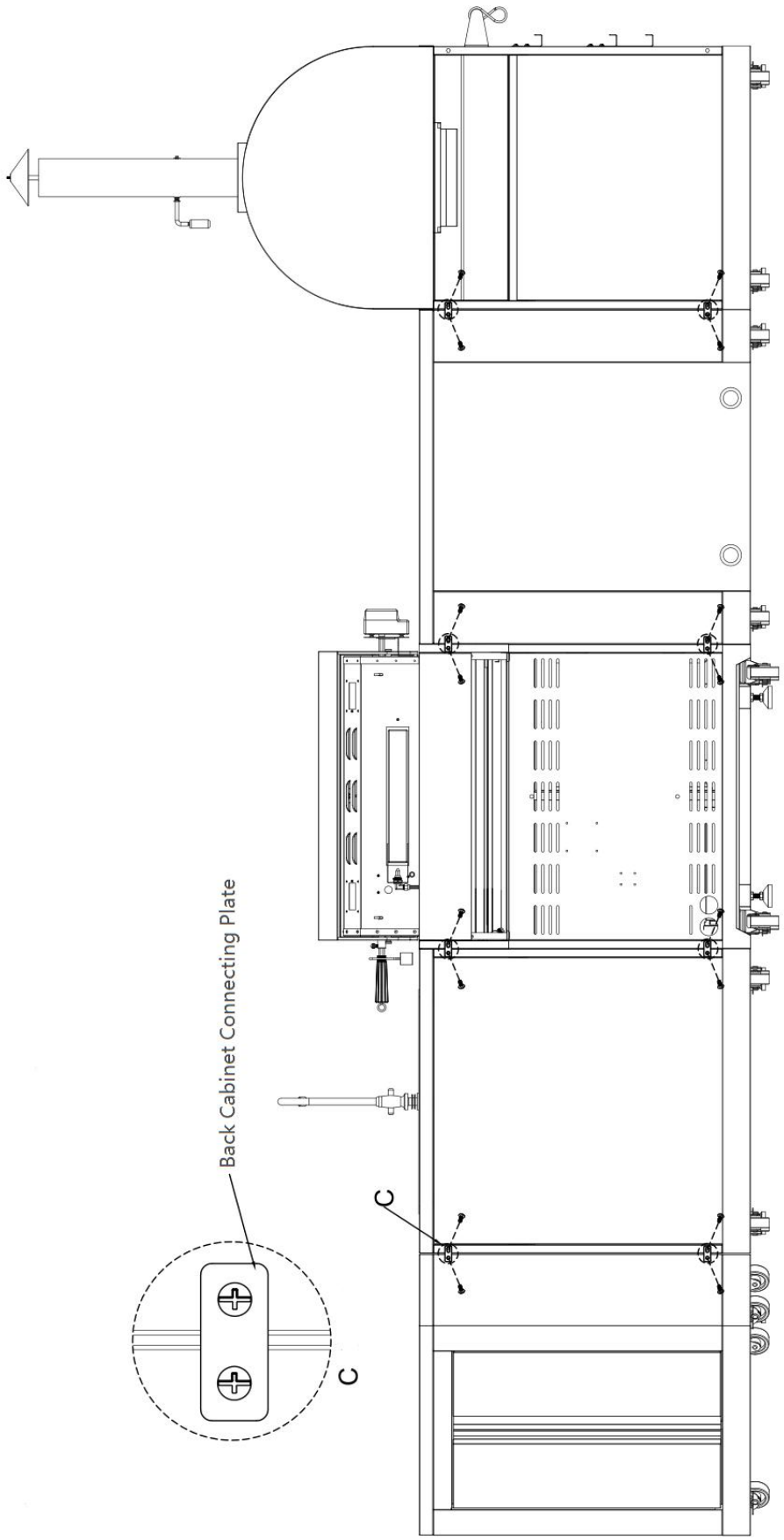

You Thor Kitchen Outdoor Cabinet could be connected with any other Thor Kitchen Our Door Cabinet models.

For Back Panel Connections, use Back Cabinet connecting plate with 2 pcs ¼" screws (Part # 06.02.00093-000-A0) to connect both Cabinets.

service@thorgroup.us +1 877-288-8099

Your Thor Kitchen Appliance Cabinet is compatible with below Thor Kitchen Outdoor Appliances. Please contact your dealer for product inquiries or email sales@thorgroup.us.

Model # TRF2401U (Outdoor Two-drawer under cabinet refrigerator)

Model# :TRF2401U

Product Description: THOR Kitchen 24 inch Indoor/Outdoor Undercounter Refrigerator Drawer



Refrigerator Size	**24''**	Number of Drawer	**2**
Product Width(in)	**23.5 inch**	Minimum Side Air Clearance (In)	**0.8 inch**
Product Depth(in)	**23.4 inch**	Minimum Back Air Clearance (In)	**2 inch**
Product Height(in)	**34.2 inch**	Gross Weight(lb.)	**126 lb**
Depth Excluding Handles(in)	**25.9 inch**	Net Weight(lb.)	**114 lb**
Depth Including Handles	**23.4 inch**	Temperature Range	**34-46℉**
Depth without Door	**21.4 inch**	Color/Finish	**Black cabinet, stainless steel door**
Depth with Door Open 90 Degrees	**NA**	Certifications	**ETL**
Height to Top of Door Hinge	**34.2 inch**	UPC #	**6926697015643**
Height to Top of Case	**34.2 inch**	Refrigerator Capacity	**152 L**
Refrigerator Type	**R600A**	Features	**Next Page**

Model# :TRF2401U

Features	• **Convection cooling system provides a quick cool down and consistent temperature** • **Digital touch pad control with blue LED display** • **Stainless steel cabinet** • **Bright white LED light for both drawers** • **Two full-extension stainless steel drawer** • **Built-in or freestanding** • **Four adjustable leveling legs** • **Available for both Indoor/Outdoor** • **Noise Level:41db** • **Anti-fingerprint surface** • **Stainless-steel basket and Silicone pad available**

Temp range	**34-46℉**	**Outdoor or indoor**	**Indoor and Outdoor**
LED light	white led light	Shipping Dimension	25.3”(W)X26”(D)X35.5”(H)







service@thorgroup.us +1 877-288-8099

Model # TWC2401DO (Outdoor Wine Cooler)

THOR KITCHEN

Model# TWC2401DO

Product Description: 24-inch Outdoor Dual Zone Wine Cooler



Wine Cooler Size	**24''**	**Number of Shelves**	**5+1**
Product Width(in)	**23.43**	Wine Cooler Shelf Material	**Beech wood**
Product Depth(in)	**23.82**	Number of Doors	**1**
Product Height(in)	**34.25**	Temperature Range (F)	**41-64°F / 5-18°C**
Depth Excluding Handles(in)	**23.82**	Color/Finish	**S.S housing and S.S. door trims**
Depth Including Handles	**25.39**	Type of Cooling Unit	**No Frost**
Depth without Door	**22.05**	Voltage(volts)	**110V-120V/60Hz**
Depth with Door Open 90 Degrees	**46.06**	Gross Weight (lb.)	**152**
Height to Top of Door Hinge	**34.25**	Net Weight (lb.)	**130**
Wine Cooler Type	**Built-in or Freestanding, indoor or outdoor use**	Certifications	**Residential ETL/CEC**
Adjustable Racks	**No (with rolling slideways)**	UPC #	**6926697022221**
Bottle Capacity	**46**	Shipping Dimension	**H39.69*W29.72*D30.16in**
Defrost Type	**Automatic**	Features	**See next page**







Features:
-46 bottles capacity (5.43 cu.ft.)
-Indoor or outdoor use wine cooler
-Thunder proof and waterproof
-Independent dual zone (each zone reach 41°F - 64°F)
-Fan assisted cooling
-Seamless S.S door frame (60mm) with S.S. handle(304SS)
-SS Compressor Rear Cover (304SS)
-Dual pane of Low-E glass to filter UV rays
-Reversible door (180° flip-over)
-S.S. exterior housing and rear plate (304SS)
-S.S. vent kickplate
-5+1 beech wood rolling shelves with rolling slideways(Full Extension)
-LCD display with 2pcs **blue** lightings on top
-Adjustable electronic touch control C° or F°
-Door opening alarm
-Temperature alarm
-Activated charcoal filters (2pcs)
-Heating elements for winter function
-4pcs adjustable feet
-4pcs casters available for an additional cost
-No frost
-2pcs evaporators for accurate temperature control
-Self contained condenser
-Refrigerant: R600a

service@thorgroup.us +1 877-288-8099

THOR KITCHEN OUTDOOR Pizza Oven Cabinet Installation Manual

MODEL# MK07SS304

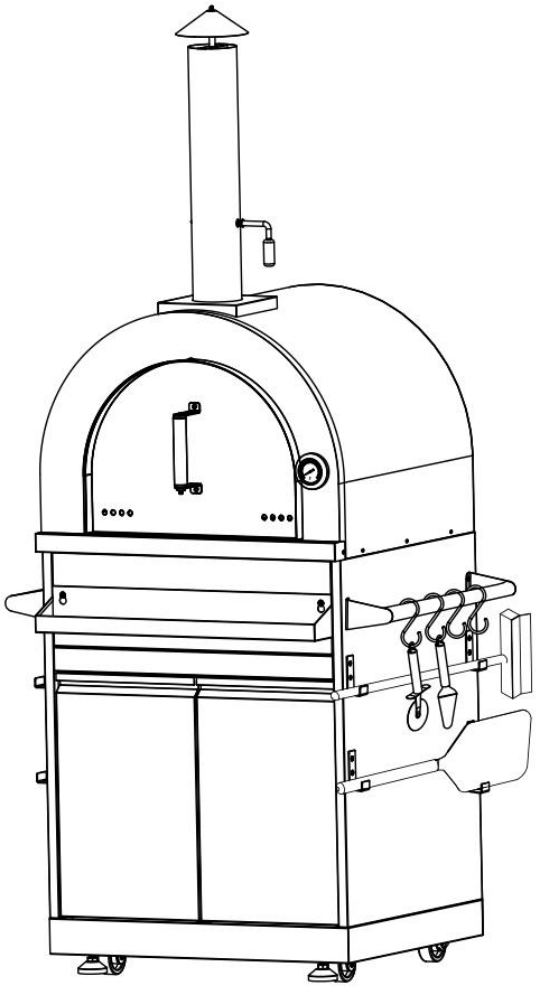

IMPORTANT:

Save for electrical inspector's use.
Installer: Leave installation instructions with the homeowner.
Homeowner: Keep installation instructions for future reference.

Welcome

Thank you for purchasing your Thor Kitchen Appliance! We appreciate your business and we recommend that you read this entire User's Manual before operating your new appliance for the first time.

This manual contains instructions on how to properly install and set up your new range, as well as insights into the unique features that our product offers. Please keep this manual for future reference, as it contains answers to questions that you might have as you begin to cook.

For any inquiries, please reach our customer service support at +1 877-288-8099 at our business hours or email service@thorgroup.us.

Thank you,

Thor Group

This manual applies to the following models' series:

Model # MK07SS304 (Outdoor Pizza Oven Cabinet)

service@thorgroup.us +1 877-288-8099

Parts Explosive Pictures

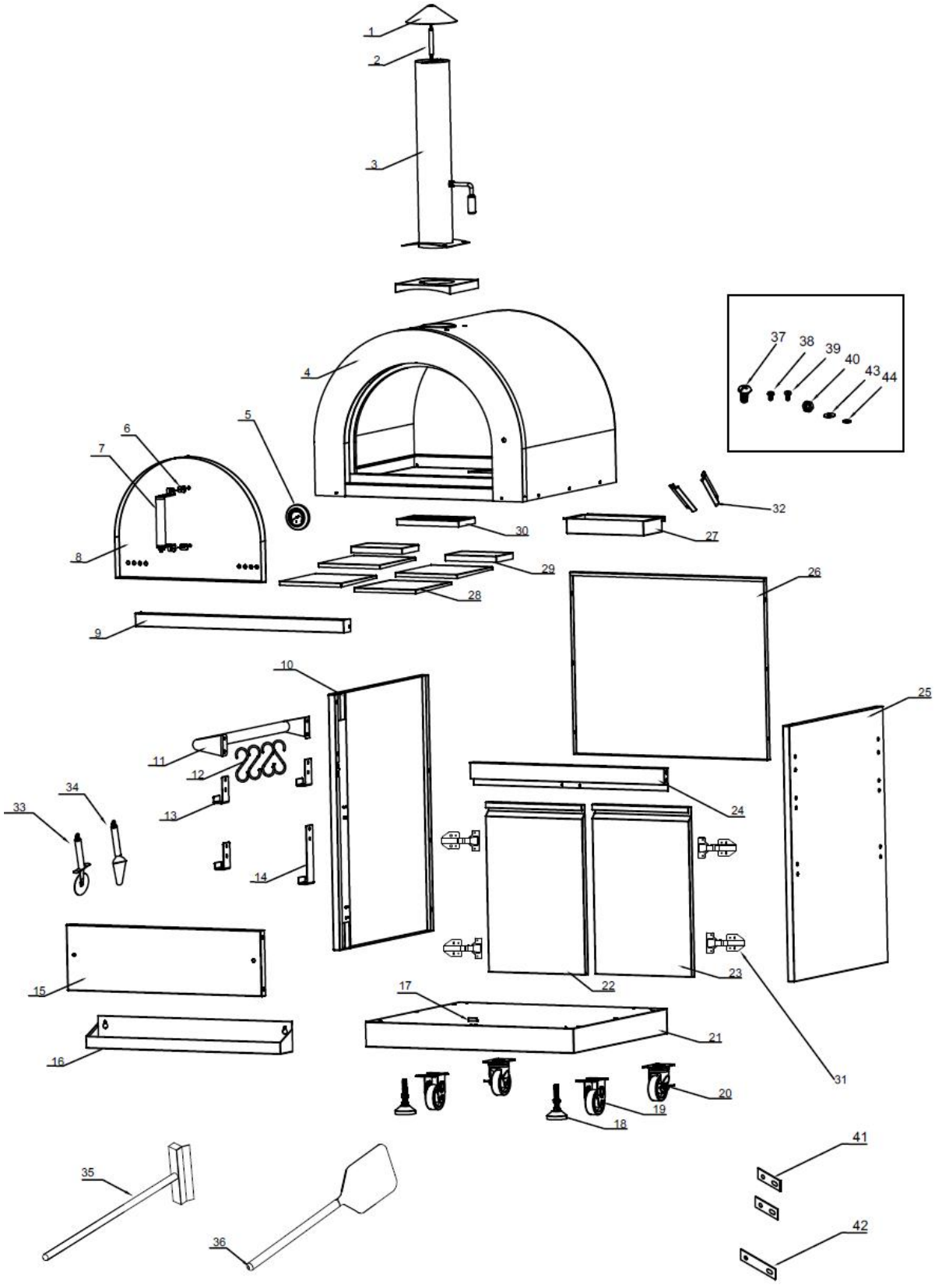

Parts List

If you are missing any part, please contact Thor Kitchen Customer Service Department at 877-288-8099 at business hours, or email service@thorgroup.us for help.

Explosive #	Part #	Part Name	Quantity
1	05.99.000119-000-A0	Chimney coping	1
2	05.19.008003-000-A0	Chimney supporting rod	1
3	22.99.009241-000-A0	Chimney pipe assembly	1
4	22.99.009239-000-A0	Pizza oven cavity	1
5	05.99.008024-000-A0	Thermometer	1
6	06.04.000377-000-A0	Mica plate 1	4
7	22.99.009243-000-A0	Pizza oven door handle assembly	1
8	20.01.008025-000-A1	Pizza oven door assembly	1
9	20.01.008022-000-A1	Beam welding assembly	1
10	20.01.008018-000-A0	Cabinet left side panel	1
11	20.99.000287-000-A0	Left/Right handle welding assembly	1
12	05.99.000202-000-A0	S-shape Pothook	1
13	04.02.002641-000-A0	Pothook 1	3
14	04.02.002642-000-A0	Pothook 2	1
15	20.01.008023-000-A0	Cabinet top panel welding assembly	1
16	20.01.008035-000-A0	Condiment storage welding assembly	1
17	04.01.002596-000-A1	Kick panel plate	1
18	05.01.008004-000-A0	Supporting leg	2
19	05.10.000122-000-A0	Fixed caster	2
20	05.10.000123-000-A0	Universal caster with brake	2
21	20.01.008076-000-A0	Cabinet bottom panel welding assembly	1
22	22.99.009235-000-A0	Left door assembly	1
23	22.99.009234-000-A0	Right door assembly	1
24	20.01.008022-000-A1	Beam welding assembly	1
25	20.01.008019-000-A0	Cabinet right side panel welding assembly	1
26	20.01.008020-000-A0	back panel welding assembly	1
27	20.01.008006-000-A0	Ash pan welding assembly	1
28	15.99.000002-000-A0	Cordierite firebrick B	4
29	15.99.000001-000-A0	Cordierite firebrick A	2
30	04.01.008019-000-A1	Net Cover	1
31	05.03.008001-000-A0	Door hinge	4
32	04.01.008021-000-A0	Ash pan holder	2
33	05.99.000199-000-A0	Pizza wheel	1
34	05.99.000198-000-A0	Pizza cutter	1

35	05.99.000200-000-A0	Pizza oven brush	1
36	05.99.000201-000-A0	Large pizza oven shovel	1
37	06.02.000093-000-A0	¼” Philips thumb head screw with anti-slip design	65
38	06.10.000042-000-A0	Philips thumb head screw	2
39	06.11.008056-000-A0	flat head screw	24
40	06.09.000099-000-A0	1/4" nut	3
41	04.01.002580-000-A0	cabinet back connecting plate	2
42	04.01.002579-000-A0	cabinet front connecting plate	1
43	06.04.000030-000-A0	¼” flat gasket	3
44	06.09.000099-000-A0	¼” spring washer	2

Product Dimension

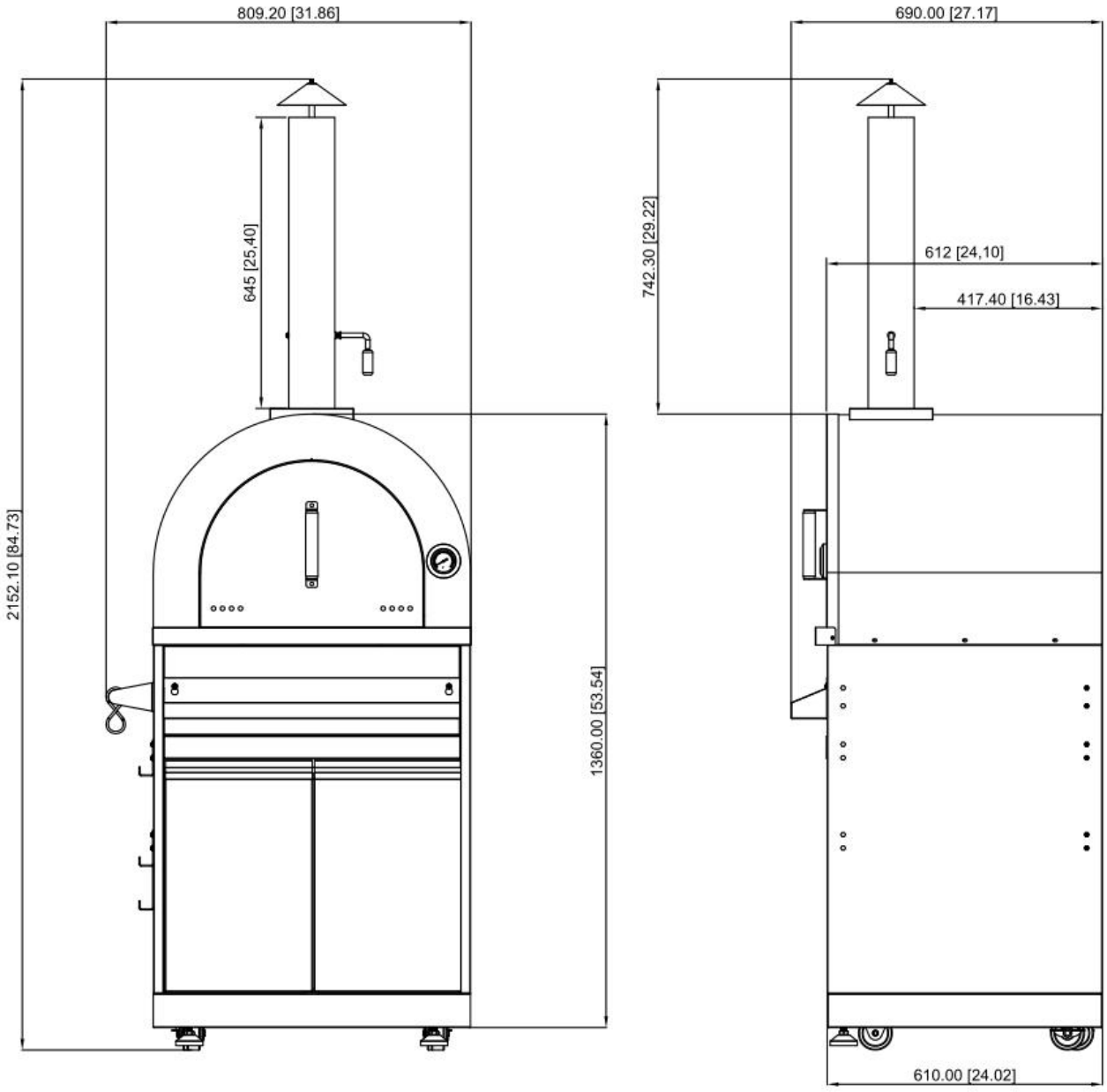

Cabinet Installation

Step 1

1. Install 2 pcs supporting legs (Part # 18) to bottom welding part (Part # 21) and adjust the supporting legs to suitable position;
2. Use 16 pcs ¼" flat Philip's screw head (Part # 37) to connect 2 pcs fixed casters (Part # 19) and 2 pcs universal casters with brake (Part # 20) to Part #21;

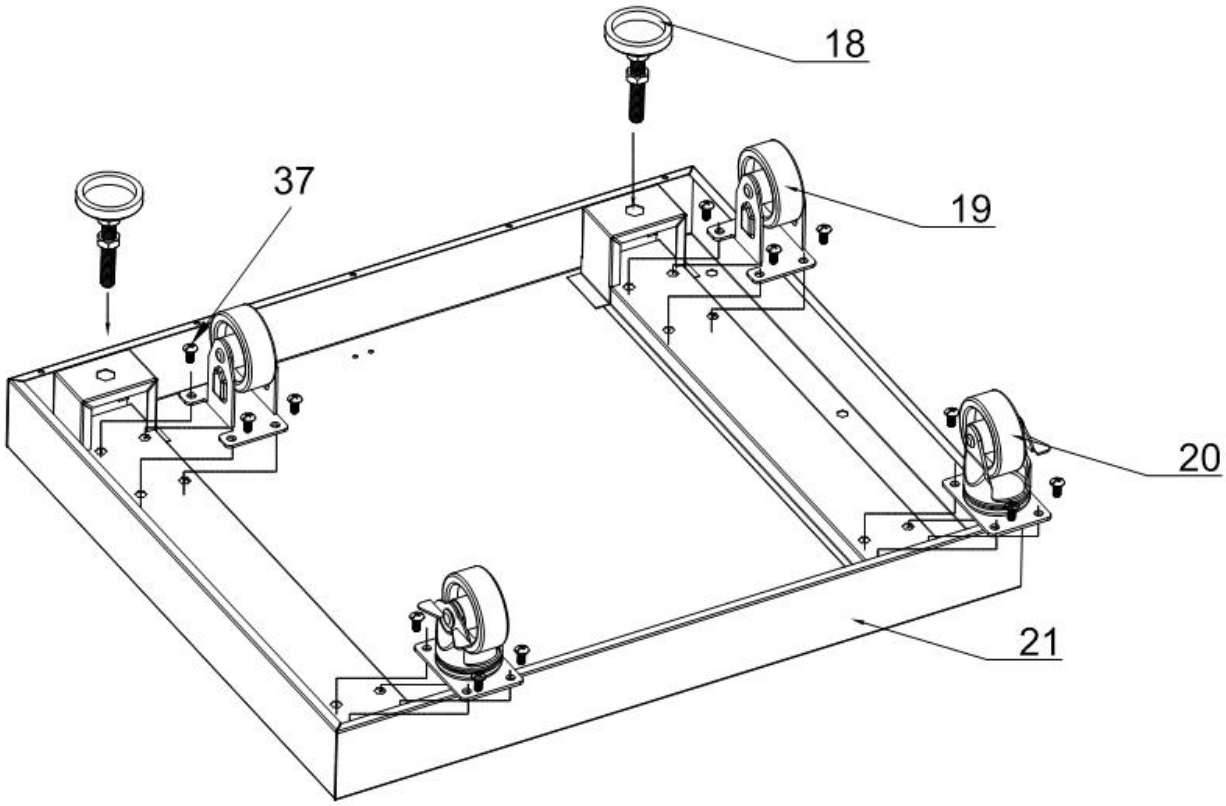

Step 2

1. Use 2 pcs Philips thumb head screw (Part # 38) to install Kick panel plate (Part # 17) to Part # 21;
2. Use 3 pcs ¼" flat Philip's screw head (Part # 37) to connect left side panel (Part # 10) to Part # 21;
3. Use 3 pcs Part # 37 to connect right side panel (Part # 25) to Part # 21;
4. Use 8 pcs Part # 37 to connect back panel (Part # 26) to Part #21, # 10 and #25;
5. Make sure all the connections are smooth, Do not over-tighten all the screws until parts are lined up.

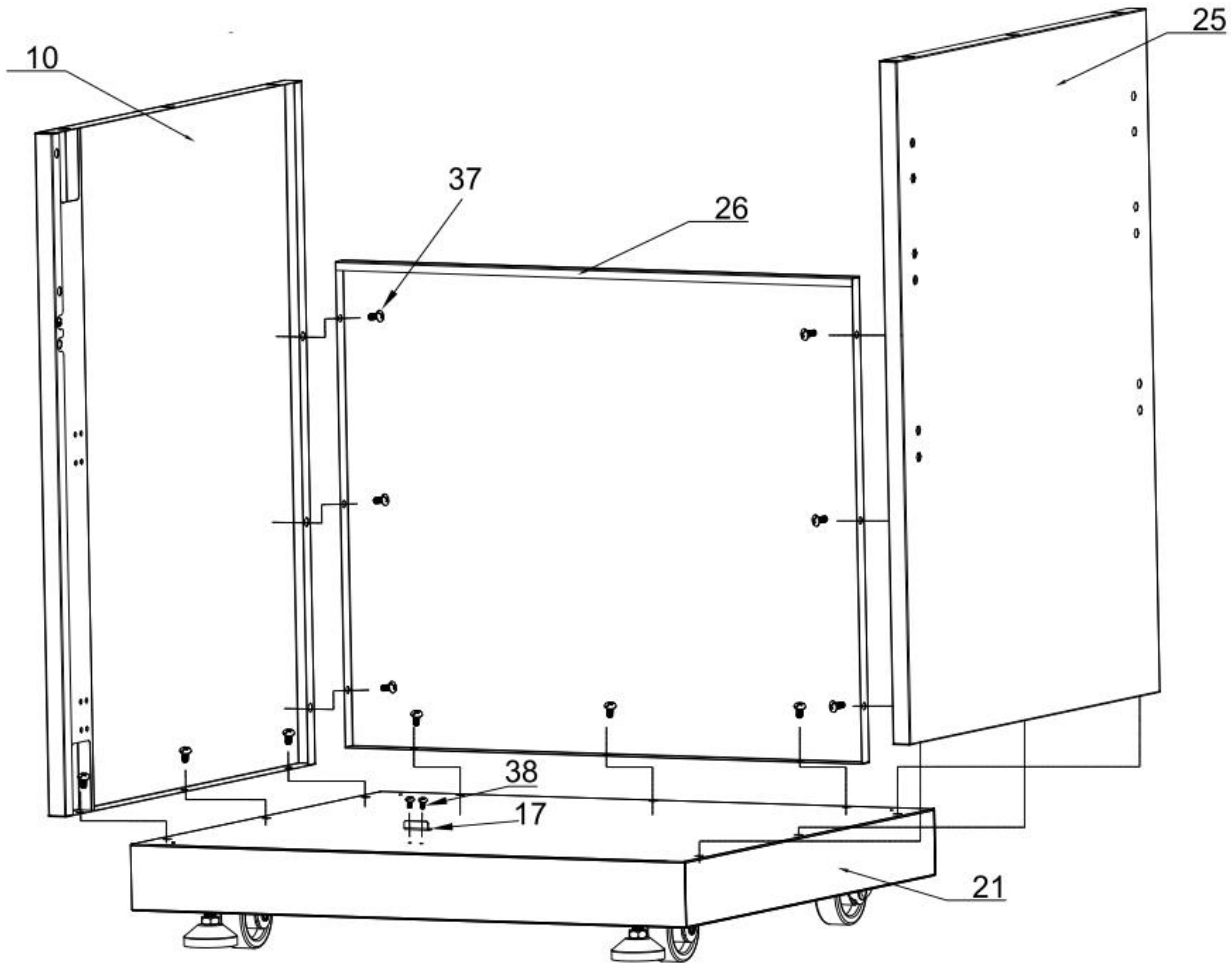

Step 3

1. Use 4 pcs Part # 37 to connect beam welding part (Part # 24) to Part # 10 and Part # 25;
2. Use 4 pcs Part # 37 to connect top cover welding part (Part # 15) to Part # 10 and Part # 25;

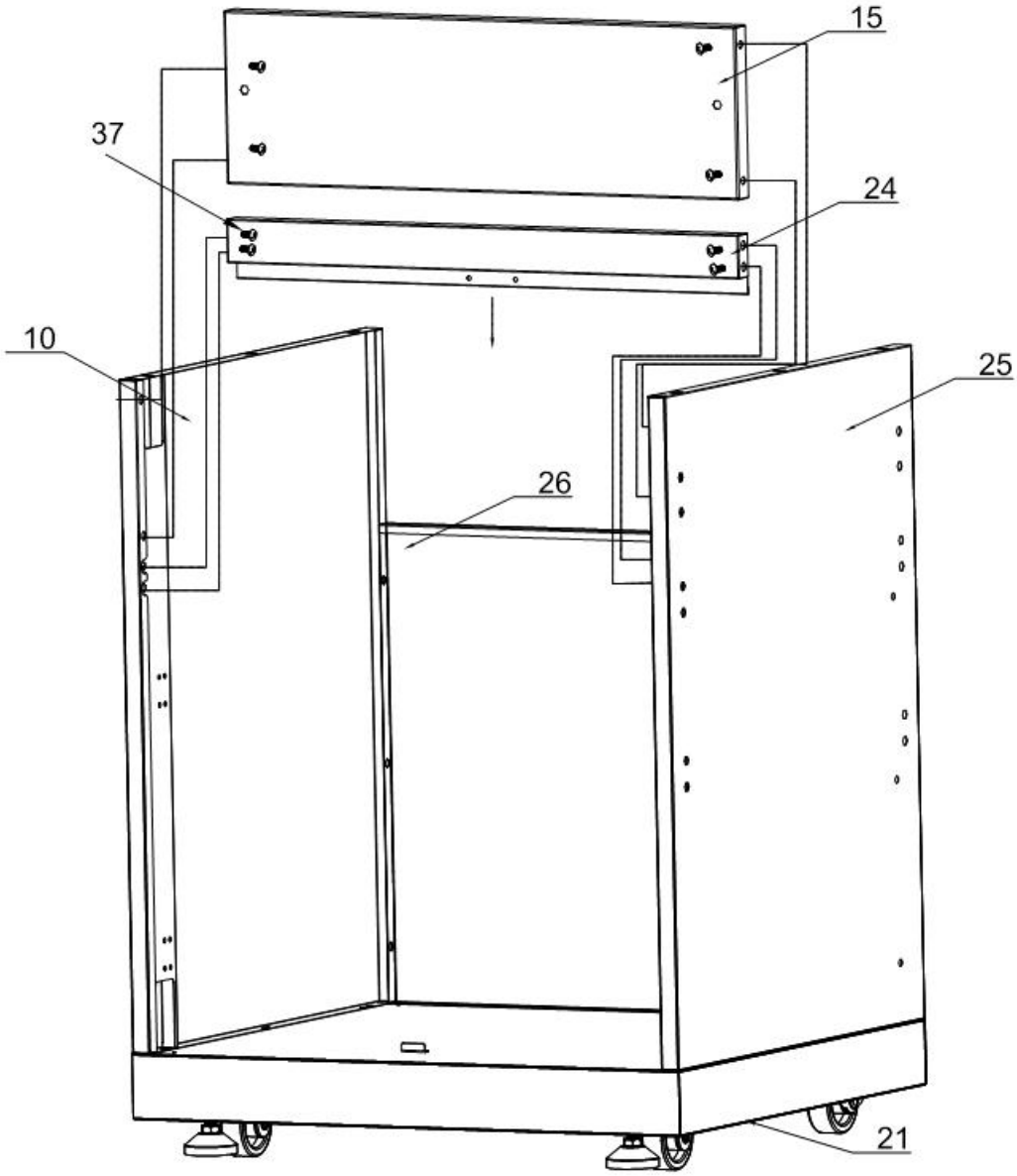

Step 4

1. Make sure all the connections are smooth and the design is looking like below picture.

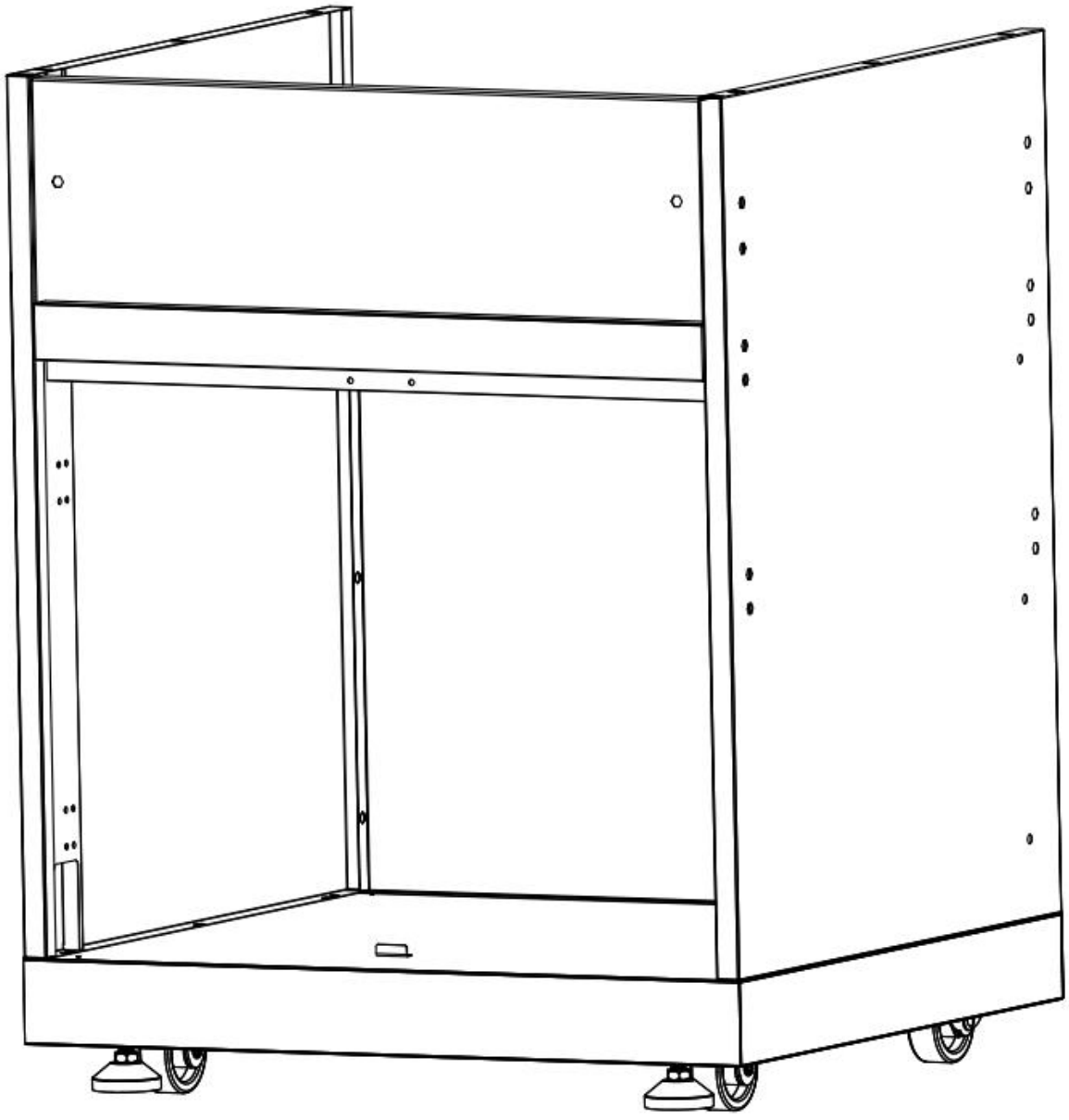

Step 5

1. Use 2 pcs ¼” 14” screw (Part # 37) to go through the two holes on Pizza oven door handle assembly (Part # 67), then go through 4 pcs mica plates (Part # 6), 2 pcs ¼” flat gasket (Part # 43), 2 pcs ¼” spring gasket (Part # 44), and 2 pcs ¼” hexagon nut (Part #40) to install Part # 7 to Pizza oven door assembly (Part # 8).

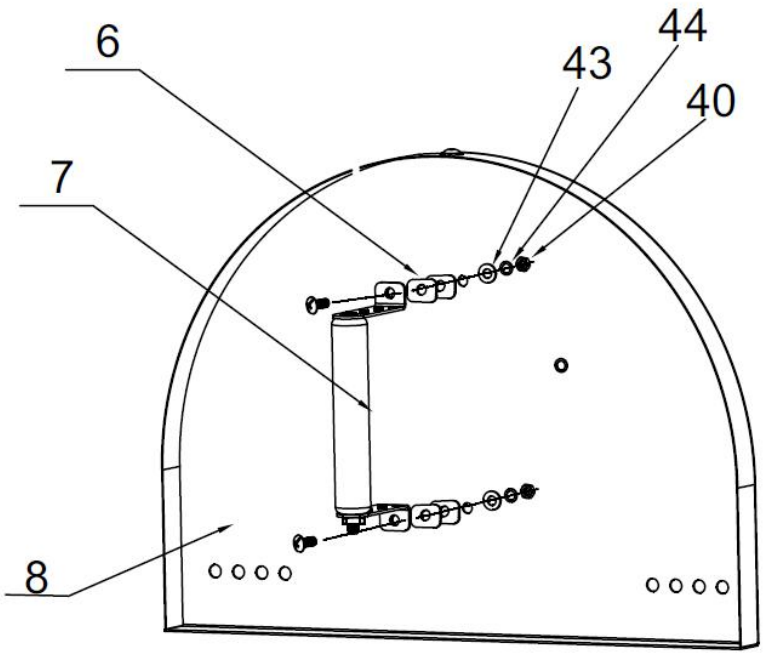

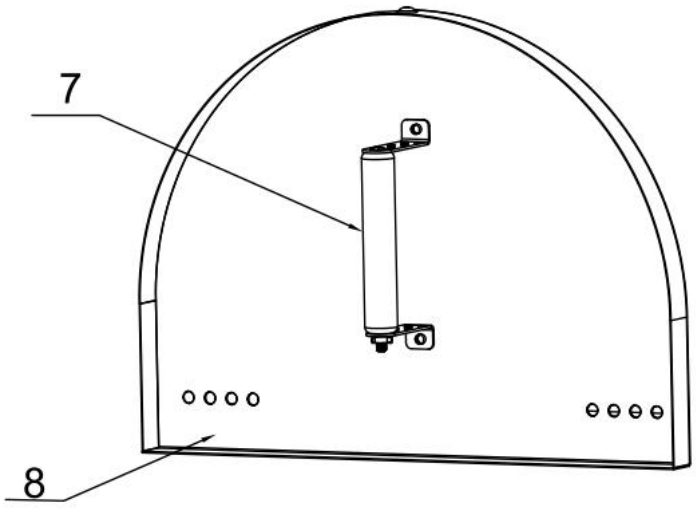

2 pcs 1/4 14" screw

4 pcs mica plate

2 pcs 1/4" flat gasket

2 pcs 1/4" spring gasket

2 pcs 1/4" hexagon nut

Step 6

1. Use 4 pcs ¼” Philips thumb head screw with anti-slip design (Part # 37) to put 2 pcs ash pan holder (Part # 32) to the back of Pizza oven cavity (Part # 4);
2. One part # 32 are installed, install ash pan welding assembly (Part # 27).

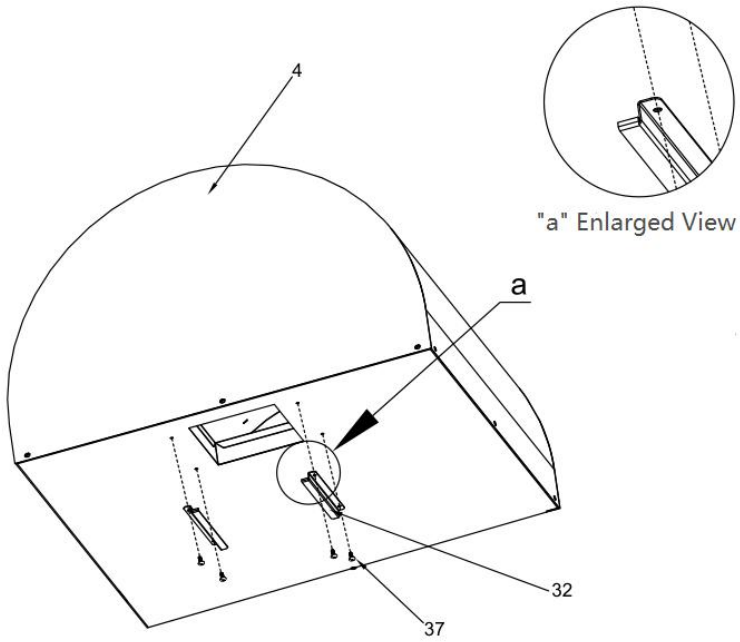

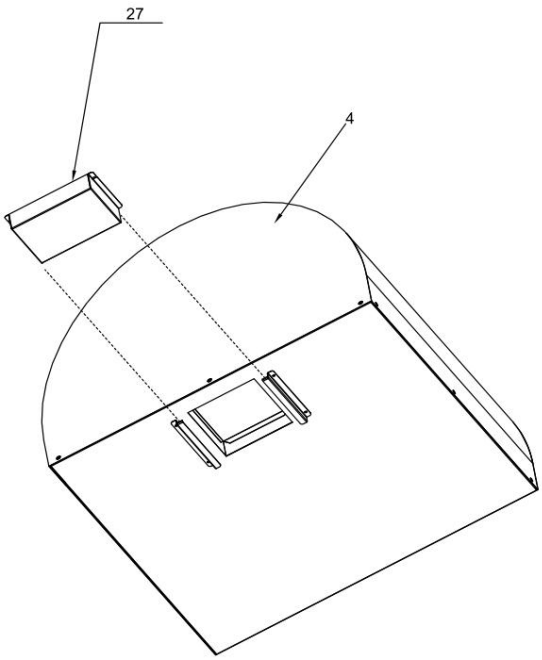

Step 7

1. Use 1 pc ¼" nut (Part # 40) and 1 pc ¼" flat gasket (Part # 43) to connect chimney coping (Part # 1) to chimney supporting rod (Part # 2)
2. Install Part # 1 and # 2 to the top of Chimney Pipe Assembly (Part # 3);
3. Use 4 pcs ¼" flat Philip's screw head (Part # 37) to connect Part # 3 to Pizza Oven Cavity (Part # 4)

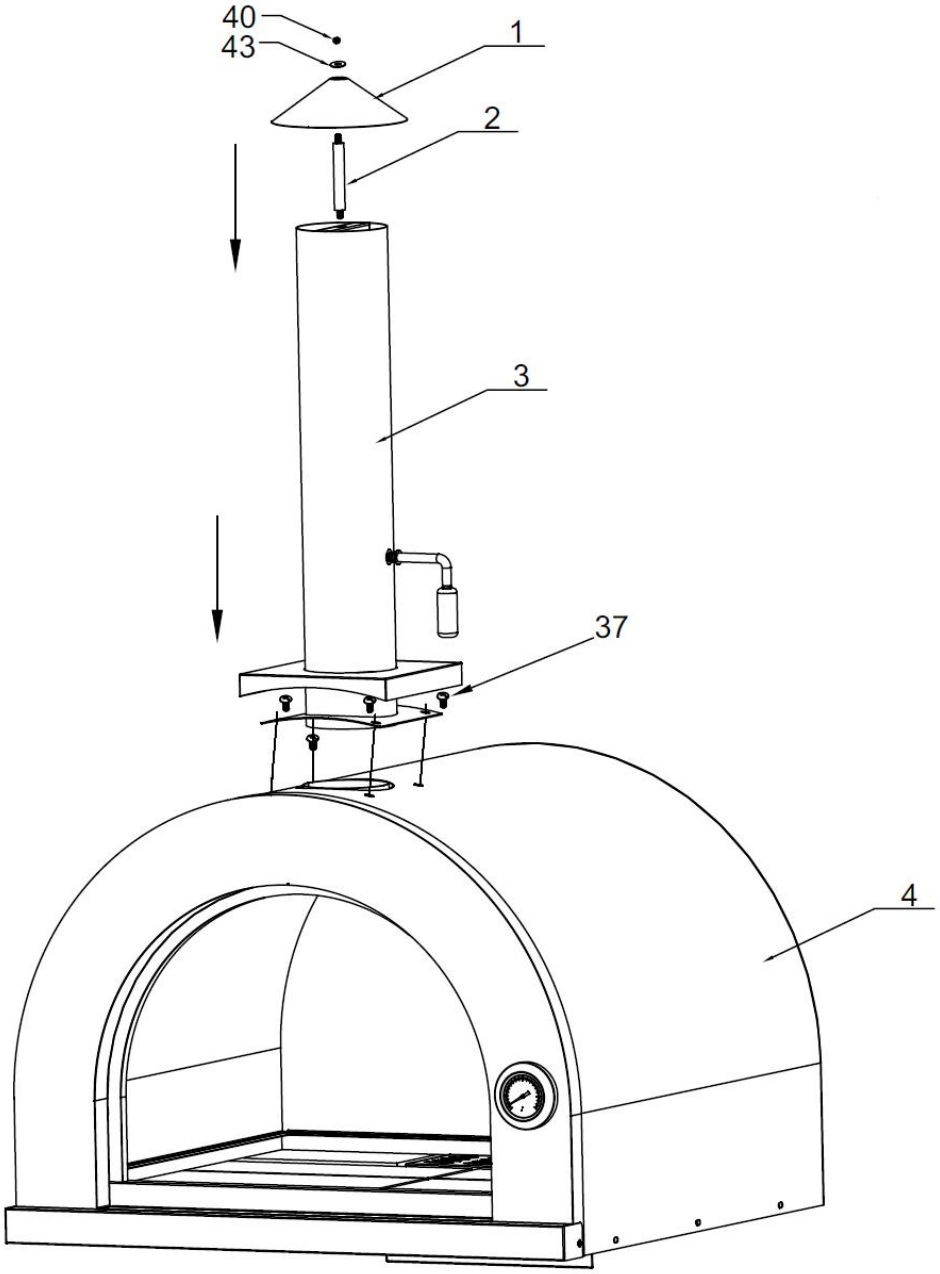

Step 8

1. Put 4 pcs Cordierite Brick B (Part # 28), 2 pcs Cordierite Brick A (Part # 29) and 1 pc net cover (Part # 30) inside Pizza oven Cavity (Part # 4)
2. Insert Pizza oven door assembly (Part #8) into designated position on Part # 4.
3. **Maximum Temperature inside the Pizza Oven Cavity is 800 F.**

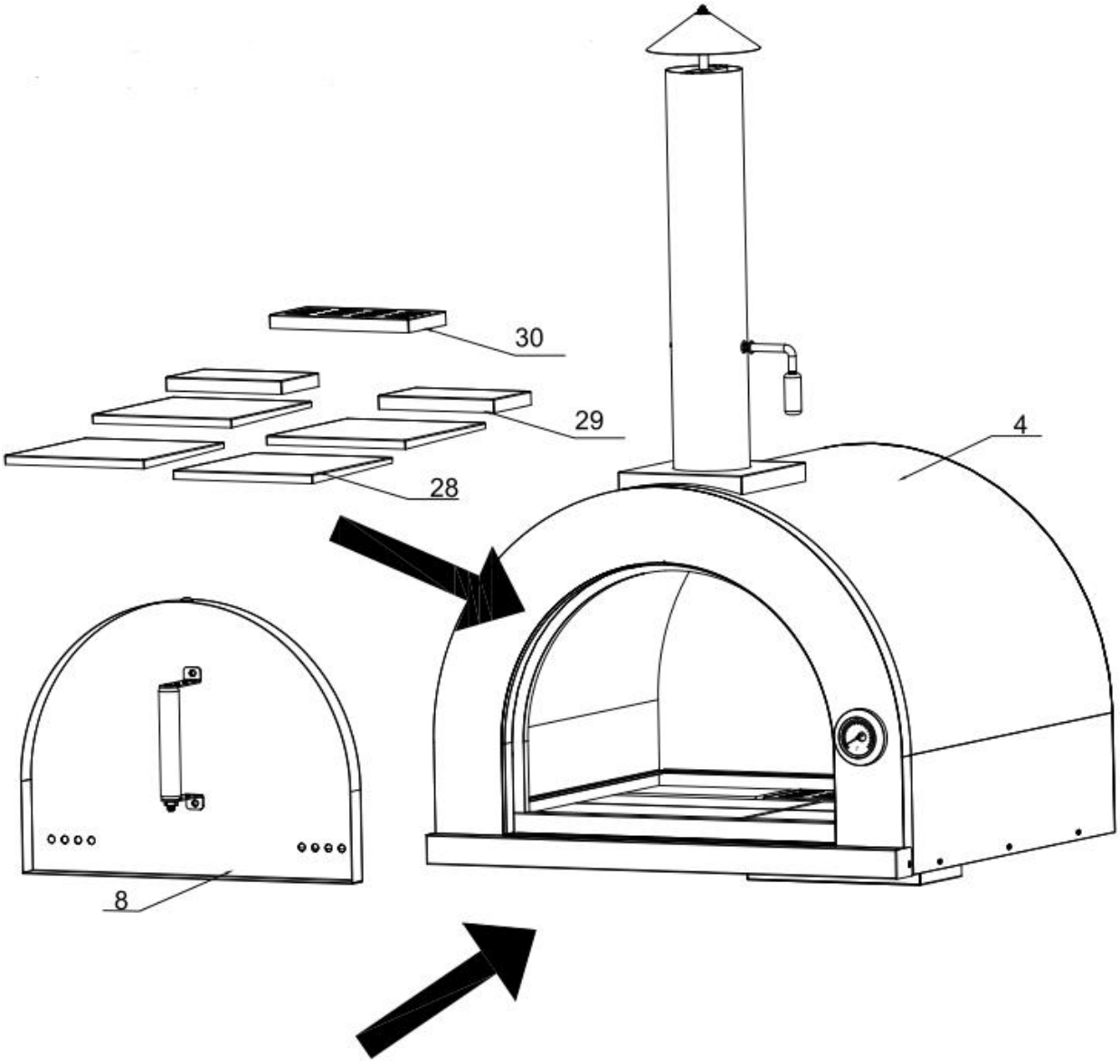

Step 9

1. Use 6 pcs ¼” Philips thumb head screw with anti-slip design (Part # 37) to install Pizza oven cavity (Part # 4) to Cabinet left side panel (Part # 10) and Cabinet right panel (Part # 25). Make sure the connection is smooth;
2. Do not over-tighten all the screws until parts are lined up.

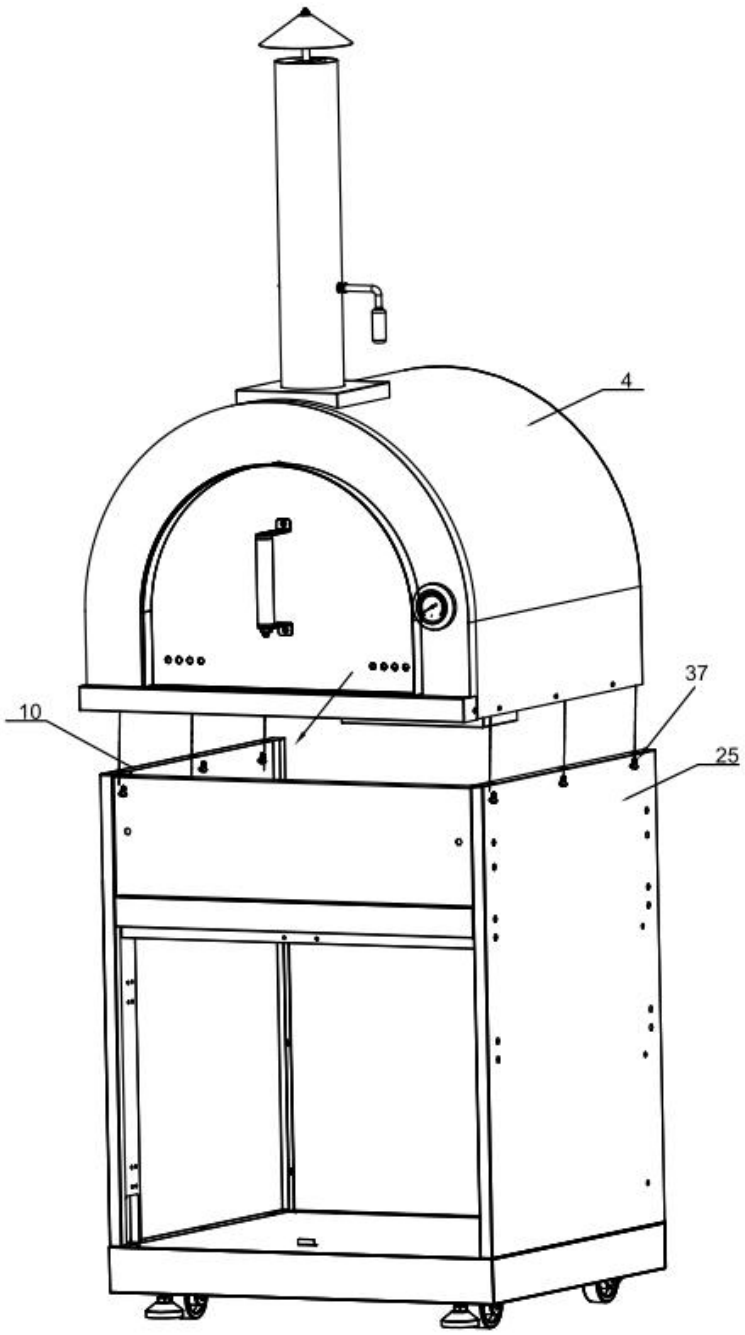

Step 10

1. Use 2 pcs Part # 37 to connect condiment storage welding assembly (Part # 16) to front panel assembly (Part # 15);
2. Use 24 pcs Parts # 39 to install door hinge (Part # 31) Part # 22 with Part # 10, and Part # 23 with Part # 25;
3. Connect Part # 22 with Part # 10 and connect Part # 23 with Part # 25;
4. Do not over-tighten all the screws until parts are lined up.

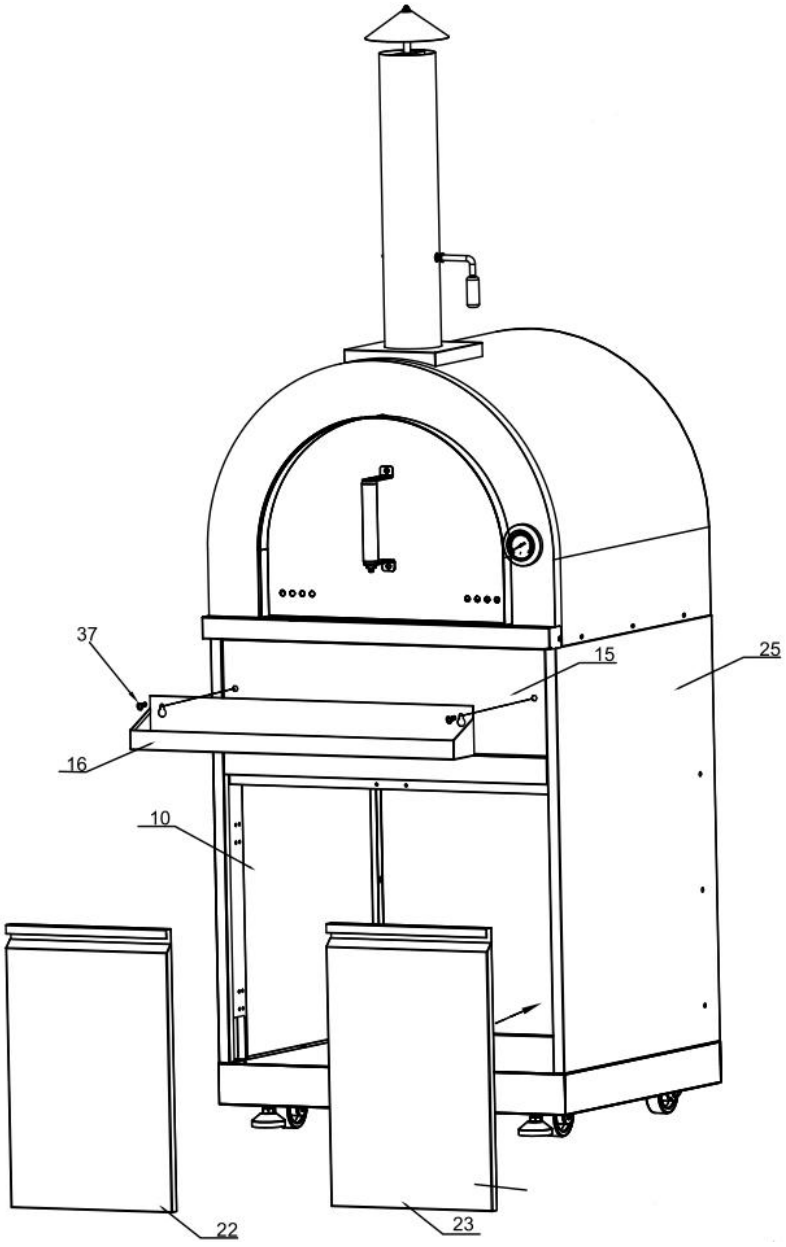

Detailed Installation Pictures for Door hinge is shown below:

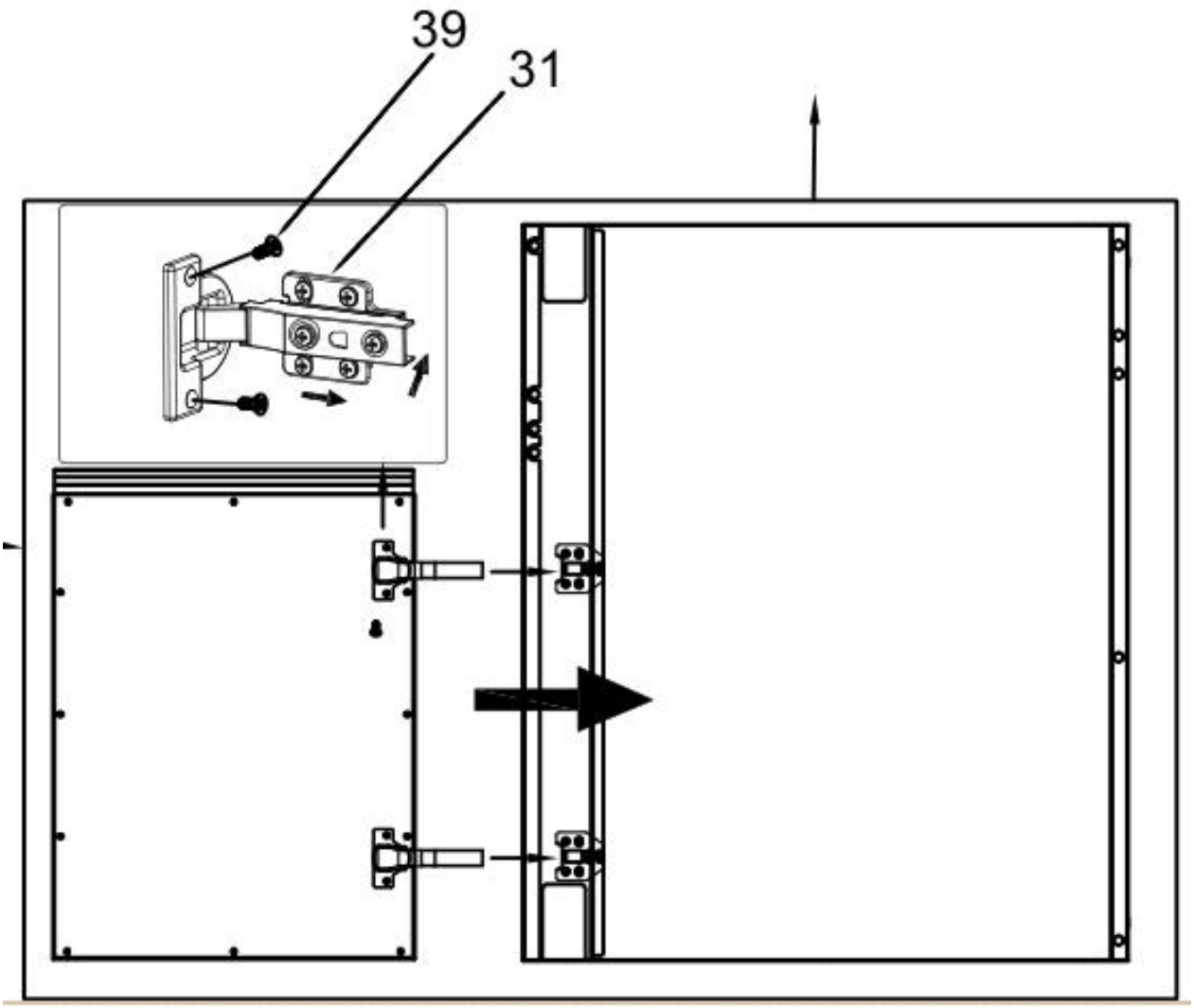

Step 11

1. Use 4 pcs Part # 37 to connect Left handle welding assembly (Part # 11) to Left side panel (Part # 10), then put S-shape pothook (Part # 12) on Part # 11;
2. Use 8 pcs Part # 37 to connect side panel hook 1 (Part # 13) and side panel hook 2 (Part # 14) to the left panel (Part # 10);
4. Part # 11, # 12, # 13 and # 14 could be installed on the right panel of pizza oven cabinet (Part #2 5) if needed. Please make sure the connections are smooth.

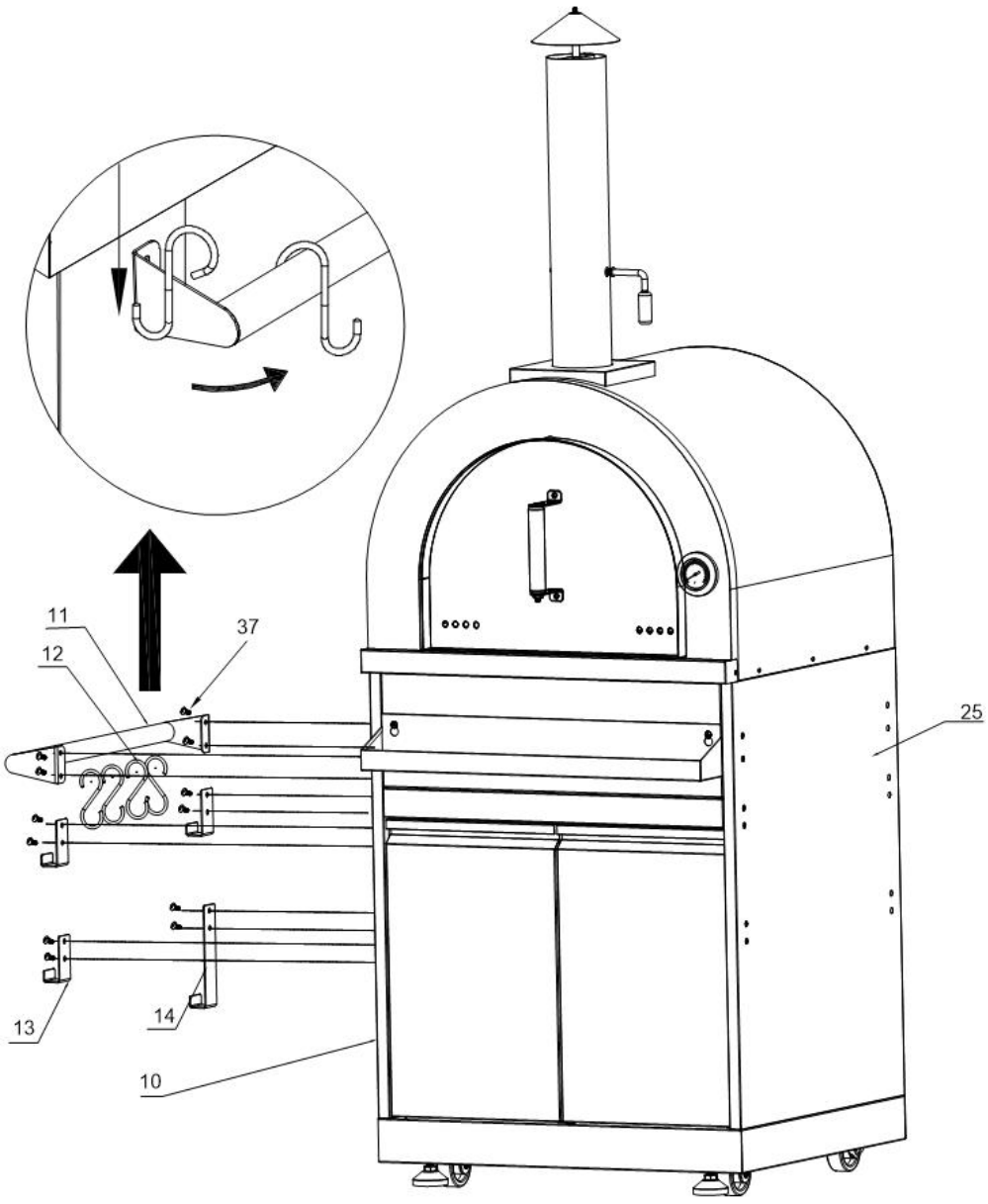

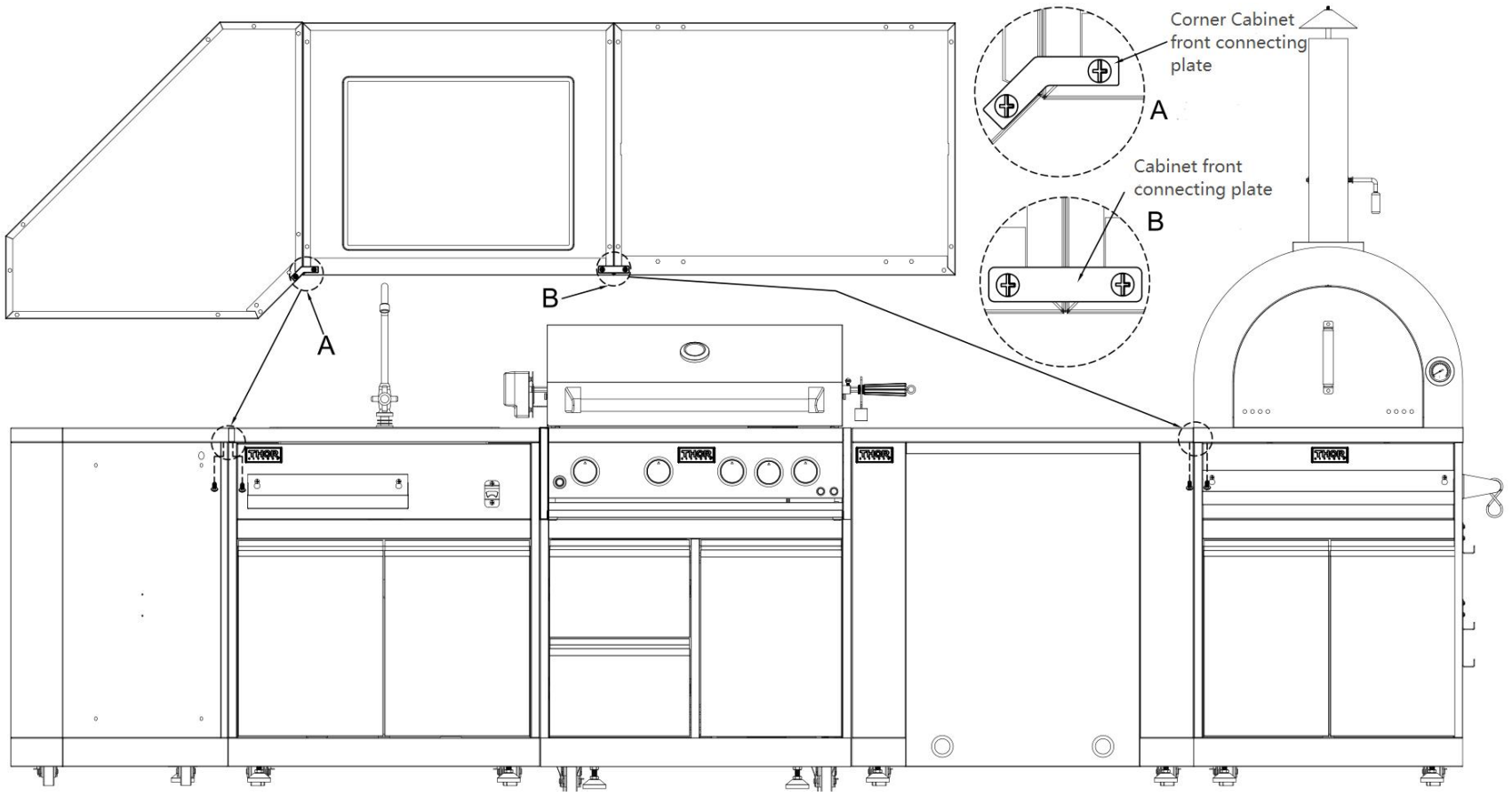

You Thor Kitchen Outdoor Cabinet could be connected with any other Thor Kitchen Our Door Cabinet models.

If you are having a Corner Cabinet and you would like to connect it to another cabinet, use corner cabinet connecting plate with 2 pcs ¼" screws (Part # 06.02.00093-000-A0) to connect both cabinets;

If you are having a Sink Cabinet, Appliance Cabinet or Pizza oven Cabinet, use cabinet connecting plate with 2 pcs ¼" screws to connect both cabinets.

service@thorgroup.us +1 877-288-8099

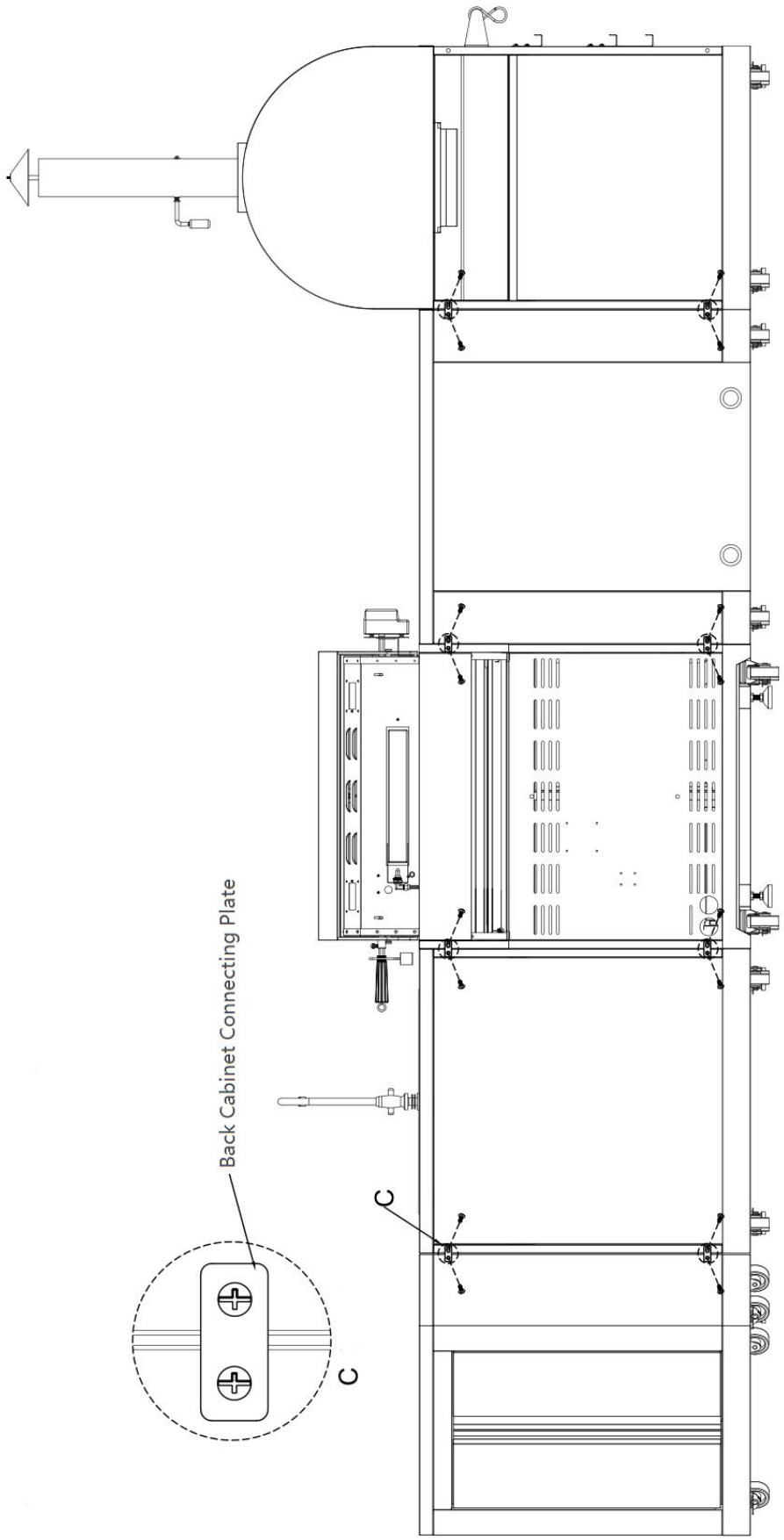

You Thor Kitchen Outdoor Cabinet could be connected with any other Thor Kitchen Our Door Cabinet models.

For Back Panel Connections, use Back Cabinet connecting plate with 2 pcs ¼" screws (Part # 06.02.00093-000-A0) to connect both Cabinets.

Warranty and Service

This product has been manufactured by Thor Group, 4651 E Airport Drive, California 91761

For Customer Service, please call (877) 288 - 8099

For the most up to date warranty and service policy, please refer to our website
WWW.THORKITCHEN.COM/WARRANTY-REGISTRATION

For in-warranty service requests, please visit our website at
WWW.THORKITCHEN.COM/SERVICE

Please Note: You must provide proof of purchase or installation date for any in-warranty service requests

WELCOME TO THE CLUB

You chose THOR Kitchen to enhance your culinary journey and we're stoked to have you in the club. Think of it as a secret society of really savvy people, such as yourself, choosing professional power and performance at an affordable price.

Register your product by following the steps below.

WARRANTY REGISTRATION



Scan theQR code or visit
thorkitchen.com/warranty



Input your product info
and select register



You're done.
Let's get cookin'.

For additional information and product support, visit thorkitchen.com/service