THOR KITCHEN

GORDON RAMSAY COLLECTION

USE + CARE MANUAL

24 Inch Indoor Outdoor Refrigeration Drawer

RF24U



REV.102025

USE AND CARE MANUAL

24 INCH INDOOR OUTDOOR REFRIGERATOR DRAWER

RF24U

THOR KITCHEN®

TABLE OF CONTENTS

Appliance Safety	**2**
Important Safeguards	**3**
Installation Instructions	**4 - 7**
Before Using Your Appliance	**4**
Installation of Your Appliance	**4**
Site Preparation	**4**
Anti-tip Bracket Installation	**5**
Names Of The Parts	**6**
Specifications	**6**
Leveling the Unit	**7**
Installing Handle	**7**
Electrical Connection	**7**
Extension Cord	**7**
Install Plastic Division Panel	**8**
Operating Your Appliance	**9**
Control Panel	**9**
Defrosting	**9**
Alarm and Error Code	**9 - 10**
Care and Maintenance	**10**
Clearing and Maintaining Your Appliance	**10**
Power Failure	**10**
Vacation Time	**10**
Moving Your Appliance	**10**
Energy Saving Tips	**11**
Troubleshooting	**12**
Warranty	**13**

APPLIANCE SAFETY

Your safety and the safety of others are very important.

We have provided many important safety messages in this manual and on your appliance. Always read and obey all safety messages.



This is the Safety Alert Symbol. The symbol alerts you to potential hazards that can kill or injure you and others. All safety messages will follow the Safety Alert Symbol and either the word DANGER or WARNING.

DANGER

DANGER means that failure to heed this safety statement may result in severe personal injury or death.

WARNING

WARNING means that failure to heed this safety statement may result in extensive product damage, serious personal injury, or death.

All safety messages will alert you about the potential hazard, tell you how to reduce the chance of injury, and let you know what can happen if the instructions are not followed.

IMPORTANT SAFEGUARDS



Before the appliance is used, it must be properly positioned and installed as described in this manual, so read the manual carefully. To reduce the risk of fire, electrical shock or injury when using the appliance, follow basic precautions, including the following:

⚠ DANGER ⚠

Plug into a grounded 3 prong outlet, do not remove grounding prong, do not use an adapter, and do not use an extension cord.

Replace all panels before operating

It is recommended that a separate circuit serving only your appliance be provided. Use receptacles that cannot be turned off by a switch or pull chain

Never clean appliance parts with flammable fluids. These fumes can create a fire hazard or explosion. And do not store or use gasoline or other flammable vapors and liquids in the vicinity of this or any other appliance. The fumes can create a fire hazard or explosion.

Do not connect or disconnect the electric plug when your hands are wet.

Unplug the appliance or disconnect power before cleaning or servicing. Failure to do so can result in electrical shock or death.

Do not attempt to repair or replace any part of your appliance unless it is specifically recommended in this manual. All other servicing should be referred to a qualified technician.

FOLLOW WARNING CALL OUTS BELOW ONLY WHEN APPLICABLE TO YOUR MODEL

Use two or more people to move and install appliance. Failure to do so can result in back or other injury.

To ensure proper ventilation for your appliance, the front of the unit must be completely unobstructed.

Choose a well-ventilated area with temperatures above 50°F (10°C) and below 100.4 °F (38 °C)

The appliance should not be located next to ovens, grills or other sources of high heat.

The appliance must be installed with all electrical, water and drain connections in accordance with state and local codes. A standard electrical supply (115 V AC only, 60 Hz), properly grounded in accordance with the National Electrical Code and local codes and ordinances, is required

Do not kink or pinch the power supply cord of the appliance.

The size of the fuse (or circuit breaker) should be 1. 3 amperes.

It is important that the appliance be leveled in order to work properly. You may need to make several adjustments to level it.

All installations must be in accordance with local plumbing code requirements.

Make certain that the pipes are not pinched, kinked or damaged during installation.

Check for leaks after connection

Never allow children to operate, play with or crawl inside the appliance.

Do not use solvent-based cleaning agents or abrasives on the interior. These cleaners may damage or discolor the interior.

Use this appliance only for its intended purpose as described in this *Instruction Manual*.

Keep fingers out of the "pinch point" areas. Clearances between the door and cabinet are necessarily small. Be careful closing door when children are in the area.

⚠ DANGER ⚠ ***Risk of child entrapment!***

Child entrapment and suffocation are not problems of the past. Junked or abandoned appliances are still dangerous, even if they will "just sit for a few days"

Before discarding your old refrigerator:

Take off the doors

Leave the shelves in place so that children may not easily climb inside.

- SAVE THESE INSTRUCTIONS -

INSTALLATION INSTRUCTIONS

BEFORE USING YOUR APPLIANCE

Remove the exterior and interior packing.
Before connecting the appliance to the power source, let it stand upright for approximately 24 hours. This will reduce the possibility of a malfunction in the cooling system from handling during transportation.
Clean the interior surface with lukewarm water using a soft cloth.
Install the handle on the door, if it is not already attached (See page 7.)

INSTALLATION OF YOUR APPLIANCE

Your outdoor drawers refrigerator have been designed for both built-in and free standing. When built-in, your refrigerator drawers do not require additional air space for top, side, or rear, The front grille must NOT be obstructed.

Note: It is recommended that you do not install the appliance near an oven, radiator or other heating source. And heat sources may increase electrical consumption. Don't install in a location where the temperature will fall below 50°F (10°C). For best performance, do not install the appliance behind a cabinet door or block the base grille.
Avoid locating the unit in moist areas.
Plug the appliance into an exclusive, properly grounded wall outlet.

SITE PREPARATION

1 Position the unit on a flat, level surface capable of supporting the entire weight of the unit. Remember the unit will be significantly heavier once it is fully loaded.

2 Avoid connecting the unit to a Ground Fault Interruptor (GFI). GFIs are prone to nuisance tripping which will cause the unit to shut down. GFIs are generally not used on circuits which power equipment that must run unattended for long periods of time.

3 The unit must be installed according to your local codes and ordinances.

4 ELECTROCUTION HAZARD!



Electrical Grounding Required - This appliance is equipped with a three prong (grounding) polarized plug for your protection against possible shock hazards.
- NEVER remove the round grounding prong from the plug.
- NEVER use a two-prong grounding adapter.
- NEVER use an extension cord to connect power to the unit.

Where a two-prong wall receptacle is encountered or a longer power cord is required, contact a qualified electrician to have it replaced in accordance with applicable electrical codes.

INSTALLATION INSTRUCTIONS

5 Position the unit to allow free air flow through the front grille.

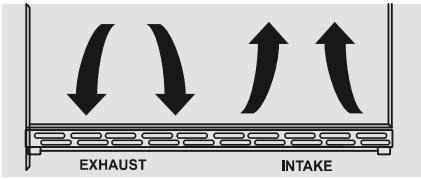

6 Wipe out inside of unit with a damp cloth.

7 Be sure to install the Anti-Tip bracket. Follow the instructions provided with the Anti-Tip bracket kit.

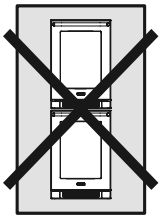



The Anti-Tip Kit must be installed on this unit before it is used. Double stacking units may cause serious personal injury.

ANTI-TIP BRACKET INSTALLATION

To reduce the risk of tipping the unit by abnormal usage or improper loading, the appliance must be secured by properly installing the anti-tip device packed with the appliance.

- Take the fixing bracket (2 pcs) and screws (2 pcs) out of the instruction packet.
- Drill holes into the floor according to the dimensions shown below. This will allow you to fix the brackets to the door. (image1)
- Push the appliance into its place of installation. (image2)
- If the unit is not stable, pull out the appliance and repeat the previous step until the unit is stable.

NOTE: If the unit is relocated, the bracket must be removed and installed in the new location.

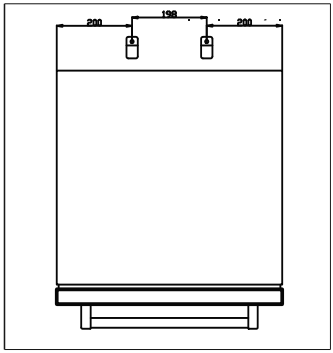

image1

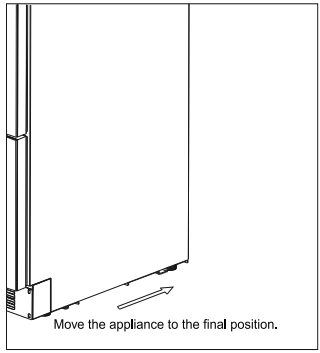

image2

INSTALLATION INSTRUCTIONS

NAMES OF THE PARTS

1) Upper drawer & handle
2) Cabinet
3) Lower drawer & handle
4) Exhaust grill
5) Ventilation Grille

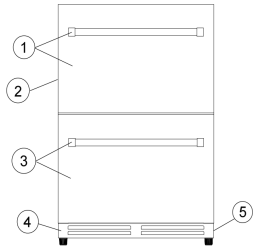

SPECIFICATIONS - Model # RF24U

Product Description	Drawer Refrigerator		
Model No.	RF24U		
Unit Dimensions	Width	Height	Depth (with handles)
	23.6 inch 598mm	34.25 inch 870mm	26.9 inch 682 mm
Net Weight	119 lbs/54kg		

Install the outdoor drawer refrigerator:

Your product has been designed built-in or free standing installation.
Cutout Dimensions
Dimensions of the recess

Height of housing	34 5/8 In	880mm
Depth of housing	25 In	635mm
Width of housing	24 In	610mm

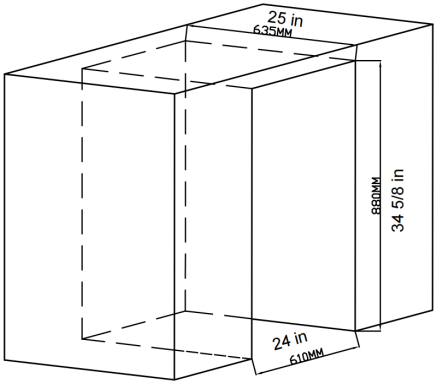

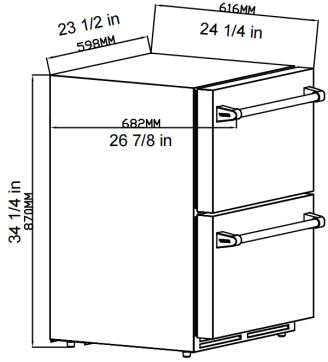

Attention: The ventilator should not be covered, or it will cause unpredictable breakdown; the fan and the return-airway should not be covered, too, or it will cause the temperature of the wine cooler couldn't reach the setting temperature, and the temperature of the cabinet is uneven.

INSTALLATION INSTRUCTIONS

LEVELING THE UNIT

Position the unit on a flat, level surface capable of supporting the entire weight of the unit when full. This unit contains four (4) adjustable leveling legs. Turn the legs clockwise to raise and counterclockwise to lower.

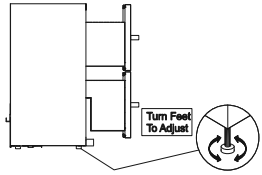

INSTALLING HANDLE

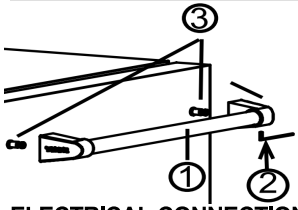

Locate the handle(1) over the pins(3) of the door and tighten the handle by screwing the Allen key grub screws(2).

ELECTRICAL CONNECTION

WARNING

Improper use of the grounded plug can result in the risk of electrical shock. If the power cord is damaged, have it replaced by a qualified electrician or an authorized service center.

This appliance should be properly grounded for your safety. The power cord of this appliance is equipped with a three -prong plug which mates with standard three -prong wall outlets to minimize the possibility of electrical shock

Do not under any circumstances cut or remove the third (ground) prong from the power cord supplied. For personal safety, this appliance must be properly grounded. Any questions concerning power and/or grounding should be directed toward a certified electrician or an authorized service center.

This appliance requires a standard 115/120 Volt AC~60Hz three-prong grounded electrical outlet. Have the wall outlet and circuit checked by a qualified electrician to make sure the outlet is properly grounded. When a standard 2 -prong wall outlet is encountered, it is your responsibility and obligation to have it replaced with a properly grounded 3-prong wall outlet

To prevent accidental injury ,the cord should be secured behind the appliance and not left exposed or dangling.

The appliance should always be plugged into its own individual electrical outlet which has a voltage rating that matches the rating label on the appliance. This provides the best performance and also prevents overloading house wiring circuits that could cause a fire hazard from overheating . Never unplug the appliance by pulling on the power cord. Always grip the plug firmly and pull straight out from the receptacle. Repair or replace immediately all power cords that have become frayed or otherwise damaged. Do not use a cord that shows cracks or abrasion damage along its length or at either end. When moving the appliance, be careful not to damage the power cord.

EXTENSION CORD

Because of potential safety hazards under certain conditions, it is strongly recommended that you do not use an extension cord with this appliance. However, if you must use an extension cord it is absolutely necessary that it be a UL/CUL-Listed, 3-wire grounding type appliance extension cord having a grounding type plug and outlet and that the electrical rating of the cord be 115 volts and at least 1.3 amperes

INSTALLATION INSTRUCTIONS

Installation of Division:

1. Adjust the Division Panel
2. Carefully shape the division panel to match the required form, ensuring not to apply excessive force that could cause damage.
3. Position the Division Panel into the Drawer Slots
4. Gently place the division panel into the designated openings on both sides of the drawer, ensuring it fits securely.

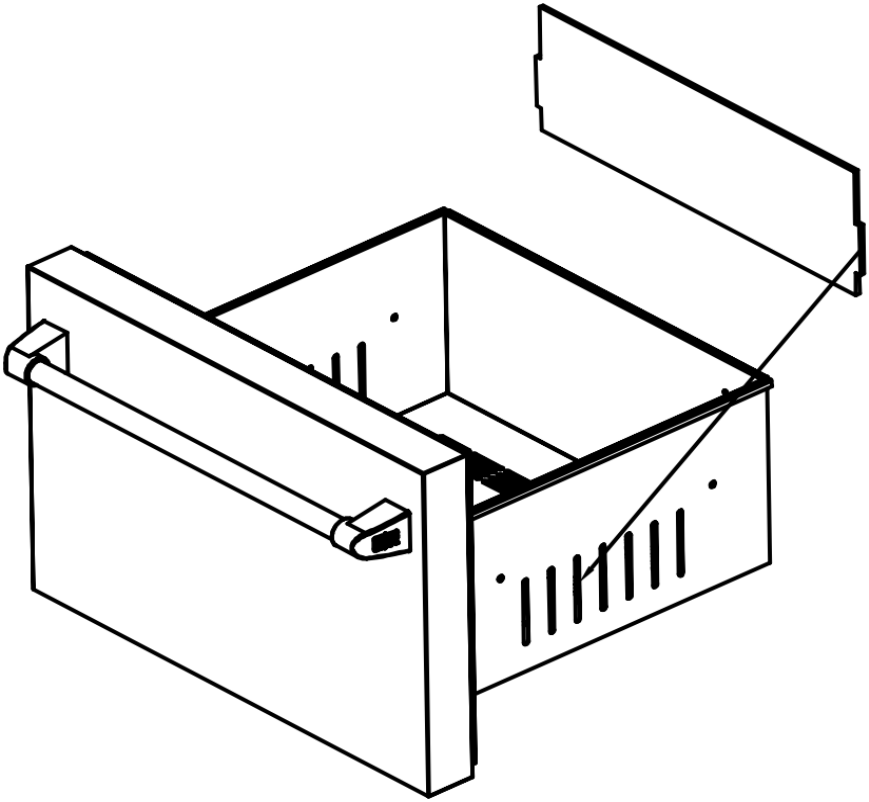

OPERATING YOUR APPLIANCE

It is recommended that you install the appliance in a place where the ambient temperature is between 50 F and 100.4°F (10°C- 38°C). If the ambient temperature is above or below recommended temperatures, the performance of the unit may be affected. For example, placing your unit in extremely cold or hot conditions may cause interior temperature s to fluctuate. The operating temperature range may not be reached.

CONTROL PANEL

The setting should be operate in the control panel.

（1）Functions of each keys in the control panel.

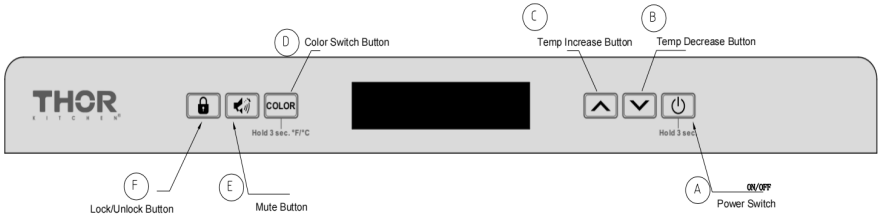

A. Power Switch:
Power On: After plugging in the power cord, press the power switch for 1 second to turn the appliance on.
Power Off: To turn off the appliance, press and hold the power switch for 3 seconds. The appliance will power off.

B. Temp Decrease Button: Used to lower (cool) the set temperature by 1°C or 1°F.
When the screen is flashing, press it once, the temperature setting is down by 1°C or 1°F, the lowest setting temperature is 1°C（34°F）.

C. Temp Increase Button: Used to raise (warm)the set temperature by 1°C or 1°F.
When the screen is flashing, press it once, the temperature setting is up by 1°C or 1°F, the highest setting temperature is 8°C(46°F) .

D. Color Switch Button:
1. Display Color Function: Press the button once to toggle the display color between white and blue.
2. Temperature Unit Display Function: To switch between Fahrenheit and Celsius temperature units, press and hold the button for 3 seconds.
3. Lights would on when the drawer has been opened.

E. Mute Button:
1. Mute Alarming Sound: Press the mute button once to silence the alarm.
2. Mute Pressing Sound: Press and hold the mute button for 3 seconds to mute the pressing sound.

F. Lock/Unlock Button:
1. Lock/Unlock: Press and hold the lock/unlock button for 3 seconds to lock or unlock the appliance. The display will indicate whether the appliance is locked or unlocked.
2. Automatic Lock: The appliance will automatically lock if there is no user interaction for 1 minute.

(2)Automatic Memory: The appliance has an automatic memory function. When power is restored after an outage, the appliance will retain the last set temperature, so you won't need to adjust it again.

(3)Defrosting
Automatic Defrost: The unit will automatically enter a defrosting cycle. During this time, the compressor will stop, and the fan will continue to run. The evaporator behind the rear wall will defrost, and condensate will flow through the drainage channel into the drip tray for evaporation.

Temperature During Defrost: The temperature will rise to approximately 41°F (5°C) during the defrost cycle. The temperature may take longer to reach this point if the set temperature is low (e.g., 34°F or 1°C) or if the cabinet is full of bottles. This is a normal process and does not indicate a malfunction.

CARE AND MAINTENANCE

ALARM AND ERROR CODES

1. Door Alarm Function: The internal fans will turn off once the door is opened..
Alarm Activation: The alarm will sound if the door remains open for more than 60 seconds.
Mute Option: If the alarm noise is disturbing, press Button E (the Mute Button) to silence it. However, the screen will continue to flash.
Compressor & Fans: If the door remains open for more than 60 seconds, both the compressor and internal fans will stop working. They will resume functioning once the door is closed.

Temperature Alarm Function: If there is an issue with the temperature, the alarm will sound, and the temperature display will flash.
Mute Option: You can mute the alarm by pressing the Mute Button, but the screen will continue to flash.

Types of Temperature Alarms:

A. Low Temperature Alert:
   The alarm will sound if the temperature inside the cabinet is 4°F (or 2°C) lower than the set temperature for over 60 minutes. The screen will display 'LL' and will keep flashing.
B. High Temperature Alert:
   The alarm will sound if the temperature inside the cabinet is 8°F (or 4°C) higher than the set temperature for over 24 hours. The screen will display 'HH' and will keep flashing.

ERROR CODES:

The appliance may display error codes to indicate specific issues. Below are the details:

CODES	Error
E1	The temperature sensor has a broken circuit.
E2	The temperature sensor has a short circuit.
E3	Defrosting sensor (evaporator) broken circuit The defrosting sensor inside the cabinet is broken.
E4	Defrosting sensor (evaporator) short circuit The defrosting sensor inside the cabinet has a short circuit.
Normal Flashing	Door open alarm-The door has been open for too long.
HH	High temperature alarm
LL	Low temperature alarm

Caution:

Compressor and Fan Shutdown:

If E1 or E2 appears, the compressor and fans will shut down immediately.

If E3 or E4 appears, the compressor and fans will stop for 5 minutes. After 5 minutes, the compressor and fans will resume normal operation.

CLEARING AND MAINTAINING YOUR APPLIANCE

Periodic cleaning and proper maintenance are essential for ensuring your appliance operates efficiently, performs at its best, and has a long service life. The recommended maintenance intervals are based on typical usage conditions. If you have pets, or other special circumstances, you may need to adjust these intervals accordingly.

Exterior Cleaning for Stainless Steel Models
To maintain the appearance and integrity of your stainless steel model, follow these guidelines:

- Avoid Damage from Harsh Substances: Exposure to chlorine gas, pool chemicals, saltwater, or bleach-based cleaners can cause discoloration or damage to your stainless steel.
- Routine Cleaning: Use a high-quality, all-in-one stainless steel cleaner and polish to clean the exterior once a month. Regular cleaning will help remove surface contaminants that could lead to rust. In some environments, weekly cleaning may be necessary.
- DO NOT USE STEEL WOOL PADS: These can scratch and damage the surface of the stainless steel.
- Use Appropriate Cleaners: Only use cleaners specifically designed for stainless steel. Avoid using glass, tile, or countertop cleaners, as they may cause damage.
- Dealing with Rust or Discoloration: If discoloration or rust appears, treat it promptly with Bon-Ami or Bar Keepers Friend Cleanser and a non-abrasive cloth. Always clean in the direction of the grain to preserve the finish.
- Finish with Polish: After removing rust or discoloration, apply a high-quality stainless steel cleaner and polish to prevent further damage.
- Avoid Abrasive Pads: Using abrasive pads, like Scotch-Brite, can blur the grain of the stainless steel and create lasting damage.

Note: Rust that is allowed to persist on the surface can penetrate into the steel, making it nearly impossible to remove. Regular maintenance is key to preventing this.

CARE AND MAINTENANCE

⚠ CAUTION ⚠

- Stainless steel models exposed to chlorine gas and moisture such as areas with spas or swimming pools, may have some discoloration of the stainless some discoloration of the stainless steel. Discoloration from chlorine gas is normal. Follow exterior cleaning instructions.
- NEVER USE CHLORIDE TO CLEAN STAINLESS STEEL.

POWER FAILURE

Most power failures are corrected within a few hours and should not affect the temperature of your appliance if you minimize the number of times the door is opened. If the power is going to be off for a longer period of time, you need to take the proper steps to protect the contents.

VACATION TIME

Short vacations: Leave the appliance operating during vacations of less than three weeks.
Long vacations: If the appliance will not be used for several months, remove all items and turn off the appliance. Clean and dry the interior thoroughly. To prevent odor and mold growth, leave the door open slightly, blocking it open if necessary.

MOVING YOUR APPLINCE

1. Remove all items.
2. Securely tape down all loose items (shelves) inside your appliance
3. Turn the adjustable legs up to the base to avoid damage.
4. Tape the door shut.
5. Be sure the appliance stays secure in the upright position during transportation. Also protect the outside of the appliance with a blanket or similar item.

ENERGY SAVING TIPS

The appliance should be located in the coolest area of the room or outdoor location, away from heat - producing appliances and out of direct sunlight.
Ensure that the unit is adequately ventilated. Never cover air vents.
Do not keep the door open any longer than necessary.
Let hot foods cool to room temperature before placing in the unit. Overloading the unit forces the compressor to run longer.
Be sure to wrap foods properly, and wipe containers dry before placing them in the unit. This cuts down on frost build up inside the unit.
Unit shelves and storage bins should not be lined with aluminum foil, wax paper or paper toweling. Liners interfere with cold air circulation, making the unit less efficient.
Organize and label stored items to reduce door openings and extended searches. Remove as many items as needed at one time, and close the door as soon as possible

TROUBLE SHOOTING

You can solve many common problems easily, saving you the cost of a possible service call. Try the suggestions below to see if you can solve the problem before calling the servicer.

Trouble shooting Guide

PROBLEM	POSSIBLE CAUSE	REMEDY
Appliance does not operate.	Appliance is not connected to a power supply.	Connect the appliance.
	The appliance is turned off.	Switch on the appliance
	Tripped circuit breaker or a blown fuse.	Switch on circuit breaker or replace fuse.
Appliance is not cold enough.	The temperature is not set correctly.	Check the set temperature
	The ambient temperature could require a lower temperature setting	Set a lower temperature
	The door was opened too often	Do not open the door more often than necessary.
	The door was not closed completely.	Close door properly
	Door is not hermetically sealed.	Check the door seal and clean or replace.
	The condenser is too dirty.	Clean the condenser when necessary.
	The ventilation opening is blocked or too dusty.	Clear the obstructions and clean the dust
Appliance turns itself on and off frequently.	The room temperature is higher than average	Put the appliance in a cooler place.
	A large amount of food has been added to the unit	Leave the appliance to work for a while until the set temperature has been reached.
	The door is open too often.	Do not open the door more often than necessary.
	The door is not closed completely.	Close door properly.
	The door gasket does not seal properly.	Check the door seal and clean or replace
Vibrations	The appliance is not properly leveled.	Level the appliance with the adjustable feet.
The appliance seems to make too much noise	The rattling noise may come from the flow of the refrigerant, which is normal. As each cycle ends, you may hear gurgling sounds caused by the flow of refrigerant in your appliance If temperature fluctuations occur, the contraction and expansion of the inner walls may cause popping and cracking noises.	
	The appliance is not properly level.	Level the appliance with the adjustable feet.
The door will not close properly.	The appliance is not properly level	Level the appliance with the adjustable feet.
	The door was reversed and not properly installed.	Check the door hinge and reassemble correctly.
	The gasket is dirty.	Clean the door gasket.
	The shelves are out of position.	Check the shelves and refit correctly.

Warranty And Service

Warranty and Service

This product has been manufactured by Thor International, 4651 E Airport Drive, California 91761. For Customer Service, please call (877) 288 - 8099

For the most up to date warranty and service policy, please refer to our website WWW.THORKITCHEN.COM/WARRANTY-REGISTRATION

For in-warranty service requests, please visit our website at WWW.THORKITCHEN.COM/SERVICE

Please Note: You must provide proof of purchase or installation date for any in-warranty service requests

We Stand Behind the Quality of Our Appliances.

Reliability and customer satisfaction are our top priorities. We offer a solid two-year warranty on both parts and labor. Enjoy professional-grade performance with the confidence that we've got you covered.

Warranty Registration Made Easy.

01 Scan the QR Code or visit thorkitchen.com/register-your-product.

02 Input your purchase and product information and select register.

03 That's it. You're all set. Enjoy!

Questions: service@thorinternational.com

WARRANTY

PARTS

THOR KITCHEN

ThorKitchen.com | #IgniteYourCulinaryCreativity