Installation/Owner's Manual

Installation and Appliance Setup

INSTALLER: Leave this manual with party responsible for use and operation.
OWNER: Retain this manual for future reference.

NOTICE: *SAVE THESE INSTRUCTIONS*

HEARTH & HOME technologies™

Models:
CK-30
ADP-CK30
The CK-30 Cabinet Kit must be used with the ADP-CK30 adapter kit, INFIT-30-BK front along with one of the following inserts:
EXCURSION-II
RUBY30IN
RUBY30IL
SUPREME-I30-IFT
SUPREME-I30-BIR
SUPRM-I30LP-IFT
▶ TRILLIANT30IN

GAS-FIRED C UL US LISTED

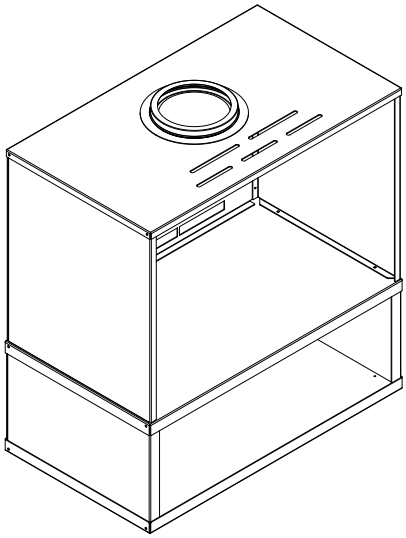

⚠ WARNING: If the information in these instructions is not followed exactly, a fire or explosion may result causing property damage, personal injury, or death.

- **DO NOT** store or use gasoline or other flammable vapors and liquids in the vicinity of this or any other appliance.
- **What to do if you smell gas**
  - **DO NOT** try to light any appliance.
  - **DO NOT** touch any electrical switch; do not use any phone in your building.
  - Immediately call your gas supplier from a neighbor's phone. Follow the gas supplier's instructions.
  - If you cannot reach your gas supplier, call the fire department.
- Installation and service must be performed by a qualified installer, service agency, or the gas supplier.

⚠ DANGER

HOT GLASS WILL CAUSE BURNS.

DO NOT TOUCH GLASS UNTIL COOLED.

NEVER ALLOW CHILDREN TO TOUCH GLASS.

A barrier designed to reduce the risk of burns from the hot viewing glass is provided with this appliance and shall be installed for the protection of children and other at-risk individuals.

This appliance may be installed as an OEM installation in manufactured home (USA only) or mobile home and must be installed in accordance with the manufacturer's instructions and the manufactured home construction and safety standard, *Title 24 CFR, Part 3280 or Standard for Instllation in Mobile Homes, CAN/CSA Z240MH, in Canada.*

This appliance is only for use with the type(s) of gas indicated on the rating plate.

⚠ WARNING

The surface of the appliance is hot when it is in use. Young children should be watched carefully when they are in the same room when the appliance is in use, and they should be taught to avoid the hot surface. Keep any objects that can burn well away from the appliance, and observe the recommended clearances that follow.

⚠ Safety Alert Key:

- ***DANGER!*** *Indicates a hazardous situation which, if not avoided will result in death or serious injury.*
- ***WARNING!*** *Indicates a hazardous situation which, if not avoided could result in death or serious injury.*
- ***CAUTION!*** *Indicates a hazardous situation which, if not avoided, could result in minor or moderate injury.*
- ***NOTICE:*** *Used to address practices not related to personal injury.*

Table of Contents

1 Product Specific and Important Safety Information

A. Kit Contents CK-30 . . . 3
B. Kit Contents ADP-CK30 . . . 4
C. Replacement Parts CK-30 and ADP-CK30 . . . 5

2 Getting Started

A. Design and Installation Considerations . . . 6
B. Tools and Supplies Needed . . . 6
C. Inspect Appliance and Components . . . 6

3 Framing and Clearances

A. Appliance Dimension Diagram . . . 7
B. Clearances to Combustibles . . . 8
C. Hearth Extension/Floor Protection . . . 8

4 Termination Location and Vent Information

A. Vent Termination and Minimum Clearances . . . 10
B. Approved Pipe . . . 11
C. Use of Elbows . . . 12
D. Measuring Standards . . . 12
E. Venting Guidelines for Horizontal Runs . . . 13
F. Vent Diagrams . . . 13

5 Vent Clearances and Framing

A. Pipe Clearances to Combustibles . . . 21
B. Wall Penetration Framing/Firestops . . . 21
C. Ceiling Firestop/Floor Penetration Framing . . . 22
D. Install Attic Insulation Shield . . . 22

6 Appliance Preparation

A. Assemble Cabinet . . . 23
B. Securing and Leveling Appliance . . . 27

7 Venting and Chimneys

A. Assemble Vent Sections . . . 28
B. Assemble Slip Sections . . . 29
C. Secure the Vent Sections . . . 30
D. Disassemble Vent Sections . . . 30
E. Vertical Termination Requirements . . . 32

8 Electrical Information

A. General Information . . . 34
B. Wiring Requirements . . . 34

9 Gas Information

A. Gas Information . . . 35

10 Reference Materials

▶ A. Vent Components Diagrams . . . 36
B. Vent Components List . . . 38
C. Contact Information . . . 40

➔ = Contains updated information.

B. Kit Contents CK-30

Item	DESCRIPTION	QTY
1	FASTENER PACK 37 (#8X1/2” SCREWS)	1
2	CASE BACK ASSEMBLY	1
3	CASE TOP	1
4	CASE RH SIDE	1
5	CASE LH SIDE	1
6	BASE TOP/BOTTOM	2
7	BASE BACK	1
8	BASE SIDE	2

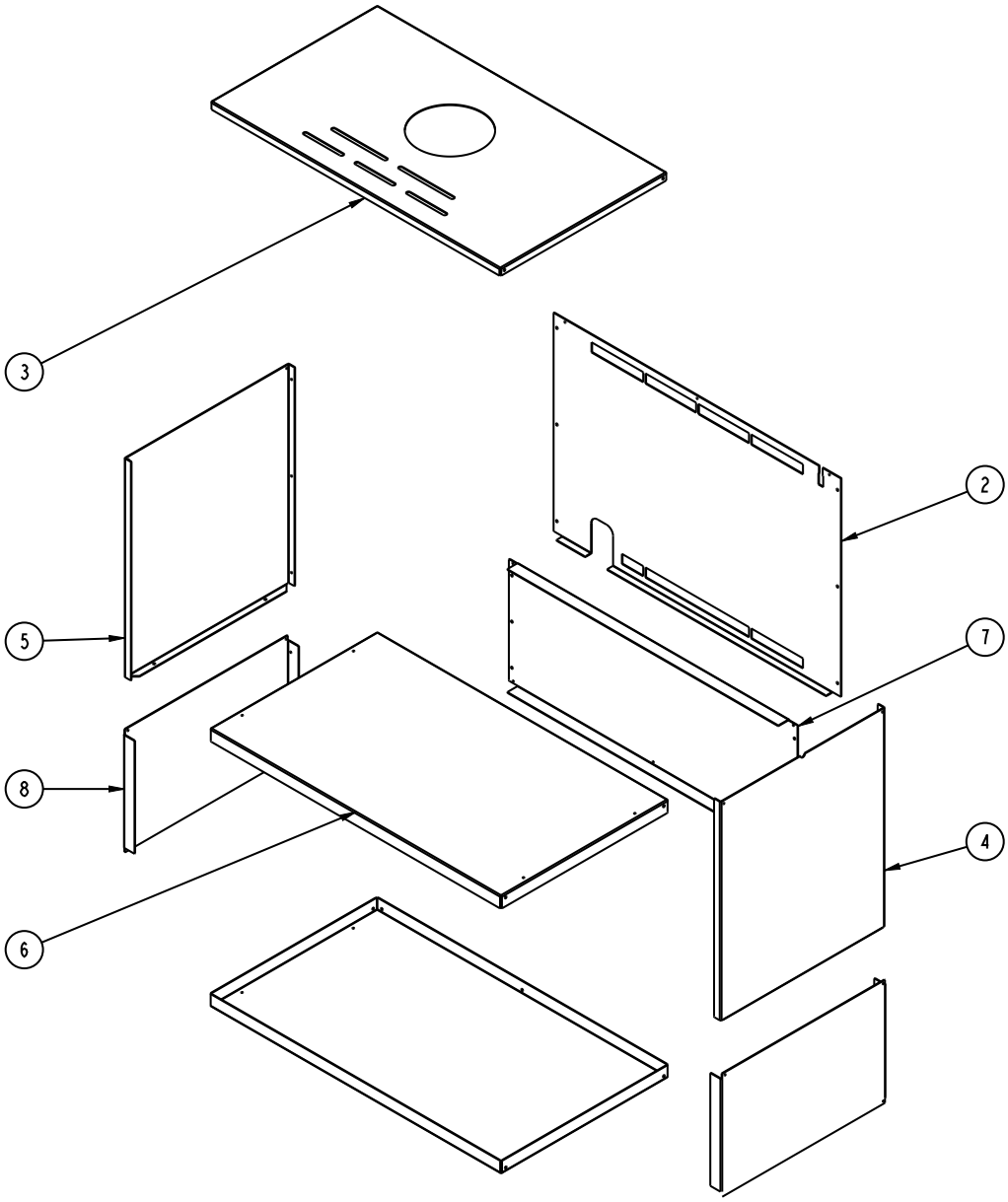

C. Kit Contents ADP-CK30

Item	DESCRIPTION	QTY
1	FASTENER PACK 7 (#8X3/4” SCREWS)	1
2	GASKET, ADAPTER	1
3	TRIM RING ASSEMBLY	1
4	ADAPTER SHIELD	1
5	2” JUMPER WIRE	1
6	JUMPER WIRE	1
7	ROCKER SWITCH	1
8	WIRE	1
9	ADAPTER ASSEMBLY	1
10	ADAPTER WELDMENT	1

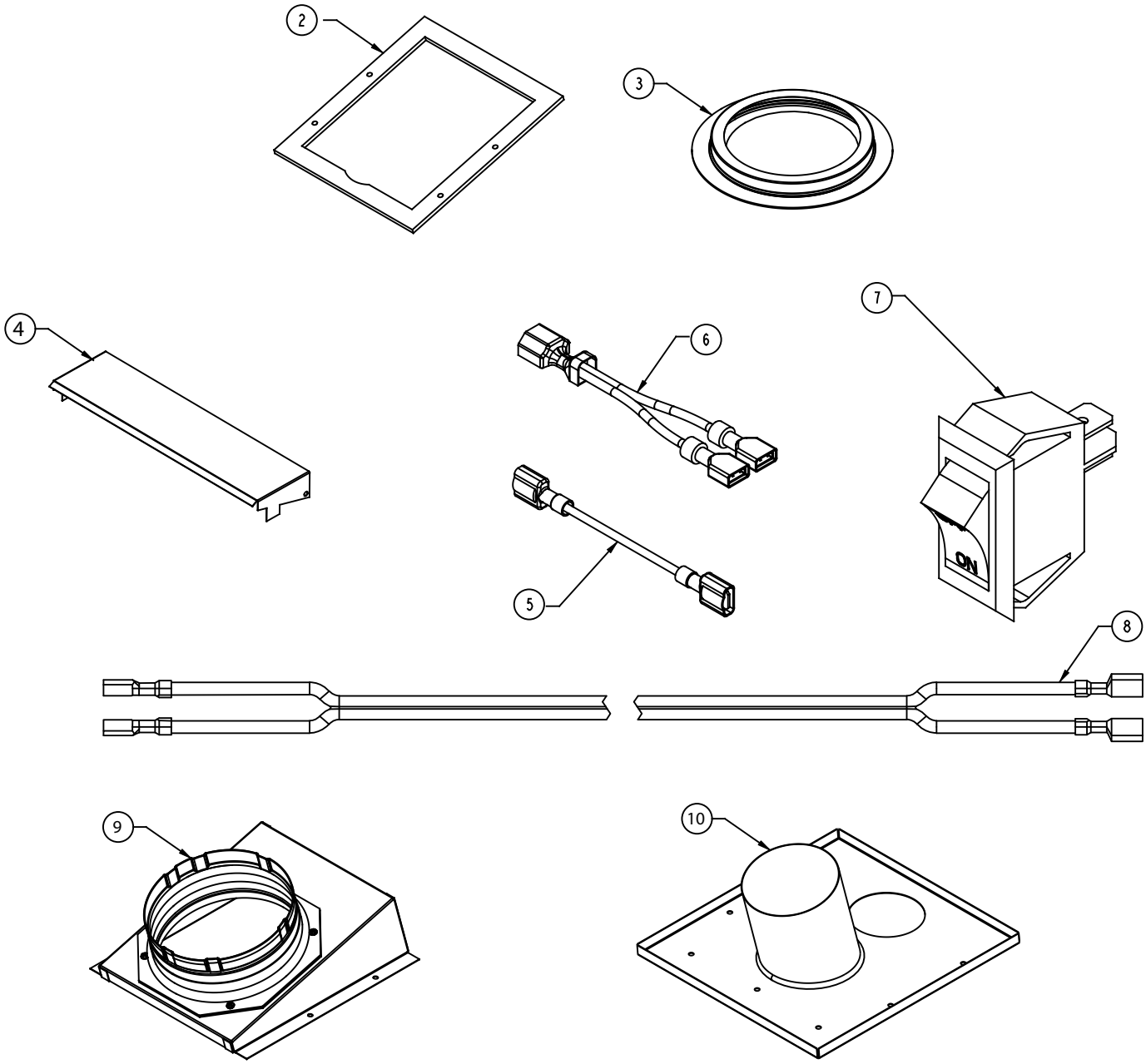

D. Replacement Parts CK-30 and ADP-CK30

ITEM	DESCRIPTION	COMMENTS	PART NUMBER
1	TOP CABINET ASSEMBLY		SRV4126-008
2	BOTTOM CABINET ASSEMBLY		SRV4126-009
3	GASKET, ADAPTER		SRV4126-120
4	TRIM RING ASSEMBLY		SRV4126-005
5	ADAPTER SHIELD		SRV4126-121
6	2” JUMPER WIRE		SRV2012-206
7	JUMPER WIRE		SRV2187-198
8	WIRE W/1/4 STR TERM M/F		SRV30007499
9	ROCKER SWITCH		SRV32D0232
10	ASSEMBLY, STARTING COLLAR		SRV2189-002
11	ADAPTER GASKET		460-0610
NS	POWDER COAT TOUCH UP PAINT		71479

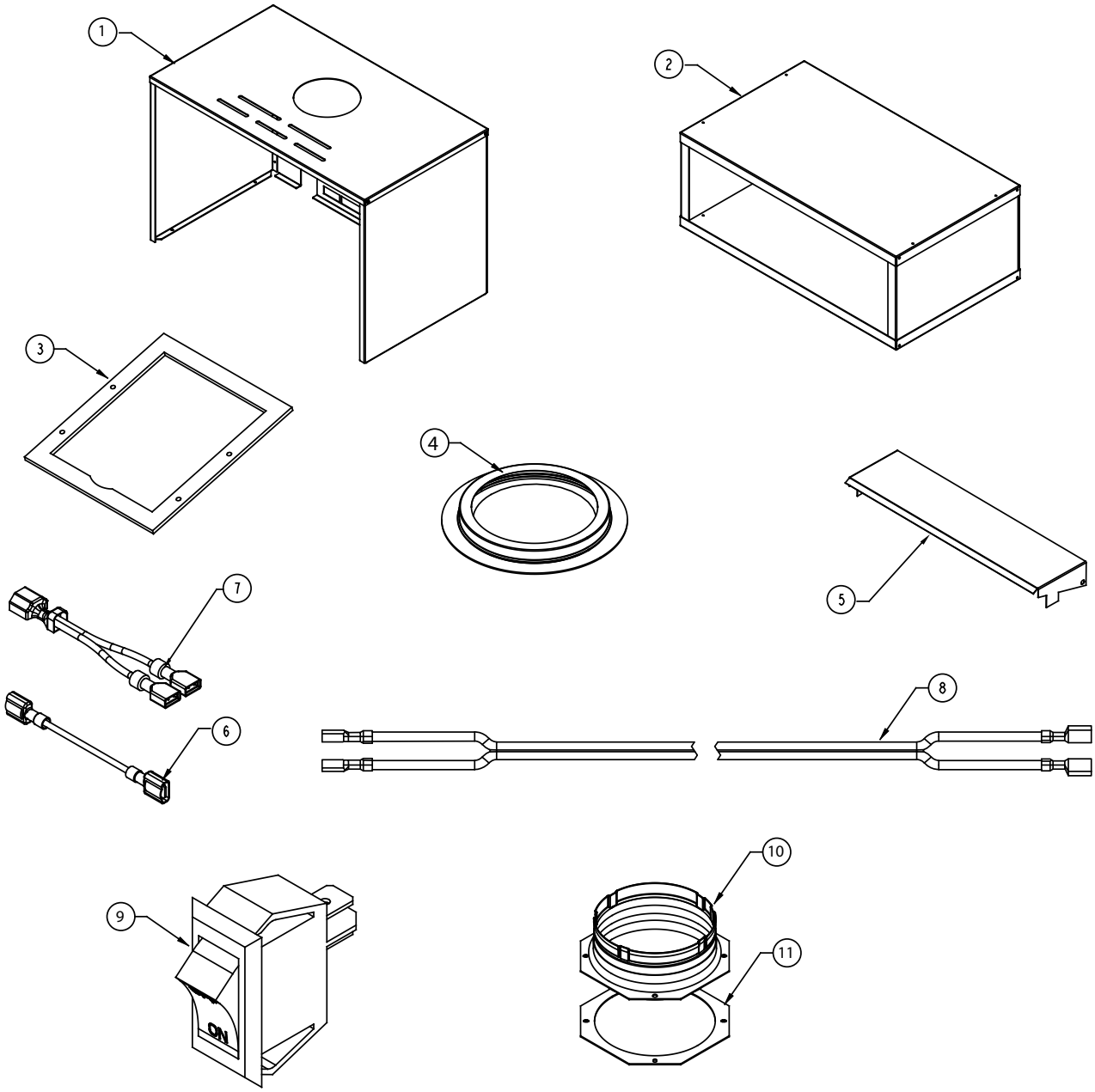

2 Getting Started

A. Design and Installation Considerations

This appliance may only terminate vertically, horizontal termination is not allowed. Hearth & Home Technologies direct vent gas appliances are designed to operate with all combustion air siphoned from outside of the building and all exhaust gases expelled to the outside. No additional outside air source is required.

Installation MUST comply with local, regional, state and national codes and regulations. Consult insurance carrier, local building inspector, fire officials or authorities having jurisdiction over restrictions, installation inspection and permits.

Before installing, determine the following:

- Where the appliance is to be installed.
- The vent system configuration to be used.
- Gas supply piping requirements.
- Electrical wiring requirements.
- Whether optional accessories—devices such as a fan or remote control—are desired.

Installation and service of this appliance should be performed by qualified personnel. Hearth & Home Technologies suggests NFI certified or factory trained professionals, or technicians supervised by an NFI certified professional (www.nficertified.org).

Improper installation, adjustment, alteration, service or maintenance can cause injury or property damage. For assistance or additional information, consult a qualified service technician, service agency or your dealer.

B. Tools and Supplies Needed

Before beginning the installation be sure that the following tools and building supplies are available.

Tape measure	Framing material
Pliers	Hammer
Phillips screwdriver	Manometer
Gloves	Framing square
Voltmeter	Electric drill and bits (1/4 in.)
Plumb line	Safety glasses
Level	Reciprocating saw

Flat blade screwdriver

Non-corrosive leak check solution

1/2 - 3/4 in. length, #6 or #8 Self-drilling screws

Caulking material (300ºF minimum continuous exposure rating)

One 1/4 in. female connection (for optional fan).

C. Inspect Appliance and Components

- Carefully remove the appliance and components from the packaging.
- The vent system components and optional accessories may be shipped in separate packages.
- If packaged separately, the log set must be installed.
- Report to your dealer any parts damaged in shipment, particularly the condition of the glass.
- **Read all of the instructions before starting the installation. Follow these instructions carefully during the installation to ensure maximum safety and benefit.**

WARNING! Risk of Fire or Explosion! *Damaged parts could impair safe operation.* ***DO NOT*** *install damaged, incomplete or substitute components. Keep appliance dry.*

Hearth & Home Technologies disclaims any responsibility for, and the warranty will be voided by, the following actions:

- Installation and use of any damaged appliance or vent system component.
- Modification of the appliance or vent system.
- Installation other than as instructed by Hearth & Home Technologies.
- Improper positioning of the gas logs or the glass door.
- Installation and/or use of any component part not approved by Hearth & Home Technologies.

Any such action may cause a fire hazard.

WARNING! Risk of Fire, Explosion or Electric Shock! DO NOT *use this appliance if any part has been under water. Call a qualified service technician to inspect the appliance and to replace any part of the control system and/or gas control which has been under water.*

Installation and service of this appliance should be performed by qualified personnel. Hearth & Home Technologies recommends HHT Factory Trained or NFI certified professionals.

3 Framing and Clearances

A. Appliance Dimension Diagram

Dimensions are actual appliance dimensions. Use for reference only.

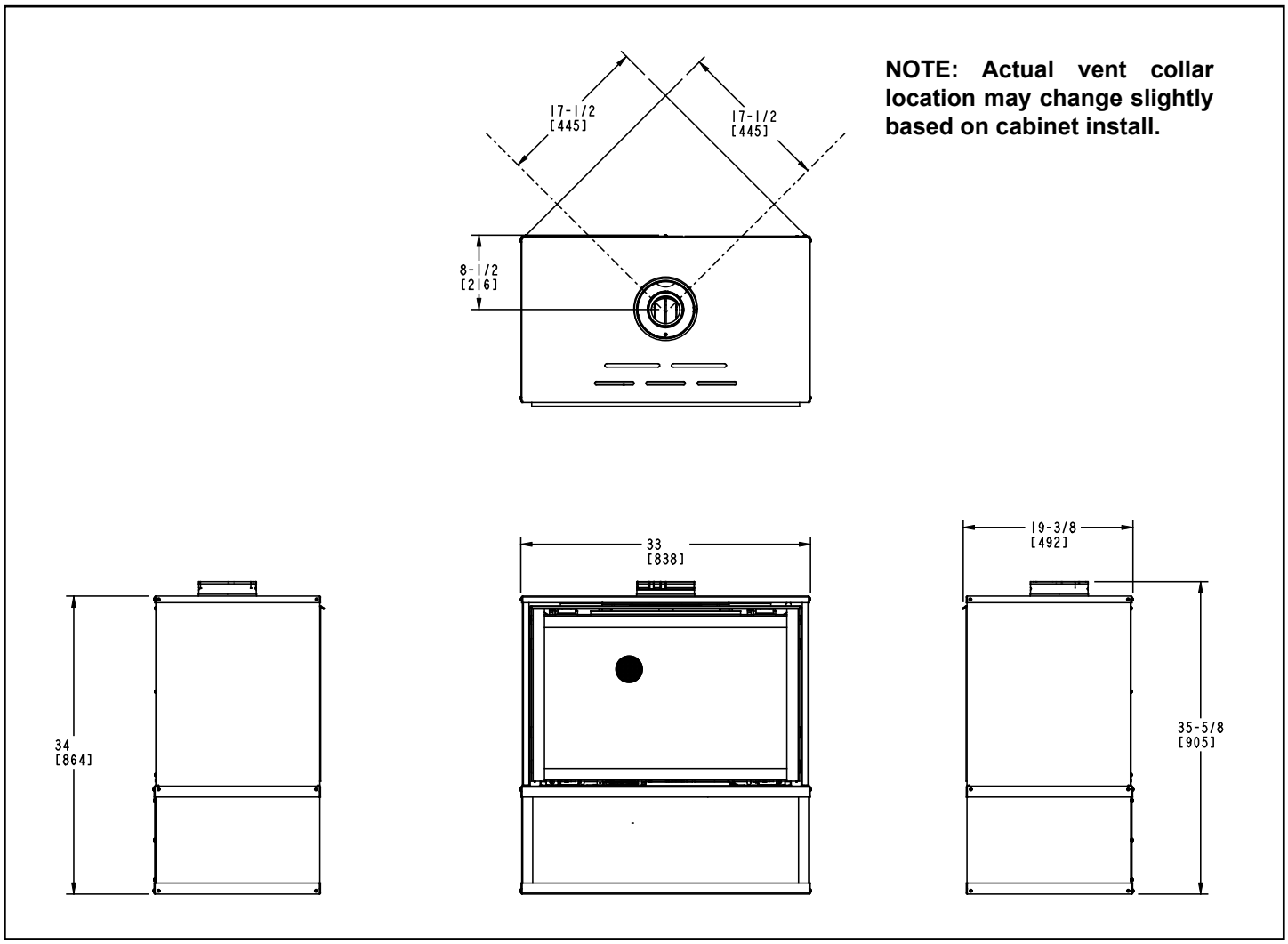

Figure 3.1 - Appliance Dimensions

B. Clearances to Combustibles

When selecting a location for the appliance it is important to consider the required clearances to walls (see Figure 3.2).

WARNING! Risk of Fire or Burns! *Provide adequate clearance around air openings and for service access. Due to high temperatures, the appliance should be located out of traffic and away from furniture and draperies.*

NOTICE: *Illustrations reflect typical installations and are FOR DESIGN PURPOSES ONLY. Illustrations/diagrams are not drawn to scale. Actual installation may vary due to individual design preference.*

NOTICE: *Some carpet materials may be sensitive to radiant heat from the appliance causing discoloration or odor.*

C. Hearth Extension/Floor Protection

CAUTION! Risk of Fire or Injury! *Install appliance on a stable, level, platform or floor strong enough to support appliance without tipping.*

A non-combustible hearth pad is not required. However, the floor beneath the appliance must be stable, level, and strong enough to support the appliance without a tipping hazard. It is permissible to place the appliance on carpet.

Combustible flooring may be located in front of the appliance. See Figure 3.4 for vinyl flooring recommendations.

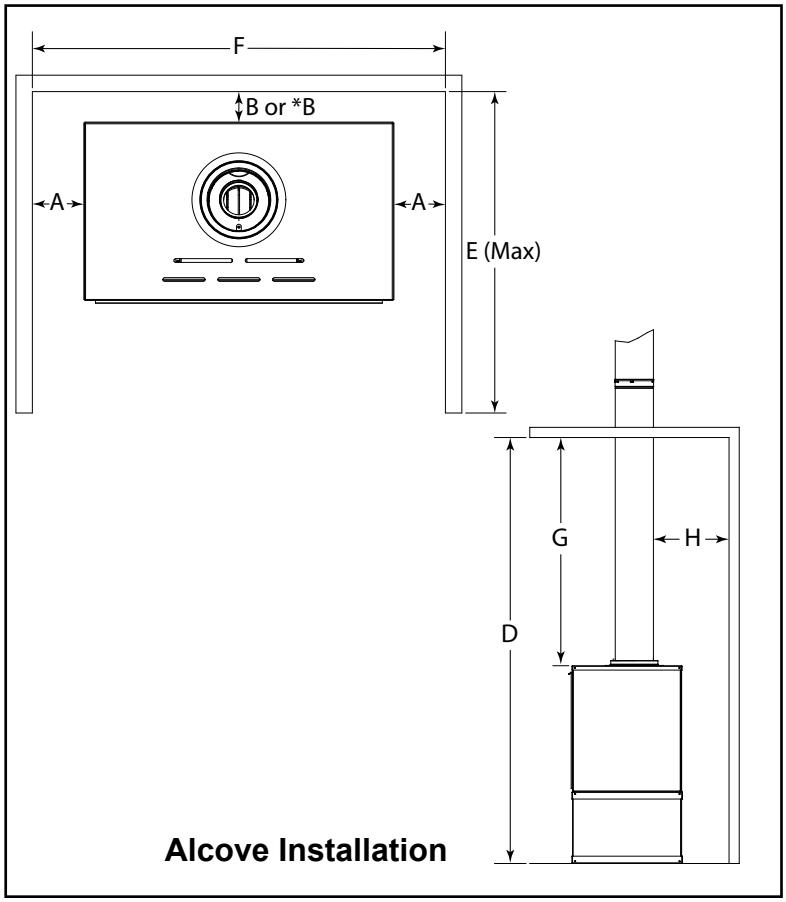

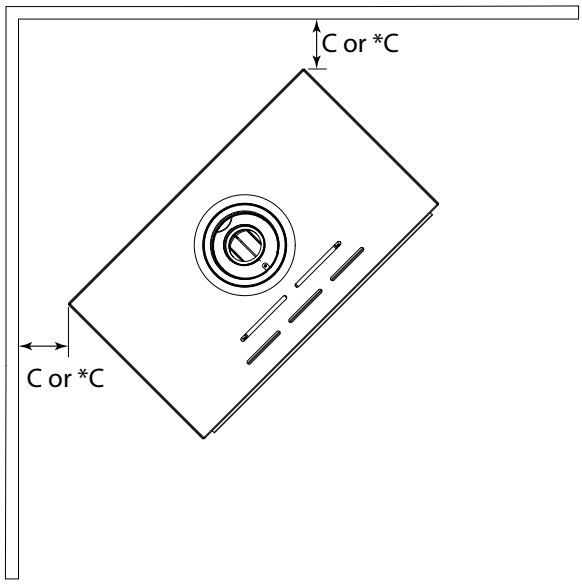

Note: Dimensions are minimums as shown and may not be typical for all applications. An alcove installation is shown above on left.

*To remove the fan from the back of the appliance clearance to the wall should be increased to *B and *C to allow back panel of the cabinet to be removed. The fan may be removed from front of appliance. See Insert Installation Manual.

Model		A	B	*B	C	*C	D	E (MAX.)	F	G	H	
											Top of pipe	Side of pipe
CK-30	Inches	5-1/2	5	8	3	5	75	36	44	40	3	1
	Millimeters	140	127	203	76	127	1905	914	1118	1016	76	25

Figure 3.2 - Appliance Locations

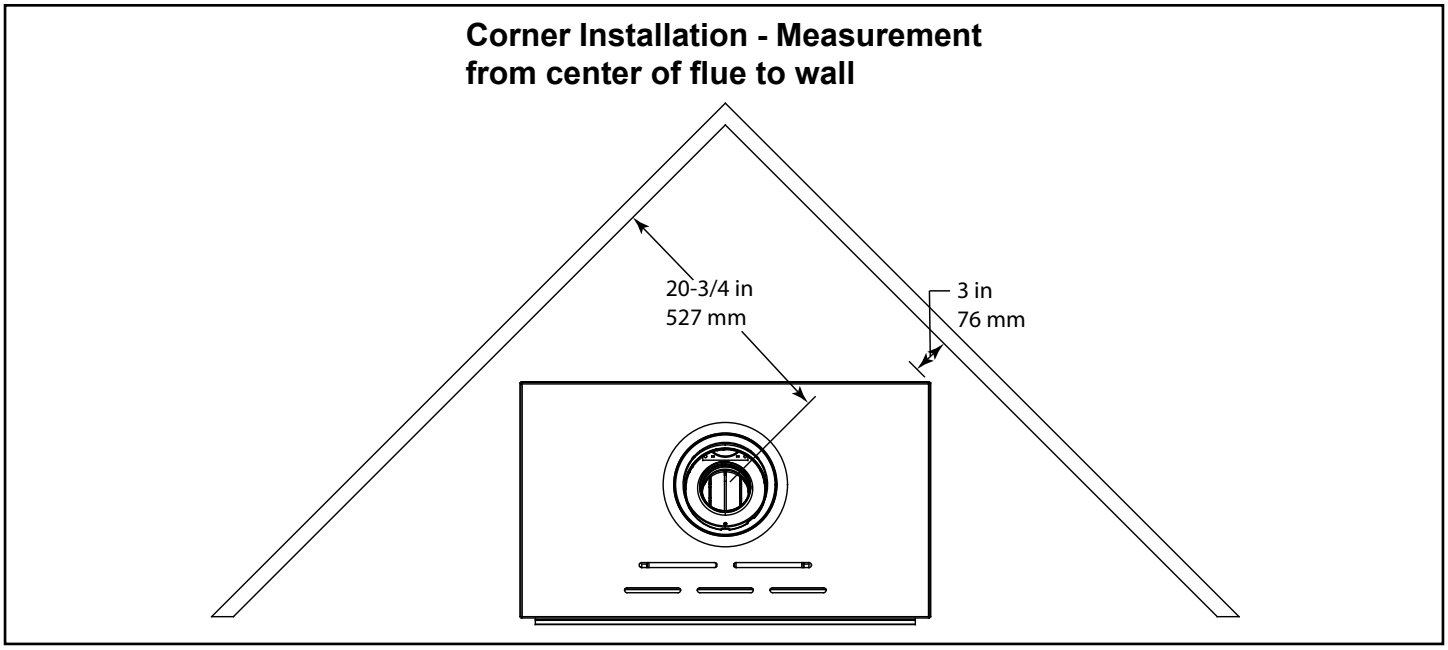

Figure 3.3

Vinyl Flooring

Vinyl Flooring is sensitive to heat. A 12 inch minimum depth hearth extension is recommended when using vinyl flooring up to the applicance. See Figure 3.4.

NOTICE: Clearances that do not meet the minimum guidelines could result in damage or buckling to the vinyl flooring and is done at the installer's risk.

Hearth and Home Technologies does not recommend adhesive based vinyl flooring due to thermal expansion. Floating-style flooring can be used, but will reach temperatures up to 110°F in a room with ambient temperature of 70°F. Consult flooring specifications to ensure compatibility.

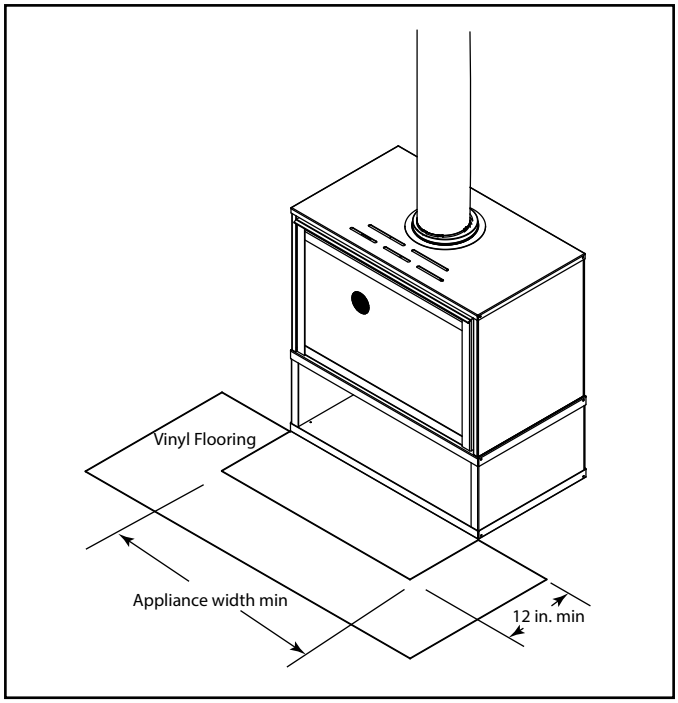

Figure 3.4 - Vinyl Flooring Requirements

4 Termination Location and Vent Information

A. Vent Termination Minimum Clearances

WARNING

Fire Risk.

Maintain vent clearance to combustibles as specified.

- **DO NOT** pack air space with insulation or other materials.

Failure to keep insulation or other materials away from vent pipe may cause overheating and fire.

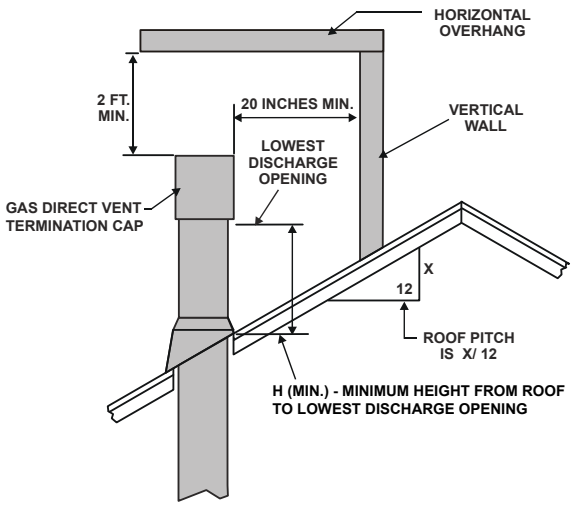

Roof Pitch	H (Min.) Ft.
Flat to 6/12	1.0*
Over 6/12 to 7/12	1.25*
Over 7/12 to 8/12	1.5*
Over 8/12 to 9/12	2.0*
Over 9/12 to 10/12	2.5*
Over 10/12 to 11/12	3.25
Over 11/12 to 12/12	4.0
Over 12/12 to 14/12	5.0
Over 14/12 to 16/12	6.0
Over 16/12 to 18/12	7.0
Over 18/12 to 20/12	7.5
Over 20/12 to 21/12	8.0

Figure 4.1- Minimum Height From Roof To Lowest Discharge Opening

A	B
6 in. (minimum) up to 20 in. *152 mm/508 mm*	18 in. minimum *457 mm*
20 in. and over	0 in. minimum

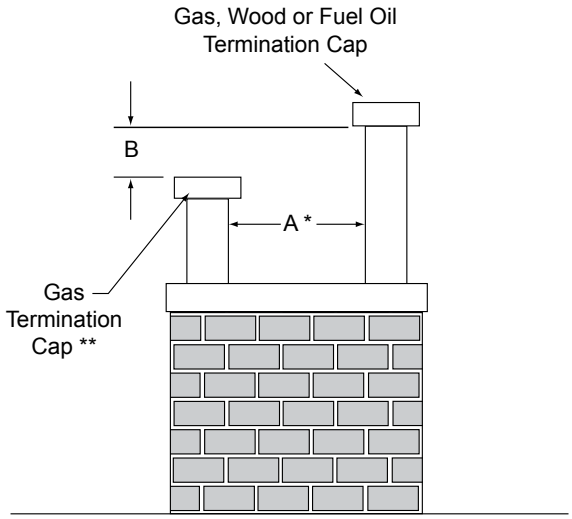

* If using decorative cap cover(s), this distance may need to be increased. Refer to the installation instructions supplied with the decorative cap cover.

** In a staggered installation with both gas and wood or fuel oil terminations, the wood or fuel oil termination cap must be higher than the gas termination cap.

Figure 4.2 - Staggered Termination Caps

B. Approved Pipe

This appliance is approved for use with Hearth & Home Technologies SLP, Simpson Duravent and ICC venting systems. Refer to Section 11.A for vent component information and dimensions.

DO NOT mix pipe, fittings or joining methods from different manufacturers.

The pipe is tested to be run inside an enclosed wall. There is no requirement for inspection openings at each joint within the wall.

WARNING! Risk of Fire or Asphyxiation. *This appliance requires a separate vent.* ***DO NOT*** *vent to a pipe serving a separate solid fuel burning appliance.*

DO NOT USE FIELD-FABRICATED VENTING COMPONENTS.

This product is approved to be vented vertically through the roof. You may vent through a Class A or masonry chimney if an approved adapter is used. This product is not approved for use with a horizontal termination.

This appliance is a direct vent heater. All combustion air must come directly from the outside of the building. The vent pipe for this unit consists of an inner and an outer pipe. The inner pipe carries the appliance exhaust out of the system, and the outer pipe brings fresh combustion air into the appliance.

- A round support box/wall thimble or heat shield is required when the venting passes through a combustible wall.
- A support box or ceiling firestop is required when the venting passes through a ceiling.
- Roof flashing and a storm collar are required when venting passes through the roof.
- Follow instructions provided with the venting for installation of these items.

C. Use of Elbows

Diagonal runs have both vertical and horizontal vent aspects when calculating the effects. Use the rise for the vertical aspect and the run for the horizontal aspect. See Figure 4.4.

Two 45º elbows may be used in place of one 90º elbow. On 45º runs, one foot of diagonal is equal to 8-1/2 in. (216 mm) horizontal run and 8-1/2 in. (216 mm) vertical run. A length of straight pipe is allowed between two 45º elbows. See Figure 4.4.

Figure 4.5 shows the vertical and horizontal offsets for SLP elbows.

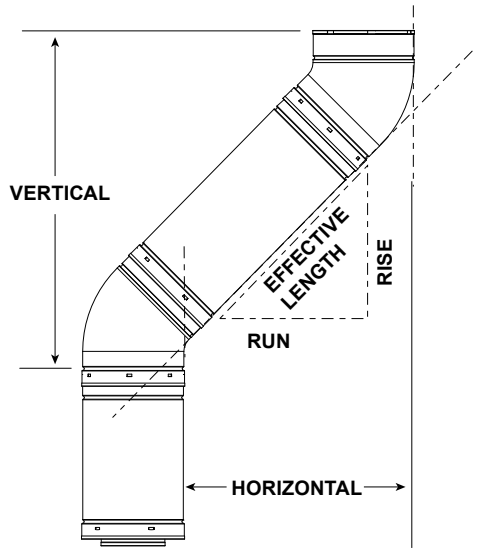

SLP Pipe	Effective Length		Rise/Run	
	Inches	Millimeters	Inches	Millimeters
SLP4	4	102	2-3/4	70
SLP6	6	152	4-1/4	108
SLP12	12	305	8-1/2	216
SLP24	24	610	17	432
SLP36	36	914	25-1/2	648
SLP48	48	1219	34	864
SLP6A	3 to 6	76 to 152	2-1/8-4-1/4	54-108
SLP12A	3 to 12	76 to 305	2-1/8-8-1/2	54-216

Figure 4.4

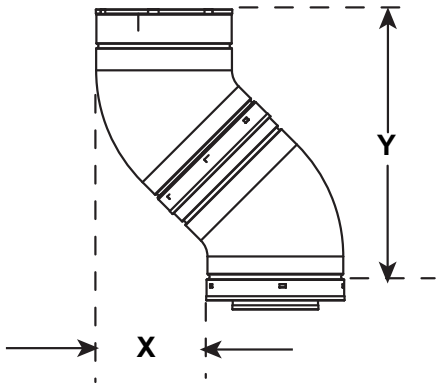

Vent Type	X		Y	
	Inches	Millimeters	Inches	Millimeters
SLP	5	127	11-3/4	298

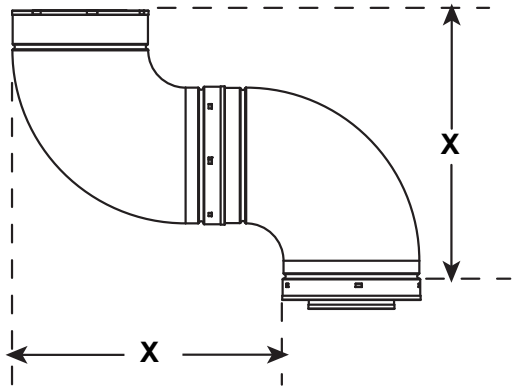

Vent Type	X	
	Inches	Millimeters
SLP	11-1/4	286

Figure 4.5 - Vertical and Horizontal Offset for SLP Elbows

D. Measuring Standards

Vertical and horizontal measurements listed in the vent diagrams were made using the following standards:

- Pipe measurements are shown using the effective length of pipe. See Figure 11.1 for SLP for information on effective length of pipe components.
- Vertical terminations are measured to bottom of termination cap.
- Horizontal pipe installed level with 1/4 inch rise per foot.

E. Venting Guidelines for Horizontal Runs

Max Horizontal Run	2 ft. (50 mm) when vertical rise is 10 ft (3m)
Min Vertical Before Elbow	Min of 4 ft vertical (102 mm) must be used prior to any horizontal run.
Horizontal Run requires a non-combustible support every 5 ft (1.5 m), i.e., plumbing tape	
A vent run off the top of the appliance must have a minimum vertical of 4 feet.	

F. Vent Diagrams

General Rules:

- SUBTRACT 3 ft. from the total H measurement for each 90º elbow installed horizontally.
- SUBTRACT 1 ft. from the total H measurement for each 45º elbow installed horizontally.
- A maximum of three 90º elbows (or six 45º elbows) may be used in any vent configuration. Some elbows may be installed horizontally. See specific vent diagrams.
- When penetrating a combustible wall, a wall shield firestop must be installed.
- When penetrating a combustible ceiling, a ceiling firestop must be installed.

Top Vent - Vertical Termination - (continued)

No Elbow

Note: As vertical pipe increases, vertical restrictors will need to be adjusted. See Insert installation manual for adjustment instructions.

V_1 = 40 ft. Max. (12.2 m)
V_1 = 10 ft. Min. (3.0 m)

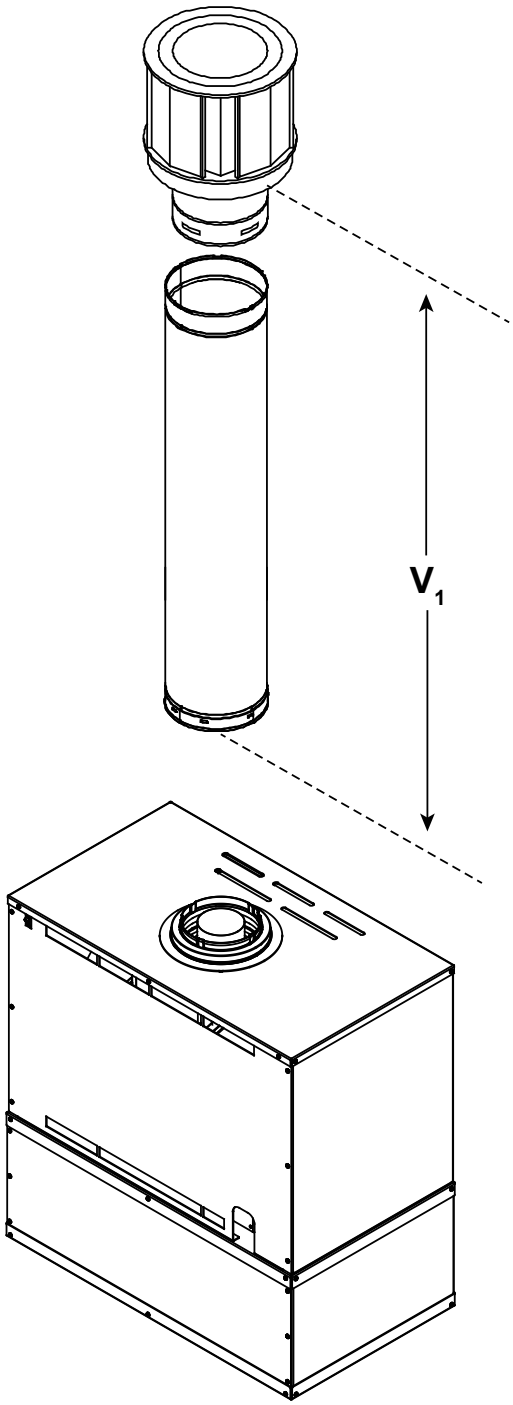

Figure 4.6

Top Vent - Vertical Termination - (continued)

Two Elbows

Note: As vertical pipe increases, vertical restrictors will need to be adjusted. See Insert installation manual for adjustment instructions.

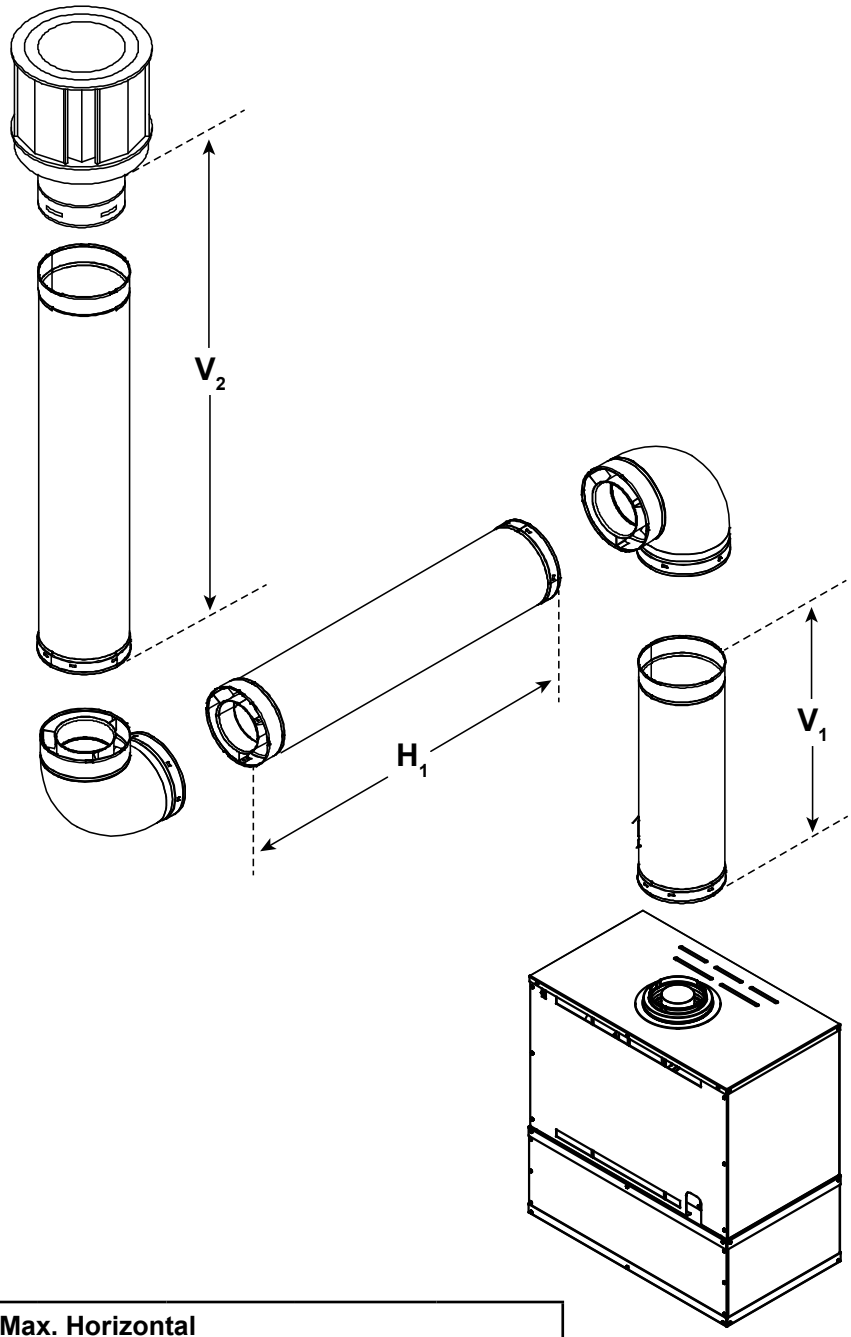

2 Elbows to Max. Horizontal							
V_1 Minimum		$V_1 + V_2$ Maximum		$V_1 + V_2$ Minimum		H_1 Maximum	
4 ft.	1.2 m	24 ft.	7.3 m	10 ft.	3.1 m	2 ft.	610 mm
10 ft.	3.1 m	15 ft.	4.6 m	10 ft.	3.1 m	2 ft.	610 mm
20 ft.	6.1 m	24 ft.	7.5 m	20 ft.	6.1 m	2 ft.	610 mm
28 ft.	8.5 m	34 ft.	9.1 m	28 ft.	8.5 m	3 ft.	914 mm

Figure 4.7

Top Vent - Vertical Termination - (continued)

Three Elbows

Note: As vertical pipe increases, vertical restrictors will need to be adjusted. See Insert installation manual for adjustment instructions.

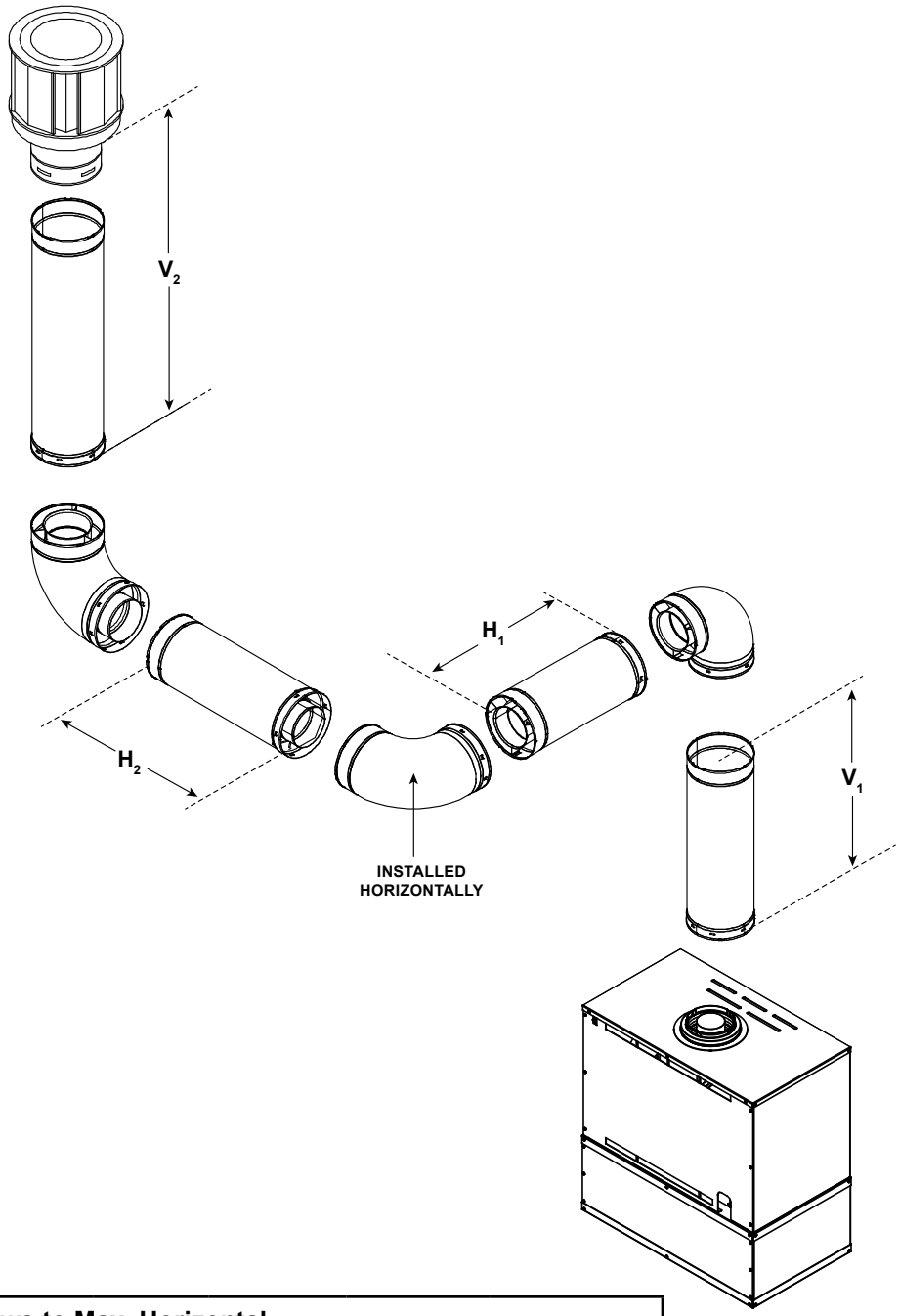

3 Elbows to Max. Horizontal							
V_1 Minimum		$V_1 + V_2$ Maximum		$V_1 + V_2$ Minimum		$H_1 + H_2$ Maximum	
8 ft.	2.4 m	34 ft.	9.1 m	28 ft.	8.5 m	1 ft.	310 mm

Figure 4.8

Class A Metal Chimney

Prior to installing the gas stove, ensure that the existing chimney is functionally sound and clean.

- Have the chimney and adjacent structure inspected and cleaned by qualified professionals. Hearth & Home Technologies recommends that NFI or CSIA certified professionals, or technicians under the direction of certified professionals, conduct a minimum of a NFPA 211 Level 2 inspection of the chimney.
- Replace component parts of the chimney and fireplace as specified by the professionals.
- See Section 11 for venting components.

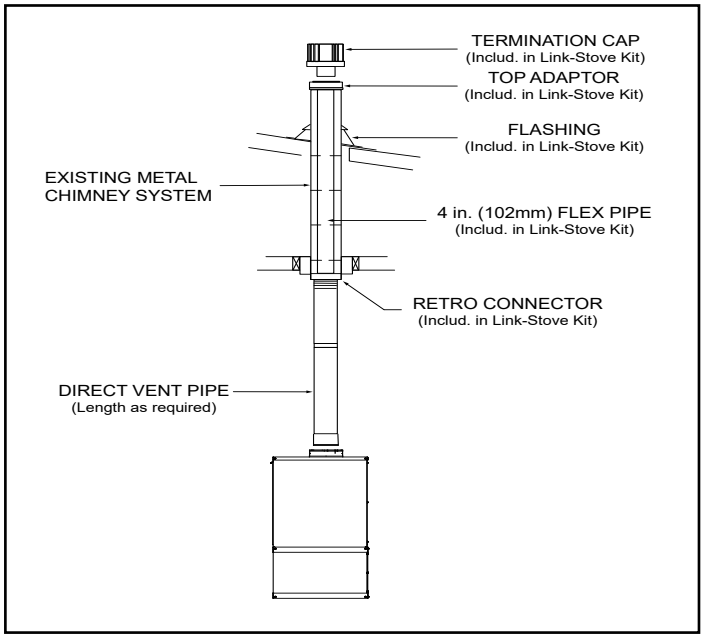

Figure 4.9

1. Remove existing chimney cap.

2. Measure the distance from the top of the chimney to the bottom of the ceiling support box, add 3 in. (76mm) to this measurement, and cut a section of 4 in. (101mm) flex pipe to that length (the flex should be fully extended).

3. Connect the end of the flex pipe section to the underside of the top adapter, using four sheet metal screws. See Figure 4.10.

4. Pass the flex pipe down through the center of the chimney system, and center the top adapter on the top of the chimney pipe. Drill four 1/8 in. (3mm) diameter holes through the top adapter, and into the chimney top. Ensure that you are drilling into the metal on the chimney. Twist lock the high wind termination cap onto the top adapter. See Figure 4.11 and Figure 4.12.

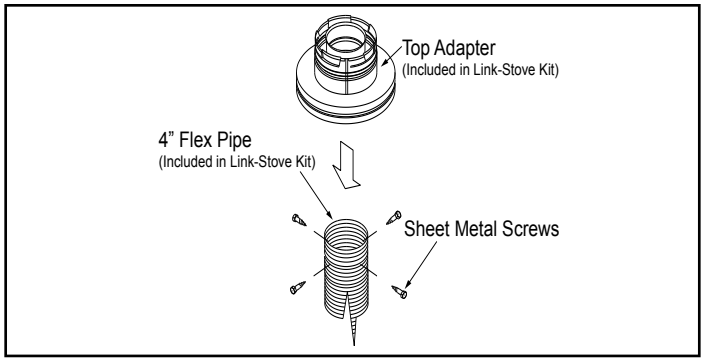

Figure 4.10

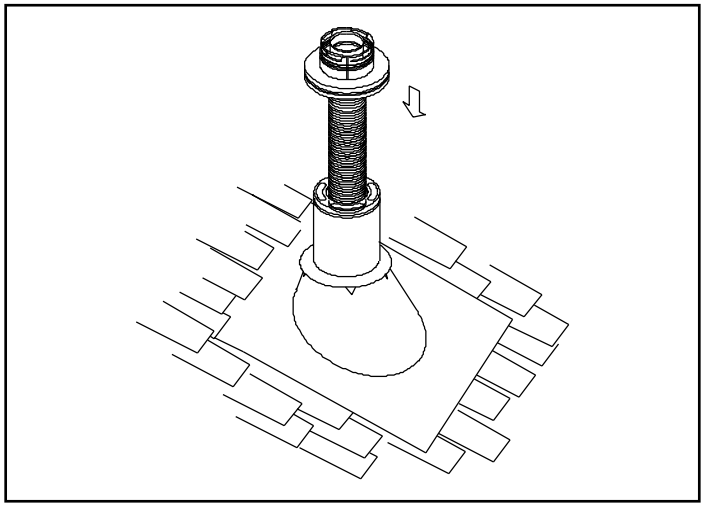

Figure 4.11

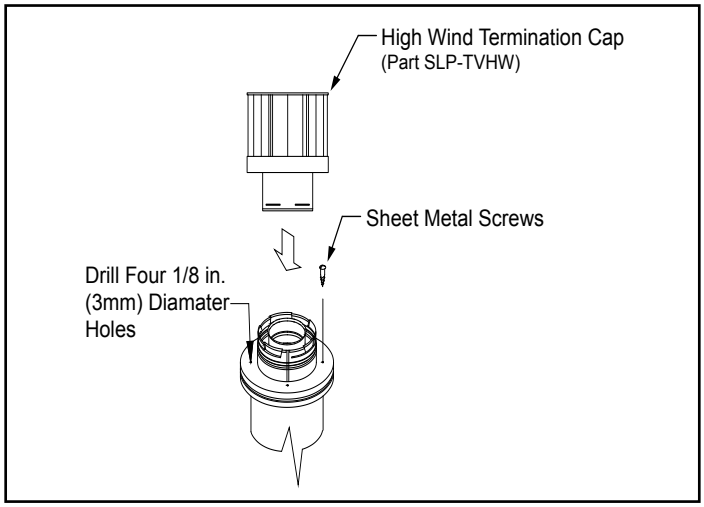

Figure 4.12

5. Pull the flex pipe down through the ceiling support box, until it protrudes approximately 3 in. (76mm). Connect the flex pipe to the retro connector, and attach with sheet metal screws.

6. Push the flex pipe back up into the ceiling support box, center the retro connector, and attach it to the support box with sheet metal screws.

7. The connection between the appliance and the retro connector may be completed with sections of direct vent pipe.

Existing Masonry Chimney

Prior to installing the gas stove, ensure that the existing chimney is functionally sound and clean.

- Have the chimney and adjacent structure inspected and cleaned by qualified professionals. Hearth & Home Technologies recommends that NFI or CSIA certified professionals, or technicians under the direction of certified professionals, conduct a minimum of a NFPA 211 Level 2 inspection of the chimney.
- Replace component parts of the chimney and fireplace as specified by the professionals.
- See Section 10 for venting components.

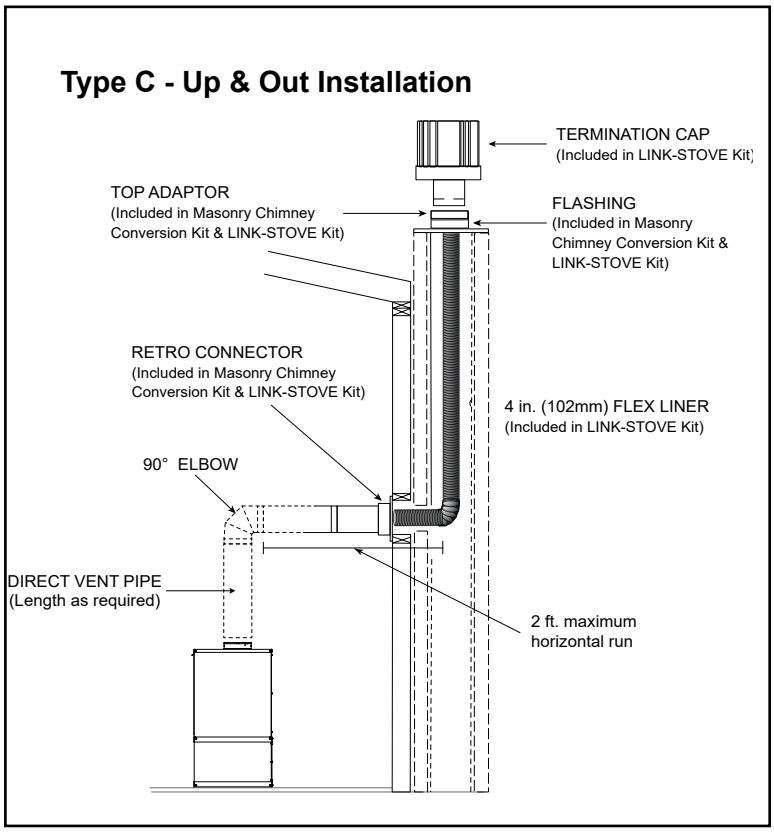

Figure 4.13

1. Before cutting any holes, assemble the desired sections of direct vent pipe to determine the center of the masonry penetration.
2. Once the center point of the penetration has been determined, cut a 6 in. (152mm) diameter hole in the masonry. If the hole is too large, the retro connector might not mount properly; if the hole is too small, the appliance might starve for intake air. If there is a frame wall in front of the masonry wall, cut and frame a 10 in. (254mm) square opening in the wall (centered around the 6 in. (152mm) masonry opening). If there is sheet rock only (no studs) in front of the masonry the 10 in. (254mm) opening is still needed, but does not need to be framed. If the hole is framed a wall thimble is required. This allows the retro connector to mount directly on the masonry and provide the correct clearances to combustibles. See Figure 4.14.

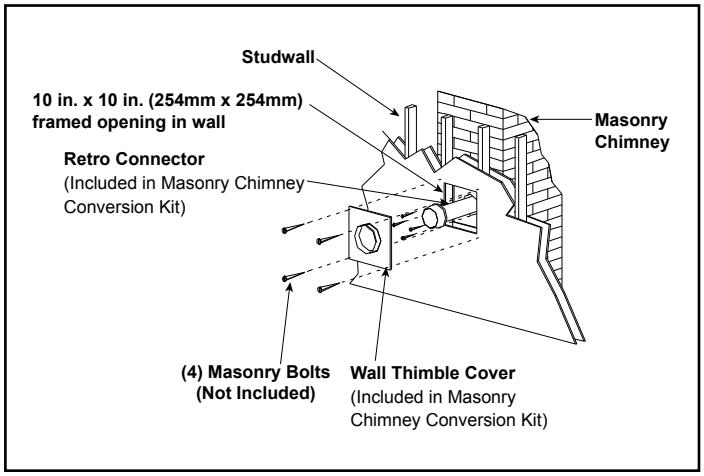

Figure 4.14

3. Secure the flashing to the top of the masonry chimney using a bead of non-hardening sealant-adhesive. If the flashing is larger than the top of the chimney, cut and fold flashing as needed to fit chimney. See Figure 4.15.

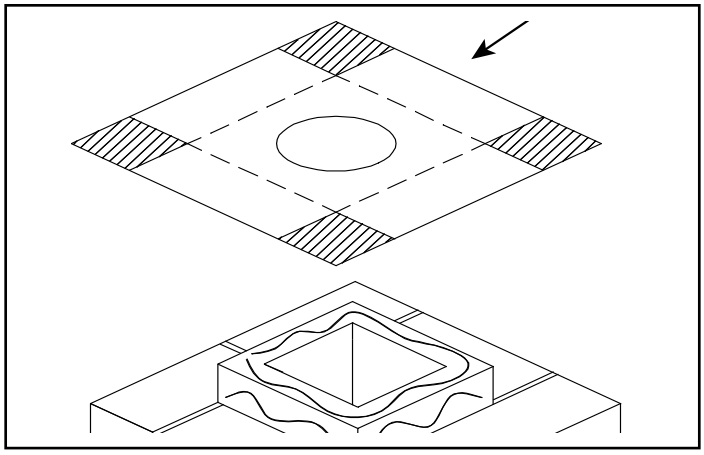

Figure 4.15

4. To determine the length of flex needed, measure from 3 in. (76mm) above the top of the flashing down to the level of the opening. Add the distance from the center of the chimney out through the wall. Cut a piece of 4 in. (102mm) flex to this length (extended to its nominal length). Be sure to leave 2-3 in. (51-76mm) of flex above the existing chimney to allow for connection to the termination kit.
5. Connect the flex liner to the top adapter using three sheet metal screws. See Figure 4.10.
6. Feed the flex liner through the flashing into the chimney. Carefully feed the flex liner down the chimney to the bottom and out the opening in the masonry wall, forming an angle to line up the flex liner with the vent opening on the appliance.

WARNING! Risk of Fire, Explosion or Asphyxiation! *Improper support may allow vent to sag and separate. Use vent run supports and connect vent sections per installation instructions.* ***DO NOT*** *allow vent to sag below connection point to appliance.*

7. If additional lengths of flex liner are needed to span the chimney height, use a flex coupler to connect the pieces of flex liner together. Connect the flex to the coupler by using four sheet metal screws for each side. See Figure 4.16.

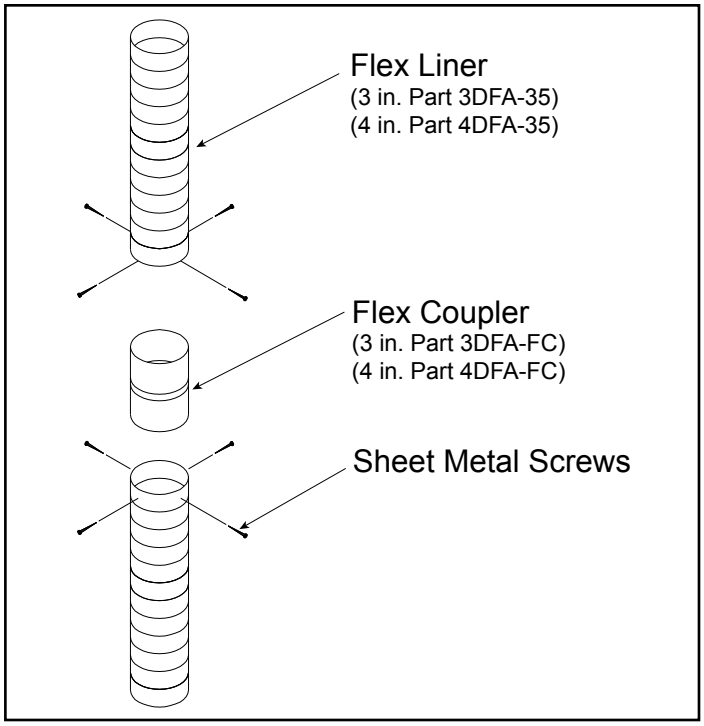

Figure 4.16

8. Secure the top adapter to the flashing. Use three sheet metal screws through the side of the top adapter into the flange on the flashing See Figure 4.17. Twist lock the high wind termination cap on to the top adapter.

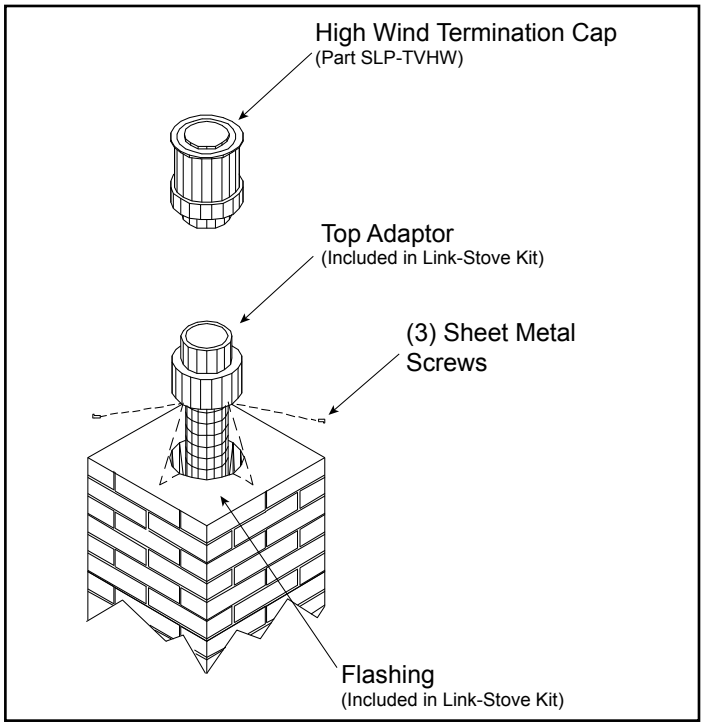

Figure 4.17

9. Attach the flex to the retro connector. Use three sheet metal screws to attach the flex liner to the connector. Mount the retro connector to the masonry wall using masonry bolts. See Figure 4.18. Redrill larger holes on connector as needed. Be careful to ensure that the connector is centered in the opening and the mounting holes line up with the masonry wall.

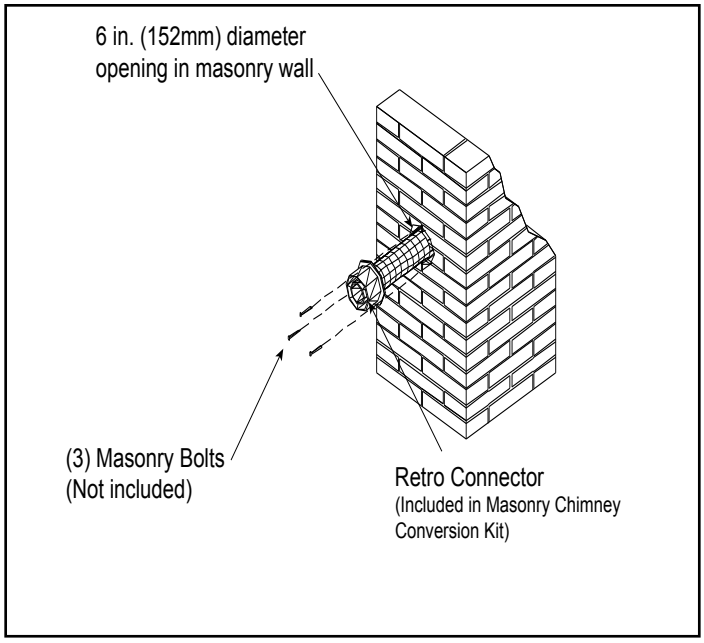

Figure 4.18

10. Slide wall thimble cover over retro connector and secure with masonry bolts. See Figure 4.19. If you have a framed wall in front of the masonry, use wood screws to mount wall thimble cover to framed wall, over retro connector and 10 in. (254mm) square framed opening See Figure 4.14. If needed, add a section of direct vent pipe to the retro connector in order to extend through the opening in the wall thimble cover.
11. The connection between the appliance and the retro connector may be completed with sections of direct vent pipe.

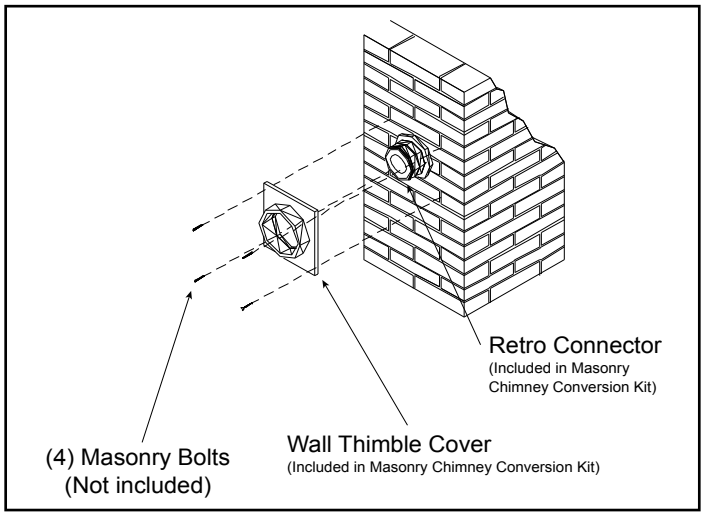

Figure 4.19

5 Vent Clearances and Framing

A. Pipe Clearances to Combustibles

WARNING! Risk of Fire! *Maintain air space clearance to vent.* ***DO NOT*** *pack insulation or other combustibles:*

- *Between ceiling firestops*
- *Between wall shield firestops*
- *Around vent system*

Failure to keep insulation or other material away from vent pipe may cause overheating and fire.

B. Wall Penetration Framing/Firestops

Combustible Wall Penetration

Whenever a combustible wall is penetrated, you must frame a hole for the wall shield firestop(s). The wall shield firestop maintains minimum clearances and prevents cold air infiltration.

- The opening must be framed on all four sides using the same size framing materials as those used in the wall construction.
- SLP pipe - A wall shield firestop must be placed on each side of an interior wall. A minimum 1-1/2 in. (38 mm) overlap of attached heat shields must be maintained.

Non-Combustible Wall Penetration

If the hole being penetrated is surrounded by non-combustible materials such as concrete, a hole with diameter one inch greater than the pipe is acceptable.

Whenever a non-combustible wall is penetrated, the wall shield firestop is only required on one side and no heat shield is necessary.

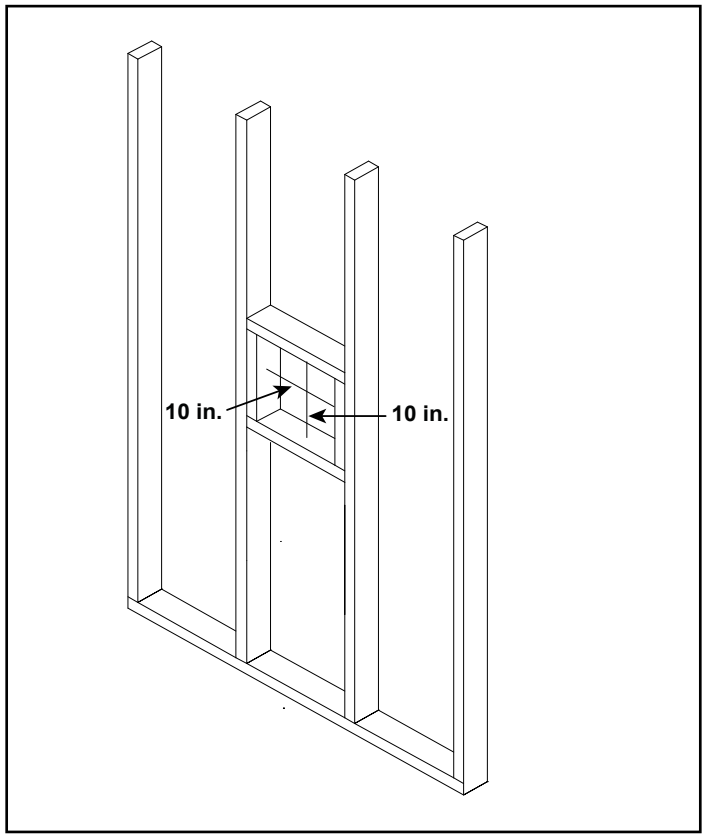

Figure 5.1 - Wall Penetration

C. Ceiling Firestop/Floor Penetration Framing

A ceiling firestop **MUST** be used between floors and attics.

- **SLP Pipe** - Frame opening 9 in. x 9 in. (229 mm x 229 mm) whenever the vent penetrates a ceiling/floor (see Figure 5.2).
- Frame the area with the same sized lumber as used in ceiling/floor joist.
- The ceiling firestop may be installed above or below the ceiling joists when installed with an attic insulation shield. It must be under joists between floors that are not insulated. Refer to Figure 5.3.
- Secure with three fasteners on each side.

***WARNING! Risk of Fire! DO NOT pack insu**lation around the vent. Insulation must be kept back from the pipe to prevent overheating.*

D. Install Attic Insulation Shield

***WARNING! Fire Risk. DO NOT** allow loose materials or insulation to touch vent. Hearth & Home Technologies requires the use of an attic shield.*

The International Fuel Gas Code requires an attic shield constructed of 26 gauge minimum steel that extends at least 2 in. (51 mm) above insulation.

- Attic insulation shields must meet specified clearances to combustible materials and be secured in place.
- An attic insulation shield kit is available from Hearth & Home Technologies. Contact your dealer to order. Install attic insulation shield according to instructions included with kit.

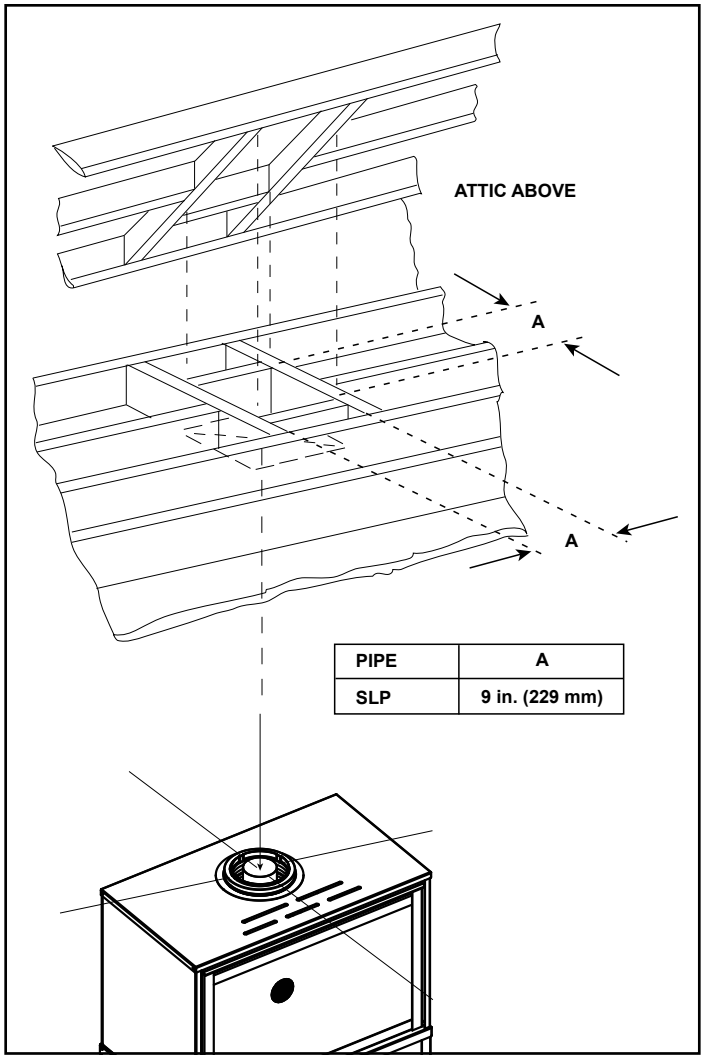

PIPE	A
SLP	9 in. (229 mm)

Figure 5.2 - Installing Ceiling Firestop

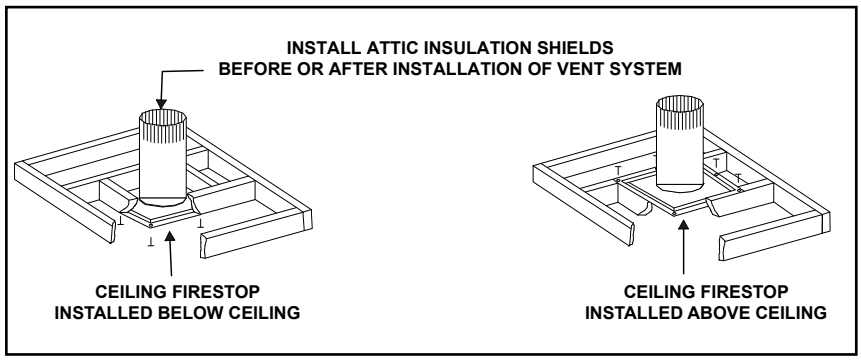

Figure 5.3 - Installing the Attic Shield

6 Appliance Preparation

A. Assemble Cabinet

CAUTION! Risk of Cuts, Abrasions or Flying Debris. *Wear protective gloves and safety glasses during installation. Sheet metal edges are sharp.*

1. Assemble cabinet lower left side to cabinet base using 2 screws. See Figure 6.1.

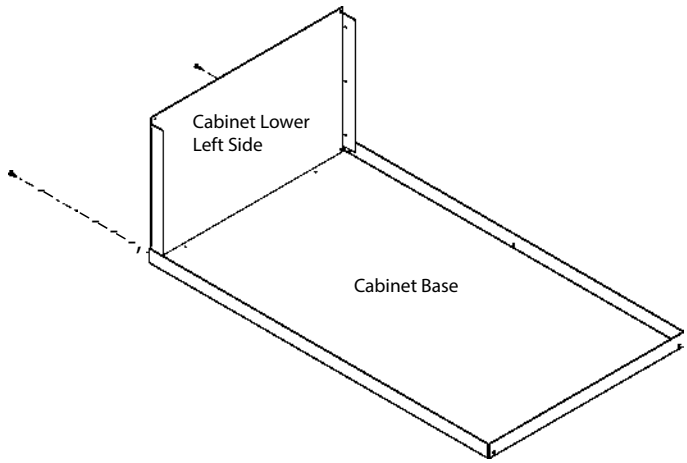

Figure 6.1

2. Assemble cabinet lower back to cabinet lower left side and cabinet base using 6 screws. See Figure 6.2.

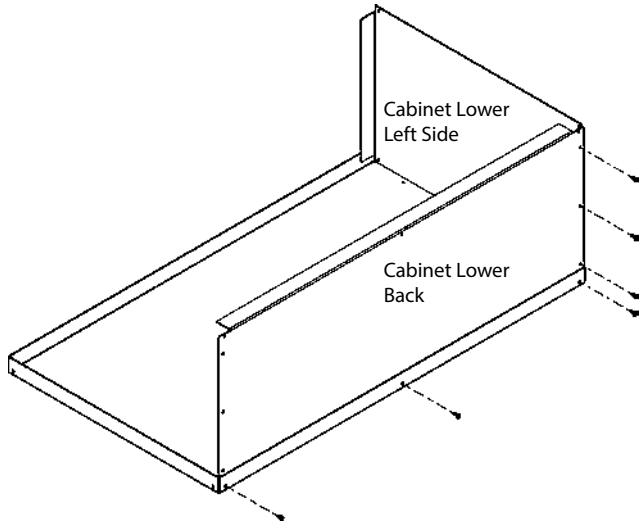

Figure 6.2

3. Assemble cabinet lower right side to cabinet base and cabinet lower back using 5 screws. See Figure 6.3.

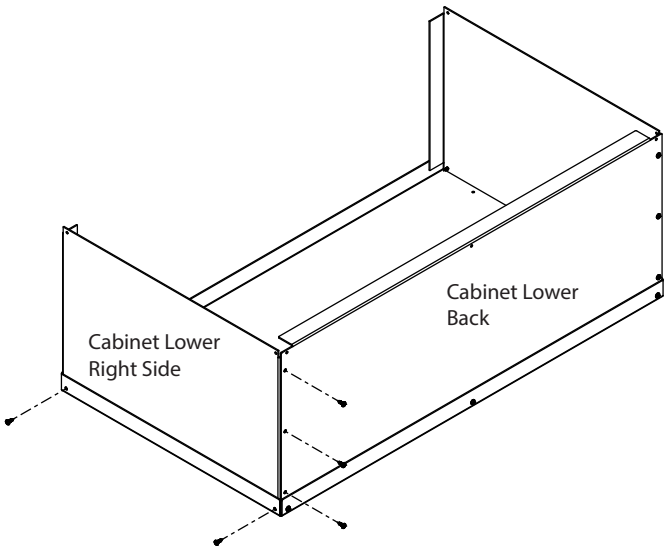

Figure 6.3

4. Assemble cabinet lower top to cabinet lower sides and cabinet lower back using 7 screws. See Figure 6.4.

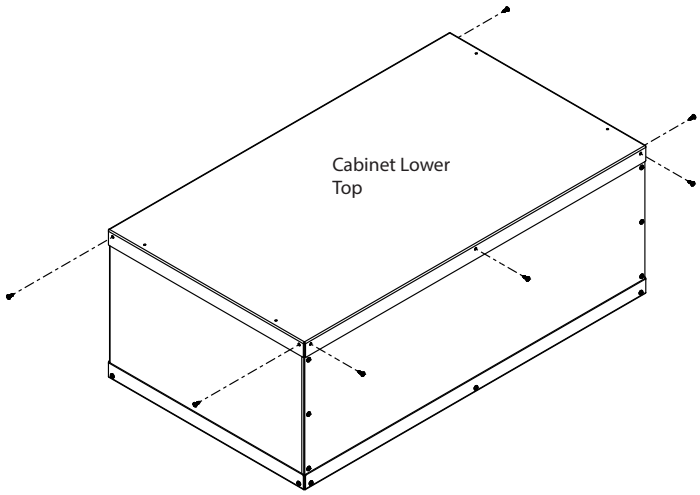

Figure 6.4

5. Assemble cabinet upper left side to cabinet lower top using 2 screws. See Figure 6.5.

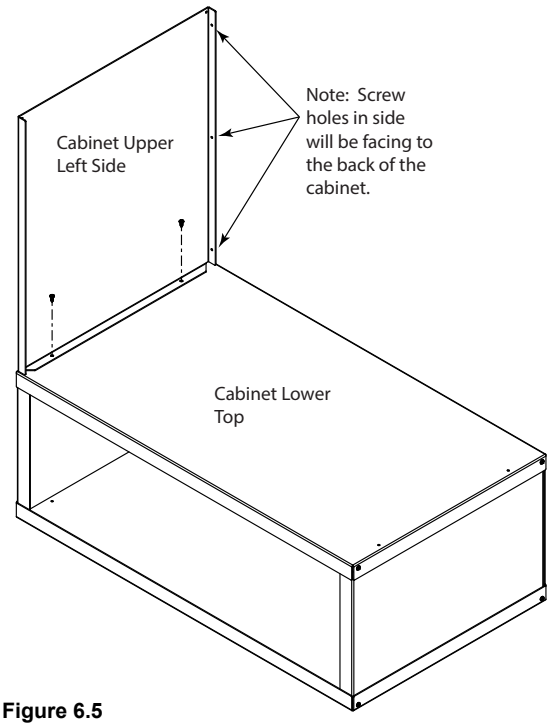

Figure 6.5

6. Assemble cabinet upper right side to cabinet lower top using 2 screws. See Figure 6.6.

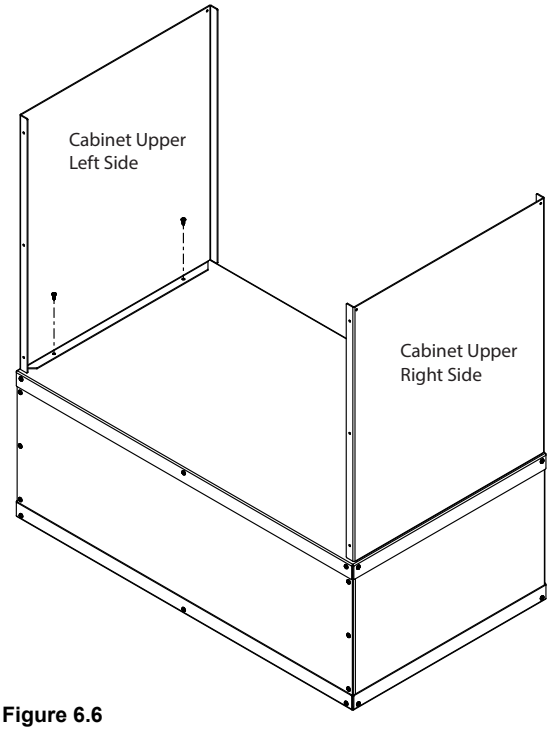

Figure 6.6

7. Assemble cabinet upper back to cabinet upper sides using 6 screws. See Figure 6.7.

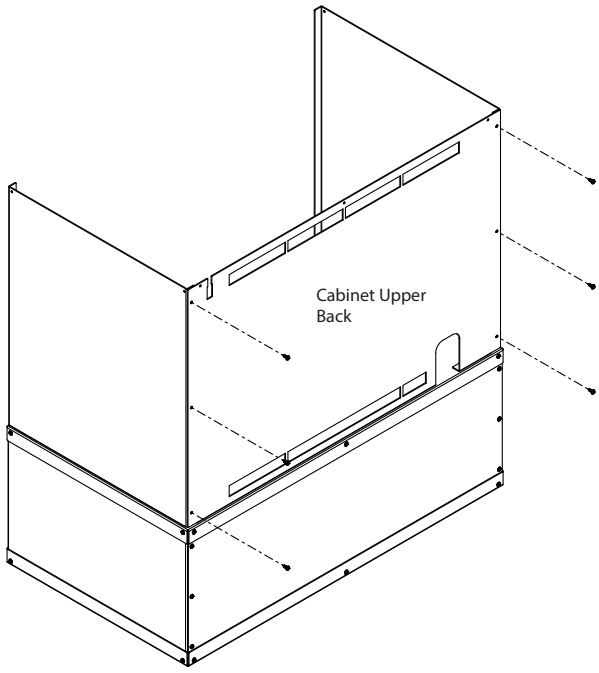

Figure 6.7

8. Install the jumper wire on the reset switch wire on the side of the insert. Leave the reset switch wire attached to the side of the insert. See Figure 6.8.

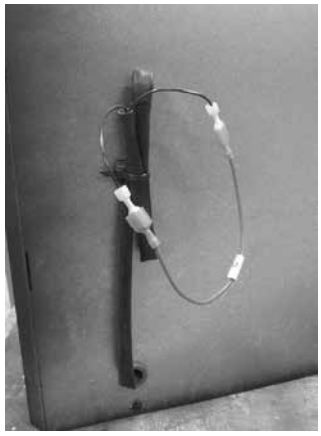

Figure 6.8

9. Install the splitter (SRV2187-198) on the black wire coming off the 6 pin wire harness on the IFT control. Connect the splitter to the black wire going to the battery pack USB port. See Figure 6.9.

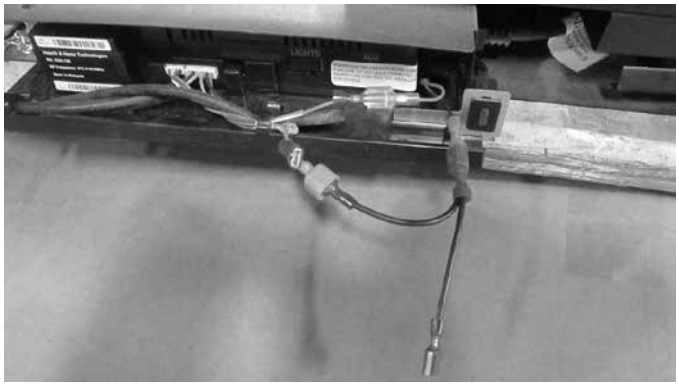

Figure 6.9

10. Insert the male connectors on the SRV30007499 wire through the grommet on the outer surround of the insert. The male connectors go inside of the insert. See Figure 6.10.

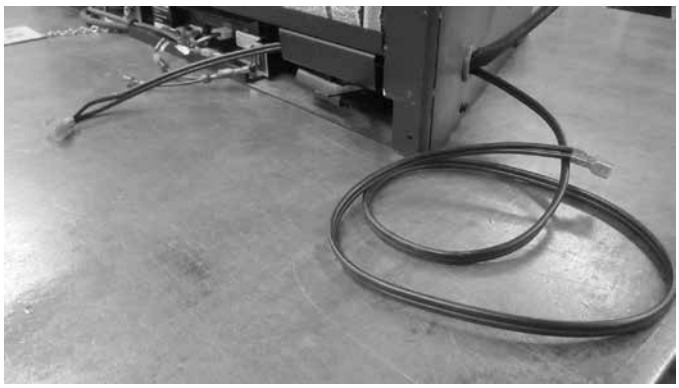

Figure 6.10

11. Install the male connectors from wire (SRV30007499) to the brown wire coming of the 6 pin wire harness on the IFT control and to the splitter. See Figure 6.11.

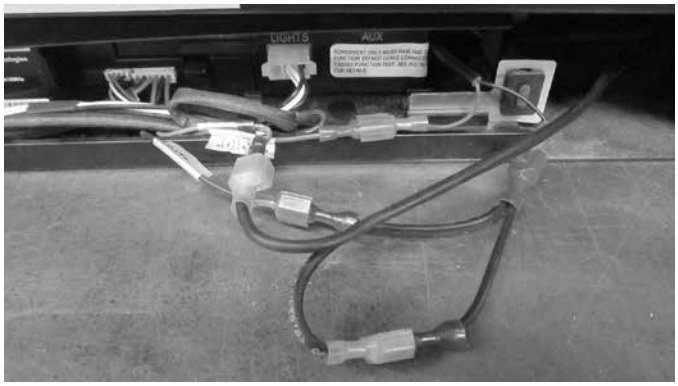

Figure 6.11

12. Install insert into cabinet by setting on cabinet lower top. See Figure 6.12.

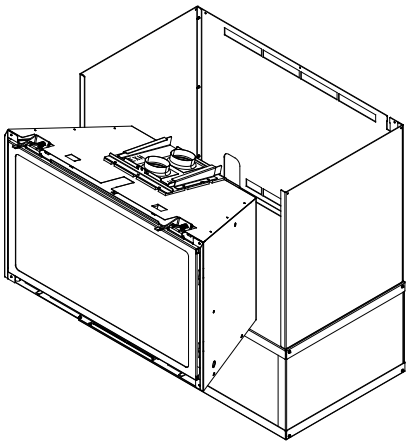

Figure 6.12

13. Feed the flexible gas line and power cord through the slot on the lower left hand side of the cabinet back. See Figure 6.13.

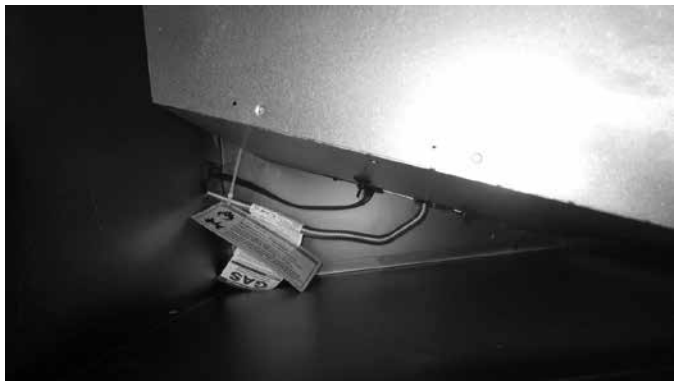

Figure 6.13

14. Remove slide plate guides, slide plate stop and slide plate assembly by removing the 6 screws holding the brackets to the top of the insert. See Figure 6.14.

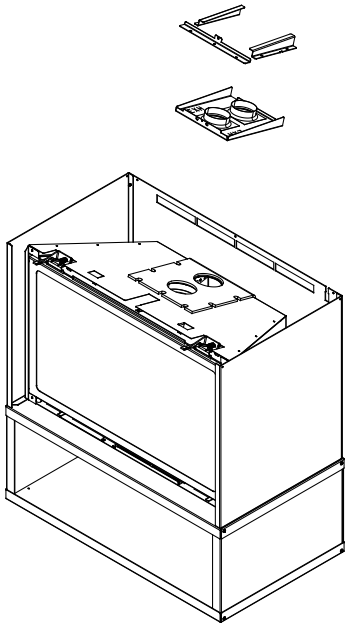

Figure 6.14

15. Inspect the slide plate gasket to make sure there are no tears in the gasket. Install the adapter weldment assembly to the top of the insert using the (3) #8 X 3/4” screws provided with the ADP-CK30 adapter kit. See Figure 6.15.

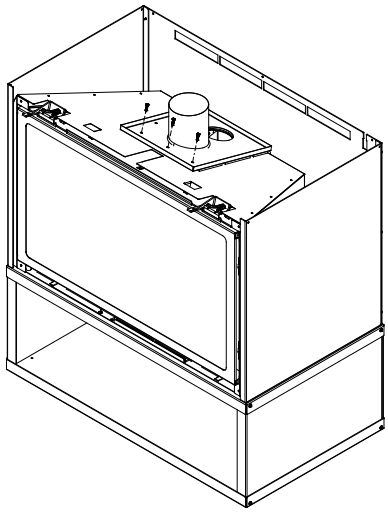

Figure 6.15

16. Install the adapter gasket by setting on top of the adapter weldment assembly and lining up the 4 holes in the gasket with the 4 screw holes in the weldment assembly. See Figure 6.16.

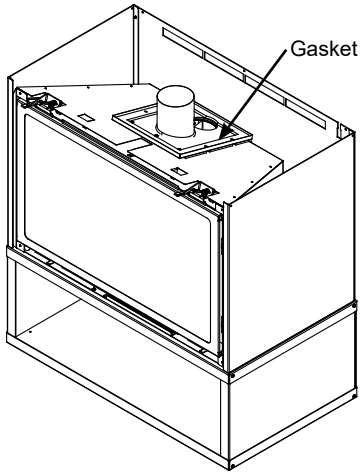

Figure 6.16

17. Install the top adapter assembly by setting on top of the adapter gasket and attaching with (4) #8 x ¾" screws provided. See Figure 6.17.

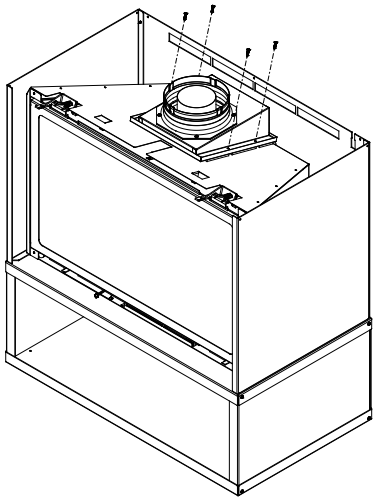

Figure 6.17

18. Install the shield on top of the insert by placing tabs from the shield into the open slots on top of the insert outer wrap. See Figure 6.18.

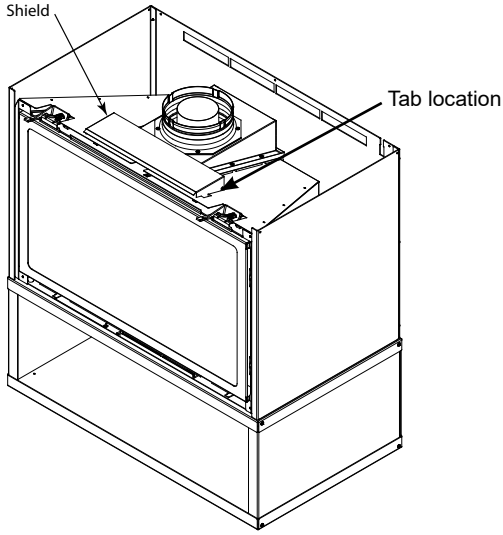

Figure 6.18

19. Install the switch by snapping into the slot in the cabinet upper back. See Figure 6.19.

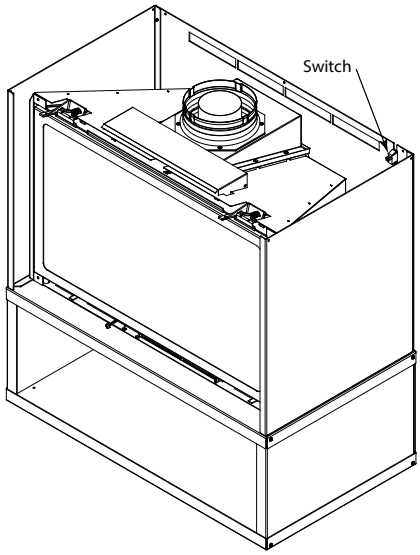

Figure 6.19

20. Connect the 1/4” insulated female connectors from wire (30007499) to the on/off switch. See Figure 6.20.

Figure 6.20

21. Install the top of the CK-30 cabinet by setting on top of the cabinet upper sides and cabinet upper back using 7 screws. See Figure 6.21.

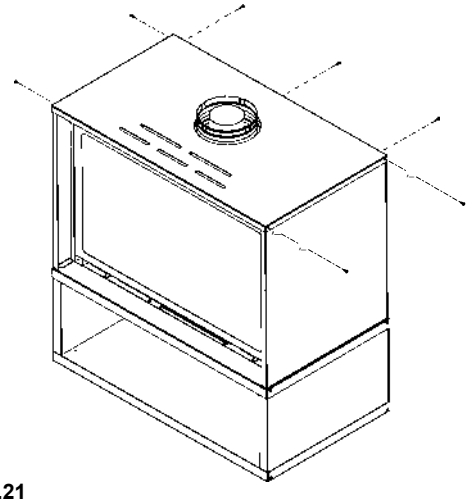

Figure 6.21

► 22. Refer to EXCURSION-II, RUBY30IN, RUBY30IL, SUPREME-I30-IFT, SUPREME-I30-BIR, SUPRM-I30LP-IFT, TRILLIANT30IN Insert Installation manual for instructions on how to set up the burner and logs for the gas insert.

23. Install the INFIT-30-BK front on the insert. Adjust the insert from side to side and front to back to make sure the inside fit front is level prior to attaching the venting. See Figure 6.22.

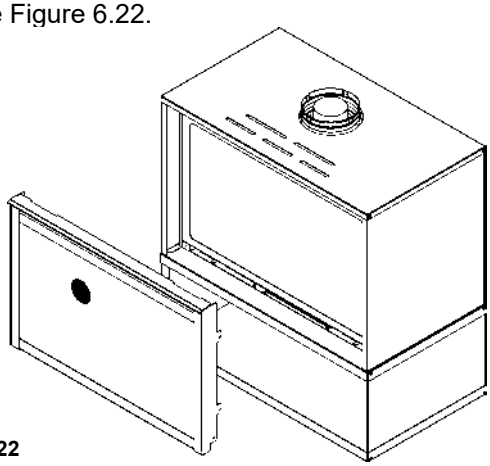

Figure 6.22

24. Install the trim ring around the collar by setting in place on top of the CK-30 cabinet. See Figure 6.23.

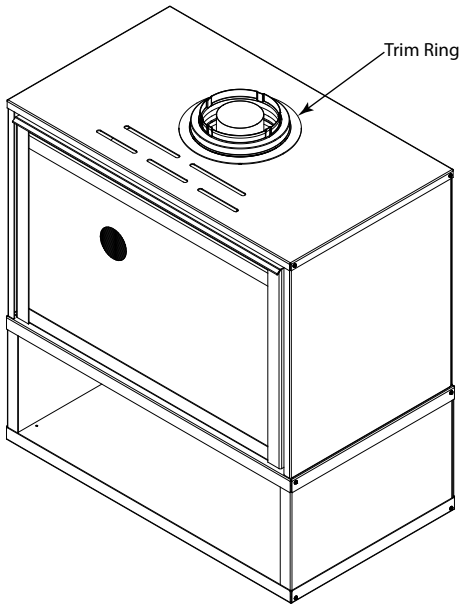

Figure 6.23

B. Securing and Leveling the Appliance

WARNING! Risk of Fire! *Prevent contact with combustible materials.*

WARNING! Risk of Fire! *Failure to maintain air space clearance may cause overheating and fire.*

1. Level the CK-30 cabinet from side to side and front to back.
2. Shim the CK-30 cabinet as necessary. It is acceptable to use wood shims underneath the CK-30 cabinet.
3. For mobile home installations, secure the CK-30 cabinet to the floor using screws through the holes in the bottom of the cabinet. See Figure 6.24.

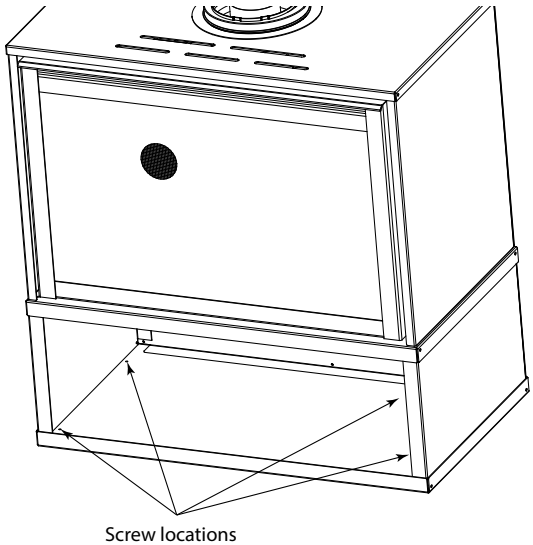

Figure 6.24

A. Assemble Vent Sections

To attach the first vent component to the starting collars of the appliance:

- Lock the vent components into place by sliding the pipe section onto the collar.
- Align the seam of the pipe and seam of collar to allow engagement. Rotate the vent component to lock into place. Use this procedure for all vent components. See Figure 7.2.
- Continue adding vent components, locking each succeeding component into place.
- Ensure that each succeeding vent component is securely fitted and locked into the preceding component.

Required Commercial, Multi-family (Multi-level exceeding two stories), or High-Rise Applications

For installation into a commercial, multi-family (multi-level exceeding two stories) or high-rise applications: All outer pipe joints must be sealed with high temperature silicone (300ºF minimum continuous exposure rating), including the slip section that connects directly to the horizontal termination cap.

- Apply a bead of silicone sealant (300ºF minimum continuous exposure rating) inside the female outer pipe joint prior to joining sections. See Figure 7.1.
- Only outer pipes need to be sealed. All unit collar, pipe, slip section, elbow and cap outer flues shall be sealed in this manner, unless otherwise stated.

***WARNING! Risk of Fire or Explosion! DO NOT** break silicone seals on slip sections. Use care when removing termination cap from slip pipe. If slip section seals are broken during removal of the termination cap, vent may leak.*

Figure 7.1 - High Temperature Silicone Sealant

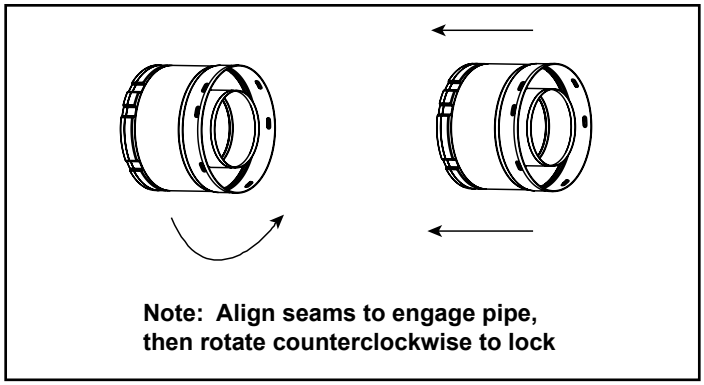

Figure 7.2 - Adding Venting Components

B. Assemble Slip Sections

- Slide the inner flue of the slip section into the inner flue of the pipe section and the outer flue of the slip section over the outer flue of the pipe section. See Figure 7.3.
- Slide together to the desired length.

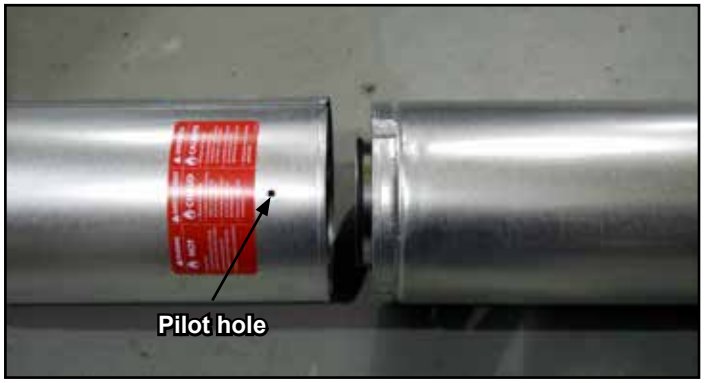

Figure 7.3 - Slip Section Pilot Holes

- Maintain a 1-1/2 in. (38 mm) overlap between the slip section and the pipe section.
- Secure the pipe and slip section with three screws no longer than 1/2 in. (13 mm), using the pilot holes in the slip section. See Figure 7.4.

Figure 7.4 - Screws into Slip Section

- Continue adding pipe as necessary following instructions in “Assembling Pipe Sections.”

NOTICE: *If slip section is too long, the inner and outer flues of the slip section can be cut to the desired length.*

- *Apply a bead of silicone sealant (300°F minimum continuous exposure rating) inside the female outer pipe joint prior to joining sections.*
- *Only outer pipes are sealed, sealing the inner flue is not required.*
- *All unit collar, pipe, slip section, elbow and cap outer flues shall be sealed.*

C. Secure the Vent Sections

- Vertical runs originating off the top of the appliance, with no offsets, must be supported every 8 ft. (2.44 m) after the maximum allowed 25 ft. (7.62 m) of unsupported rise.
- Vertical runs originating off the rear of the appliance, or after any elbow, must be supported every 8 ft. (2.44 m).
- Horizontal runs must be supported every 5 feet (1.52 m).
- Vent supports or plumbers strap (spaced 120º apart) may be used to support vent sections. See Figures 7.5 and 7.6.
- Wall shield firestops may be used to provide horizontal support to vent sections.
- SLP ceiling firestops have tabs that may be used to provide vertical support.

WARNING! Risk of Fire, Explosion or Asphyxiation! *Improper support may allow vent to sag and separate. Use vent run supports and connect vent sections per installation instructions.* ***DO NOT*** *allow vent to sag below connection point to appliance.*

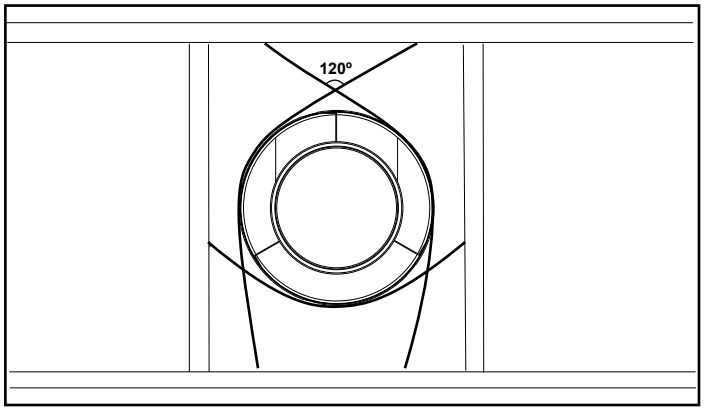

Figure 7.5 - Securing Vertical Pipe Sections

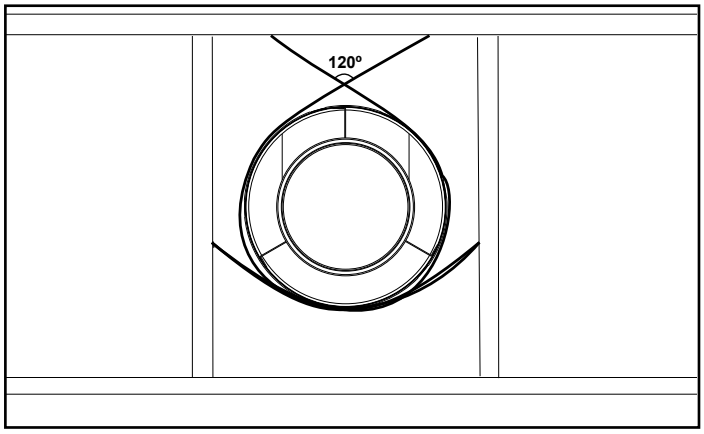

Figure 7.6 - Securing Horizontal Pipe Sections

D. Disassemble Vent Sections

- Rotate either section (see Figure 7.7) so the seams on both pipe sections are aligned as shown in Figure 7.8.
- Pull carefully to separate the pieces of pipe.

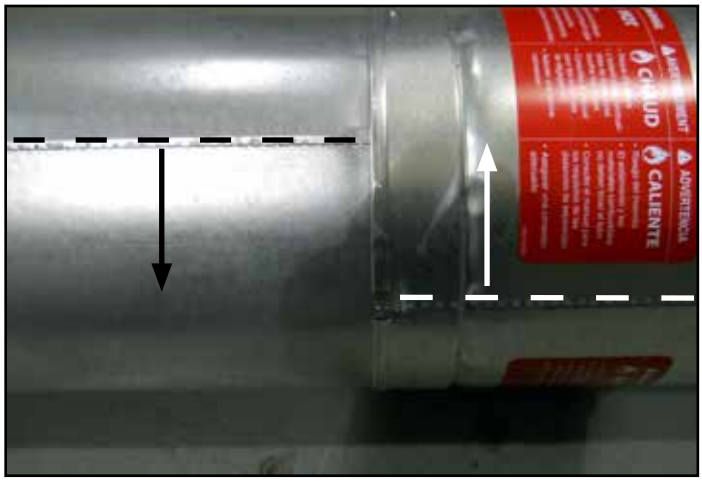

Figure 7.7 - Rotate Seams for Disassembly

Figure 7.8 - Align and Disassemble Vent Sections

Install Decorative Ceiling Components

A decorative ceiling thimble can be installed on a flat ceiling through which the vent passes. The decorative ceiling thimble is used to cover the firestop.

- Seal the gap between the vent pipe and firestop using high temperature silicone (300ºF minimum continuous exposure rating) to prevent cold air infiltration.
- Install the decorative ceiling thimble by sliding it up to the ceiling and attaching it using the provided screws.

A decorative cathedral ceiling support box can be installed on a cathedral ceiling through which the vent passes.

- Use a plumb-bob to mark the center line of the venting system on the ceiling and drill a small hole through the ceiling and roof at this point. Locate the hole and mark the outline of the cathedral ceiling support box on the outside roof.
- Remove shingles or other roof covering as necessary to cut the rectangular hole for the support box. Cut the hole 1/8 in. (3 mm) larger than the support box outline.
- Lower the support box through the hole in the roof until its bottom is at least 2 in. (51 mm) below the ceiling (Figure 7.9).
- Level the support box both vertically and horizontally and temporarily tack it in place through the inside walls into the roof sheathing.
- Use tin snips to cut the support box from the top corners down to the roof line and fold the resulting flaps to the roof. See Figure 7.10.
- Nail the flaps to the roof AFTER running a bead of non hardening sealant between the flaps and the roof.

WARNING! Risk of Fire! *Clean out ALL materials from inside the support box and complete the vertical vent run and termination.*

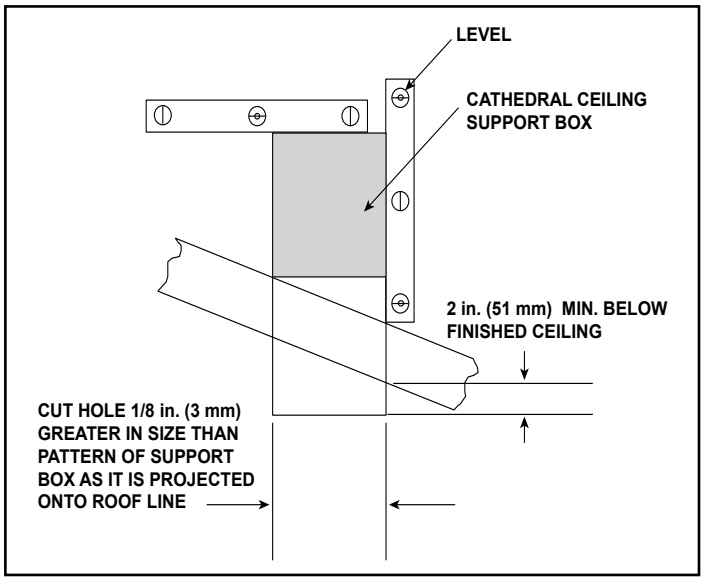

Figure 7.9

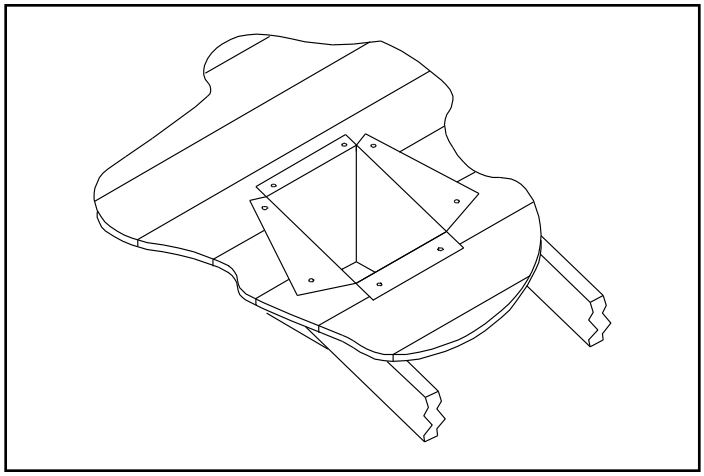

Figure 7.10

E. Vertical Termination Requirements

Install Metal Roof Flashing

- See minimum vent heights for various pitched roofs (Figure 7.11) to determine the length of pipe to extend through the roof.
- Slide the roof flashing over the pipe sections extending through the roof as shown in Figure 7.12.

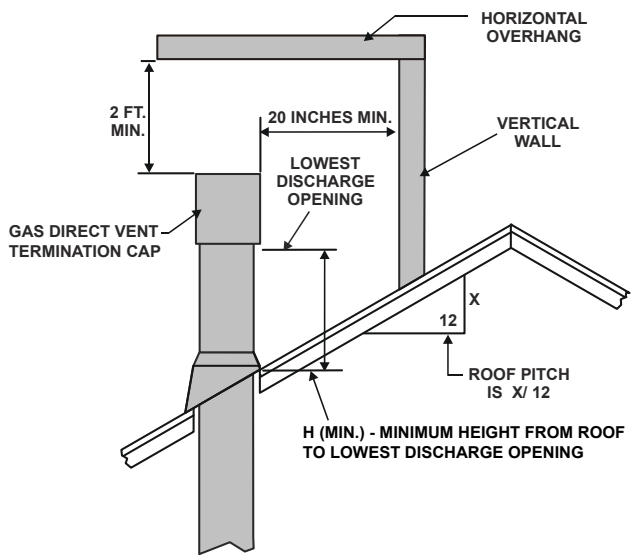

Roof Pitch	H (Min.) Ft.
Flat to 6/12	1.0*
Over 6/12 to 7/12	1.25*
Over 7/12 to 8/12	1.5*
Over 8/12 to 9/12	2.0*
Over 9/12 to 10/12	2.5*
Over 10/12 to 11/12	3.25
Over 11/12 to 12/12	4.0
Over 12/12 to 14/12	5.0
Over 14/12 to 16/12	6.0
Over 16/12 to 18/12	7.0
Over 18/12 to 20/12	7.5
Over 20/12 to 21/12	8.0

* 3 foot minimum in snow regions

Figure 7.11 - Minimum Height From Roof To Lowest Discharge Opening

NOTICE: *Failure to properly caulk the roof flashing and pipe seams may permit entry of water.*

- Caulk the gap between the roof flashing and the outside diameter of the pipe.
- Caulk the perimeter of the flashing where it contacts the roof surface. See Figure 7.12.
- Caulk the overlap seam of any exposed pipe sections that are located above the roof line.

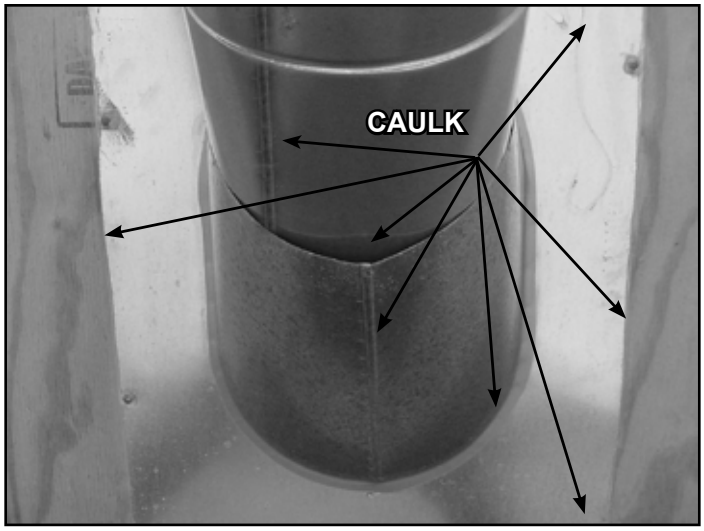

Figure 7.12

- Any occupied areas above the first floor, including closets and storage spaces, which the vertical vent passes through must be enclosed. See Figure 7.13 for required clearances between vent and enclosure.

WARNING! Risk of Fire! *Maintain air space clearance to vent.* ***DO NOT*** *pack insulation or other combustibles around vent system. Failure to keep insulation or other material away from vent pipe may cause overheating and fire.*

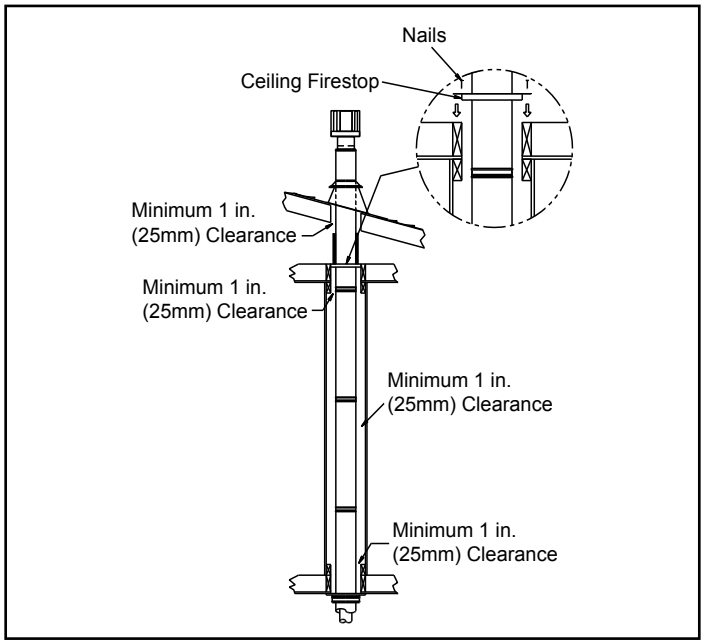

Figure 7.13

Assemble and Install Storm Collar

CAUTION! Risk of Cuts, Abrasions or Flying Debris. *Wear protective gloves and safety glasses during installation. Sheet metal edges are sharp.*

- Slide the storm collar onto the exposed pipe section and align brackets.
- Insert a bolt (provided) through the brackets and install nut. Do not completely tighten.

Figure 7.14 - Insert Bolt into Brackets

- Slide the assembled storm collar down the pipe section until it rests on the roof flashing (see Figure 7.14).
- Tighten nut and make sure the collar is tight against the pipe section.
- Caulk around the top of the storm collar. See Figure 7.15.

Install Vertical Termination Cap

- Attach the vertical termination cap by sliding the inner collar of the cap into the inner flue of the pipe section while placing the outer collar of the cap over the outer flue of the pipe section.
- Secure the cap by driving three self-tapping screws (supplied) through the pilot holes in the outer collar of the cap into the outer flue of the pipe (see Figure 7.15).

Figure 7.15

8 Electrical Information

► **(Refer to EXCURSION-II, RUBY30IN, RUBY30IL, SUPREME-I30-IFT, SUPREME-I30-BIR OR SUPRM-I30LP-IFT, TRILLIANT30IN Insert Installation Manual)**

A. General Information

WARNING! Risk of Shock or Explosion! DO NOT *wire 110-120 VAC to the valve or to the appliance wall switch. Incorrect wiring will damage controls.*

NOTICE: *This appliance must be electrically wired and grounded in accordance with local codes or, in the absence of local codes, with* **National Electric Code ANSI/NFPA 70-latest edition** *or the* **Canadian Electric Code CSA C22.1.**

- Plug the cord from the appliance junction box to unswitched 110-120 VAC. This is required for proper operation of the appliance.
- A 110-120 VAC circuit for this product must be protected with ground-fault circuit-interrupter protection, in compliance with the applicable electrical codes, when it is installed in locations such as in bathrooms or near sinks.
- Low voltage and 110-120 VAC voltage cannot be shared within the same wall box.

WARNING! Risk of Shock! *Plug 3-pronged (grounding) plug directly into a properly grounded 3-pronged receptacle. DO NOT cut or remove grounding prong from plug.*

Accessories Requirements

- This appliance may be used with a wall switch, wall mounted thermostat and/or a remote control.

Wiring for optional Hearth & Home Technologies approved accessories should be done now to avoid reconstruction. Follow instructions that come with those accessories.

Electrical Service and Repair

WARNING! Risk of Shock! *Label all wires prior to disconnection when servicing controls. Wiring errors can cause improper and dangerous operation. Verify proper operation after servicing.*

WARNING! Risk of Shock! *Replace damaged wire with type 105º C rated wire. Wire must have high temperature insulation.*

►B. Wiring Requirements

- **(Refer to EXCURSION-II, RUBY30IN, RUBY30IL, SUPREME-I30-IFT, SUPREME-I30-BIR OR SUPRM-I30LP-IFT, TRILLIANT30IN Insert Installation Manual)**

9 Gas Information

▶ **(Refer to EXCURSION-II, RUBY30IN, RUBY30IL, SUPREME-I30-IFT, SUPREME-I30-BIR OR SUPRM-I30LP-IFT, TRILLIANT30IN Insert Installation Manual)**

10 Reference Materials

A. Vent Components Diagrams

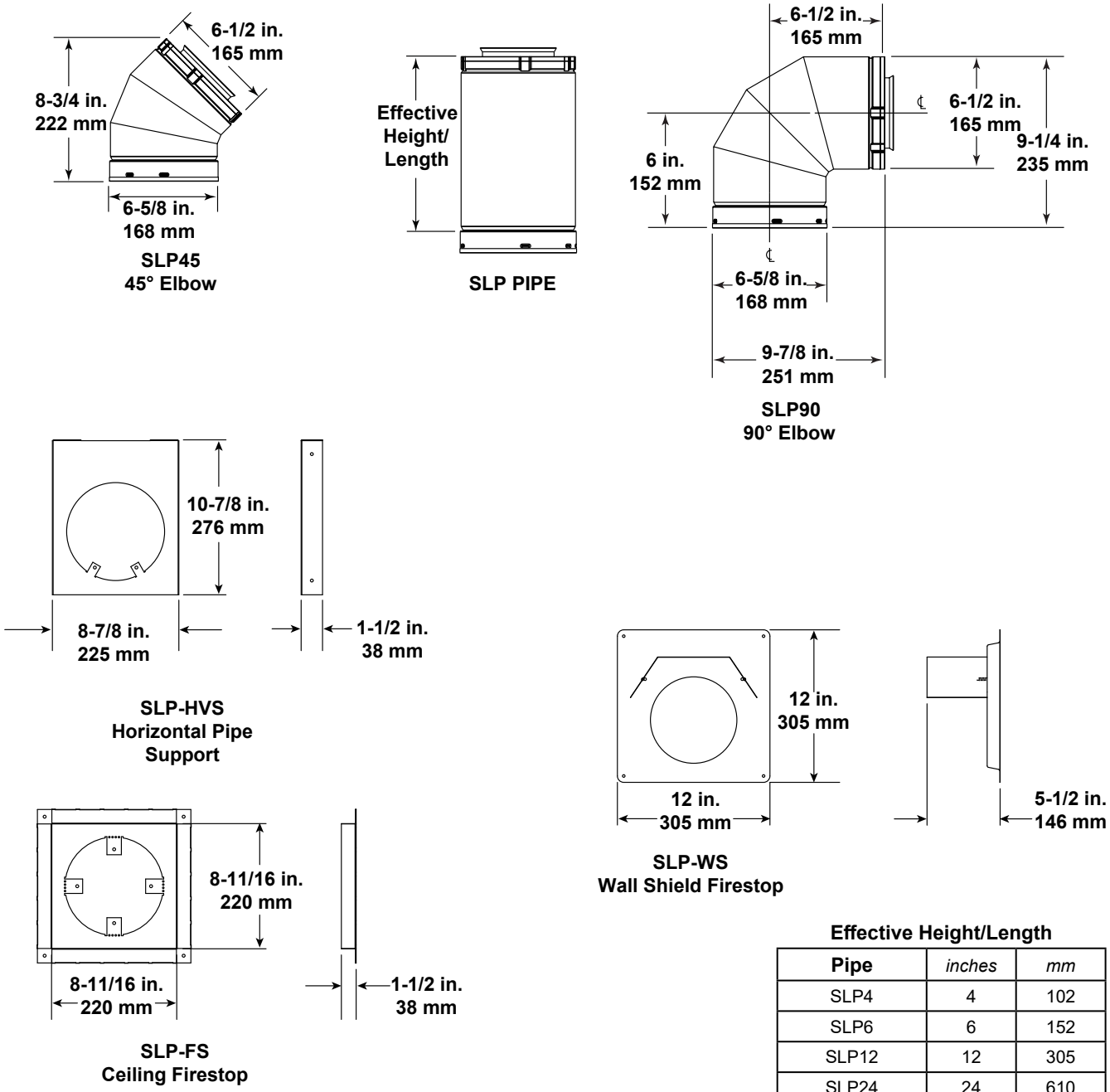

Effective Height/Length

Pipe	*inches*	*mm*
SLP4	4	102
SLP6	6	152
SLP12	12	305
SLP24	24	610
SLP36	36	914
SLP48	48	1219
SLP6A	2 - 6	51 - 152
SLP12A	2 - 12	51 - 305
SLP-FLEX-2	24	610
SLP-FLEX-3	36	914
SLP-FLEX-5	60	1524
SLP-FLEX-10	120	3048

Figure 11.1 - SLP Series Vent Components

A. Vent Components Diagrams *(continued)*

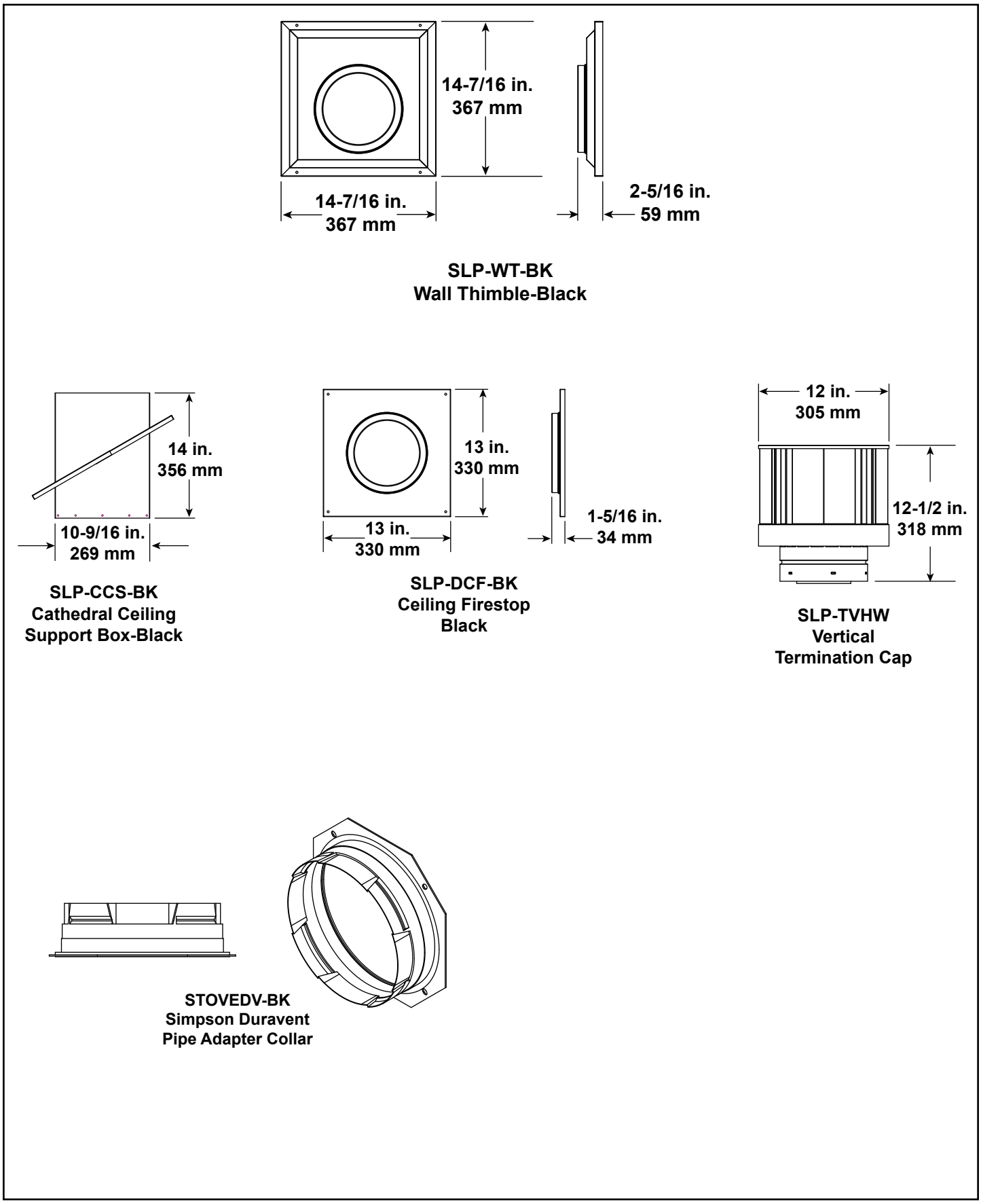

Figure 11.2 - SLP Series Vent Components

B. Vent Components List

Description	HHT SL-P M= Multi Pack (6)	Simpson Dura-Vent DirectVent Pro	ICC Chimney
4” Pipe Length, Galvanized	SLP4M	-	-
4” Pipe Length, Black	SLP4-BK	-	-
6” Pipe Length, Galvanized	SLP6M	46-DVA-06	DL6
6” Pipe Length, Black	SLP6-BK	46-DVA-06B	DL6B
7” Pipe Length, Galvanized	-	-	-
7” Pipe Length, Black	-	-	-
9” Pipe Length, Galvanized	-	46-DVA-09	DL9
9” Pipe Length, Black	-	46-DVA-09B	DL9B
12” Pipe Length, Galvanized	SLP12M	46-DVA-12	DL1
12” Pipe Length, Black	SLP12-BK	46-DVA-12B	DL1B
18” Pipe Length, Galvanized	-	46-DVA-18	-
18” Pipe Length, Black	-	46-DVA-18B	-
24” Pipe Length, Galvanized	SLP24M	46-DVA-24	DL2
24” Pipe Length, Black	SLP24-BK	46-DVA-24B	DL2B
36” Pipe Length, Galvanized	SLP36M	46-DVA-36	DL3
36” Pipe Length, Black	SLP36-BK	46-DVA-36B	DL3B
48” Pipe Length, Galvanized	SLP48M	46-DVA-48	DL4
48” Pipe Length, Black	SLP48-BK	46-DVA-48B	DL4B
Adjustable Length, 3”-6”, Black	SLP6A-B	-	-
Adjustable Length, 3”-6”, Galvanized	SLP6AM	-	-
Adjustable Length, 3”-7”, Galvanized	-	46DVA-08A	-
Adjustable Length, 3”-7”, Black	-	46DVA-08AB	-
Adjustable Length, 3”-12”, Black	SLP12A-BK	-	DLS1
Adjustable Length, 3”-12”, Galvanized	SLP12AM	-	DLS1B
Adjustable Length, 3”-14.5”, Galvanized	-	46DVA-16A	-
Adjustable Length, 3”-14.5”, Black	-	46DVA-16AB	-
Adjustable Length, 7”, Galvanized	-	-	-
Adjustable Length, 7”, Black	-	-	-
Adjustable Length, 11”-14”, Galvanized	-	-	-
Adjustable Length, 11”-14”, Black	-	-	-
Adjustable Length, 12”, Galvanized	-	4DT-AJ12	-
Adjustable Length, 12”, Black	-	4DT-AJ12B	-
Adjustable Length, 16”, Galvanized	-	46DVA-16A	DLS2
Adjustable Length, 16”, Black	-	46DVA-16AB	DLS2B
Adjustable Length, 24”, Galvanized	-	-	-
Adjustable Length, 24”, Black	-	-	-
2’ Flexible Pipe Length	SLP-FLEX-2	-	-
3’ Flexible Pipe Length	SLP-FLEX-3	-	-
5’ Flexible Pipe Length	SLP-FLEX-5	-	-
10’ Flexible Pipe Length	SLP-FLEX-10	-	-
3” x 35’ Flex Extension	-	3DFA-35	-
4” x 35’ Flex Extension	-	4DFA-35	-
45° Elbow, Galvanized	SLP45M	-	4DE45
45° Elbow, Black	SLP45-BK	See Swivel	4DE45B
45° Elbow, Swivel, Galvanized	-	46DVA-E45	-

B. Vent Components List *(Cont)*

Description	HHT SL-P M= Multi Pack (6)	Simpson Dura-Vent DirectVent Pro	ICC Chimney
45° Elbow, Swivel, Black	-	46DVA-E45B	-
90° Elbow, Galvanized	SLP90M	See Swivel	4DE90
90° Elbow, Swivel, Galvanized	-	46DVA-E90	-
90° Elbow, Swivel, Black	-	46DVA-E90B	4DE90B
Adjustable Flashing, 0/12-6/12	SLP-RF6M	46DVA-F6	4FA
Adjustable Flashing, 7/12-12/12	SLP-RF12M	46DVA-F12	4FB
Attic Insulation Shield - Cold Climates 36”	-	-	-
Attic Insulation Shield 12”	SLP-AS2M	-	-
Attic Insulation Shield, Adjustable 11”-20”	-	46-DVA-IS	4AS
Cathedral Support Box	SLP-CCS-BK	46DVA-CS	4SS
Ceiling Support	-	46DVA-DC	4CS
Decorative Ceiling Firestop - Black	SLP-DCF-BK	-	4TR
Decorative Radius Cover	DRC-RADIUS	-	-
Firestop Spacer/Ceiling Firestop	SLP-FSM	46DVA-FS	-
Masonry Chimney Conversion Kit (Includes Cap Adapter, 18 x 18 Flashing, Ceiling Support/Wall Thimble and Retro Connectors)	-	46DVA-KMC	-
Offset Support	-	46DVA-ES	OS
Offset Wall Thimble, Black	SLP-WT-BK	-	-
Silicone Roof Flashing, 4” to 8” pipes (6)	RF4-8M	-	-
Storm Collar	SLP-SCM	46DVA-SC	SC
Trim Plate, Black	-	-	4TP
Wall Support Band	SLP-HVSM	46-DVA-WS	WS
Wall Thimble Support Box/Ceiling Support	-	-	4WT
Wall Thimble, Black	SLP-WSM	46DVA-WT	-
TERMINATION CAPS & KITS			
Stove Adaptor Kit (Vertical Cap Kit) (Includes 30’- 4” Flex, Adapters, Wall Thimble, Masonry ZC Flashing and 991DA Vertical Cap)	LINK-STOVE	-	-
Vertical Termination Cap	SLP-TVHW	46DVA-VCH	VT

NOTES: [1]BEFORE CUTTING ANY HOLES CHECK PIPE MANUFACTURERS CURRENT INSTRUCTIONS.
[2]EACH PIPE MANUFACTURER HAS THEIR OWN LIST OF PARTS FOR KITS.
[3]SL IS NOT INTERCHANGEABLE WITH SLP.

Hearth & Home Technologies
7571 215th Street West, Lakeville, MN 55044
www.hearthnhome.com

Please contact your Hearth & Home Technologies dealer with any questions or concerns.
For the location of your nearest dealer,
please visit www.hearthnhome.com.

Printed in U.S.A. - Copyright 2014