Optoma

DLP® Projector

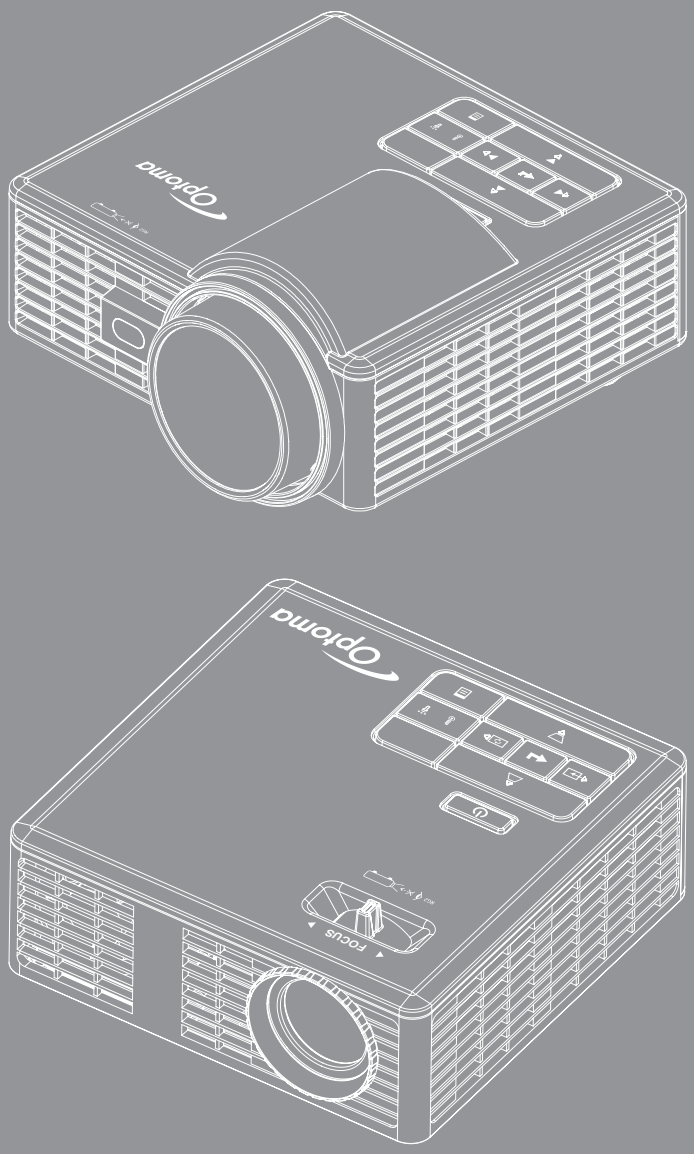

User manual

HDMI™ HIGH DEFINITION MULTIMEDIA INTERFACE

PICTURE BY DLP® TEXAS INSTRUMENTS

TABLE OF CONTENTS

COPYRIGHT 4

Declaration Notice for Free and Open Source Software 4
Free and Open Source Software Notice 4
Licenses 5

SAFETY 9

Important Safety Instruction 9
Safety Information 10
Cleaning the Lens 10
Copyright 11
Disclaimer 11
Trademark Recognition 11
FCC 11
Declaration of Conformity for EU countries 12
WEEE 12

INTRODUCTION 13

Package overview 13
Standard accessories 13
Optional accessories 13
Product overview 14
Connections 16
Keypad 18
Remote control 19

SETUP AND INSTALLATION 20

Installing the projector 20
Connecting sources to the projector 22
Adjusting the projector image 23
Adjusting the projector focus 24
Remote setup 25

USING THE PROJECTOR 27

Powering on / off the projector 27
Selecting an input source 30
Home screen overview 31
System date and time 31
Projector settings menu (OSD) 32
OSD Menu tree 33
Selecting an input source 44
Selecting an app 45

ADDITIONAL INFORMATION 48

Compatible resolutions *48*
Multimedia support format *49*
Image size and projection distance *51*
Tripod mount the projector *53*
IR remote control codes *54*
Troubleshooting *56*
Warning indicators *58*
Specifications *60*
Optoma global offices *61*

COPYRIGHT

Copyright (C) 2024 by Optoma Corporation

ALL RIGHTS RESERVED.

The copyright declaration applies to any part of the product, however if the declaration and Free and Open Source license requirements are in explicit conflict, the FOSS license prevails.

Declaration Notice for Free and Open Source Software

The software included in this product contains copyrighted software that is originally licensed under the Free and Open Source Software licenses, such as Apache License 2.0, and SIL Open Font License (OFL). The related notices and disclaimers are described below.

Free and Open Source Software Notice

Roboto Light

- License Full Name: Apache License 2.0
- SPDX Short Identifier: Apache-2.0
- Modified Status: No
- Copyright Notice: Copyright 2011 Google Inc. Licensed under the Apache License, Version 2.0 (the “License”); you may not use this file except in compliance with the License. You may obtain a copy of the License at
  http://www.apache.org/licenses/LICENSE-2.0

  Unless required by applicable law or agreed to in writing, software distributed under the License is distributed on an “AS IS” BASIS, WITHOUT WARRANTIES OR CONDITIONS OF ANY KIND, either express or implied. See the License for the specific language governing permissions and limitations under the License.

Noto Serif KR

- License Full Name: SIL Open Font License 1.1
- SPDX Short Identifier: OFL-1.1
- Modified Status: No
- Copyright Notice: Copyright 2017 Adobe Systems Incorporated (http://www.adobe.com/)

  This Font Software is licensed under the SIL Open Font License, Version 1.1.

  This license is copied below, and is also available with a FAQ at: https://scripts.sil.org/OFL

Licenses

Apache License, Version 2.0, January 2004

http://www.apache.org/licenses/

TERMS AND CONDITIONS FOR USE, REPRODUCTION, AND DISTRIBUTION

1. Definitions.

"**License**" shall mean the terms and conditions for use, reproduction, and distribution as defined by Sections 1 through 9 of this document.

"**Licensor**" shall mean the copyright owner or entity authorized by the copyright owner that is granting the License.

"**Legal Entity**" shall mean the union of the acting entity and all other entities that control, are controlled by, or are under common control with that entity. For the purposes of this definition, "**control**" means (i) the power, direct or indirect, to cause the direction or management of such entity, whether by contract or otherwise, or (ii) ownership of fifty percent (50%) or more of the outstanding shares, or (iii) beneficial ownership of such entity.

"**You**" (or "**Your**") shall mean an individual or Legal Entity exercising permissions granted by this License.

"**Source**" form shall mean the preferred form for making modifications, including but not limited to software source code, documentation source, and configuration files.

"**Object**" form shall mean any form resulting from mechanical transformation or translation of a Source form, including but not limited to compiled object code, generated documentation, and conversions to other media types.

"**Work**" shall mean the work of authorship, whether in Source or Object form, made available under the License, as indicated by a copyright notice that is included in or attached to the work (an example is provided in the Appendix below).

"**Derivative Works**" shall mean any work, whether in Source or Object form, that is based on (or derived from) the Work and for which the editorial revisions, annotations, elaborations, or other modifications represent, as a whole, an original work of authorship. For the purposes of this License, Derivative Works shall not include works that remain separable from, or merely link (or bind by name) to the interfaces of, the Work and Derivative Works thereof.

"**Contribution**" shall mean any work of authorship, including the original version of the Work and any modifications or additions to that Work or Derivative Works thereof, that is intentionally submitted to Licensor for inclusion in the Work by the copyright owner or by an individual or Legal Entity authorized to submit on behalf of the copyright owner. For the purposes of this definition, "**submitted**" means any form of electronic, verbal, or written communication sent to the Licensor or its representatives, including but not limited to communication on electronic mailing lists, source code control systems, and issue tracking systems that are managed by, or on behalf of, the Licensor for the purpose of discussing and improving the Work, but excluding communication that is conspicuously marked or otherwise designated in writing by the copyright owner as "**Not a Contribution.**"

"**Contributor**" shall mean Licensor and any individual or Legal Entity on behalf of whom a Contribution has been received by Licensor and subsequently incorporated within the Work.

2. Grant of Copyright License. Subject to the terms and conditions of this License, each Contributor hereby grants to You a perpetual, worldwide, non-exclusive, no-charge, royalty-free, irrevocable copyright license to reproduce, prepare Derivative Works of, publicly display, publicly perform, sublicense, and distribute the Work and such Derivative Works in Source or Object form.

3. Grant of Patent License. Subject to the terms and conditions of this License, each Contributor hereby grants to You a perpetual, worldwide, non-exclusive, no-charge, royalty-free, irrevocable (except as stated in this section) patent license to make, have made, use, offer to sell, sell, import, and otherwise transfer the Work, where such license applies only to those patent claims licensable by such Contributor that are necessarily infringed by their Contribution(s) alone or by combination of their Contribution(s) with the Work to which such Contribution(s) was submitted. If You institute patent litigation against any entity (including a cross-claim or counterclaim in a lawsuit) alleging that the Work or a Contribution incorporated within the Work constitutes direct or contributory patent infringement, then any patent licenses granted to You under this License for that Work shall terminate as of the date such litigation is filed.

4. Redistribution. You may reproduce and distribute copies of the Work or Derivative Works thereof in any medium, with or without modifications, and in Source or Object form, provided that You meet the following conditions:

1. You must give any other recipients of the Work or Derivative Works a copy of this License; and
2. You must cause any modified files to carry prominent notices stating that You changed the files; and
3. You must retain, in the Source form of any Derivative Works that You distribute, all copyright, patent, trademark, and attribution notices from the Source form of the Work, excluding those notices that do not pertain to any part of the Derivative Works; and
4. If the Work includes a "**NOTICE**" text file as part of its distribution, then any Derivative Works that You distribute must include a readable copy of the attribution notices contained within such NOTICE file, excluding those notices that do not pertain to any part of the Derivative Works, in at least one of the following places: within a NOTICE text file distributed as part of the Derivative Works; within the Source form or documentation, if provided along with the Derivative Works; or, within a display generated by the Derivative Works, if and wherever such third-party notices normally appear. The contents of the NOTICE file are for informational purposes only and do not modify the License. You may add Your own attribution notices within Derivative Works that You distribute, alongside or as an addendum to the NOTICE text from the Work, provided that such additional attribution notices cannot be construed as modifying the License.

   You may add Your own copyright statement to Your modifications and may provide additional or different license terms and conditions for use, reproduction, or distribution of Your modifications, or for any such Derivative Works as a whole, provided Your use, reproduction, and distribution of the Work otherwise complies with the conditions stated in this License.

5. Submission of Contributions. Unless You explicitly state otherwise, any Contribution intentionally submitted for inclusion in the Work by You to the Licensor shall be under the terms and conditions of this License, without any additional terms or conditions. Notwithstanding the above, nothing herein shall supersede or modify the terms of any separate license agreement you may have executed with Licensor regarding such Contributions.

6. Trademarks. This License does not grant permission to use the trade names, trademarks, service marks, or product names of the Licensor, except as required for reasonable and customary use in describing the origin of the Work and reproducing the content of the NOTICE file.

7. Disclaimer of Warranty. Unless required by applicable law or agreed to in writing, Licensor provides the Work (and each Contributor provides its Contributions) on an "AS IS" BASIS, WITHOUT WARRANTIES OR CONDITIONS OF ANY KIND, either express or implied, including, without limitation, any warranties or conditions of TITLE, NON-INFRINGEMENT, MERCHANTABILITY, or FITNESS FOR A PARTICULAR PURPOSE. You are solely responsible for determining the appropriateness of using or redistributing the Work and assume any risks associated with Your exercise of permissions under this License.

8. Limitation of Liability. In no event and under no legal theory, whether in tort (including negligence), contract, or otherwise, unless required by applicable law (such as deliberate and grossly negligent acts) or agreed to in writing, shall any Contributor be liable to You for damages, including any direct, indirect, special, incidental, or consequential damages of any character arising as a result of this License or out of the use or inability to use the Work (including but not limited to damages for loss of goodwill, work stoppage, computer failure or malfunction, or any and all other commercial damages or losses), even if such Contributor has been advised of the possibility of such damages.

9. Accepting Warranty or Additional Liability. While redistributing the Work or Derivative Works thereof, You may choose to offer, and charge a fee for, acceptance of support, warranty, indemnity, or other liability obligations and/or rights consistent with this License. However, in accepting such obligations, You may act only on Your own behalf and on Your sole responsibility, not on behalf of any other Contributor, and only if You agree to indemnify, defend, and hold each Contributor harmless for any liability incurred by, or claims asserted against, such Contributor by reason of your accepting any such warranty or additional liability.

END OF TERMS AND CONDITIONS

HOW TO APPLY THE APACHE LICENSE TO YOUR WORK

Include a copy of the Apache License, typically in a file called LICENSE, in your work, and consider also including a NOTICE file that references the License.

To apply the Apache License to specific files in your work, attach the following boilerplate declaration, replacing the fields enclosed by brackets “[]” with your own identifying information. (Don’t include the brackets!) Enclose the text in the appropriate comment syntax for the file format. We also recommend that you include a file or class name and description of purpose on the same “printed page” as the copyright notice for easier identification within third-party archives.

Copyright [yyyy] [name of copyright owner]

Licensed under the Apache License, Version 2.0 (the “License”); you may not use this file except in compliance with the License. You may obtain a copy of the License at

http://www.apache.org/licenses/LICENSE-2.0

Unless required by applicable law or agreed to in writing, software distributed under the License is distributed on an “AS IS” BASIS, WITHOUT WARRANTIES OR CONDITIONS OF ANY KIND, either express or implied.

See the License for the specific language governing permissions and limitations under the License.

SIL OPEN FONT LICENSE, Version 1.1 - 26 February 2007

PREAMBLE

The goals of the Open Font License (OFL) are to stimulate worldwide development of collaborative font projects, to support the font creation efforts of academic and linguistic communities, and to provide a free and open framework in which fonts may be shared and improved in partnership with others.

The OFL allows the licensed fonts to be used, studied, modified and redistributed freely as long as they are not sold by themselves. The fonts, including any derivative works, can be bundled, embedded, redistributed and/or sold with any software provided that any reserved names are not used by derivative works. The fonts and derivatives, however, cannot be released under any other type of license. The requirement for fonts to remain under this license does not apply to any document created using the fonts or their derivatives.

DEFINITIONS

“Font Software” refers to the set of files released by the Copyright Holder(s) under this license and clearly marked as such. This may include source files, build scripts and documentation.

“Reserved Font Name” refers to any names specified as such after the copyright statement(s).

“Original Version” refers to the collection of Font Software components as distributed by the Copyright Holder(s).

“Modified Version” refers to any derivative made by adding to, deleting, or substituting — in part or in whole — any of the components of the Original Version, by changing formats or by porting the Font Software to a new environment.

“Author” refers to any designer, engineer, programmer, technical writer or other person who contributed to the Font Software.

PERMISSION & CONDITIONS

Permission is hereby granted, free of charge, to any person obtaining a copy of the Font Software, to use, study, copy, merge, embed, modify, redistribute, and sell modified and unmodified copies of the Font Software, subject to the following conditions:

1. Neither the Font Software nor any of its individual components, in Original or Modified Versions, may be sold by itself.
2. Original or Modified Versions of the Font Software may be bundled, redistributed and/or sold with any software, provided that each copy contains the above copyright notice and this license. These can be included either as stand-alone text files, human-readable headers or in the appropriate machine-readable metadata fields within text or binary files as long as those fields can be easily viewed by the user.
3. No Modified Version of the Font Software may use the Reserved Font Name(s) unless explicit written permission is granted by the corresponding Copyright Holder. This restriction only applies to the primary font name as presented to the users.
4. The name(s) of the Copyright Holder(s) or the Author(s) of the Font Software shall not be used to promote, endorse or advertise any Modified Version, except to acknowledge the contribution(s) of the Copyright Holder(s) and the Author(s) or with their explicit written permission.
5. The Font Software, modified or unmodified, in part or in whole, must be distributed entirely under this license, and must not be distributed under any other license. The requirement for fonts to remain under this license does not apply to any document created using the Font Software.

TERMINATION

This license becomes null and void if any of the above conditions are not met.

DISCLAIMER

THE FONT SOFTWARE IS PROVIDED “AS IS”, WITHOUT WARRANTY OF ANY KIND, EXPRESS OR IMPLIED, INCLUDING BUT NOT LIMITED TO ANY WARRANTIES OF MERCHANTABILITY, FITNESS FOR A PARTICULAR PURPOSE AND NONINFRINGEMENT OF COPYRIGHT, PATENT, TRADEMARK, OR OTHER RIGHT. IN NO EVENT SHALL THE COPYRIGHT HOLDER BE LIABLE FOR ANY CLAIM, DAMAGES OR OTHER LIABILITY, INCLUDING ANY GENERAL, SPECIAL, INDIRECT, INCIDENTAL, OR CONSEQUENTIAL DAMAGES, WHETHER IN AN ACTION OF CONTRACT, TORT OR OTHERWISE, ARISING FROM, OUT OF THE USE OR INABILITY TO USE THE FONT SOFTWARE OR FROM OTHER DEALINGS IN THE FONT SOFTWARE.

SAFETY

	The lightning flash with arrow head within an equilateral triangle is intended to alert the user to the presence of uninsulated "dangerous voltage" within the product's enclosure that may be of sufficient magnitude to constitute a risk of electric shock to persons.
	The exclamation point within an equilateral triangle is intended to alert the user to the presence of important operating and maintenance (servicing) instructions in the literature accompanying the appliance.

Please follow all warnings, precautions and maintenance as recommended in this user's guide.

To avoid electric shock, the unit and its peripherals must be properly grounded (earthed).

Important Safety Instruction

- Do not block any ventilation openings. To ensure reliable operation of the projector and to protect from over heating, it is recommended to install the projector in a location that does not block ventilation. As an example, do not place the projector on a crowded coffee table, sofa, bed, etc. Do not put the projector in an enclosure such as a book case or a cabinet that restricts air flow.
- To reduce the risk of fire and/or electric shock, do not expose the projector to rain or moisture. Do not install near heat sources such as radiators, heaters, stoves or any other apparatus such as amplifiers that emits heat.
- Do not let objects or liquids enter the projector. They may touch dangerous voltage points and short out parts that could result in fire or electric shock.
- Do not use under the following conditions:
  - In extremely hot, cold or humid environments.
    - (i) Ensure that the ambient room temperature is within 0°C ~ 40°C
    - (ii) Relative humidity is 10% ~ 80%
  - In areas susceptible to excessive dust and dirt.
  - Near any appliance generating a strong magnetic field.
  - In direct sunlight.
- Do not use the unit if it has been physically damaged or abused. Physical damage/abuse would be (but not limited to):
  - Unit has been dropped.
  - Power supply cord or plug has been damaged.
  - Liquid has been spilled on to the projector.
  - Projector has been exposed to rain or moisture.
  - Something has fallen in the projector or something is loose inside.
- Do not place the projector on an unstable surface. The projector may fall over resulting in injury or the projector may become damaged.
- Do not block the light coming out of the projector lens when in operation. The light will heat the object and could melt, cause burns or start a fire.

- Please do not open or disassemble the projector as this may cause electric shock.
- Do not attempt to service the unit yourself. Opening or removing covers may expose you to dangerous voltages or other hazards. Please call Optoma before you send the unit for repair.
- See projector enclosure for safety related markings.
- The unit should only be repaired by appropriate service personnel.
- Only use attachments/accessories specified by the manufacturer.
- Do not look into straight into the projector lens during operation. The bright light may harm your eyes.
- Turn off and unplug the power plug from the AC outlet before cleaning the product.
- Use a soft dry cloth with mild detergent to clean the display housing. Do not use abrasive cleaners, waxes or solvents to clean the unit.
- Disconnect the power plug from AC outlet if the product is not being used for a long period of time.
- Do not setup the projector in places where it might be subjected to vibration or shock.
- Do not touch the lens with bare hands.
- **! WARNING** CHEMICAL BURN HAZARD

  This product contains a small button battery. If swallowed, this battery can cause severe internal burns [within 2 hours] and can lead to death.

  Keep new and used batteries away from children. If battery compartment will not close securely, stop using product and keep it away from children.

  If you think batteries might have been swallowed or placed inside any part of the body, seek immediate medical attention.

- Remove battery/batteries from remote control before storage. If the battery/batteries are left in the remote for long periods, they may leak.
- Do not use or store the projector in places where smoke from oil or cigarettes may be present, as it can adversely affect the quality of the projector performance.
- Use a power strip and or surge protector. As power outages and brown-outs can KILL devices.

Safety Information

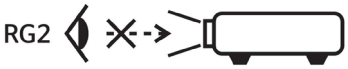

- As with any bright source, do not stare into the direct beam, RG2 IEC 62471-5:2015.
- Product label(Rating label) on the bottom of the product.

Cleaning the Lens

- Before cleaning the lens, be sure to turn off the projector and unplug the power cord to allow it to completely cool down.
- Use a compressed air tank to remove the dust.
- Use a special cloth for cleaning lens and gently wipe the lens. Do not touch the lens with your fingers.
- Do not use alkaline/acid detergents or volatile solvents such as alcohol for cleaning lens. If the lens is damaged due to the cleaning process, it is not covered by the warranty.

Warning: Do not use a spray containing flammable gases to remove dust or dirt from the lens. This may cause a fire due to excessive heat inside the projector.

Warning: Do not clean the lens if the projector is warming up as this may cause the lens' surface film to peel off.

Warning: Do not wipe or tap the lens with a hard object.

Copyright

This publication, including all photographs, illustrations and software, is protected under international copyright laws, with all rights reserved. Neither this manual, nor any of the material contained herein, may be reproduced without written consent of the author.

© Copyright 2024

Disclaimer

The information in this document is subject to change without notice. The manufacturer makes no representations or warranties with respect to the contents hereof and specifically disclaims any implied warranties of merchantability or fitness for any particular purpose. The manufacturer reserves the right to revise this publication and to make changes from time to time in the content hereof without obligation of the manufacturer to notify any person of such revision or changes.

Trademark Recognition

Kensington is a U.S. registered trademark of ACCO Brand Corporation with issued registrations and pending applications in other countries throughout the world.

HDMI, the HDMI Logo, and High-Definition Multimedia Interface are trademarks or registered trademarks of HDMI Licensing LLC in the United States and other countries.

DLP®, DLP Link and the DLP logo are registered trademarks of Texas Instruments and BrilliantColor™ is a trademark of Texas Instruments.

All other product names used in this manual are the properties of their respective owners and are Acknowledged.

FCC

This device has been tested and found to comply with the limits for a Class B digital device pursuant to Part 15 of the FCC rules. These limits are designed to provide reasonable protection against harmful interference in a residential installation. This device generates, uses and can radiate radio frequency energy and, if not installed and used in accordance with the instructions, may cause harmful interference to radio communications.

However, there is no guarantee that interference will not occur in a particular installation. If this device does cause harmful interference to radio or television reception, which can be determined by turning the device off and on is encouraged to try to correct the interference by one or more of the following measures:

- Reorient or relocate the receiving antenna.
- Increase the separation between the device and receiver.
- Connect the device into an outlet on a circuit different from that to which the receiver is connected.
- Consult the dealer or an experienced radio/television technician for help.

Notice: Shielded cables

All connections to other computing devices must be made using shielded cables to maintain compliance with FCC regulations.

Caution

Changes or modifications not expressly approved by the manufacturer could void the user’s authority, which is granted by the Federal Communications Commission, to operate this projector.

Operation Conditions

This device complies with Part 15 of the FCC Rules. Operation is subject to the following two conditions:

1. This device may not cause harmful interference and

2. This device must accept any interference received, including interference that may cause undesired operation.

Notice: Canadian users

This Class B digital apparatus complies with Canadian ICES-003.

Remarque à l’intention des utilisateurs canadiens

Cet appareil numerique de la classe B est conforme a la norme NMB-003 du Canada.

Declaration of Conformity for EU countries

- EMC Directive 2014/30/EC (including amendments)
- Low Voltage Directive 2014/35/EC
- RED 2014/53/EU (if product has RF function)

WEEE

Disposal instructions

Do not throw this electronic device into the trash when discarding. To minimize pollution and ensure utmost protection of the global environment, please recycle it.

INTRODUCTION

Thank you for purchasing an Optoma laser projector. For full list of features please visit the product page on our website, where you will also find additional information and documentation such as FAQs.

Package overview

Carefully unpack and verify that you have the items listed below under standard accessories. Some of the items under optional accessories may not be available depending on the model, specification and your region of purchase. Please check with your place of purchase. Some accessories may vary from region to region.

The warranty card is only supplied in some specific regions. Please consult your dealer for detailed information.

Standard accessories

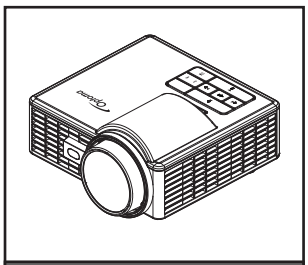

Projector

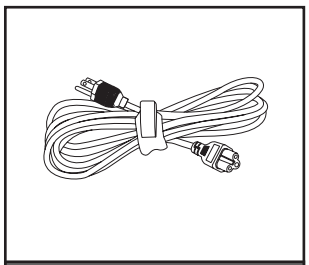

Power cable

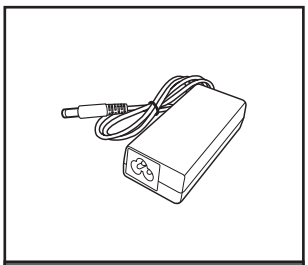

Power adapter

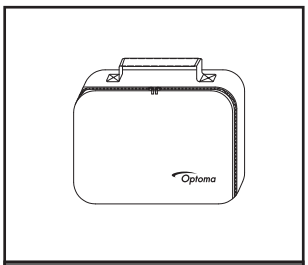

CArrying case

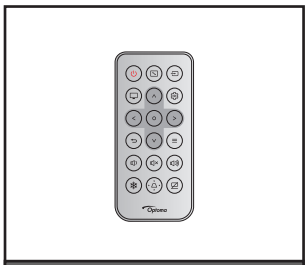

Remote control

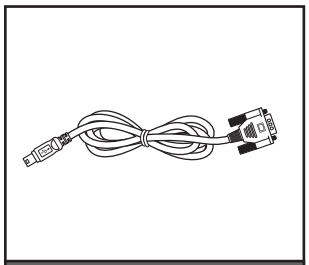

Mini USB-B to RS232 cable (10cm)

☑ Quick start user manual

Documentation

Note:

- *For access to the setup information, user manual, warranty information, and product updates – please scan the QR Code or visit the following URL: https://www.optoma.com/support/download*
- *Power cable and optional accessories may vary by country.*

Optional accessories

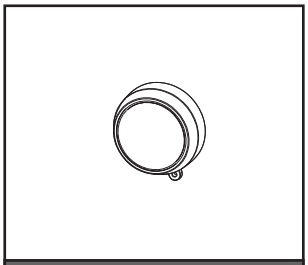

Lens cap

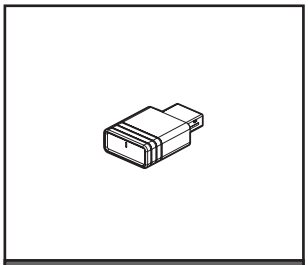

Wi-Fi dongle (EZC-5201BS)

Note: *The optional accessories may vary depending on the region and the purchased projector model.*

INTRODUCTION

Product overview

ML1050STi model

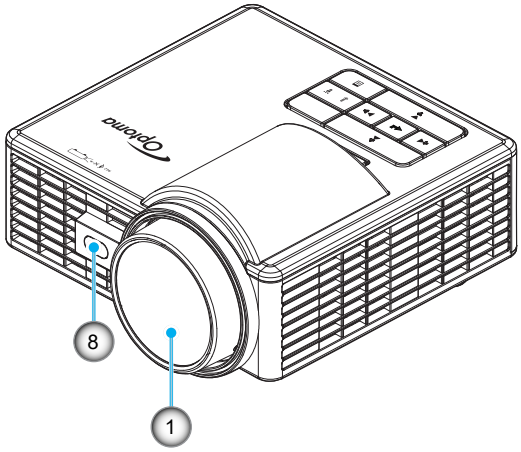

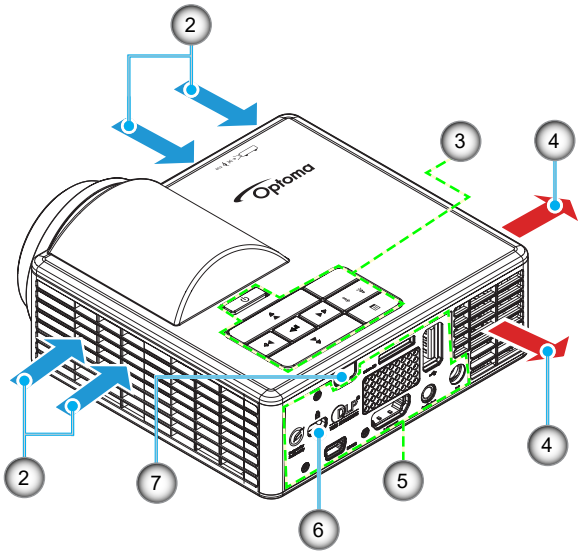

ML750i model

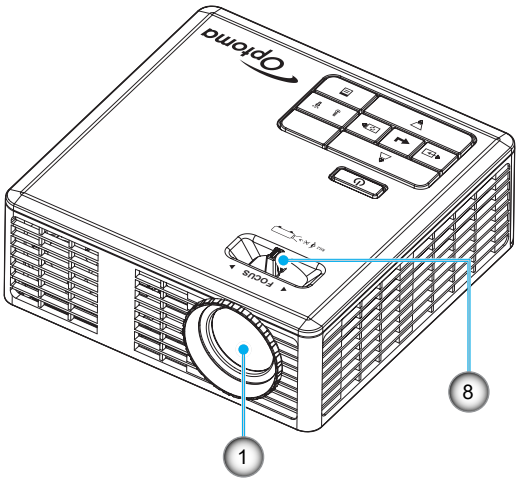

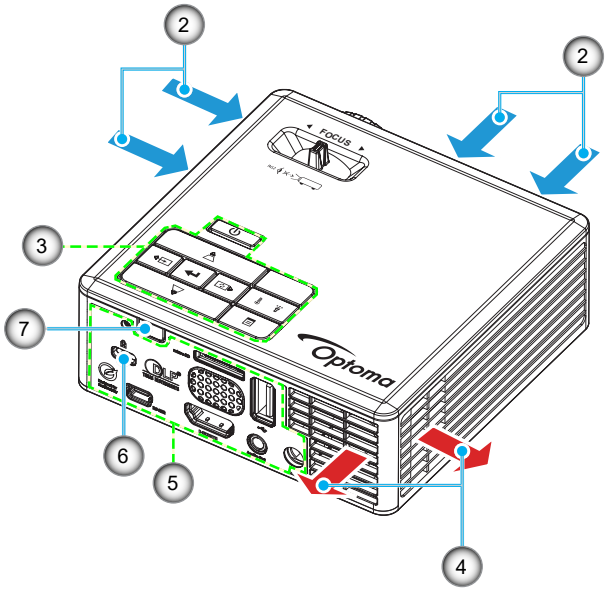

INTRODUCTION

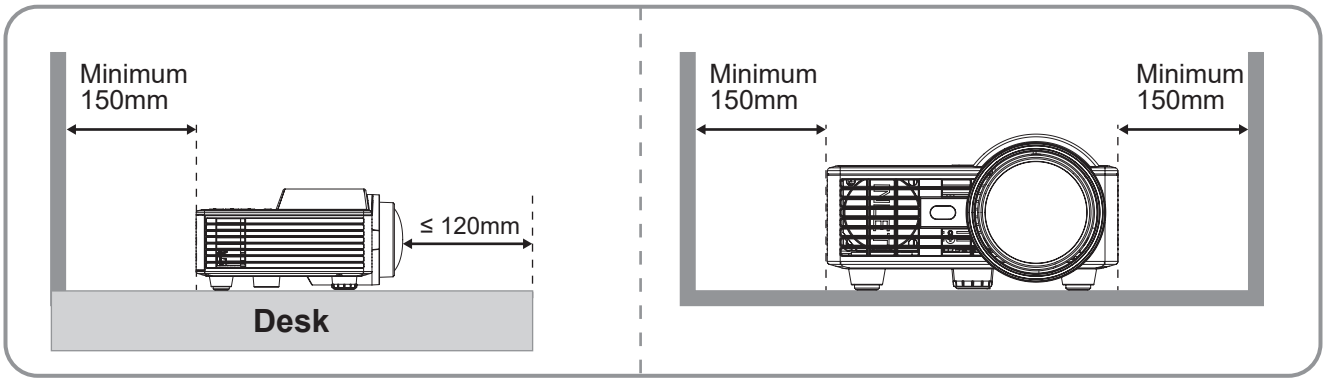

Note:

- *Do not block projector intake and exhaust vents.*
- *When operating the projector in an enclosed space, allow at least 15 cm clearance around the intake and exhaust vents.*
- *Ensure the distance between projector and the edge of table is less then 120mm to avoid light sensor detection interference. (For ML1050STi only.)*

No	Item	No	Item
1.	Lens	5.	Input / Output
2.	Ventilation (inlet)	6.	Kensington™ Lock Port
3.	Keypad	7.	IR Receiver
4.	Ventilation (outlet)	8.	Focus Sensor / Lever

INTRODUCTION

Connections

ML1050STi model

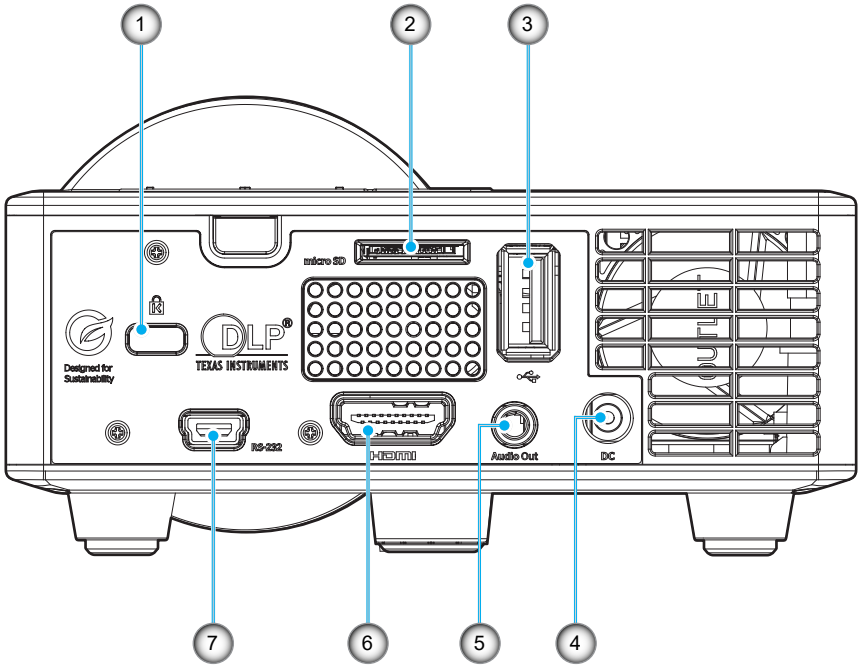

ML750i model

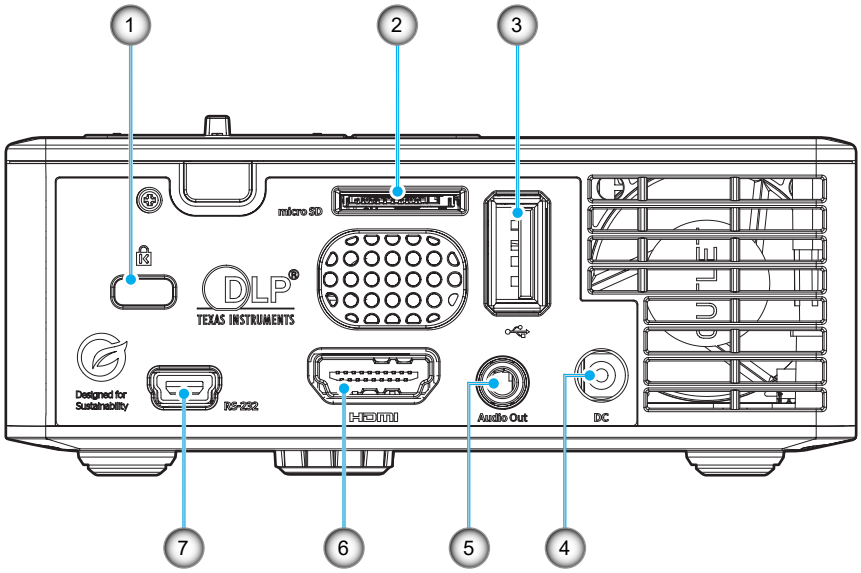

No	Item	No	Item
1.	Kensington™ Lock Port	5.	Audio Out Connector
2.	Micro SD Card Slot (Up to 32G)	6.	HDMI Connector
3.	USB Power Out (5V/0.5A) Connector	7.	Mini USB (RS232 control) Connector
4.	DC Jack		

Note:

- *Signal mode support varies from different model in each sales region.*

INTRODUCTION

- *Mini USB Connector (#7) is for RS232 function only.*
  a. To enable RS232 control, activate the hot key (Sequence accessible via RS232 quick guide)*
  ** To obtain the RS232 quick start guide, please contact your local Optoma Sales/Service team.*
  b. Use specified cable (Mini USB – to – D SUB 9) to connect to PC or laptop.
  c. Do not use other cables or devices with this connector, any incompatible power output may cause damage to the device or connector.
  d. For additional information regarding the RS232 connector, please contact your local reseller or service center.

INTRODUCTION

Keypad

ML1050STi model

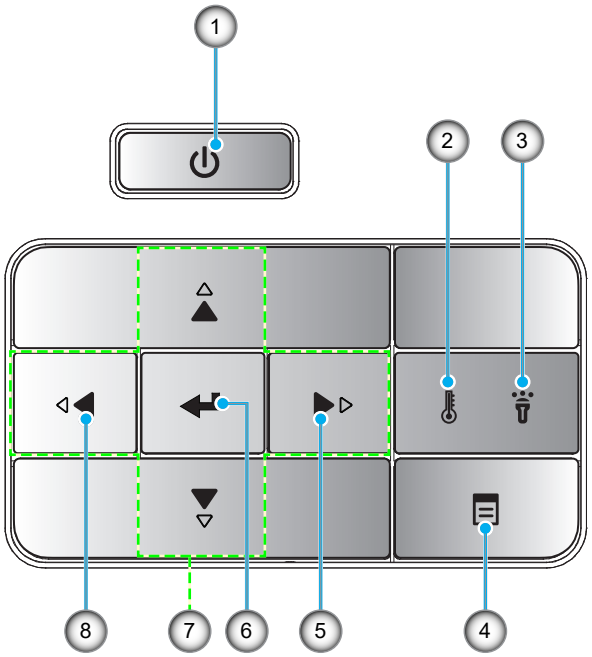

ML750i model

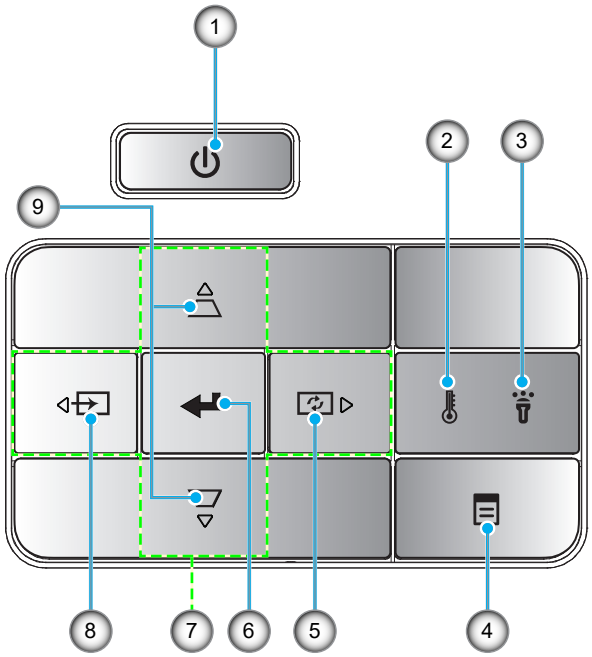

No	Item
1.	Power with its LED
2.	Temp LED
3.	Lamp LED
4.	Menu
5.	Re-Sync (ML750i model only)

No	Item
6.	Enter
7.	Four Directional Select Keys
8.	Source (ML750i model only)
9.	Keystone Correction (ML750i model only)

Note:

- *Menu (#4): Multiple function depends on the input source.*
  **HDMI: Press to display or exit the on-screen display menus.*
  **Home (USB-A, SD card):*
  a. Press and hold (over 1 second): To activate the OSD.
  b. Press: Back to the previous page.

INTRODUCTION

Remote control

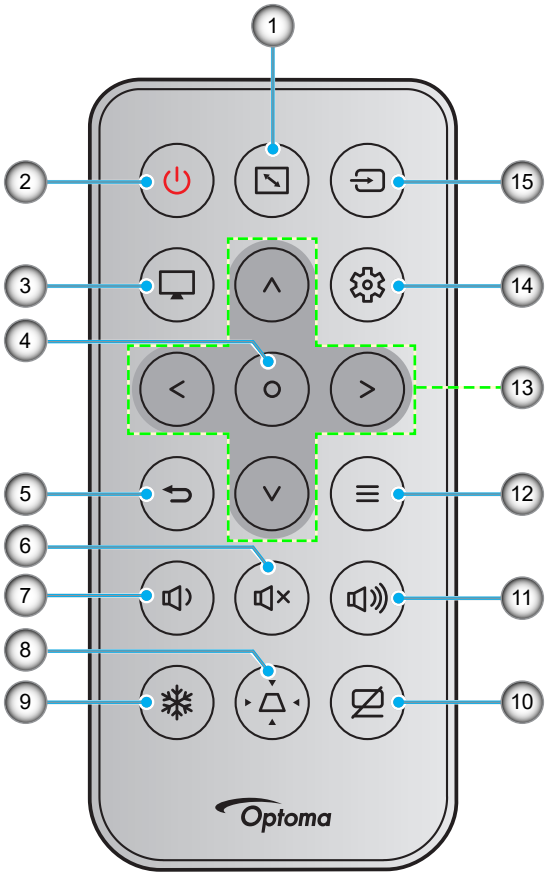

No	Item	No	Item
1.	Aspect Ratio	9.	Freeze
2.	Power On / Off	10.	AV Mute
3.	Mode / Home	11.	Volume +
4.	Enter	12.	Menu / Back
5.	Return	13.	Four Directional Select Keys
6.	Mute	14.	Settings / Setup Menu / Menu
7.	Volume -	15.	Source
8.	Keystone Correction		

Note:

- *Some keys may have no function for models that do not support these features. (Please refer to page 54).*
- *Before using the remote control for the first time, remove the transparent insulation tape. See page 25 for battery installation.*
- *The inclusion of the battery for the remote control may vary depending on the region.*

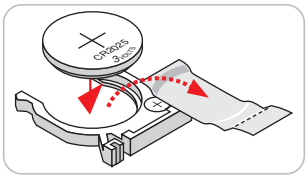

SETUP AND INSTALLATION

Installing the projector

Your projector is designed to be installed in several positions.

Your room layout or personal preference will dictate which installation location you select. Take into consideration the size and position of your screen, the location of a suitable power outlet, as well as the location and distance between the projector and the rest of your equipment.

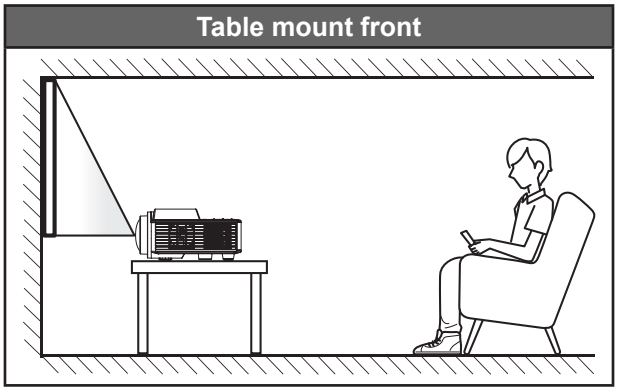

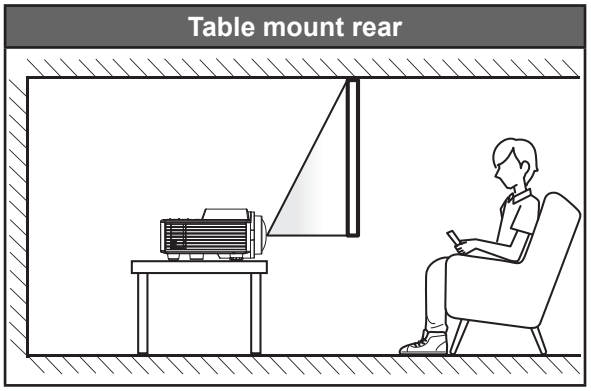

Projector should be placed flat on a surface and 90 degrees / perpendicular to the screen.

- How to determine projector location for a given screen size, please refer to distance table on pages *51~52*.
- How to determine screen size for a given distance, please refer to distance table on pages *51~52*.

Note: *The further away the projector is placed from the screen the projected image size increases and vertical offset also increases proportionally.*

SETUP AND INSTALLATION

Projector installation notice

- 360 projection*

  With 360° projection*, images can be displayed in any orientation, giving you the freedom and versatility to install this projector in the desired location.

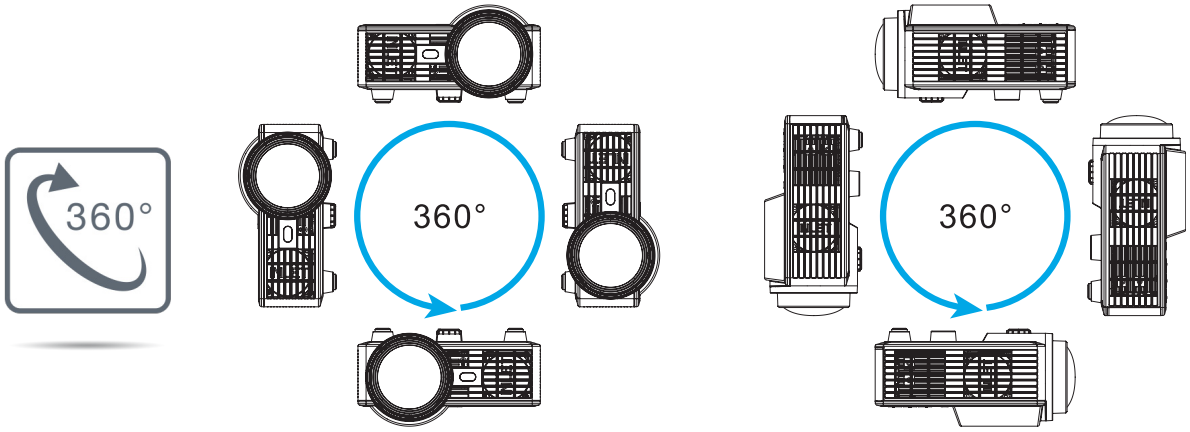

Portrait projection

- Ideal for digital signage applications; you can rotate your projector 90 degrees to project a portrait image.

SETUP AND INSTALLATION

Connecting sources to the projector

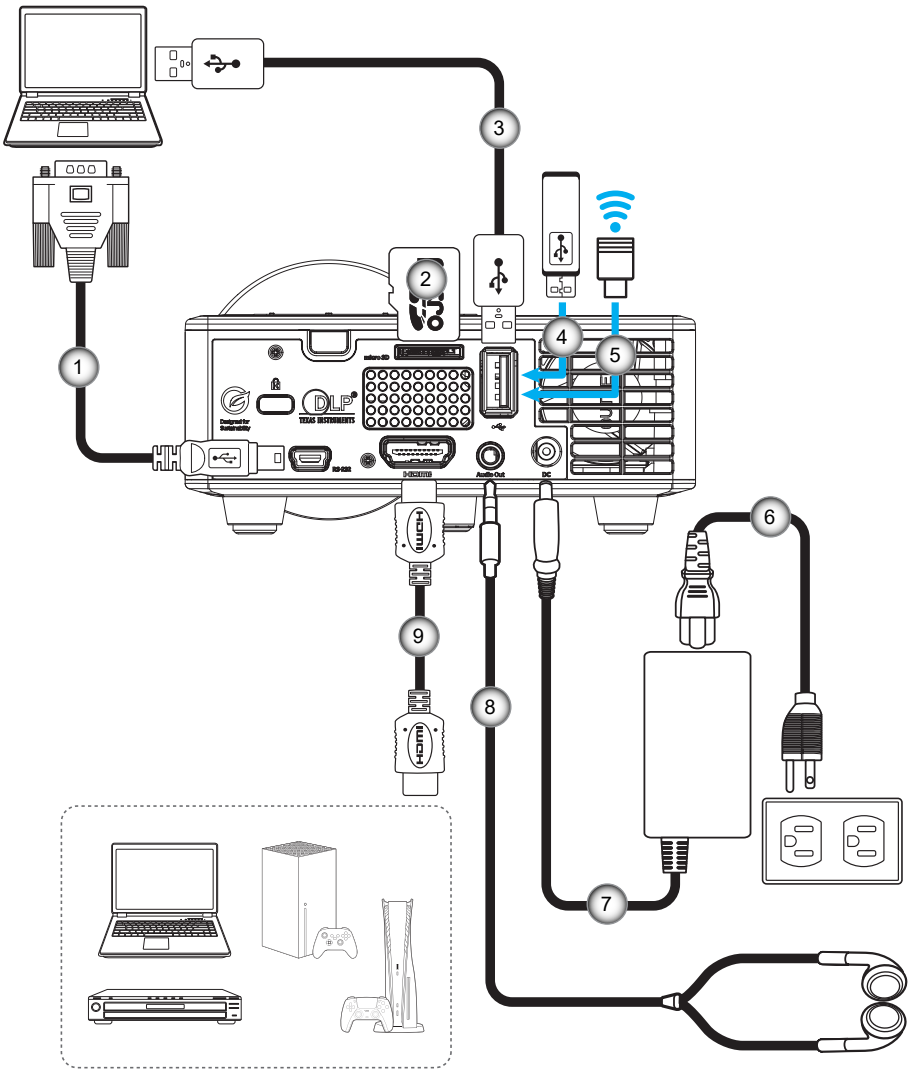

No	Item	No	Item
1.	Mini USB-B to RS232 Cable	6.	Power Cable
2.	Micro SD Card (Up to 32GB)	7.	Power Adapter
3.	USB Cable	8.	Audio Out Cable
4.	USB Disk Drive	9.	HDMI Cable
5.	Wi-Fi Dongle		

SETUP AND INSTALLATION

Adjusting the projector image

Raising the Projector Height

Raise the projector to the desired display angle, and use the front tilt adjustment wheel to fine-tune the display angle.

Lowering the Projector Height

Lower the projector, and use the front tilt adjustment wheel to fine-tune the display angle.

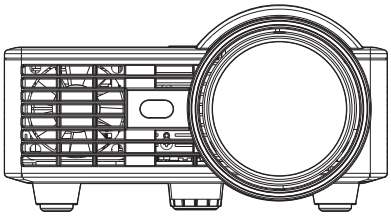

Front tilt adjustment wheel
(Angle of tilt: 0 to 3 degrees)

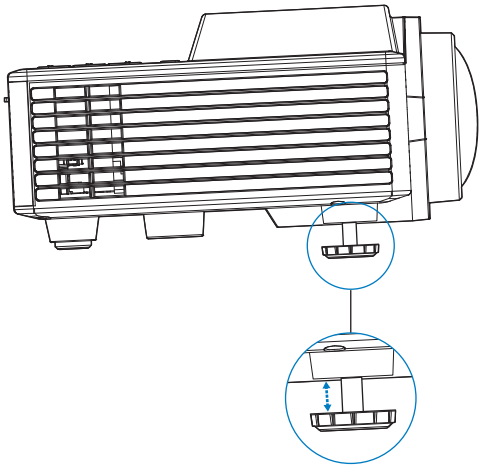

Important Note: *To avoid damaging the projector, ensure that the adjustment wheels are fully retracted before moving the projector or placing the projector in its carrying case.*

SETUP AND INSTALLATION

Adjusting the projector focus

ML1050STi model

Set the **Auto Focus** setting to **On** to allow the projector automatically adjust the image focus. See page *40*.

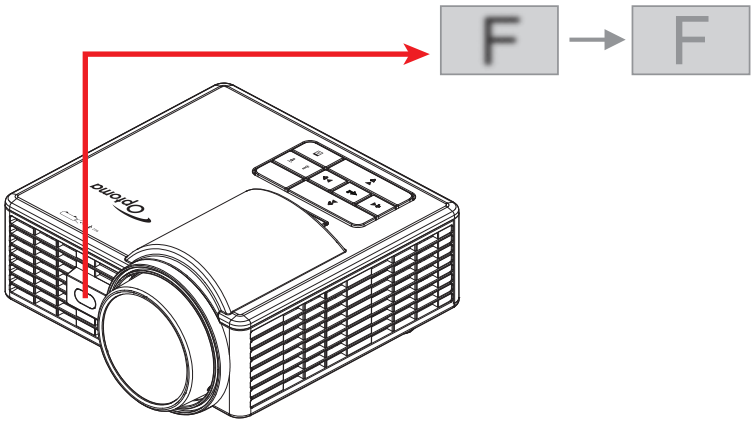

ML750i model

Rotate the focus lever until the image is clear.

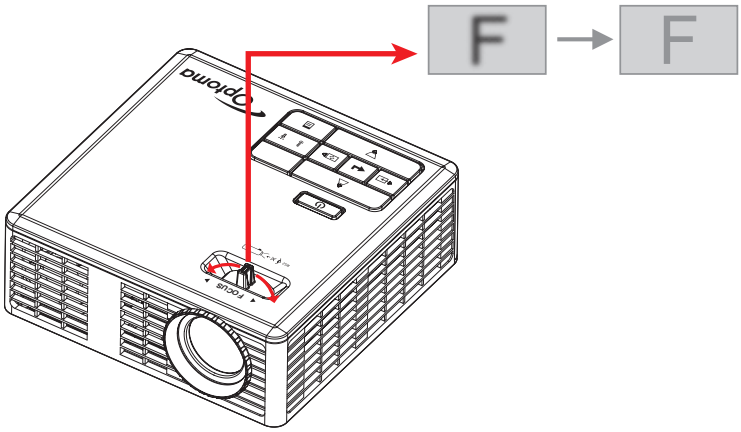

SETUP AND INSTALLATION

Remote setup

Installing / replacing the batteries

1. Press firmly and slide the battery cover off.

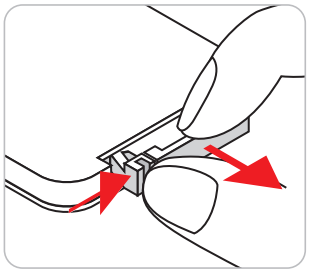

2. Install new battery into the compartment. Remove the old battery and install new one (CR2025). Ensure that the side with a “+” is facing up.

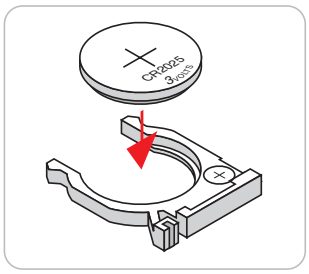

3. Put the cover back.

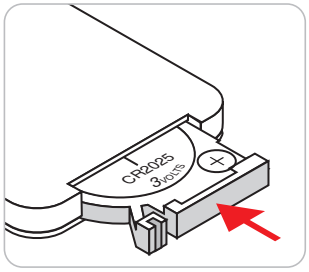

CAUTION: To ensure safe operation, please observe the following precautions:

- Use CR2025 type battery.
- Avoid contact with water or liquid.
- Do not expose the remote control to moisture or heat.
- Do not drop the remote control.
- If the battery has leaked in the remote control, carefully wipe the case clean and install new battery.
- Risk of an explosion if battery is replaced by an incorrect type.
- Dispose of used battery according to the instructions.

Note: *The inclusion of the battery for the remote control may vary depending on the region.*

SETUP AND INSTALLATION

Effective range

Infra-Red (IR) remote control sensor is located on the rear side of the projector. Ensure that the remote control is held at an angle ±30 degrees perpendicular to the projector's IR remote control sensor to ensure correct functionality. The distance between the remote control and the sensor should not be longer than 6 meters (19.7 feet).

- Make sure that there are no obstacles between the remote control and the IR sensor on the projector that might obstruct the infra-red beam.
- Make sure the IR transmitter of the remote control is not being shined on directly by sunlight or fluorescent lamps.
- Please keep the remote controller at least 2m away from fluorescent lamps or it may malfunction.
- If the remote control is close to Inverter-Type fluorescent lamps, it might become ineffective from time to time.
- If the remote control and the projector are within a very short distance of one another, the remote control might become ineffective.

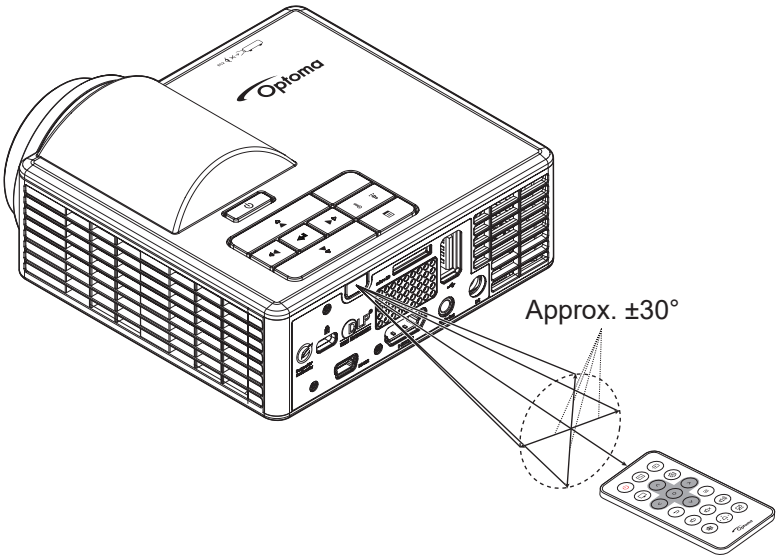

USING THE PROJECTOR

Powering on / off the projector

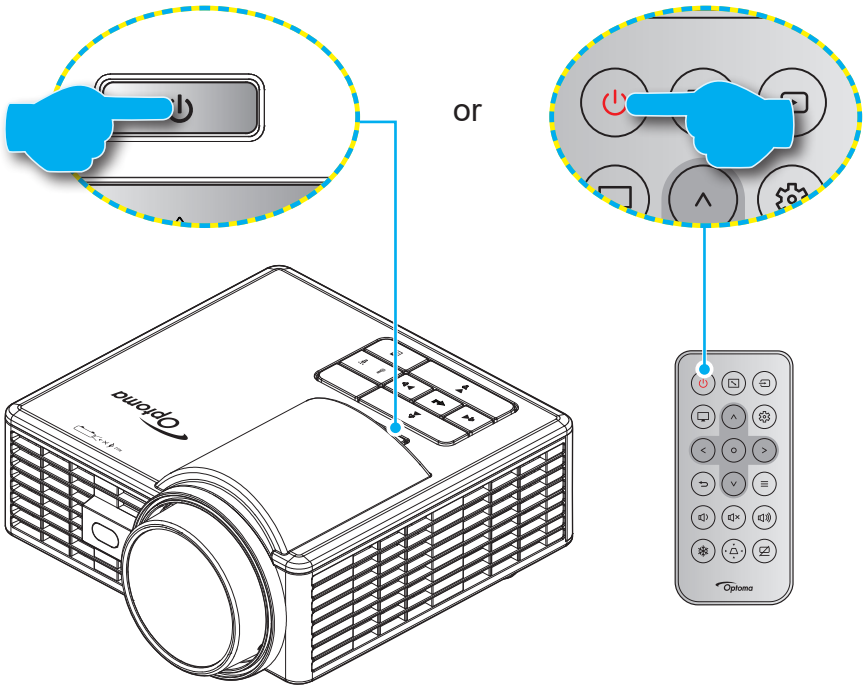

Powering on

1. Securely connect the power cord and signal/source cable. When connected, the Power LED will turn amber.
2. Turn on the projector by pressing the ⏻ button on the projector keypad or the ⏻ button on the remote control.
3. A start up screen will display in approximately 5 seconds and the Power LED will turn blue.

Note: *The first time the projector is turned on, you will be prompted to select the preferred language, projection orientation, and other settings.*

USING THE PROJECTOR

The first time the projector is turned on, you will be prompted to do the initial setup including selecting the projection orientation, preferred language, configuring network settings, and more. Once the ***Setup Complete!*** screen appears, it indicates the projector is ready to use.

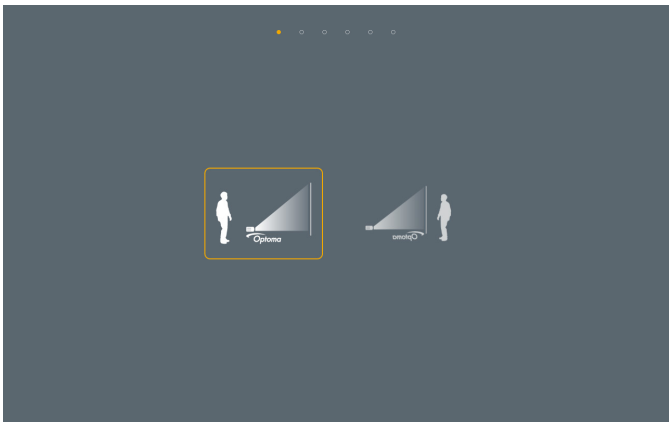

[Projection screen]

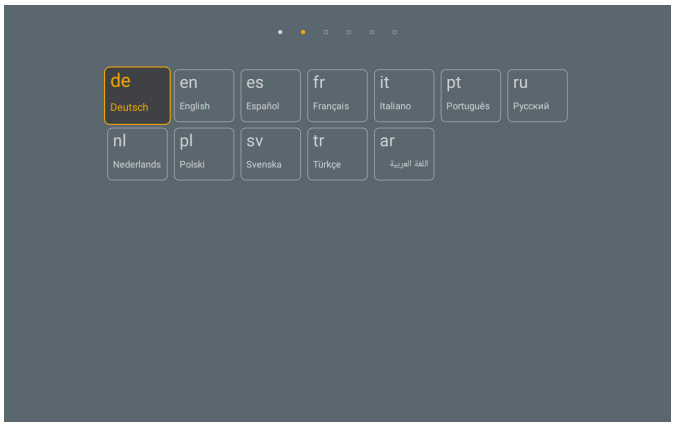

[Language screen]

[Wi-Fi dongle installation screen]

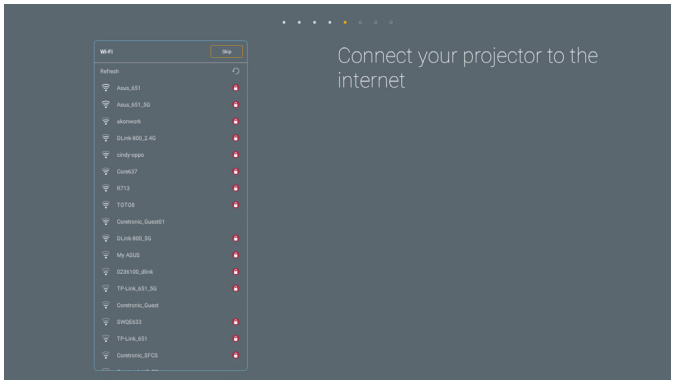

[Network screen]

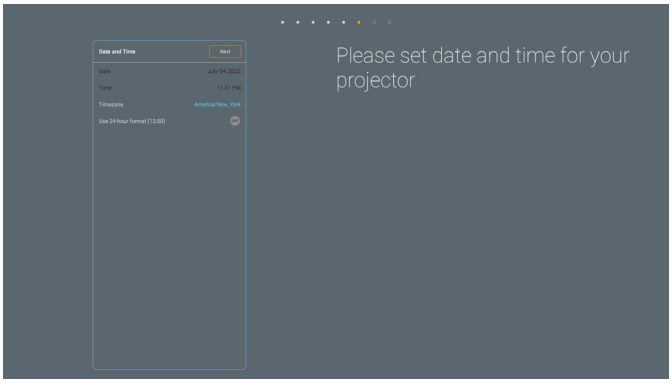

[Date and time screen]

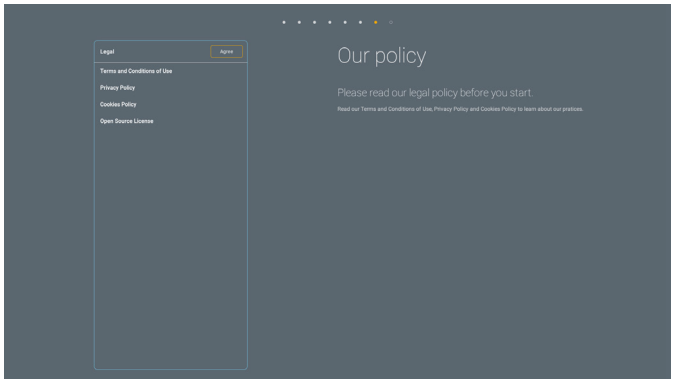

[Regulation screen]

USING THE PROJECTOR

Powering off

1. Turn off the projector by pressing the ⏻ button on the projector keypad or the ⏻ button on the remote control.
2. The following message will be displayed:

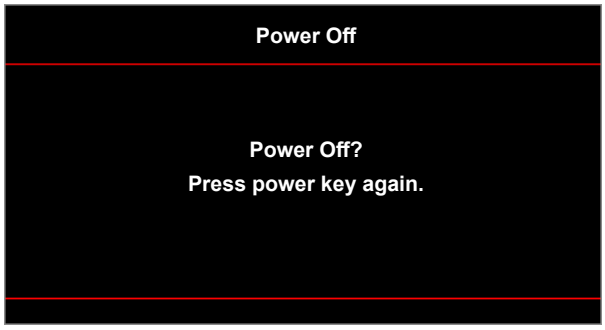

3. Press the ⏻/⏻ button again to confirm, otherwise the message will disappear after 15 seconds. When you press the ⏻/⏻ button for the second time, the projector will shut down.
4. When the Power LED turns solid amber, this indicates the projector has entered standby mode. When the projector is in standby mode, simply press the ⏻/⏻ button again to turn on the projector.
5. Disconnect the power cab;e from the electrical outlet and the projector.

Note: *It is not recommended that the projector is turned on immediately, right after a power off procedure.*

USING THE PROJECTOR

Selecting an input source

Turn on the connected source that you want to display on the screen, such as computer, notebook, video player, etc. The projector will automatically detect the source. If multiple sources are connected, press the button on the projector keypad (ML750i model only) or press the button on the remote control to select the desired input.

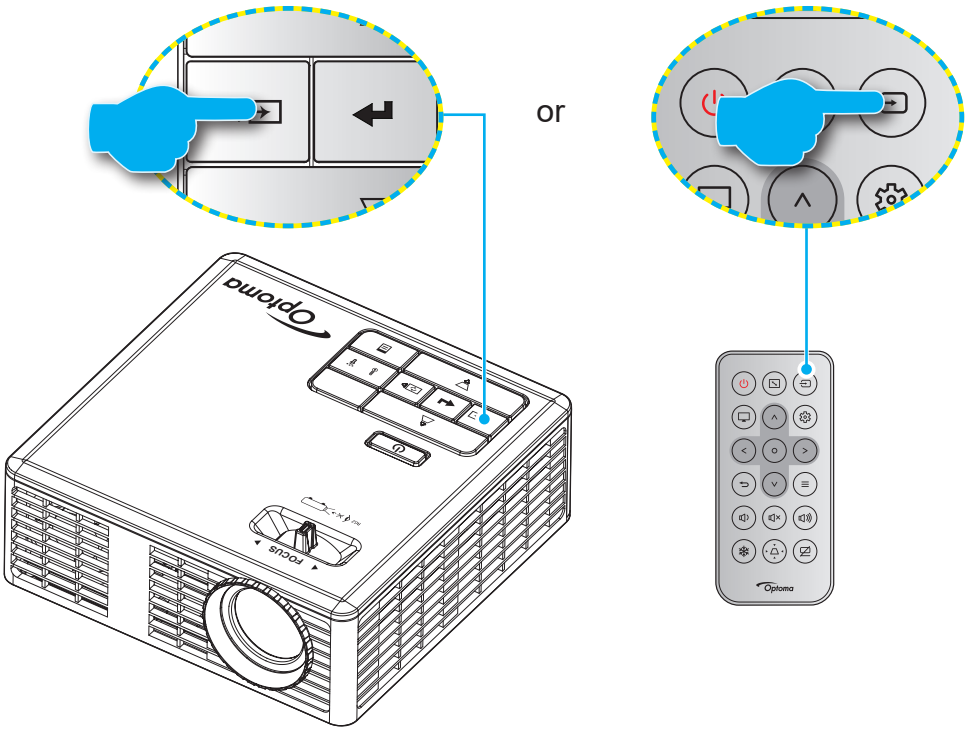

USING THE PROJECTOR

Home screen overview

The Home screen is displayed every time you start the projector. It contains system date and time, system status, icons to access OSD menu, projector settings menu, apps, input sources, and more.

To navigate the Home screen, simply use the buttons on the remote control.

You can return to the Home screen at any time by pressing the Mode key on the remote control when UI is at launcher or the input source is USB-A or SD card.

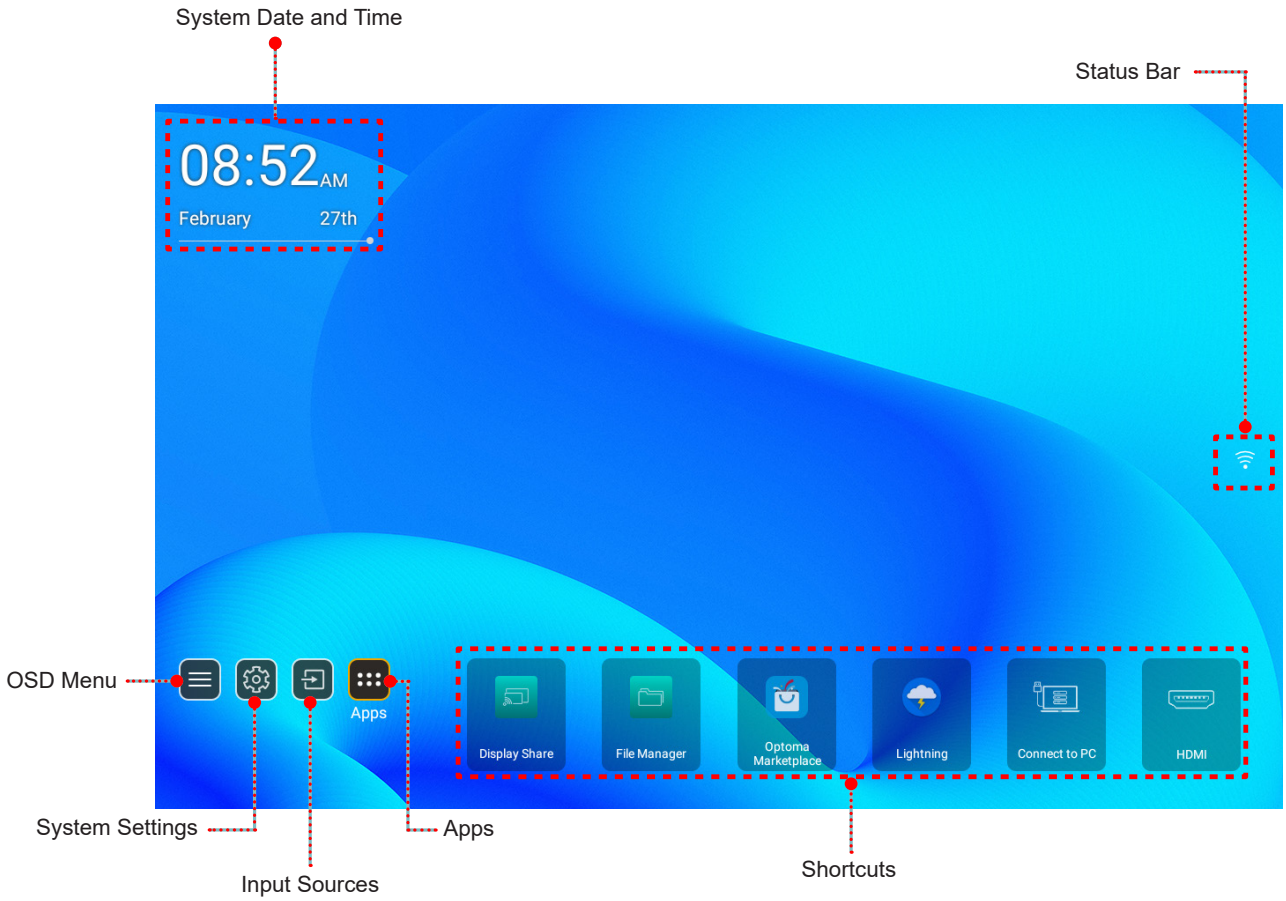

Note: *The selected menu or item is highlighted in orange color, for example "Apps" on the image above.*

System date and time

Date and time is displayed on the Home screen if the projector is connected to the network.The default setting is 10:00am, 2019/01/01. AM/PM will appear only if the 24-hour format is off.

To modify date and time parameters, select the respective field on the screen. The Date and Time settings page opens automatically. Then perform the modifications.

USING THE PROJECTOR

Projector settings menu (OSD)

The projector has multilingual on-screen display menus that allow you to make image adjustments and change a variety of settings. The projector will automatically detect the source.

General menu navigation

Operation	Using the Remote Control	Using the Projector Keypad
Open the OSD menu	Press the ≡ button	Press the ☰ button
Select an item	Press the ∧ / ∨ button	Press the ▲/▼ button
Enter the submenu	Press the ○ button	Press the ↵ button
Adjust the setting	Press the ∧ / ∨ / < / > button	Press the ▲/▼/◀/▶ button
Confirm the selection	Press the ○ button	Press the ↵ button
Move to the previous item	Press the ≡ button	Press the ☰ button
Close the OSD menu	Press the ≡ button	Press the ☰ button

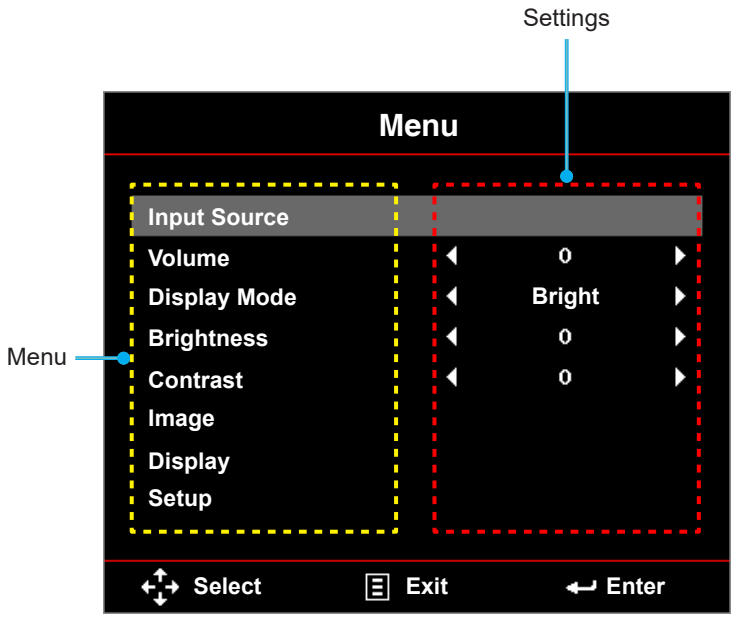

USING THE PROJECTOR

OSD Menu tree

Note: The OSD menu tree items and features are subject to models and region. Optoma reserve the right to add or remove items to improve product performance without notice.

Main Menu	Sub Menu	Sub Menu 2	Option
Input Source			HDMI
			Home
			USB-A
			SD Card
Volume			0~10
Display Mode			Bright
			PC
			Cinema
			Photo
			sRGB
			Eco.
Brightness			0~10
Contrast			0~10
Image	3D		On
			Off
	3D Sync. Invert		On
			Off
	Aspect Ratio		Auto
			4:3
			16:9
			16:10
	Zoom		50%
			75%
			100%
			125%
			150%
			175%
			200%
	Color Temperature		Warm
			Standard
			Cold
	Color Space		Auto
			RGB
			YUV

USING THE PROJECTOR

Main Menu	Sub Menu	Sub Menu 2	Option
Display	Auto Keystone		On
			Off
	Keystone		-40~+40
	Projection		Auto Keystone: On - Abc: No reverse - ɔdA: Left/ Right reverse Auto Keystone: Off - Abc: No reverse - ɔdA: Left/ Right reverse - ɔqA: Up/ Down reverse - Apc: Up/ Down and Left/ Right reverse
	Auto Focus (For ML1050STi only)		On
			Off
	Manual Focus (For ML1050STi only)		
Setup	Language		English
			German
			French
			Italian
			Spanish
			Portuguese
			Polish
			Dutch
			Russian
			Swedish
			Turkish
			Arabic
	Source	Auto Source	On
			Off
		Auto Source Switch	HDMI
			USB-A
			SD Card
		Boot-up Source	Auto
			HDMI
			Home
	Power On	Direct Power On	On
			Off
		Signal Power on	On
			Off
	Sleep Timer (hh:mm)		Auto (20 min)
			Off
			0:30
			1:00
			3:00
			8:00
			12:00

Main Menu	Sub Menu	Sub Menu 2	Option
Setup	Advanced	Saturation	0~20
		Hue	-10~10
	Reset		Yes
			No
	Info.	Regulatory	
		Serial Number	
		Light Source Hours	
		Device MAC address	
		Ver.	

USING THE PROJECTOR

Input Source menu

Select your projector’s input source. The options are: HDMI, Home, USB-A, and SD Card.

Volume menu

Adjust the volume.

Display Mode menu

Optimize the display image. The options are: Bright, PC, Cinema, Photo; sRGB, and Eco..

Brightness menu

Adjust the brightness of the image.

Contrast menu

Adjust the display contrast.

USING THE PROJECTOR

Image menu

The Image menu allows you to modify various image settings, such as 3D related, aspect ratio, zoom, color temperature, and color space.

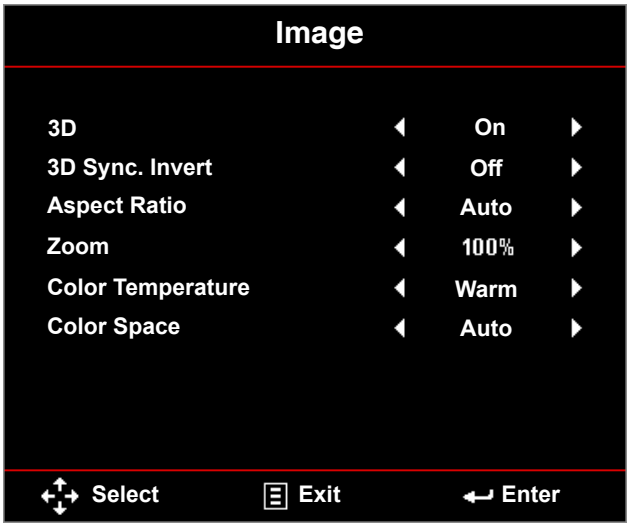

3D

Turn the 3D function on or off.

3D Sync. Invert

Turn the 3D sync. inverter option on or off.

Note:

- *3D/3D Sync. Invert cannot be changed when you select image settings.*
- *In 3D mode, the maximum supported input timing is 1024x768 @ 120Hz.*

Aspect Ratio

Select the format to adjust how the image appears. Options are:

- Auto: Maintain the aspect ratio of the image projector according to the input source.
- 4:3: The input source scales to fit the screen and projects a 4:3 image.
- 16:9: The input source scales to fit the screen and projects a 16:9 image.
- 16:10: The input source scales to fit the screen and projects a 16:10 image.

Scaling table:

Wide screen	480i/p	576i/p	1080i/p (16:9)	720p (16:9)
4x3	Scale to 1067x800.			
16x10	Scale to 1280x800.			
Auto	- If source is 4:3, the screen will be automatically resized to 1067x800. - If source is 16:9 and 16:10, the screen will be automatically resized to 1280x800.			

Zoom

Zoom in or zoom out the image. Options are: 50%, 75%, 100%, 125%, 150%, 175%, and 200%.

Color Temperature

Select the color temperature. Options are: Warm, Standard, and Cold.

Note: *The Color Temperature function is not supported in Bright, Eco., and 3D modes.*

Color Space

Select an appropriate color matrix type. Options are: Auto, RGB, and YUV.

Note: *The Color Space function is supported only in HDMI mode.*

USING THE PROJECTOR

Display menu

The Display menu allows you to modify the display settings, such as keystone, projection, auto focus, and manual focus.

Note: *The Auto Focus and Manual Focus function is for ML1050STi only.*

Auto Keystone

Select On to automatically adjust image distortion caused by tilting the projector.

Note: *The Auto Keystone function can be only used to adjust the image distortion vertically.*

Keystone

Adjust image distortion caused by tilting the projector (+/-40 degrees).

Note: *If you adjust the keystone degree manually then the Auto Keystone function will be automatically switched off.*

Projection

Select the projection mode, depending upon how the projector is mounted.

- If the **Auto Keystone** is set to **On**, you can choose one of the following options:
  - Abc No reverse
  - ɔdA Left/ Right reverse
- If the **Auto Keystone** is set to **Off**, you can choose one of the following options:
  - Abc No reverse
  - ɔdA Left/ Right reverse
  - ∀bc Up/ Down reverse
  - ∀pc Up/ Down and Left/ Right reverse

USING THE PROJECTOR

Auto Focus (For ML1050STi only)

Select **On** to automatically adjust the image focus.

Note:

- *If the projected image is unclear, please cover the sensor in front of the projector (less than 3cm) for one second and then release it. The projector adjustment will be reset to zero.*

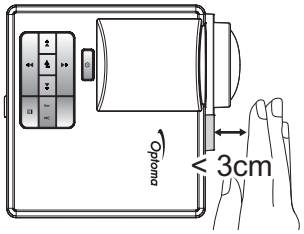

- *If the projected image is still unclear after performing the zero adjustment, please rotate the front tilt adjustment wheel to raise the projector to the desired display angle, and then reset the projector adjustment to zero.*

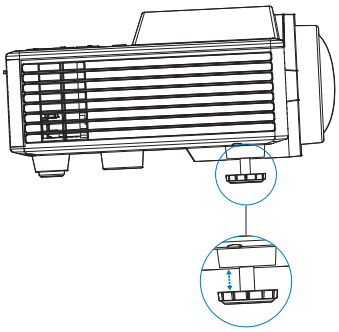

- *If the projected image is still unclear after performing above two steps, you have to adjust the image focus manually. To access the calibration screen for manual adjustment, do one of the following:*

  *a. Select **Manual Focus** from the OSD menu (**Display** > **Manual Focus**).*

  b. Press and hold the ◀ or ▶ button on the control panel/remote control.

- *Ensure the distance between projector and the edge of table is less then 120mm to avoid light sensor detection interference.*

Manual Focus (For ML1050STi only)

Adjust the image focus manually when Auto Focus option is Off.

Note: *When the calibration screen appears, long press the ◀ or ▶ button on the control panel/remote control to perform the coarse focus adjustment first, and then short press the ◀ or ▶ button to fine-tune your focus.*

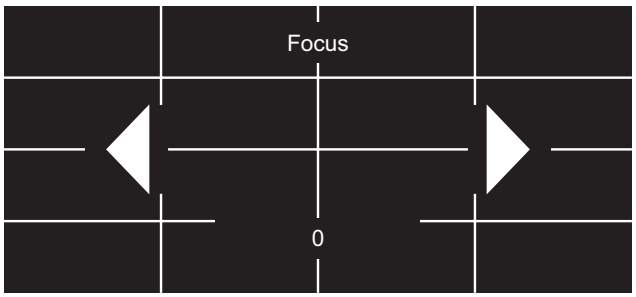

USING THE PROJECTOR

Setup menu

The Setup menu allows you to choose the default OSD language, configure the input source related settings, set sleep timer, and other options.

Language

Set the language for the OSD. Options are: English, German, French, Italian, Spanish, Portuguese, Polish, Dutch, Russian, Swedish, Turkish, and Arabic.

Source

Configure the input source related settings.

Auto Source

Choose this option to let the projector automatically find an available input source.

Auto Source Switch

When HDMI input signal is detected, the projector will automatically switch the input source. Auto Source Switch allows control over which input source is scanned. Example: If HDMI and USB-A are set to “On” and SD Card is set to “Off” - Auto Source will only scan HDMI and USB-A.

Note: *Source Switch allows control over which input source is scanned.*

Boot-up Source

Select the projector’s boot-up source. Options are: Auto, HDMI, and Home.

Note: *If the Boot-Up Source is set to “Auto”, each boot-up of the projector will use the previous source input.*

Power On

Configure the power on related settings.

Direct Power On

Choose **On** to activate Direct Power mode. The projector will automatically power on when AC power is supplied, without pressing the **Power** button on the projector control panel or on the remote control.

Signal Power on (For HDMI source only)

Choose **On** to activate Signal Power mode. The projector will automatically power on when a signal is detected, without pressing the **Power** button on the projector control panel or on the remote control.

Sleep Timer (hh:mm)

Set the countdown timer interval. The countdown timer will start, with or without a signal being sent to the projector. The projector will automatically power off when the countdown has finished. Options are: Auto, Off, 0:30, 1:00, 3:00, 8:00, 12:00.

Note: *If the Sleep Timer is set to “Auto”, then the projector will automatically power off after 20 minutes if no signal has been detected.*

Advanced

The Advanced menu allows you to change settings for Saturation and Hue.

Saturation

Adjust the saturation of the image.

Note: *Saturation can be only adjusted in HDMI mode with supported video timings 1080p/i, 720p, and 480p/i.*

Hue

Adjust the hue of the image.

Note: *Hue can be only adjusted in HDMI mode with supported video timings 1080p/i, 720p, and 480p/i.*

Reset

Reset all settings to its factory default, including HDMI and Home source (USB-A, SD card) settings. After choosing this option, a confirmation message appears on the screen. Select “Yes” to confirm or “No” to cancel reset.

Info.

View the projector information about its status and settings. The projector information is read only.

USING THE PROJECTOR

Control menu

On the Home screen, select the system settings menu “” to configure various system settings. Then select “” to enter the Control menu.

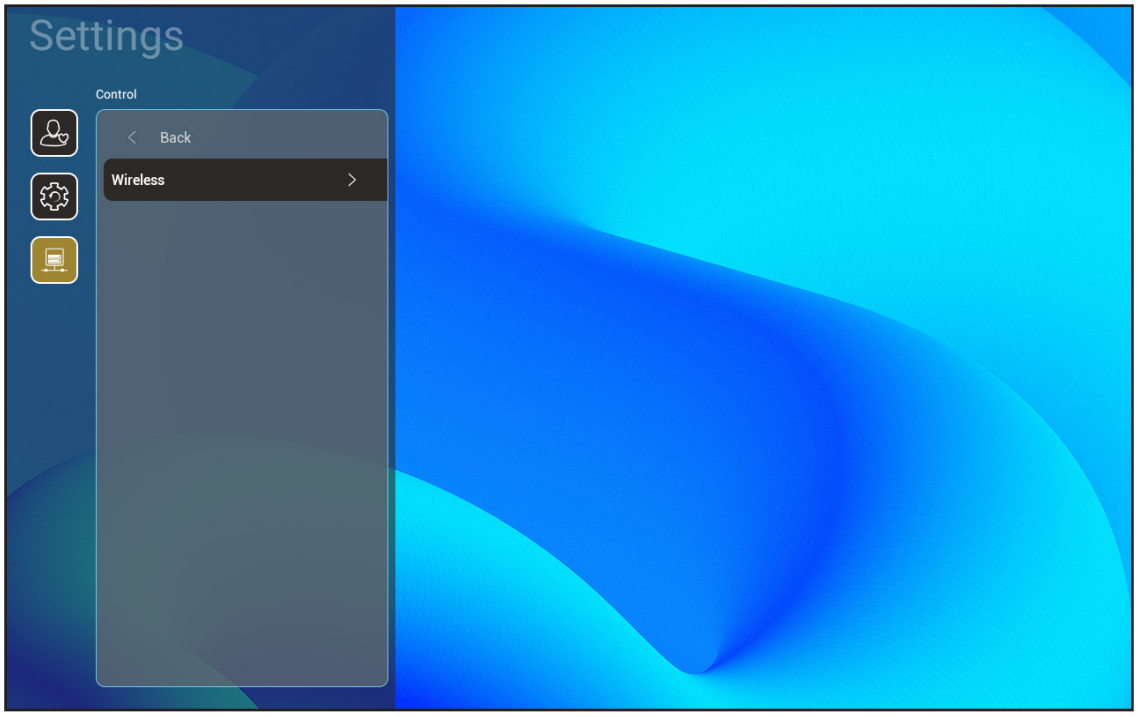

Wireless

Configure wireless network settings.

- **Wi-Fi:** Set the Wi-Fi option to “ON” to enable wireless network feature.
- **Available Network SSID:** Select your desired wireless access point and enter or configure the necessary connection parameters (if required), for example password, proxy settings, and IP address. For information, you can review the signal strength.

  Choose “Cancel” to return to the Network menu without saving settings. Choose “Forget” to delete the wireless network profile.

  Note: *Whenever you need to input symbols, the system will automatically pop-up an onscreen keyboard.*
- **Add New Network:** Manually enter the network name.
- **Portable Hotspot:** Configure the projector to behave as a wireless access point for other devices.

USING THE PROJECTOR

Selecting an input source

You can select any input source directly on the Home screen using an input shortcut.

Note: *You can personalize shortcut settings in "System Settings menu → Personalize → Home Shortcuts". You can also modify the shortcut order on the Home screen.*

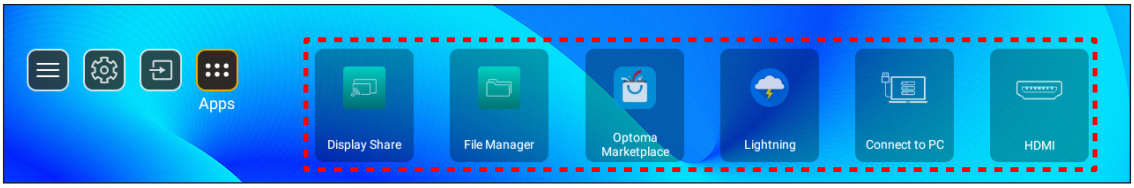

If the desired input source is not visible on the Home screen, select "" to view all input options. Then select your input source or select "Home" to return to the Home screen.

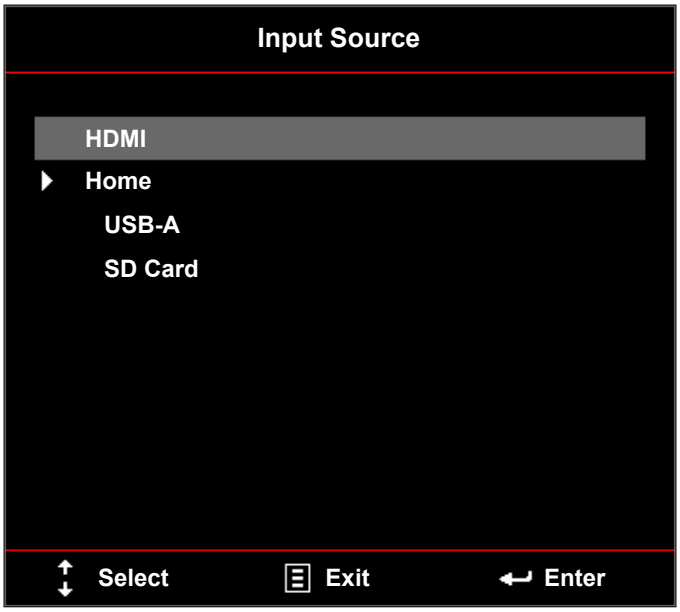

USING THE PROJECTOR

Selecting an app

You can select any app directly on the Home screen using an app shortcut.

Note: *You can personalize shortcut settings in "System Settings menu → Personalize → Home Shortcuts".*

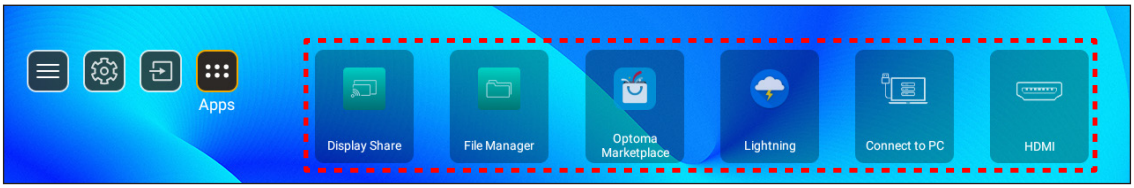

If the desired app is not visible on the Home screen, select "" to view all installed apps. Then select your desired app.

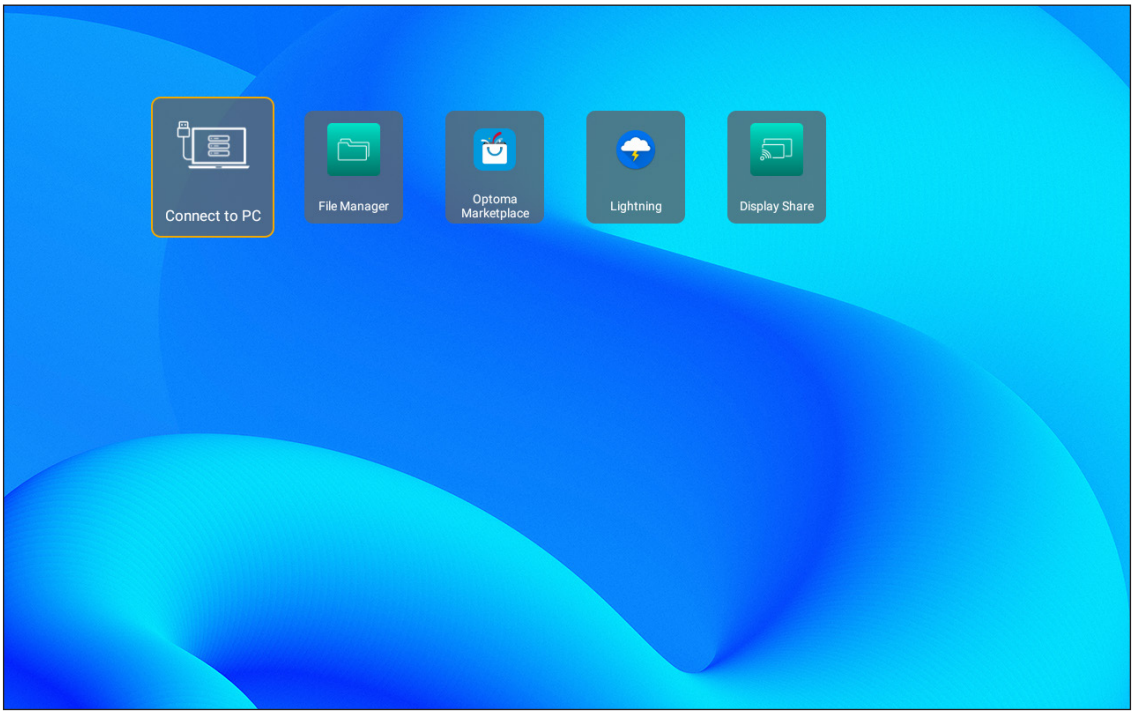

Display Share

To get the App, you can do either of the following:

- if you are using the mobile device, scan the QR code on the screen.
- if you are using the computer, simply go to the link.

Then install the Display Share app in your computer or mobile device.

Before you get started, make sure to connect your computer or mobile device to the same Wi-Fi as the projector. Then follow the on-screen instructions to operate the App.

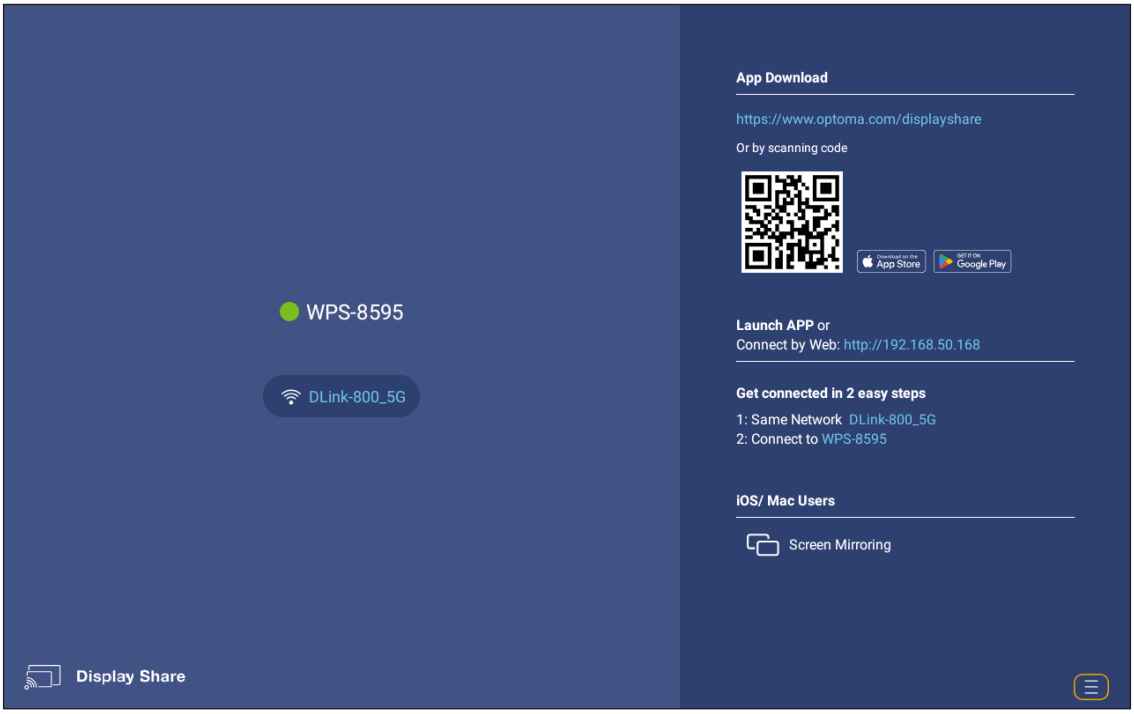

Note: *For initial activation of the iOS screen mirroring function, please ensure the projector is connected to the internet, then launch the Display Share app. You are only required to perform this initial step once and after the initial connection is established, the Display Share app does not need to be open for future use of the iOS screen mirroring function.*

USING THE PROJECTOR

Optoma Marketplace

With the Optoma Marketplace app, you can search and install any App.

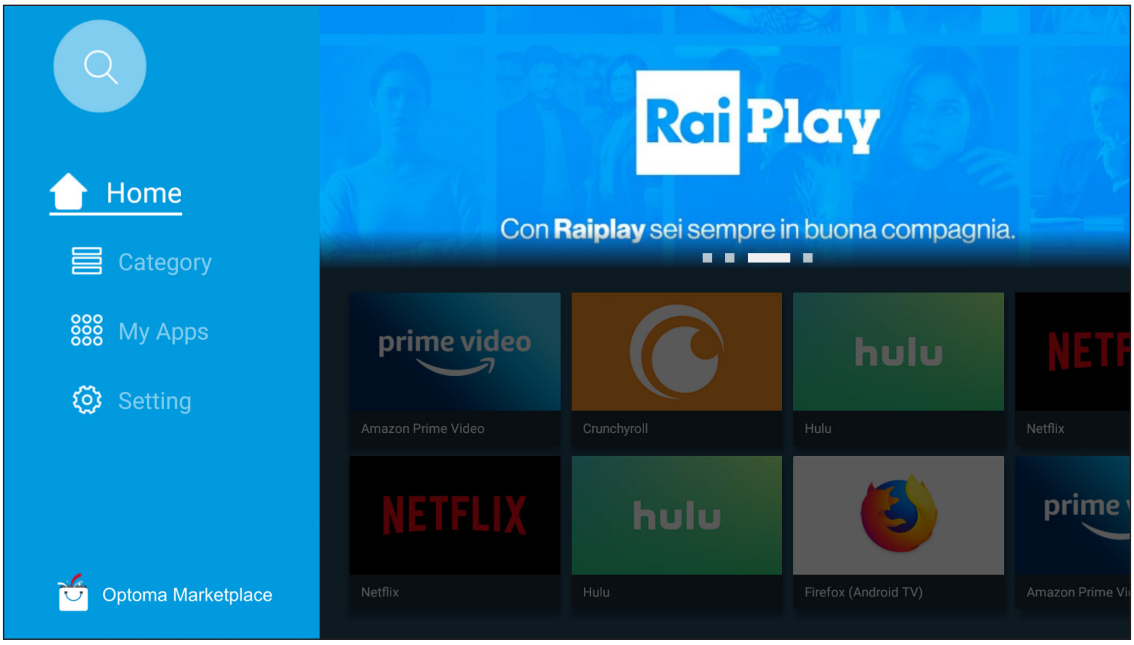

File Manager

With the File Manager app, you can manage the files stored in the internal storage, external storage, and cloud storage.

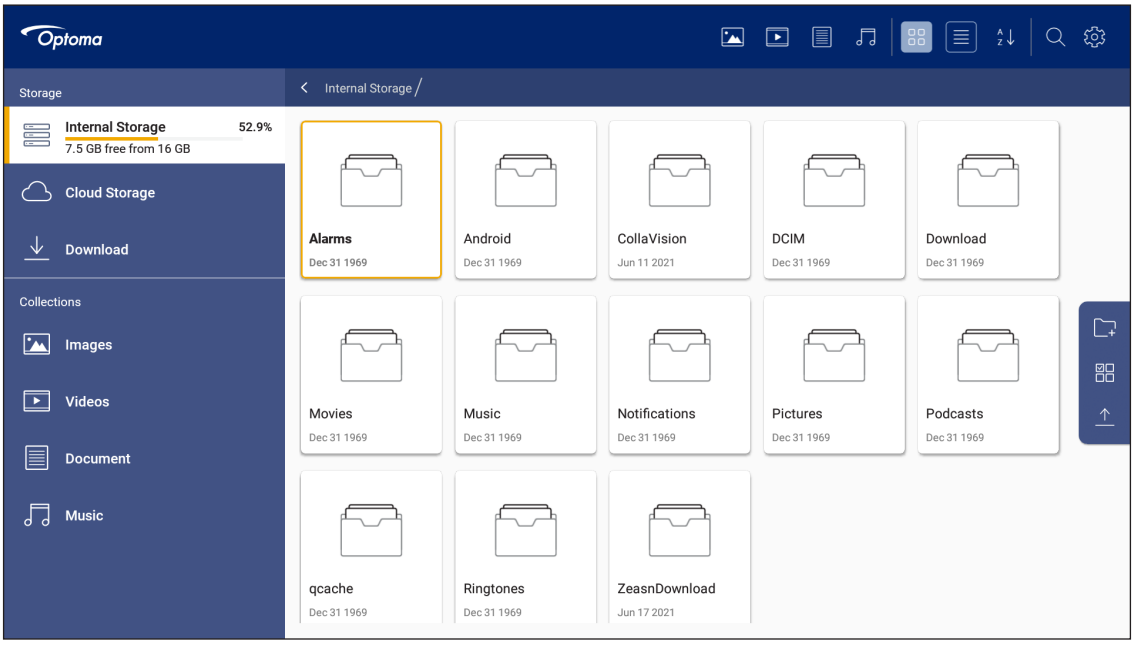

ADDITIONAL INFORMATION

Compatible resolutions

EDID Timing

B0/Established Timing			B0/Standard Timing			B0/Detail Timing	
Resolution	V [Hz]	H [Hz]	Resolution	V [Hz]	Ratio	Resolution	V [Hz]
720x400	70	31.5	800x600	120	4:3	1280x800	60
640x480	60	31.5	1024x768	120	4:3		
640x480	66.6(67)	34.9	1280x720	60	16:9		
640x480	72	37.9	1280x720	120	16:9		
640x480	75	37.5	1280x1024	60	5:4		
800x600	56	35.1	1440x900	60	16:10		
800x600	60	37.9	1680x1050	60	16:10		
800x600	72	48.1					
800x600	75	46.9					
832x624	75	48.9					
1024x768	60	48.4					
1024x768	70	56.5					
1024x768	75	60					
1280x1024	75	80					
1152x870	75	67.5	Be limited within 8 resolutions				

B1/Video Mode		B1/Detail Timing	
Resolution	H [Hz]	Resolution	V [Hz]
640x480p 4:3	60	1366x768	60
720(1440)x576i 4:3	50	1920x1080	60
720(1440)x576i 16:9	50		
720(1440)x480i 4:3	60		
720(1440)x480i 16:9	60		
720x576p 4:3	50		
720x576p 16:9	50		
720x480p 4:3	60		
720x480p 16:9	60		
1280x720p 16:9	50		
1280x720p 16:9	60		
1920x1080i 16:9	60		
1920x1080i 16:9	50		
1920x1080p 16:9	24		
1920x1080p 16:9	30		
1920x1080p 16:9	50		
1920x1080p 16:9	60		

ADDITIONAL INFORMATION

Multimedia support format

Audio Format

Decoder	Audio Codec	Channel	Bit rate	Sampling rate	File Format	Remarks
MPEG	MPEG1/2/2.5 Audio Layer1/2/3	2	8kbps~320Kbps, CBR and VBR	8KHZ~48KHz	MP1, MP2, MP3	n.a
OGG	Q1~ Q10	2	n.a	8KHZ~48KHz	OGG, OGA	n.a
FLAC	Compress Level 0~8	2	n.a	8KHZ~48KHz	FLACC	n.a
AAC	ADIF, ATDS Header AAC-LC and AAC-HE, AAC-ELD	5.1	n.a	8KHZ~48KHz	AAC, M4A	n.a

Video Format

Decoder	Video Codec	Supported Image Size	Maximum Frame Rate	Maximum Bit Rate	File Format	Remarks
MPEG-1/2	MPEG-1/2	48x48 pixels to 1920x1088 pixels	30fps	80Mbps	DAT, MPG, VOB, TS	Support Field Coding
H.264/AVC	H.264	48x48 pixels to 4096x2304 pixels	2304p@30fps	100Mbps	AVI, MKV, MP4, MOV, 3GP, TS, FLV	(1) Support Field Coding (2) Support MBAFF (3) Support High and High10 Profile
MOTION JPEG	MJPEG	48x48 pixels to 1920x1088 pixels	30fps	38.4Mbps	AVI	n.a

Photo Format

Decoder	Image Codec	Support Image Size	Container	Remarks
JPEG	JFIF file format 1.02	48x48 pixels to 8176x8176pixels	JPG,JPEG	(1) Not Support Non-interleaved Scan Remarks (2) Software support SRGB JPEG (3) Software support Adobe RGB JPEG
BMP	BMP	No Restriction	BMP	n.a
GIF	GIF	No Restriction	GIF	n.a
PNG	PNG	No Restriction	PNG	n.a
WEBP	WEBP	No Restriction	WEBP	n.a

ADDITIONAL INFORMATION

Office Viewer

Document Format	Support Version and Format
PDF	PDF 1.7 and above(*.pdf)
Writter (Word)	Microsoft Word 97/2000/XP/2003 Document(*.doc)
	Microsoft Word 97/2000/XP/2003 Template(*.dot)
	Microsoft Word 2007/2010 Document(*.docx)
	Microsoft Word 2007/2010 Template(*.dotx)
	Text Files(*.txt, *.log)
Spreadsheet (Excel)	Microsoft Excel 97/2000/XP/2003 Workbook(*.xls)
	Microsoft Excel 2007/2010 Workbook(*.xlsx)
	Text Files(*.csv)
	Microsoft Excel 97/2000/XP/2003 Template(*.xlt)
	Microsoft Excel 2007/2010 Template(*.xltx)
Presentation (PowerPoint)	Microsoft PowerPoint 97/2000/XP/2003 Presentation(*.ppt, *.pps)
	Microsoft PowerPoint 2007/2010 Presentation(*.pptx, *.ppsx)
	Microsoft PowerPoint 97/2000/XP/2003 Presentation Templates(*.pot)
	Microsoft PowerPoint 2007/2010 Presentation Templates(*.potx)

USB Support Format
FAT32
NTFS
exFAT

ADDITIONAL INFORMATION

Image size and projection distance

ML1050STi model

Desired Distance (m) <B>	Screen Size		Top
	Diagonal (inch) <A>	W (cm) x H (cm)	From base to top of image (cm) <C>
0.86	50	107 x 67	67
1.04	60	129 x 81	81
1.21	70	151 x 94	94
1.39	80	172 x 108	108
1.56	90	194 x 121	121
1.73	100	215 x 135	135

Desired image size		Distance (m) <B>	Top (cm)
Diagonal (inch) <A>	W (cm) x H (cm)		From base to top of image <D>
50	108 x 67	0.86	67
60	129 x 81	1.041	81
70	151 x 94	1.21	94
80	172 x 108	1.39	108
90	194 x 121	1.56	121
100	215 x 135	1.73	135

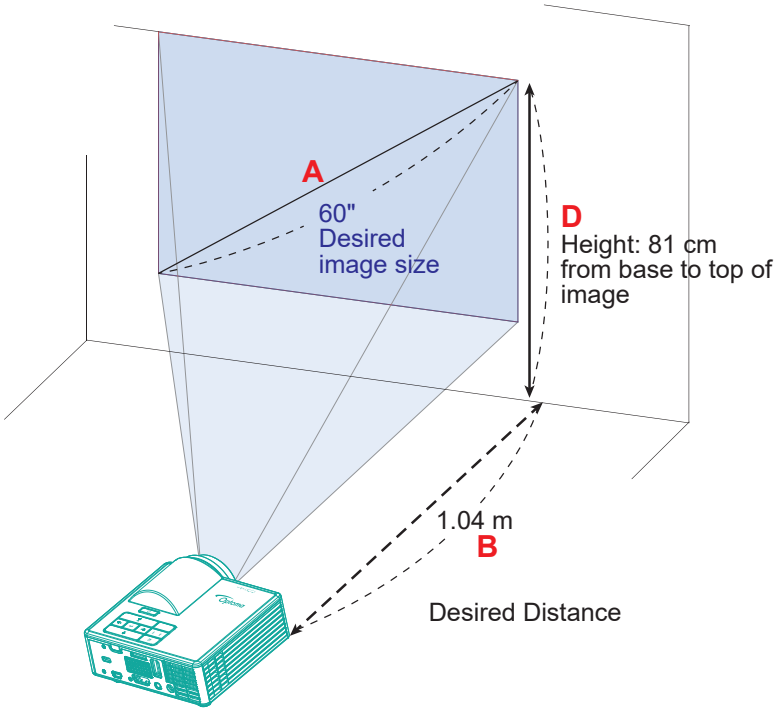

ADDITIONAL INFORMATION

ML750i model

Desired Distance (m) <B>	Screen Size		Top
	Diagonal (inch) <A>	W (cm) x H (cm)	From base to top of image (cm) <C>
0.97	30	65 x 40	40
1.29	40	86 x 54	54
1.62	50	108 x 68	68
1.94	60	129 x 81	81
2.26	70	151 x 94	94
2.58	80	172 x 108	108

Desired image size		Distance (m) <B>	Top (cm)
Diagonal (inch) <A>	W (cm) x H (cm)		From base to top of image <D>
30	65 x 40	0.969	40
40	86 x 54	1.292	54
50	108 x 67	1.62	67
60	129 x 81	1.94	81
70	151 x 94	2.26	94
80	172 x 108	2.58	108

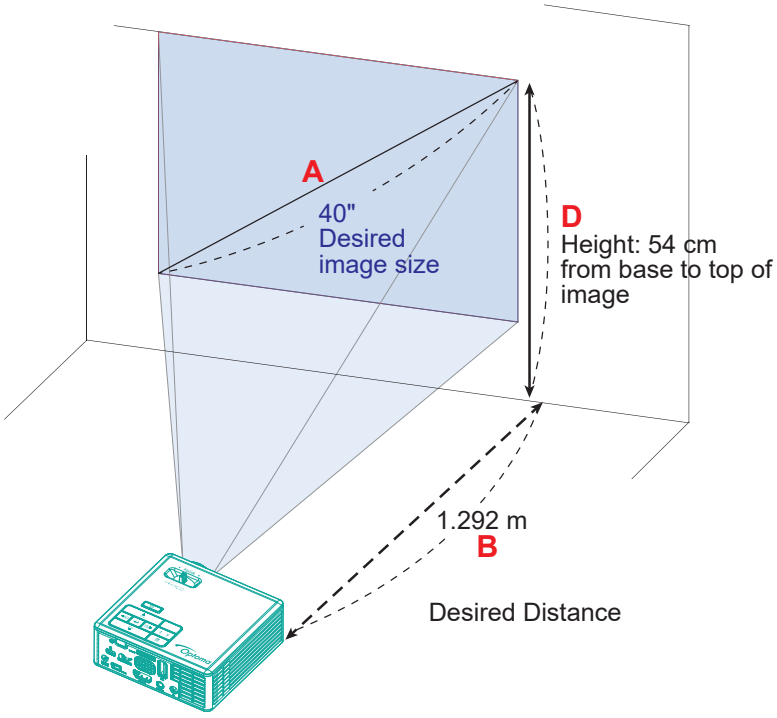

ADDITIONAL INFORMATION

Tripod mount the projector

Screw a standard tripod into the screw hole on the projector.

Note: *Please note that damage resulting from incorrect installation will void the warranty.*

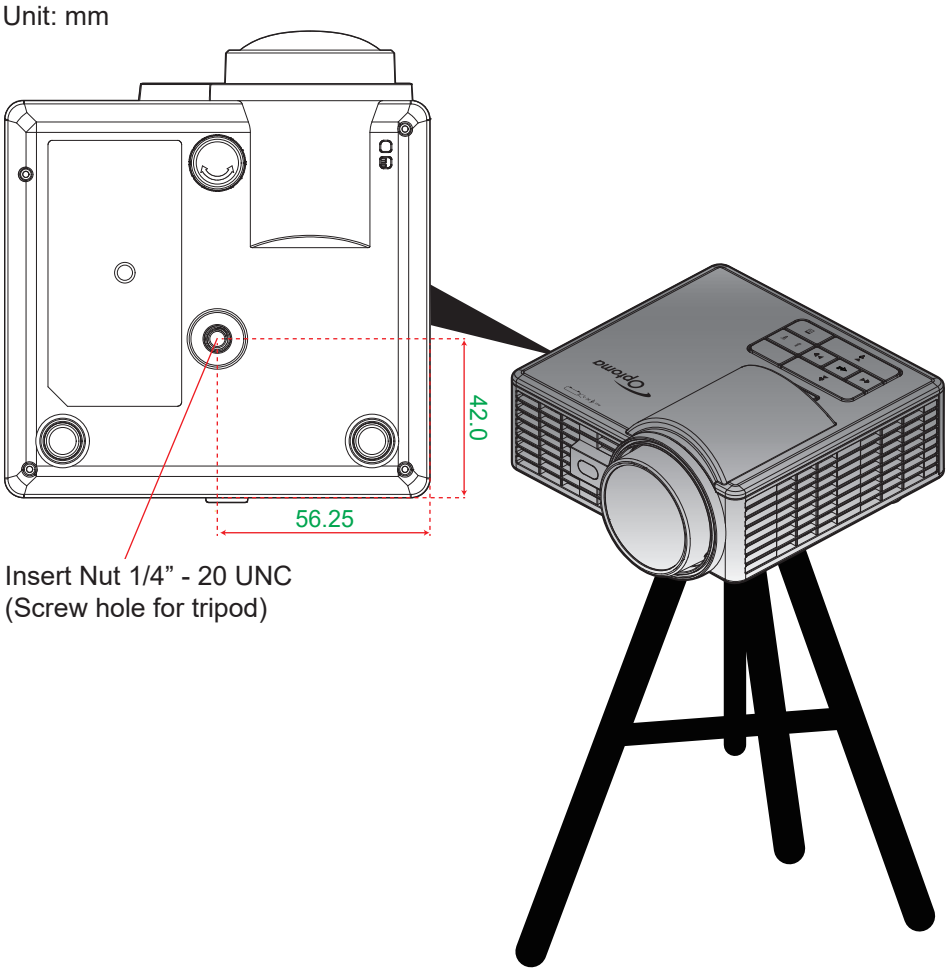

ADDITIONAL INFORMATION

IR remote control codes

Key		NEC format	Customer Code		Key Code		Description
			Byte 1	Byte 2	Byte 3	Byte 4	
Power		Format 1	32	CD	02	FD	Press to turn on / off the projector.
Aspect ratio		Format 1	32	CD	64	9B	Press to change the aspect ratio of a displayed image.
Source		Format 1	32	CD	C3	3C	Press to select an input signal.
Mode		Format 1	32	CD	5	FA	Multiple function depends on the input source. • HDMI: Change the Picture mode of a displayed image. • Home (USB-A or SD Card): Back to Android Home / Launcher.
Four directional select keys (Up)	^	Format 2	32	CD	11	EE	Press to select items or make adjustments to your selection.
Four directional select keys (Left)	<	Format 2	32	CD	10	EF	
Four directional select keys (Right)	>	Format 2	32	CD	12	ED	
Four directional select keys (Down)	v	Format 2	32	CD	14	EB	
Enter	o	Format 1	32	CD	0F	F0	Confirm your item selection.
Settings/Setup Menu		Format 1	32	CD	A8	57	Multiple function depends on the input source. • HDMI: Enter to Setup menu. • Home (USB-A or SD Card): Launch Android Menu.

ADDITIONAL INFORMATION

Key		NEC format	Customer Code		Key Code		Description
			Byte 1	Byte 2	Byte 3	Byte 4	
Return	⮌	Format 1	32	CD	0D	F2	Press to return to the previous menu.
Menu	≡	Format 1	32	CD	0E	F1	Press to display or exit the on-screen display menus.
Volume -	🔉	Format 2	32	CD	8F	70	Press to decrease the volume.
Mute	🔇	Format 1	32	CD	52	AD	Press to momentarily turn off / on the audio.
Volume +	🔊	Format 2	32	CD	8C	73	Press to increase the volume.
Freeze	❄	Format 1	32	CD	06	F9	Press to freeze the projector image.
Keystone	⏢	Format 1	32	CD	7	F8	Press to adjust image distortion caused by tilting the projector.
AV Mute	⊘	Format 1	32	CD	03	FC	Press to hide / unhide the screen picture and turn off / on audio.

ADDITIONAL INFORMATION

Troubleshooting

If you experience a problem with your projector, please refer to the following information. If a problem persists, please contact your local reseller or service center.

Image problems

No image appears on-screen

- Ensure all the cables and power connections are correctly and securely connected as described in the "Installation" section.
- Ensure the pins of connectors are not crooked or broken.
- Ensure that the "Mute" feature is not turned on.

Image is out of focus

- Ensure the distance between projector and the edge of table is less then 120mm to avoid light sensor detection interference. (For ML1050STi only.)
- Turn the focus lever clockwise or counterclockwise until the image is sharp and legible. (For ML750i only.) (Please see page *24)*.
- Make sure the projection screen is between the required distance from the projector. (Please refer to pages *51~52*).

The image is stretched when displaying 16:9 DVD title

- When you play anamorphic DVD or 16:9 DVD, the projector will show the best image in 16: 9 format on projector side.
- If you play 4:3 format DVD title, please change the format as 4:3 in projector OSD.
- Please setup the display format as 16:9 (wide) aspect ratio type on your DVD player.

Image is too small or too large

- Use the **Zoom** function or configure the **Aspect Ratio** setting in the Image menu. (Please see page *37*).
- Move the projector closer to or further from the screen.

Image has slanted sides:

- If possible, reposition the projector so that it is centered on the screen and below the bottom of the screen.

Image is reversed

- Select "Display → Projection" from the OSD and adjust the projection direction. (Please see page *39*).

ADDITIONAL INFORMATION

Other problems

The projector stops responding to all controls

- If possible, turn off the projector, then unplug the power cord and wait at least 20 seconds before reconnecting power.

Remote control problems

If the remote control does not work

- Check the operating angle of the remote control is pointed within ±15° to the IR receiver on the projector.
- Make sure there are not any obstructions between the remote control and the projector. Move to within 6 m (19.7 ft) of the projector.
- Make sure batteries are inserted correctly.
- Replace batteries if they are exhausted.

ADDITIONAL INFORMATION

Warning indicators

When the warning indicators (see below) light up or flash, the projector will automatically shutdown:

- “Lamp” LED indicator is lit amber and if “Power” indicator flashes amber.
- “Temp” LED indicator is lit amber and if “Power” indicator flashes amber. This indicates the projector has overheated. Under normal conditions, the project can be switched back on.
- “Temp” LED indicator flashes amber and if “Power” indicator flashes amber.

Unplug the power cord from the projector, wait for 30 seconds and try again. If the warning indicator lights up or flashes, please contact your nearest service center for assistance.

LED lightning messages

Message	Power LED		Temp LED	Lamp LED
	(Amber)	(Blue)	(Amber)	(Amber)
Standby state (Input power cord)	Steady light			
Power on		Steady light		
Power off (Cooling)		Flashing (0.5 sec off / 0.5 sec on). Back to Amber steady light when cooling fan turns off.		
Error (Lamp failure)	Flashing (0.5 sec off / 0.5 sec on)			Steady light
Error (Fan failure)	Flashing (0.5 sec off / 0.5 sec on)		Flashing (0.5 sec off / 0.5 sec on)	
Error (Over temp.)	Flashing (0.5 sec off / 0.5 sec on)		Steady light	
FOTA DDP	Flashing (0.5 sec off / 0.5 sec on)		Flashing (0.5 sec off / 0.5 sec on)	Flashing (0.5 sec off / 0.5 sec on)
Auto MCU		Steady light	Flashing (0.05 sec off / 0.05 sec on)	Flashing (0.05 sec on / 0.05 sec off)

ADDITIONAL INFORMATION

- Power off:

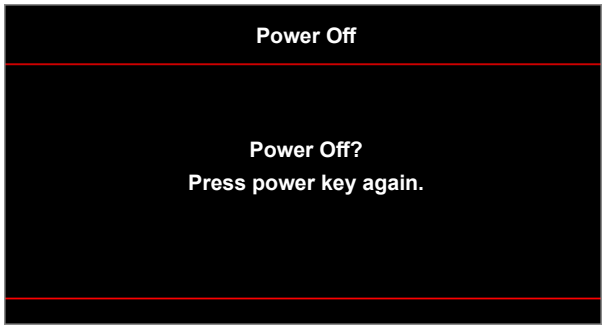

- Temperature warning:

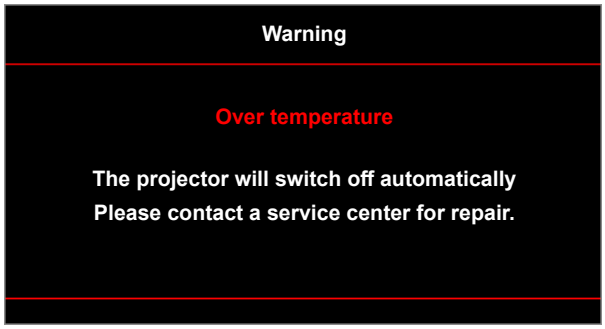

ADDITIONAL INFORMATION

Specifications

Item	ML1050STi	ML750i
Native Resolution	1280x800	1280x800
Maximum Resolution	• Graphic up to 1680x1050@60Hz • Maximum Resolution: HDMI (1.4b): 1920x1080@60Hz • Maximum Bandwidth: HDMI 1.4b: 149MHz	• Graphic up to 1680x1050@60Hz • Maximum Resolution: HDMI (1.4b): 1920x1080@60Hz • Maximum Bandwidth: HDMI 1.4b: 149MHz
Lens	• Throw ratio: 0.8 • F-stop: 1.9 • Focal length: 8.02 mm	• Throw ratio: 1.5 • F-stop: 1.9 • Focal length: 14.95 mm
Offset	100%±5%	100%±5%
Image size	50"~100" (optimized@60’’)	30"~80" (optimized@40’’)
Projection distance	0.86 m@50” ~ 1.73 m@100"	0.969 m@30” ~ 2.58 m@80"
I/Os	• HDMI 1.4b x 1 • USB Type-A x 1 for Power USB 5V/0.5A and Wi-Fi dongle • SD card slot • Mini USB (RS232 control)	• HDMI 1.4b x 1 • USB Type-A x 1 for Power USB 5V/0.5A and Wi-Fi dongle • SD card slot • Mini USB (RS232 control)
Colour	16.7 Million color	16.7 Million color
Scan rate	• Horizontal scan rate: 30~80 KHz • Vertical scan rate: 24~75Hz, (120Hz for 3D feature)	• Horizontal scan rate: 30~80 KHz • Vertical scan rate: 24~75Hz, (120Hz for 3D featured)
Speaker	2.0W x1, Maximum 1.5W drive power	2.0W x1, Maximum 1.5W drive power

Power Consumption	• Maximum: (Bright mode)
	  • 60W (typical), 69W (max.) @110VAC
	  • 57W (typical), 66W (max.) @220VAC
	• Minimum: (ECO mode)
	  • 25W (typical), 29W (max.) @110VAC
	  • 23W (typical), 27W (max.) @220VAC
		• Maximum: (Bright mode)
		  • 60W (typical), 69W (max.) @110VAC
		  • 57W (typical), 66W (max.) @220VAC
		• Minimum: (ECO mode)
		  • 25W (typical), 29W (max.) @110VAC
		  • 23W (typical), 27W (max.) @220VAC

Input current	AC in 1.5A (DC in 3,42A) max	AC in 1.5A (DC in 3,42A) max
Installation orientations	Front, Rear, Ceiling, Rear-top	Front, Rear, Ceiling, Rear-top
Dimensions (WxDxH)	• w/o lens ring and rubber foot: 112.5x105x39.9mm (4.4x4.1x1.6 inches) • With feet: 112.5x105x48.1mm (4.4x4.1x1.9 inches)	• w/o lens ring and rubber foot: 106.3x105x39.1mm (4.2x4.1x1.6 inches) • With feet: 106.3x105x42.1mm (4.2x4.1x1.7 inches)
Weight	470g±5g	384g±5g
Environmental	Operating in 0~40°C, 10% to 80% humidity (non-condensing)	Operating in 0~40°C, 10% to 80% humidity (non-condensing)

Note: *All specifications are subject to change without notice.*

ADDITIONAL INFORMATION

Optoma global offices

For service or support, please contact your local office.

USA
Optoma Technology, Inc.
47697 Westinghouse Drive.
Fremont, Ca 94539

888-289-6786
510-897-8601
services@optoma.com

Canada
Optoma Technology, Inc.
47697 Westinghouse Drive.
Fremont, Ca 94539

888-289-6786
510-897-8601
services@optoma.com

Latin America
Optoma Technology, Inc.
47697 Westinghouse Drive.
Fremont, Ca 94539

888-289-6786
510-897-8601
services@optoma.com

Europe
Unit 1, Network 41, Bourne End Mills
Hemel Hempstead, Herts,
HP1 2UJ, United Kingdom
www.optoma.eu
Service Tel : +44 (0)1923 691865

+44 (0) 1923 691 800
+44 (0) 1923 691 888
service@tsc-europe.com

Benelux BV
Randstad 22-123
1316 BW Almere
The Netherlands
www.optoma.nl

+31 (0) 36 820 0252
+31 (0) 36 548 9052

France
Bâtiment E
81-83 avenue Edouard Vaillant
92100 Boulogne Billancourt, France

+33 1 41 46 12 20
+33 1 41 46 94 35
savoptoma@optoma.fr

Spain
C/ José Hierro,36 Of. 1C
28522 Rivas VaciaMadrid,
Spain

+34 91 499 06 06
+34 91 670 08 32

Deutschland
Am Nordpark 3
41069 Mönchengladbach
Germany

+49 (0) 2161 68643 0
+49 (0) 2161 68643 99
info@optoma.de

Scandinavia
Lerpeveien 25
3040 Drammen
Norway

+47 32 98 89 90
+47 32 98 89 99
info@optoma.no

PO.BOX 9515
3038 Drammen
Norway

Korea
https://www.optoma.com/kr/

Japan
https://www.optoma.com/jp/

Taiwan
https://www.optoma.com/tw/

China
Room 2001, 20F, Building 4,
No.1398 Kaixuan Road,
Changning District
Shanghai, 200052, China

+86-21-62947376
+86-21-62947375
www.optoma.com.cn

Australia
https://www.optoma.com/au/