PRO-TURN® EV

Operator's Manual
Manuel de l'utilisateur

GRAVELY

Models

997005 – PRO-TURN EV 48 SD
(SN 002000 +)

997006 – PRO-TURN EV 52 SD
(SN 002000 +)

997007 – PRO-TURN EV 60 SD
(SN 002000 +)

997008 – PRO-TURN EV 48 RD
(SN 002000 +)

997009 – PRO-TURN EV 52 RD
(SN 002000 +)

997010 – PRO-TURN EV 60 RD
(SN 002000 +)

997011 – PRO-TURN EV 48 SD
(SN 002000 +)

997012 – PRO-TURN EV 52 SD
(SN 002000 +)

997013 – PRO-TURN EV 60 SD
(SN 002000 +)

997014 – PRO-TURN EV 48 RD
(SN 002000 +)

997015 – PRO-TURN EV 52 RD
(SN 002000 +)

997016 – PRO-TURN EV 60 RD
(SN 002000 +)

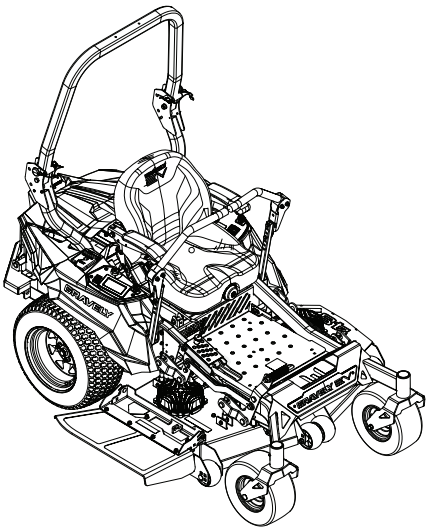

E10 E15 E20 E85

EN **ENGLISH**

FR **FRANÇAIS**

30276000 • 7/24
Printed in USA

TABLE OF CONTENTS

WELCOME 1
Register Your Product!. 1
SAFETY. 2
Practices & Laws 2
Required Operator Training 2
Safety Alert Symbol 2
Signal Words 2
Safety Decals. 3
Safety Rules. 6
ASSEMBLY 11
Connect Hood Switch 11
CONTROLS AND FEATURES 13
Key Switch 15
Charge Port 15
Digital Display 15
Display Navigation Switch 15
Power-Take-Off (PTO) Knob 15
USB Port 16
Battery Charger 16
Vehicle Control Module 16
Height-of-Cut Adjustment System 16
High / Low Speed Switch 16
Eco Mode Switch 17
Battery Busbar 17
Transport Lock Release Lever. 17
EMI Filter 17
110VPower Cord 18
Deck Lift Pedal. 18
Seat Adjustment Lever. 18
Rollover Protection Structure (ROPS) . . 18
Safety Interlock System 18
Steering Levers 18
Anti-scalp Wheels 18
Parking Brake Switch. 18
Bypass Handle. 18
Ride Adjustment Knob 18
Backrest Adjustment Lever 18
Armrest Angle Adjustment Knobs 18
BusBar Cover. 19
Deck Motors. 19
Deck Controllers 19
Traction Drive Motors. 19
Traction Drive Controllers 19
Audible Alarm. 19
DIGITAL DISPLAY 20
Side Bar Navigation 21
Home Screen 21
Power Screen 22
Maintenance Screen 23
Charge Screen. 23
Balance Screen 24
Steering Sensor Calibration Screen. . . . 24
Diagnostic Screen 25
Fault History Screen 27
Part Number Screen 27
OPERATION 28
Emergency Stopping 28
Before Operating Unit 28
Position ROPS. 28
Start The System 29
Operate Unit 29
Stop The Unit. 30
Move Unit Manually 30
Transport Unit 30
Release Transport Lock. 30
Activate Eco Mode. 31
MAINTENANCE 31
Maintenance Schedule 31
Service Parts 31
Check Mower Blades. 32
Check Safety Interlock System 33
Change Gearcase Oil 34
Check Faults / Warnings 34
Battery Access. 35
Check Parking Brake. 35
Check Tire Pressure 35
Check Fasteners 35
Lubricate Unit. 36
Check Battery Balance 36
Auto-Balance Feature 37
Check SOC 37
Charge Batteries 37
ADJUSTMENTS 39
Remove Batteries 39
Install Batteries 39
Install Busbar Cover 39
Adjust Seat 40
Adjust Steering Levers. 41
Adjust Unit to Drive Straight. 42
Calibrate Steering Sensors 42
Adjust Hood Latch Magnetic Switch . . . 43
Remove Deck 43
Level and Pitch Mower Deck 44
FAULT / WARNING CODE INDEX 46
FAULTS. 46
WARNINGS. 47
TROUBLESHOOTING 50
STORAGE. 52
Short-Term Storage. 52
Long-Term Storage 52
Battery Storage Temperatures 52
ACCESSORIES. 53
BATTERY DISPOSAL 53
SPECIFICATIONS. 54

TABLE OF CONTENTS

SPECIFICATIONS. **55**
WARRANTY **56**

WELCOME

Congratulations on your purchase and welcome to the Gravely family! Every machine in the Gravely lineup is designed for long-lasting and unsurpassed performance. We are confident your machine will be part of your family for many years to come.

Have Questions or Need Assistance?
www.gravely.com

A parts manual for your unit is available for free download or purchase at www.gravely.com.

Manual del operador español está disponible para su descarga gratuita o compra en www.gravely.com.

REGISTER YOUR PRODUCT!

It is extremely important to register your product at time of purchase. Product registration activates the warranty and establishes a communication link from AriensCo.

Locate the model and serial number decal on your unit and register those numbers online at www.gravely.com. See Figure 1 for decal location. Be aware that the original selling dealer may have already completed product registration on behalf of the original purchaser.

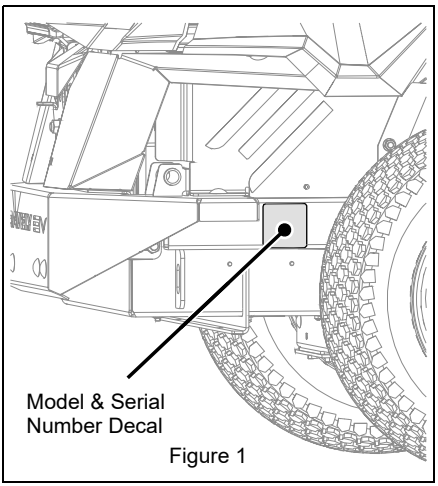

Figure 1

Record model number here.

Record serial number here.

MANUALS

Before operating or servicing the unit, carefully and completely read the manuals provided with the unit. They contain safety instructions and important information about unit controls.

Your dealer must review important information in this manual with you before or upon delivery of the unit. It is your responsibility to read and understand all safety precautions and instructions in the manuals. If you do not understand or have difficulty following the instructions, contact an authorized Gravely EV dealer for assistance. To locate your nearest Gravely EV dealer, go to www.gravely.com.

DISCLAIMER

Gravely reserves the right to discontinue, make changes to, and add improvements upon its products at any time without public notice or obligation. The descriptions and specifications contained in this manual were in effect at printing. Equipment described in this manual may be optional. Some illustrations may not be applicable to your unit.

SAFETY

Read these safety rules and follow them closely. Failure to follow these rules could lead to loss of control of unit, severe personal injury or death to you or bystanders, or result in damage to property or the unit.

PRACTICES & LAWS

Practice usual and customary safe working precautions. Learn applicable rules and laws in your area. ALWAYS follow the practices set forth in this manual.

REQUIRED OPERATOR TRAINING



Read and understand the Operator's Manual and decals on the unit. This information is for your safety and the proper use of your equipment. Failure to follow these instructions and warnings may cause death or serious injury. If you have purchased this product from an authorized Gravely EV dealer, the dealer can provide you with training.

Familiarize yourself and any other operators with all controls and the safe use of the features of this unit. If you loan, rent or sell this product to others, provide them with all manuals.

If you have any questions, please call our customer support line at 920-756-4688 or contact us at www.gravely.com. Do not use this equipment if, after reading the Operator's Manual and the on-board decals, you have any questions about the safe use of this product.

WARNING: AVOID INJURY. This cutting machine is capable of amputating body parts and throwing objects. Failure to observe the safety instructions in the manuals and on decals could result in serious injury or death.

ALWAYS disengage blades, stop unit, remove key, set parking brake and allow moving parts to stop before leaving operator's position.

SAFETY ALERT SYMBOL

This is the safety alert symbol. It means:

- **ATTENTION!**
- **YOUR SAFETY IS INVOLVED!**

When you see this symbol:

- **BECOME ALERT!**
- **OBEY THE MESSAGE!**

SIGNAL WORDS

The safety alert symbol above and signal words below are used on decals and in this manual. Read and understand all safety messages.

1. Danger

DANGER: Indicates an IMMINENTLY HAZARDOUS SITUATION! If not avoided, WILL RESULT in death or serious injury.

2. Warning

WARNING: Indicates a POTENTIALLY HAZARDOUS SITUATION! If not avoided, COULD RESULT in death or serious injury.

3. Caution

CAUTION: Indicates a POTENTIALLY HAZARDOUS SITUATION! If not avoided, MAY RESULT in minor or moderate injury. It may also be used to alert against unsafe practices.

4. Notice

NOTICE: Indicates information or procedures that are considered important but not hazard related. If not followed, property damage could result.

5. Important

IMPORTANT: Indicates general reference information worthy of special attention.

SAFETY DECALS

The safety decals on your unit are visual reminders of the important safety information in this manual. All messages on your unit must be fully understood and carefully followed. Safety decals on the unit are explained below.

ALWAYS replace missing or damaged safety decals. Replacement decal information is in the parts manual for your unit. Decals can be ordered from your dealer.

See Figure 2 for safety decal locations.

Safety Decal Locations

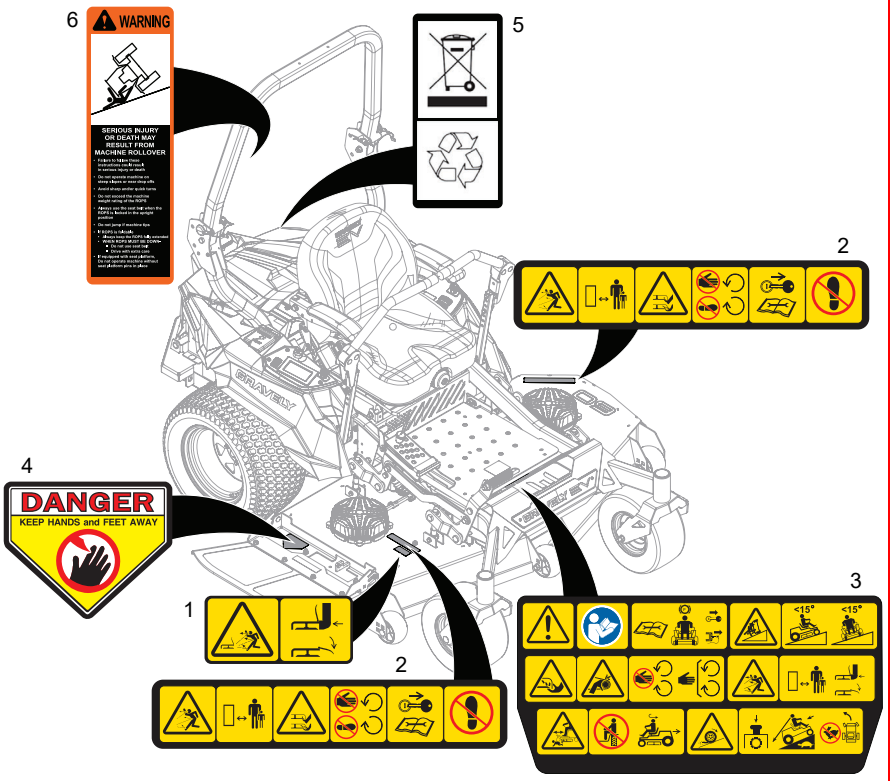

Figure 2

Safety Decal Descriptions

1. DANGER!



Discharge Hazard – NEVER operate unit without discharge chute in operating position. Thrown objects can cause injury or damage.



DO NOT operate mower unless all guards are in operating position or bagger is attached.

2. DANGER!



Discharge Hazard – NEVER direct discharge toward people, pets or property. Thrown objects can cause injury or damage.



Keep children and others away from unit while unit is in operation.



Amputation Hazard – NEVER stick hands or feet under deck or shielded areas.



Keep hands and feet away from all rotating or moving parts.



Remove batteries and read manual before servicing or making adjustments to unit.



DO NOT step or stand in this area.

3. DANGER!



DANGER!



Read Operator's Manual.

3. Service Hazard



Read Operator's Manual before servicing or making adjustments to unit.



Set parking brake.

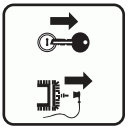

Does not apply to this unit.

3. Tipping Hazard



Avoid tipping hazard.



DO NOT operate on slopes over 15°.



DO NOT operate on slopes over 15°.



To avoid amputation hazard, DO NOT put hands near rotating blades.



Does not apply to this unit.



Keep hands away from all rotating or moving parts.



Keep all guards and shields in place.

3. Discharge Hazard



NEVER direct discharge toward people, pets or property. Thrown objects can cause injury or damage.



Keep children and others away from unit while unit is in operation.



DO NOT operate mower unless all guards are in operating position or bagger is attached.

3. Bystander Hazard



DO NOT operate the unit in the presence of bystanders.



DO NOT carry passengers.



Look behind when operating the unit in reverse.

3. Loss of Traction Hazard



If loss of traction is experienced do the following:

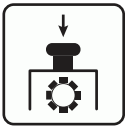

Disengage PTO.



Look before backing. Proceed off slope slowly.



DO NOT try to turn or speed up.

4. DANGER!



Keep hands and feet away from all rotating or moving parts.

5. DISPOSAL / RECYCLING



Batteries are recyclable. DO NOT dispose of batteries in household or commercial waste bin.



Reuse of recycled material decreases pollution in the environment. Contact an authorized Gravely EV dealer to recycle battery.

6. WARNING!



SERIOUS INJURY OR DEATH may result from machine rollover.

- Failure to follow these instructions could result in serious injury or death.
- DO NOT operate machine on steep slopes or near drop offs.
- Avoid sharp and/or quick turns.
- DO NOT exceed the machine weight rating of the ROPS.
- ALWAYS use the seat belt when the ROPS is locked in the upright position.
- DO NOT jump if machine tips.
- If ROPS is foldable:
  - — ALWAYS keep the ROPS fully extended.
  - — WHEN ROPS MUST BE DOWN:
    - DO NOT use seat belt.
    - Drive with extra care.
- If equipped with seat platform:
  - — DO NOT operate machine without seat platform pins in place or locks engaged.

ROLLOVER PROTECTIVE STRUCTURE

To maintain operator protection and roll bar certification:

- Replace a damaged roll bar, DO NOT attempt to repair or modify.
- Any alteration of the roll bar must be approved by the manufacturer.
- DO NOT exceed the machine weight rating of the roll bar.

SAFETY RULES

The following safety instructions are based on the present state of knowledge and current legislation (B71.4 specifications of the American National Standards Institute and ISO 5395).

This safety information provides guidance on health, safety and environmental aspects of the product and should not be construed as any guarantee of technical performance or suitability for particular applications.

Training
Read, understand and follow all instructions on the machine and in the manual(s) before operating this unit.
Keep the area of operation clear of all persons, particularly small children. Be alert and shut off unit if children enter area.
Complete a walk-around inspection of the unit to understand the unit, your work area and all safety decals.
Understand: • How to operate all controls • The functions of all controls • How to STOP in an emergency • Braking and steering characteristics • Turning radius and clearances If the operator or the mechanic cannot read the manual, it is the owner's responsibility to explain it to them.
Only allow responsible adults, who are familiar with the instructions, to operate this machine.
ALWAYS train any inexperienced operators and require them to read and understand all manuals and decals.
Only the user can prevent and is responsible for accidents or injuries occurring to themselves, other people or property.

Operator Age
DO NOT allow children under the age of 18 to operate outdoor power equipment.
Local regulations may restrict the age of the operator.
Data indicates operators above age 60 are involved in a large percentage of riding mower-related injuries. These operators should evaluate their ability to operate the riding mower safely enough to protect themselves and others from serious injury.

Children

Tragic accidents can occur if the operator is not alert to the presence of children.

Children are often attracted to the machine and the mowing activity. NEVER assume that children will remain where you last saw them.

Be alert and turn machine off if a child enters the area.

Before and while backing, look behind and down for small children.

NEVER carry children, even with the blade(s) shut off. They may fall off and be seriously injured or interfere with safe machine operation. Children who have been given rides in the past may suddenly appear in the mowing area for another ride and be run over or backed over by the machine.

NEVER allow children to operate the machine.

Use extreme care when approaching blind corners, shrubs, trees, or other objects that may block your view of a child.

Keep children out of the mowing area and in the watchful care of a responsible adult other than the operator.

Keep batteries out of reach of children.

Children should be supervised to ensure that they do not play with the unit.

Personal Protection

DO NOT wear loose clothing or jewelry and tie back hair that may get caught in rotating parts.

Wear adequate outer garments.

NEVER wear open sandals or canvas shoes during operation. Wear adequate safety gear, protective gloves and footwear.

Wear proper footwear to improve footing on slippery surfaces.

ALWAYS wear eye and ear protection when operating machine.

ALWAYS wear safety glasses and protective gear near batteries. Use insulated tools.

Before Operation

Keep all nuts and bolts tight to be sure the equipment is in safe working condition.

Maintain the machine to be in compliance with the maintenance schedule.

Check parking brake operation frequently. Adjust and service as required.

Inspect unit before each use for missing or damaged decals and shields, correctly operating safety interlock system, and deterioration of grass catchers. Replace or repair as needed.

Ensure Safety Interlock System is functioning properly. DO NOT operate unit if safety interlock is damaged or disabled.

NEVER tamper with safety devices. Check their proper operation regularly.

DO NOT clean unit with water. To avoid damage to electrical components and motors, clean unit with compressed air or a dry cloth.

Keep machine free of grass, leaves, or other debris build-up.

To prevent fire hazards, clean the following before each use:

- Underside of mower deck
- Battery busbar
- Controller bay

Operation

Be sure the area is clear of bystanders before operating. Stop machine if anyone enters the area.

ALWAYS maintain unit in safe operating condition.

DO NOT operate machine while feeling tired, ill or under the influence of alcohol or other drugs.

DO NOT put hands or feet near rotating parts or under the machine. Keep clear of the discharge opening at all times.

DO NOT touch parts which are hot. Allow parts to cool.

DO NOT operate machine without the entire grass catcher, discharge guard, or other safety devices in place and working.

ALWAYS keep hands and feet away from all pinch points.

Avoid slippery surfaces. ALWAYS be sure of your footing.

NEVER carry passengers.

NEVER direct discharged material toward anyone. Avoid discharging material against a wall or obstruction. Material may ricochet back toward the operator. Stop the blade(s) when crossing gravel surfaces.

NEVER engage PTO when attachment, including mower blades, is not in use. ALWAYS turn off power to attachment when not in active use such as traveling or crossing driveways.

NEVER engage PTO while raising the attachment, including mower blades, or when attachment is in the raised position.

Keep safety devices or guards in place and functioning properly. NEVER modify or remove safety devices.

DO NOT mow in reverse unless absolutely necessary. ALWAYS look down and behind before and while backing.

Slow down before turning.

If you strike a foreign object, stop and inspect the machine. Repair, if necessary, before restarting.

This unit is not intended for use by persons (including children) with reduced physical, sensory or mental capabilities, or lack of experience and knowledge, unless they have been given supervision or instruction concerning use of the unit by a person responsible for their safety.

Operation Conditions

Lightning can cause severe injury or death. If lightning is seen or thunder is heard in the area, do not operate the machine; seek shelter.

Avoid dangerous environments. DO NOT operate the mower in rain. To reduce the risk of electrical component damage, do not expose to water.

ALWAYS check overhead and side clearances carefully before operation.

Watch for traffic when operating near or crossing roadways.

Clear the area of objects such as rocks, wire, toys, etc., which could be thrown by the blades.

Check for weak spots on docks, ramps or floors. Avoid uneven work areas and rough terrain. Stay alert for hidden hazards or traffic.

Use care when approaching blind corners, shrubs, trees or other objects that may obscure vision.

Dust, smoke, fog, etc. can reduce vision and cause an accident.

Operate machine only in daylight or good artificial light.

Slope Operation

Slopes are a major factor related to loss of control and tip-over accidents, which can result in severe injury or death. Operation on all slopes requires extra caution. If you cannot back up the slope or if you feel uneasy on it, DO NOT mow it.

DO NOT operate on slopes of more than 15°.

Mow up and down slopes, not across.

Watch for holes, ruts, bumps, rocks, or other hidden objects. Uneven terrain could overturn the machine. Tall grass can hide obstacles.

Tires may lose traction causing a loss of control mowing on moist or wet grass

Use extra care while operating machine with grass catchers or other attachments; they can affect the stability of the machine. DO NOT use on steep slopes.

Keep all movements on the slope *slow* and *gradual*. DO NOT make sudden changes in speed or direction, which could cause the machine to roll over.

Avoid starting, stopping, or turning on a slope. If the tires lose traction, disengage the blade(s) and proceed slowly straight down the slope.

Operation on slopes may lead to loss of steering control. When operating on slopes be prepared to react to an emergency situation:

- Return steering levers to neutral position.
- Immediately set parking brake.

DO NOT try to stabilize the machine by putting your foot on the ground.

DO NOT park on slopes unless necessary. When parking on slope, ALWAYS chock or block wheels. ALWAYS set parking brake.

Choose a low ground speed so you will not have to stop or shift while on a slope.

DO NOT operate near drop-offs, ditches, or embankments. Unit can suddenly turn over if a wheel is over the edge of a cliff or ditch, or if an edge caves in.

DO NOT override electric brake to free wheel when on a slope.

Towing / Transporting

Follow the manufacturer's recommendations for weight limits for towed equipment and towing on slopes.

NEVER allow children or others in or on towed equipment.

Tow only with a machine that has a hitch designed for towing. DO NOT attach towed equipment except at the hitch point.

On slopes, the weight of the towed equipment may cause loss of control.

Travel slowly and allow extra distance to stop.

Towing the unit is not recommended.

Accessories

Use only attachments recommended by AriensCo that are appropriate to your use and can be used safely in your application.

Follow the manufacturer's recommendation for wheel weights or counterweights

Check grass catcher components and the discharge guard frequently and replace with the manufacturer's recommended parts, when necessary.

WARNING: Only use accessories provided with or offered for this unit.

Rollover Protection System (ROPS)

Frequently inspect ROPS and seat belt for damage or loose hardware.

Use extreme care when working close to fences, ditches, or on hills.

Check overhead clearance carefully before driving under any objects.

ALWAYS wear seat belt while operating the unit with the ROPS in the upright position.

Only lower ROPS for transport.

DO NOT wear a seat belt while operating the unit with the center bar in the lowered position.

DO NOT weld, cut, drill or modify ROPS in any manner unless instructed by the manufacturer.

Service

The use of non-genuine replacement parts or accessories could adversely affect machine operation and safety.

Maintain or replace safety and instruction labels, as necessary.

ALWAYS remove all batteries before performing any service or maintenance.

Keep unit free of debris.

ALWAYS block wheels and know all jack stands are strong and secure and will hold weight of unit during maintenance.

Release any pneumatic pressure from components slowly.

Lower cutting deck unless a positive mechanical lock is used.

NEVER weld or straighten mower blades.

Mower blades are sharp. Wrap the blade or wear gloves, and use extra caution when servicing them.

Electrical service is to be done by trained professionals only.

Transporting Unit

Use extra care when loading or unloading the machine into a trailer.

Secure unit chassis to transport vehicle. NEVER secure from rods or linkages that could be damaged.

Battery Handling and Use

Batteries when abused may pose fire, explosion and severe burn hazard. Handle with caution.

DO NOT touch any live connections.

Avoid transportation or mechanical impact that may physically damage batteries.

DO NOT expose batteries to temperatures lower than -20° C (-4° F) or above 55° C (130° F) as it will impact the battery life cycle.

Battery terminals should only be cleaned with compressed air or a dry cloth prior to insertion into the machine.

DO NOT use batteries which are not designed for use with the equipment.

DO NOT use modified or damaged batteries.

Battery Storage
Avoid storage in direct sunlight.
Store batteries in a clean, dry location.
DO NOT charge batteries to 100% state of charge (SOC) when storing for a long duration. Charge to less than 80% SOC.
If unit is to be stored unused for a long period, batteries should be removed.

Battery Disposal
Contact an authorized Gravely EV dealer to recycle battery. DO NOT dispose in household or commercial waste bin.
Discharge within the temperature limits of the battery. See *Battery Handling and Use* on page 9.

ASSEMBLY

WARNING: AVOID INJURY. Read and understand entire *Safety* section before proceeding.

NOTICE: Refer to *Controls and Features* on page 13 during assembly.

CONNECT HOOD SWITCH

1. Open battery compartment hood assembly.
2. Remove and retain six tapping screws retaining hood to main arm. Remove hood. See Figure 3.

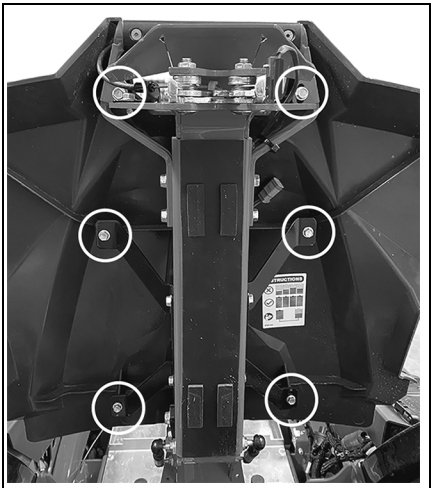

Figure 3

3. If present, cut cable tie retaining hood switch wiring to frame. See Figure 4.





Figure 4

4. Connect hood switch to harness. Ensure that harness routing is clear with no pinch points. See Figure 5.

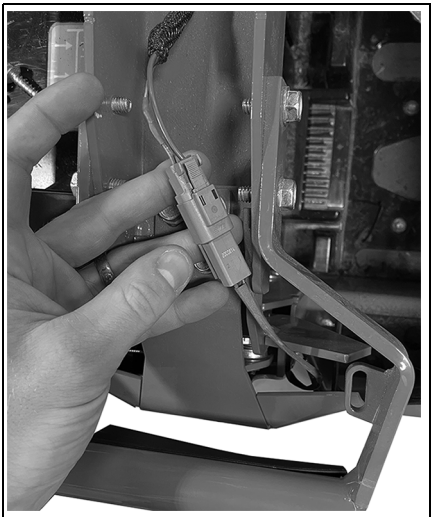

Figure 5

5. Reattach hood to main arm with six tapping screws removed earlier. DO NOT overtighten.
6. Close hood assembly
7. If unit is to be placed into service, charge batteries to 100%. If unit is to be stored in inventory, or stored by the customer, follow proper storage procedures. See *Storage* on page 52.

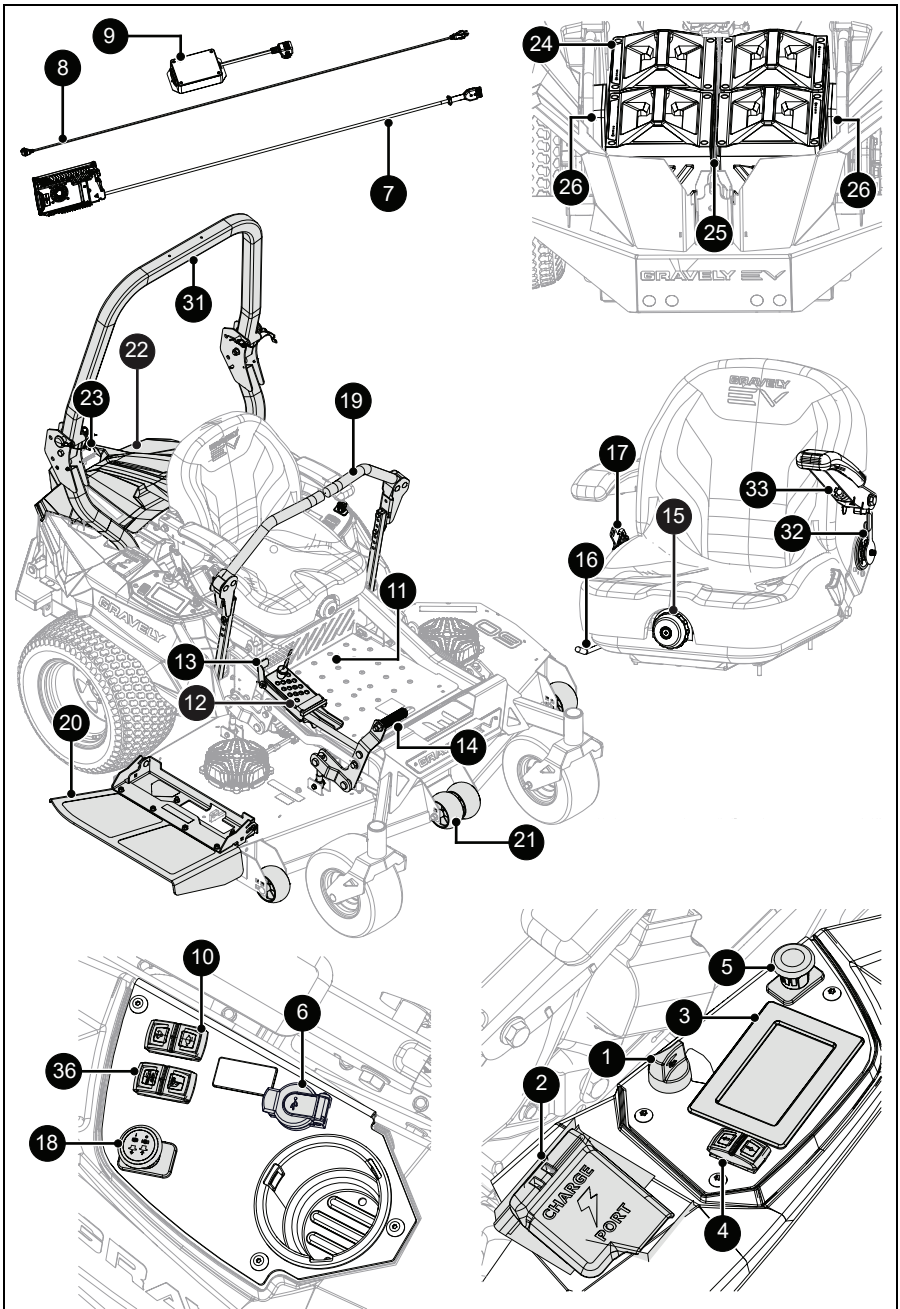
9
8
7
24
26
26
25
GRAVELY EV
31
22
23
19
11
13
12
20
14
21
17
33
15
32
16
10
6
36
18
5
3
1
2
CHARGE
PORT
4

Figure 6

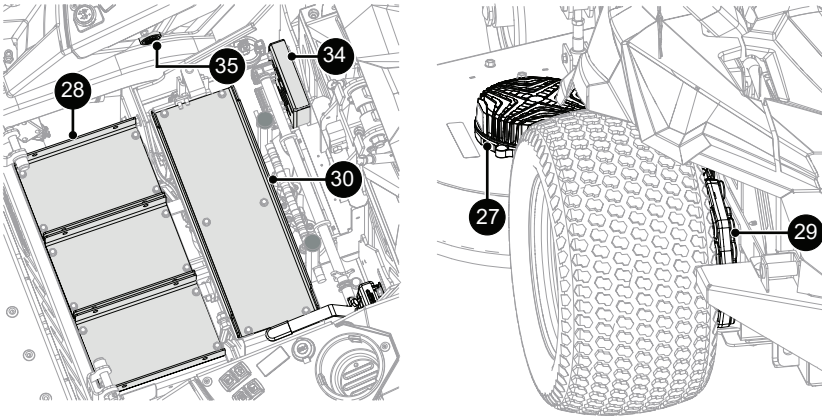

Figure 7

1. Key Switch
2. Charge Port
3. Digital Display
4. Display Navigation Switch
5. Power Take-off (PTO) Knob
6. USB Port
7. Battery Charger
8. 110V Power Cord
9. EMI Filter
10. High / Low Speed Switch
11. Bypass Handle (Below Footplate)
12. Height-of-Cut Adjustment System
13. Transport Lock Release Lever
14. Deck Lift Pedal
15. Ride Adjustment Knob
16. Seat Adjustment Lever
17. Seatbelt
18. Parking Brake Switch
19. Steering Lever (2)
20. Discharge Chute
21. Anti-Scalp Wheel (6)
22. Hood Assembly
23. Hood Latch
24. Battery (4)
25. Battery Busbar (Below Batteries)
26. Busbar Cover (2)
27. Deck Motor (3)
28. Deck Controller (3) (Below Heat Plate)
29. Traction Drive Motor (2)
30. Traction Drive Controller (2) (Below Heat Plate)
31. Rollover Protection Structure (ROPS)
32. Backrest Adjustment Lever
33. Armrest Angle Adjustment Knob (2)
34. Vehicle Control Module (VCM)
35. Audible Alarm
36. Eco Mode Switch
37. Fuse Block
38. Seat Latch Lever

WARNING: AVOID INJURY. Read and understand the entire *Safety* section before proceeding.

See Figure 6 and Figure 7 for all controls and features locations.

KEY SWITCH

See Figure 8.

Controls power to the system. The key cannot be removed when in the on position.

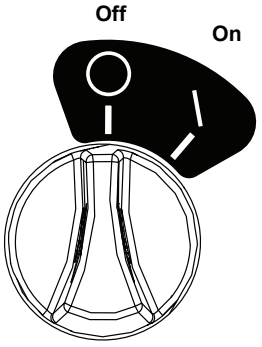

Figure 8

CHARGE PORT

See Figure 9.

Provides a connection point from the charger to the battery pack.

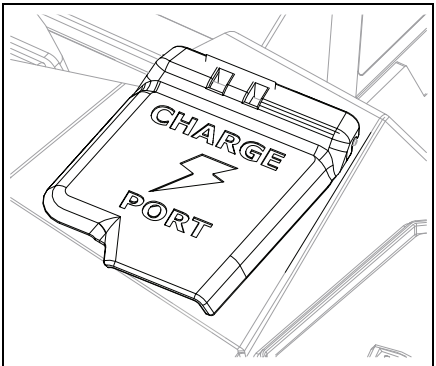

Figure 9

DIGITAL DISPLAY

See Figure 10.

Provides electrical system information to the operator. Digital display is accessible when key switch is turned to the on position and hood assembly is closed. Ensure seat is in the operating position. Display will also turn to the on position when charger is plugged in or batteries are in balance mode.

DISPLAY NAVIGATION SWITCH

See Figure 10.

Navigates digital display functions.

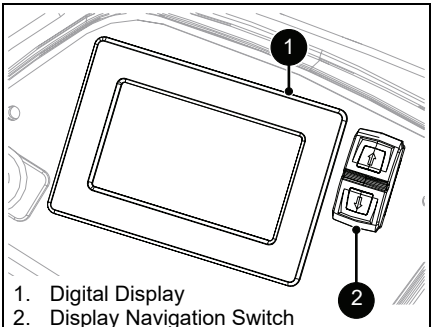

1. Digital Display
2. Display Navigation Switch

Figure 10

POWER-TAKE-OFF (PTO) KNOB

See Figure 11.

Controls power to mower blades. Pull knob up to engage and push knob down to disengage the blades.

WARNING: AVOID INJURY. Blades will not *immediately* stop after pushing PTO knob down to off position.

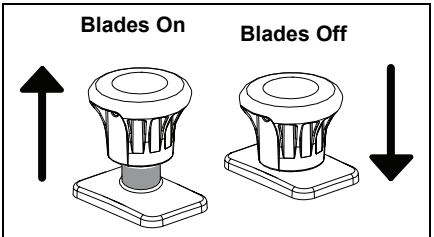

Figure 11

USB PORT

See Figure 12.

NOTICE: DO NOT attempt to charge accessories rated more than 4 amps as it could damage the USB port or mower.

IMPORTANT: Ensure hearing protection and audio devices do not interfere with ability to hear the audible alarm.

Provides 12V of power to USB powered accessories.

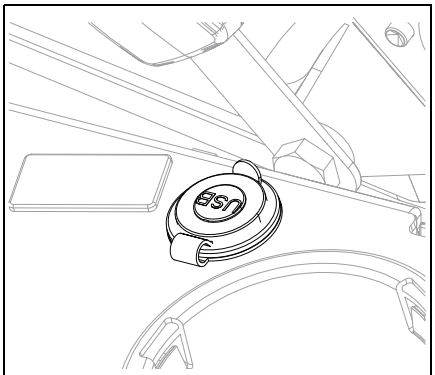

Figure 12

BATTERY CHARGER

See Figure 13.

Provides power to the battery pack when plugged into the charge port.

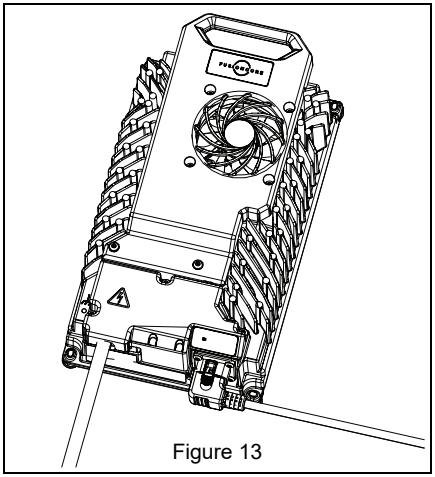

Figure 13

VEHICLE CONTROL MODULE

See Figure 14.

Controls electrical components of the machine.

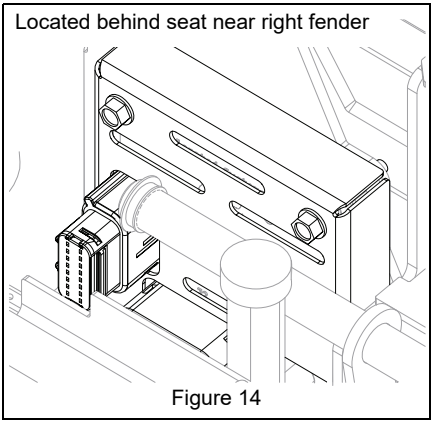

Figure 14

HEIGHT-OF-CUT ADJUSTMENT SYSTEM

Sets the height of cut.

HIGH / LOW SPEED SWITCH

WARNING: AVOID INJURY. Keep setting at low speed until you learn how to operate the unit.

See Figure 15.

Controls maximum drive speed:

- High speed position: 17.7 kph (11 mph) drive speed.
- Low speed position: 12.9 kph (8 mph) drive speed.

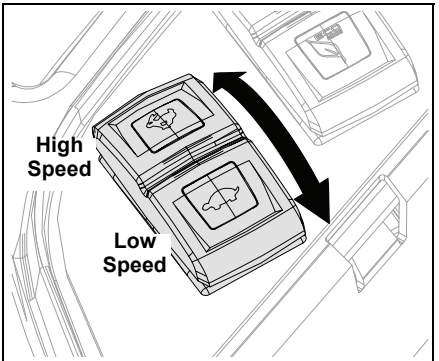

Figure 15

ECO MODE SWITCH

See Figure 16.

Helps reduce power consumption when placed in Eco Mode.

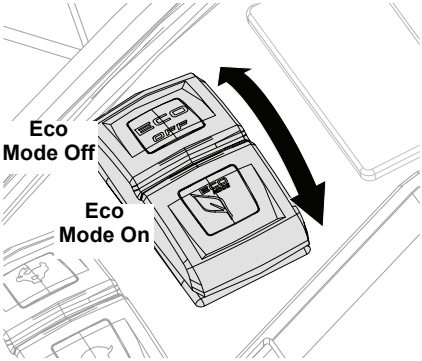

Figure 16

BATTERY BUSBAR

See Figure 17.

NOTICE: AVOID DAMAGE! Batteries must be carefully inserted vertically into busbar with battery connection pins facing the center of the machine. DO NOT drag batteries across busbar fins to position.

Connects batteries to electrical system.

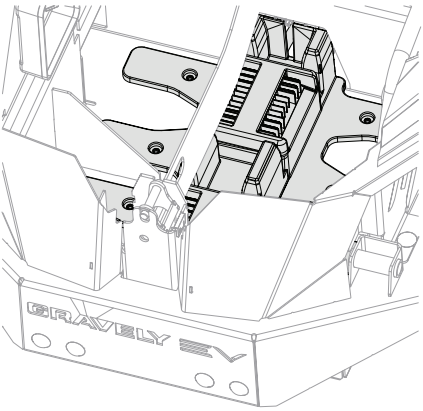

Figure 17

TRANSPORT LOCK RELEASE LEVER

See Figure 18.

Releases deck from transport lock position.

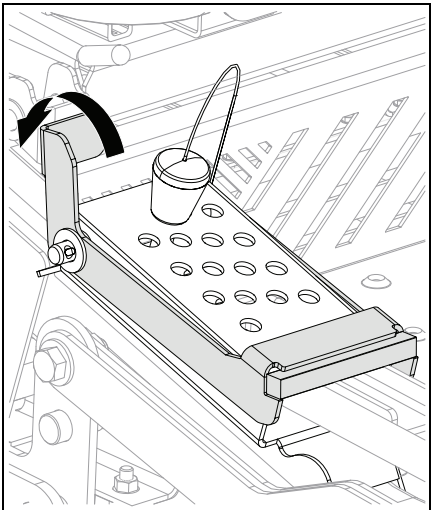

Figure 18

EMI FILTER

See Figure 19.

Reduces electromagnetic noise that may cause interference with electrical devices.

IMPORTANT: EMI filters must be used with all chargers.

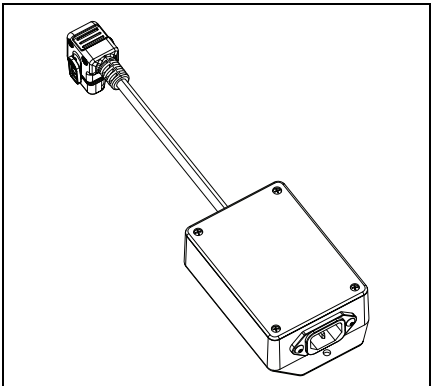

Figure 19

110VPOWER CORD

See Figure 20.

Provides 110V of power to main electrical supply.

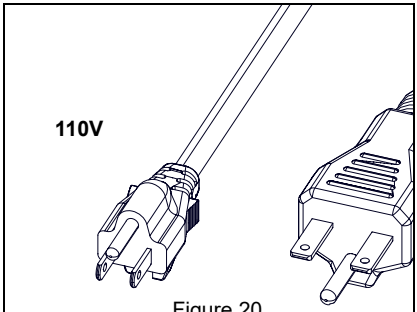

Figure 20

DECK LIFT PEDAL

Raises mower deck to change height-of-cut setting.

SEAT ADJUSTMENT LEVER

Unlocks seat to allow operator to move seat forward or backward and then lock in desired position.

ROLLOVER PROTECTION STRUCTURE (ROPS)

Helps protect operator that is wearing their seatbelt in the event of a rollover. DO NOT wear seatbelt when operating with ROPS in the lowered position.

SAFETY INTERLOCK SYSTEM

Monitors the interaction of various unit features for operator safety.

STEERING LEVERS

Control the direction and speed of unit. To stop unit, return both steering levers to neutral position.

ANTI-SCALP WHEELS

Help prevent the deck from contacting the ground and scalping the lawn when passing over a high spot.

PARKING BRAKE SWITCH

See Figure 21.

Controls the parking brake.

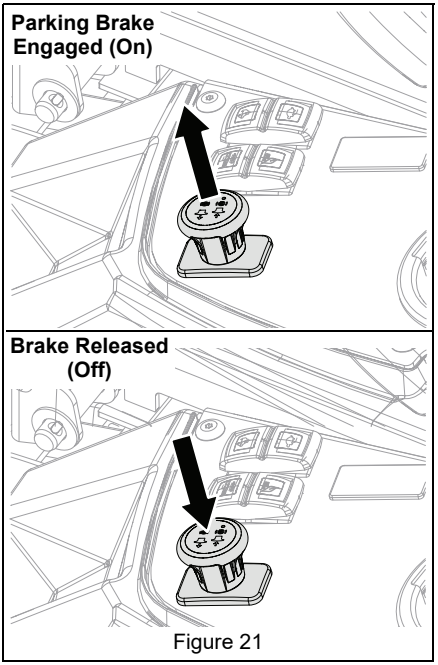

Figure 21

BYPASS HANDLE

Releases brake on wheel motors so unit may be moved with the system off.

RIDE ADJUSTMENT KNOB

Adjusts seat for operator comfort.

BACKREST ADJUSTMENT LEVER

Controls backrest angle for operator comfort.

ARMREST ANGLE ADJUSTMENT KNOBS

Set armrest angle for operator comfort.

BUSBAR COVER

Prevents grass, debris and moisture build-up on busbar terminals. See Figure 22.

NOTICE: AVOID DAMAGE. Always install busbar cover when two batteries are installed in the machine.

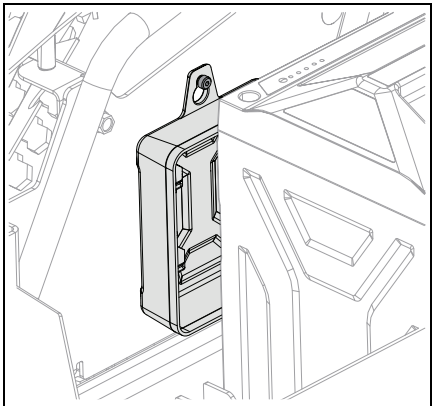

Figure 22

DECK MOTORS

Rotates blades and monitors blade speed and motor temperature.

DECK CONTROLLERS

Control deck motors.

TRACTION DRIVE MOTORS

Rotates wheels and monitors wheel speed and motor temperature.

TRACTION DRIVE CONTROLLERS

Control traction drive motors and driveability of vehicle.

AUDIBLE ALARM

See Figure 23.

Notifies operator of certain operating conditions and helps prevent accidental movement of the machine.

The audible alarm beeps under the following conditions:

- When key switch is turned to the run position (1 beep).

IMPORTANT: Reference *Digital Display* on page 20 for display function details.

- When Live-to-Drive feature is activated (2 beeps).
- When Live-to-Drive feature is deactivated (1 beep).
- When a vehicle fault occurs (1 beep).

The audible alarm beeps when the following conditions exist for 5 seconds:

- When key switch is turned to the on position and operator is not seated (continues to beep every 5 seconds until conditions no longer exist).
- When Live-to-Drive feature is activated, parking brake is off, vehicle is not moving, and steering arms are in neutral (continues to beep every 5 seconds until conditions no longer exist).

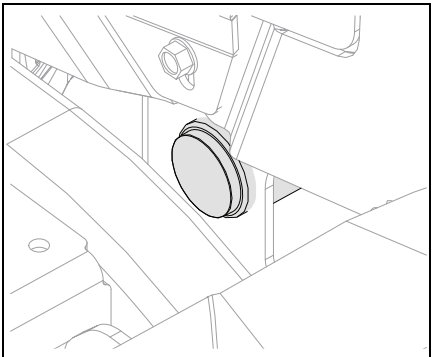

Figure 23

DIGITAL DISPLAY

Side Bar Navigation

See *Side Bar Navigation* on page 21.



Home Screen

See *Home Screen* on page 21.

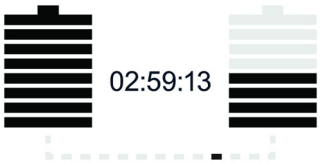

Balance Screen

See *Balance Screen* on page 24.

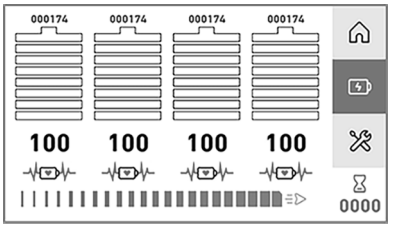

Power Screen

See *Power Screen* on page 22.

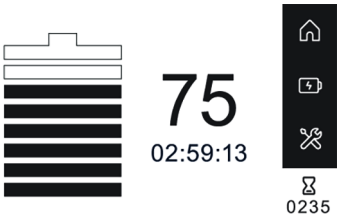

Charge Screen

See *Charge Screen* on page 23.

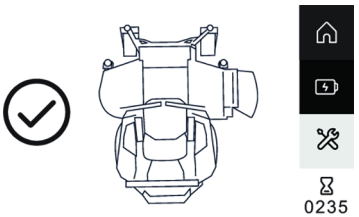

Maintenance Screen

See *Maintenance Screen* on page 23.

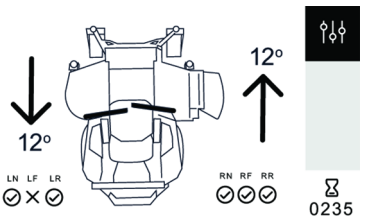

Steering Sensor Calibration Screen

See *Steering Sensor Calibration Screen* on page 24.

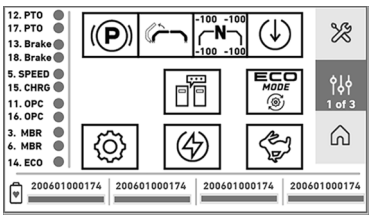

Diagnostic Screen

See *Diagnostic Screen* on page 25.

Figure 24

SIDE BAR NAVIGATION

Displays when key switch is turned to the on position.

Icon	Meaning	Description	Color Code(s)
	Home Screen	See *Home Screen* on page 21.	*Blue:* Default color when operator navigates to home screen.
	Power Screen	See *Power Screen* on page 22.	*Blue:* Default color when operator navigates to home screen.
	Maintenance Screen	See *Maintenance Screen* on page 23.	*Red:* Maintenance or repair required and / or fault is present. *Blue:* Default color when operator navigates to maintenance screen and unit is clear of faults.
	Hour Meter	Measures and displays unit runtime when Live-to-Drive feature is activated.	N/A

HOME SCREEN

Displays when key switch is turned to the on position.

Icon	Meaning	Description	Color Code(s)
	State of Charge (SOC)	Battery SOC – 12.5% increments.	*Light Green / Blue:* 100% – 38% *Yellow / Orange:* 37% – 13% *Red:* 12% – 0%
100	Percentage Digital Readout	Average SOC of active batteries – 1% increments.	N/A
	Battery Recognition	Number of batteries properly mounted in machine.	*Black:* Batteries are discharging. *White with Black Outline:* Batteries are properly installed but not active. *White with Grey Outline:* Batteries are not installed. *White with Red Outline:* Battery recognition fault.
	Live-to-Drive	Notifies operator when machine is ready to drive. The following conditions must exist for Live-to-Drive feature to be activated: • Key switch in the on position. • Parking brake engaged. • Operator presence control switch engaged (operator seated). • Steering levers in neutral position. • Hood assembly closed and securely latched.	*White:* Live-to-Drive feature not activated. *Blue:* Live-to-Drive feature activated (ready to drive). *Red:* Live-to-Drive fault.

Icon	Meaning	Description	Color Code(s)
	Blades	PTO switch status.	*White:* PTO switch disengaged (blades off). *Blue:* PTO switch engaged (blades on). *Yellow:* PTO switch is engaged when machine is turned on. Cycle PTO switch to engage deck. *Red:* Blade status fault. *Green:* PTO switch engaged (blades on) and are in Eco Mode.
	Parking Brake	Parking brake switch status.	*White:* Parking brake engaged. *Blue:* Parking brake disengaged. *Red:* Parking brake fault.
	Low Battery	Battery SOC status.	*White:* SOC above 12%. *Red:* SOC below 12%.

POWER SCREEN

Displays when key switch is turned to the on position and operator navigates to the power screen.

IMPORTANT: See *Check SOC* on page 37 to check battery SOC. For battery charging details, see *Charge Batteries* on page 37.

Icon	Meaning	Description	Color Code(s)
	State of Charge (SOC)	Battery SOC – 12.5% increments.	*Light Green / Blue:* 100% – 38% *Yellow / Orange:* 37% – 13% *Red:* 12% – 0%
100	Percentage Digital Readout	Average SOC of active batteries – 1% increments.	N/A
	Power Bar Status	Available power – 25% increments.	N/A
	Battery State of Health	Battery state of health is less than 66%. See *Warnings* on page 47.	N/A

MAINTENANCE SCREEN

Displays when key switch is turned to the on position and operator navigates to the maintenance screen.

IMPORTANT: See *Warnings* on page 47 for digital readout warning codes. For fault codes, contact an authorized Gravely EV dealer.

Icon	Meaning	Description	Color Code(s)
	Fault Icon & Temporary Warning Icon	Notifies operator of fault / warning location. See *Check Faults / Warnings* on page 34.	*Red*: Fault notification. *Yellow*: Warning notification.
54004	Fault / Warning Digital Readout	Five digit number indicating the fault / warning that occurred.	N/A
	No Faults or Warnings	Machine is clear of faults / warnings.	N/A
	Temperature Icon	Motors and / or controllers are overheating. See *Troubleshooting* on page 50.	N/A

CHARGE SCREEN

Displays when operator connects battery charger to charge port.

IMPORTANT: See *Check SOC* on page 37 to check battery SOC. For battery charging details, see *Charge Batteries* on page 37.

Icon	Meaning	Description	Color Code(s)
	State of Charge (SOC)	Battery SOC – 12.5% increments.	*Light Green / Blue:* 100% – 38% *Yellow / Orange:* 37% – 13% *Red:* 12% – 0%
100	Percentage Digital Readout	Average SOC of active batteries – 1% increments.	N/A
02:59:13	Charge Time	Time remaining until batteries are fully charged.	N/A

BALANCE SCREEN

Displays when:

a. Key switch is in the off position.
b. Hood assembly is closed.
c. Return seat to operating position.
d. Two or more batteries have at least a 12% difference in SOC.

IMPORTANT: To check battery balance, see *Check Battery Balance* on page 36. For battery balancing details, see *Auto-Balance Feature* on page 37.

Icon	Meaning	Description	Color Code(s)
	State of Charge (SOC)	Battery SOC – 12.5% increments.	*Light Green / Blue:* 100% – 38% *Yellow / Orange:* 37% – 13% *Red:* 12% – 0%
02:59:13	Balance Time	Time remaining until machine is fully operational with two balanced batteries.	N/A

STEERING SENSOR CALIBRATION SCREEN

Displays when operator holds display switch down for 7 seconds while on the maintenance screen.

IMPORTANT: See *Steering Sensor Calibration Sequence* on page 42 for steering sensor calibration sequence.

Icon	Meaning	Description	Color Code(s) / Additional Icons
	Complete	Step is complete.	Example: LN LF LR  RN RF RR 
	Left / Right Arrow	Instructs operator of proper steering sensor direction / position during calibration sequence.	N/A
	Not Complete	Step is not complete.	Example: LN LF LR  RN RF RR 
	Loading	Entering sensor calibration sequence and save calibration step.	N/A
	Neutral Calibration	Neutral position is being calibrated.	N/A
	Save Calibration	Allows user to save parameters in each steering sensor when calibration is complete.	N/A
	Cancel Calibration	Allows user to cancel calibration.	N/A

DIAGNOSTIC SCREEN

Displays when operator holds display switch up for 7 seconds while on the maintenance screen.

Icon	Meaning	Description	Color Code(s)
	Parking Brake	Parking brake switch status.	*White:* Parking brake engaged. *Blue:* Parking brake disengaged. *Red:* Parking brake fault.
	Operator Presence Control Seat Switch	Operator presence control (seat switch) status.	*White:* Operator presence control switch disengaged (operator not seated). *Blue:* Operator presence control switch engaged (operator seated).
	Neutral Position	Displays status of steering lever position including drive speed percentage (top) and steering angle percentage (bottom).	*White:* Steering levers out of neutral. *Blue:* Steering levers in neutral and / or Live-to-Drive is activated.
	Live-to-Drive	Notifies operator when machine is ready to drive. The following conditions must exist for Live-to-Drive feature to be activated: • Key switch in the on position. • Parking brake engaged. • Operator presence control switch engaged (operator seated). • Steering levers in neutral position. • Hood assembly closed and securely latched.	*White:* Live-to-Drive feature not activated. *Blue:* Live-to-Drive feature activated.
	Communication Icon	Monitors component communication. See *Troubleshooting* on page 50.	*White:* Electrical system components are not communicating. *Blue:* Electrical system components are communicating.
	Eco Mode	Helps reduce power consumption when Eco Mode switch is activated.	*White:* Eco Mode switch not activated. *Blue:* Eco Mode switch activated.
	PTO Input	PTO switch status.	*White:* PTO switch disengaged. *Blue:* PTO switch engaged.
	Charge Input	Charger status.	*White:* Charger not plugged in. *Blue:* Charger plugged in.
	Speed Input	Drive speed status.	*White:* Slow speed. *Blue:* Fast speed.

	Navigation Icon	Allows user to navigate to the Fault History Screen and Part Number Screen. See *Fault History Screen* on page 27 and *Part Number Screen* on page 27.	N/A
Battery Serial and State of Health Status Bar 		Battery serial number and state of health. Consider replacing batteries when status bar turns yellow (see *Accessories* on page 53).	*Blue:* 100% - 65% *Yellow:* 64% - 0%

Icon	Meaning	Description	Color Code(s)
VCM Inputs			
12. PTO 17. PTO	 Blue On Black Off	PTO switch status.	PTO switch engaged.
12. PTO 17. PTO	 Black Off Blue On	PTO switch status.	PTO switch disengaged.
13. Brake 18. Brake	 Blue On Black Off	Parking brake switch status.	Parking brake engaged.
13. Brake 18. Brake	 Black Off Blue On	Parking brake switch status.	Parking brake disengaged.
5. SPEED		Drive speed status.	*Blue:* Fast speed. *Black:* Slow speed.
15. CHRG		Charger status.	*Blue:* Charger plugged in. *Black:* Charger not plugged in.
11. OPC 16. OPC	 Blue On Black Off	Operator presence control switch status.	*Both Blue:* Operator presence control switch engaged (operator seated). *Both Black:* Operator presence control switch disengaged (operator not seated).
3. MBR 6. MBR		Manual brake release. Feature is not available on this machine.	N/A
14. ECO		Eco Mode switch status.	*Blue:* Eco Mode switch activated. *Black:* Eco Mode switch not activated.

FAULT HISTORY SCREEN

Displays fault code and system hours at time of fault. Fault history displays most recent fault information on line 1.

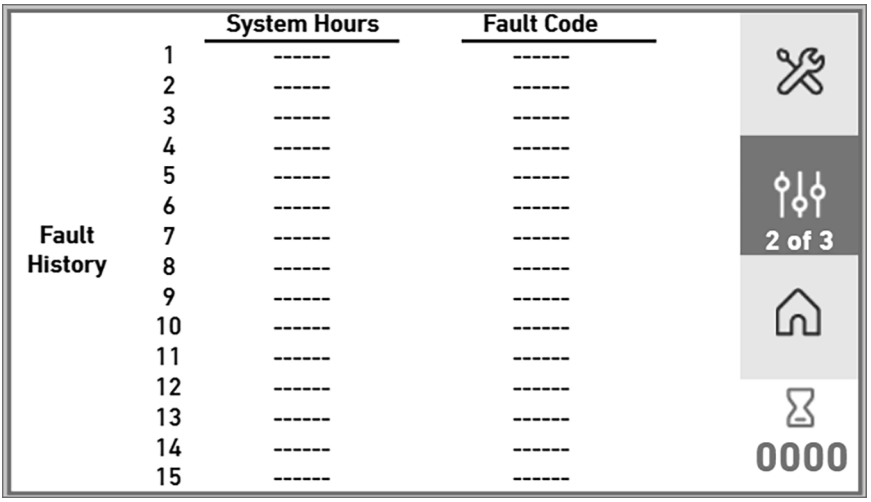

PART NUMBER SCREEN

Displays serial number and part number of vehicle communication components.

Components:

- VCM: Vehicle Control Module.
- DCR, DCL, DCC: Deck Controller (Right, Left, Center).
- TCR, TCL: Traction Controller (Right, Left).
- BAT 1, BAT 2, BAT 3, BAT 4: Battery (1, 2, 3, 4).

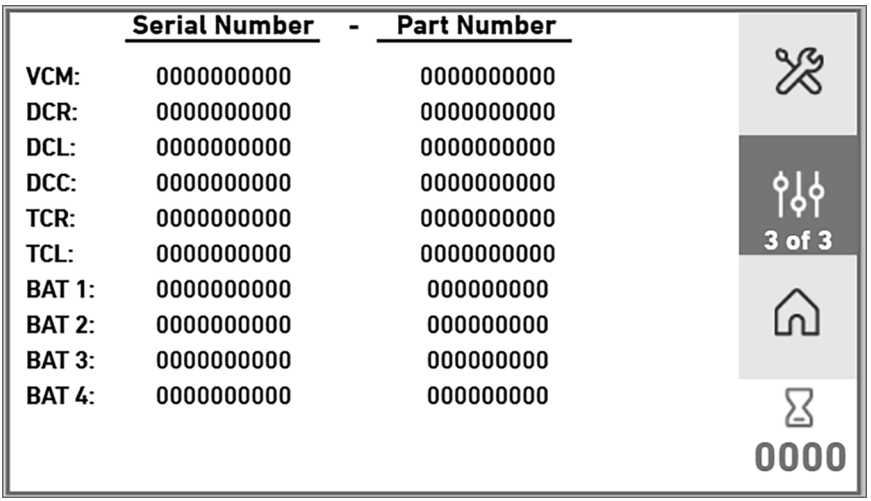

OPERATION

WARNING: AVOID INJURY. Read and understand the *Safety* section before proceeding.

IMPORTANT: All references to left, right, front or rear are given from the perspective of operator in operator's position, facing the direction of forward travel.

EMERGENCY STOPPING

1. Move steering levers to neutral position.
2. Engage parking brake.
3. Push PTO knob down to off position.
4. Turn key switch to off position and remove key.

BEFORE OPERATING UNIT

IMPORTANT: Register your product! See *Register Your Product!* on page 1.

1. Check function of the Safety Interlock System by performing the tests in *Check Safety Interlock System* on page 33. Contact an authorized Gravely EV dealer for repair if any of the tests fail.
2. Check battery SOC and charge batteries if necessary. See *Check SOC* on page 37.
3. Ensure seat is in the operating position.
4. Ensure batteries are properly installed in the machine. See *Install Batteries* on page 39.
5. Ensure hood assembly is closed and handle is securely latched. See Figure 25.

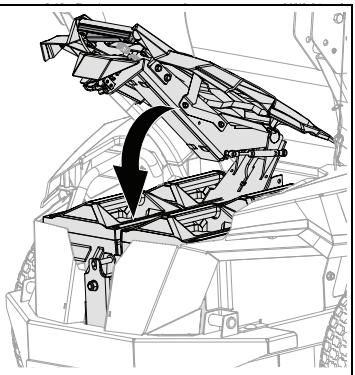

Figure 25

6. Check battery balance. See *Check Battery Balance* on page 36.
7. Set cutting height. See Figure 26.
   a. Push mower lift pedal forward until transport lock engages.
   b. Insert height adjustment pin through desired setting in height-of-cut adjustment system.
   c. Push mower lift pedal slightly forward, release transport lock and slowly release pedal until it contacts adjustment pin and stops.

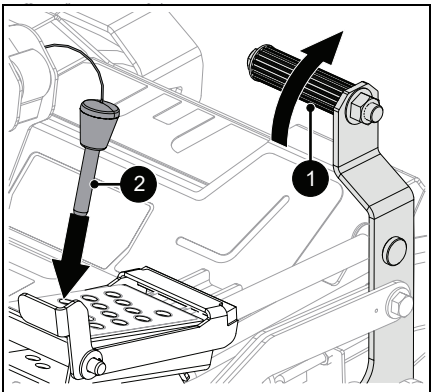

1. Deck Lift Pedal
2. Height-of-Cut Adjustment System

Figure 26

POSITION ROPS

IMPORTANT: Inspect ROPS and seatbelt for damage and loose or missing hardware.

Raise Center Bar

See Figure 27.

1. Remove hairpins from lock pins and remove lock pins from hinge plate.
2. Raise center bar and secure with lock pins and hairpins.

WARNING: AVOID INJURY. Seatbelt MUST be worn when operating with center bar raised.

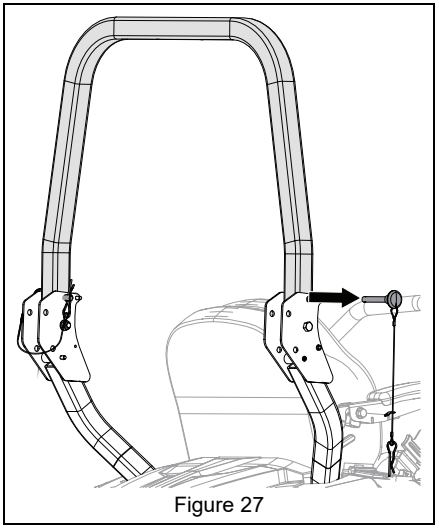

Figure 27

Lower Center Bar

See Figure 28.

WARNING: AVOID INJURY. Lower the center bar only when needed to drive under an object. There is no rollover protection with the center bar in the lowered position. DO NOT wear seatbelt when ROPS is in lowered position.

1. Remove hairpins from lock pins and remove lock pins from hinge plate.
2. Lower center bar and secure with lock pins and hairpins.

IMPORTANT: Return center bar to the raised position when clear of obstacles.

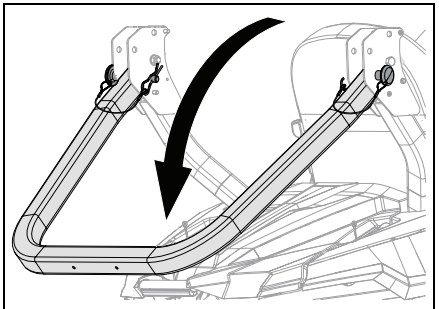

Figure 28

START THE SYSTEM

1. Push PTO knob down to off position.
2. Move steering levers to neutral position.
3. Engage parking brake.
4. Insert key switch and turn to the on position.

OPERATE UNIT

1. Activate Live-to-Drive feature. See *Home Screen* on page 21.
2. Release parking brake.
3. Pull PTO knob up to on position.

NOTICE: Never engage the PTO if the mower is plugged with grass or other material. This may cause damage to the motors.

WARNING: AVOID INJURY. Move the steering levers slowly and keep the mower at slow speed until you learn how to operate the unit.

4. Move steering levers to begin mowing.

Direction of Travel	Lever Position
Forward	Push both levers forward from neutral position.
Reverse	Pull both levers backward from neutral position.
Right Turn	Push left lever farther forward than the right lever.
Left Turn	Push right lever farther forward than the left lever.
Stop	Return both levers to neutral position.

NOTICE: Aggressive turning can scuff or damage lawns. Always keep both wheels rotating when making sharp turns. DO NOT make turns with inside wheel completely stopped. For minimum turning radius, slowly reverse inside wheel while moving outside wheel slowly forward.

For Best Mowing Results

- Cut grass when it is dry.
- Keep mower blades sharp.
- Keep mower deck properly leveled.
- Do not set height of cut too low. For very tall grass, mow twice.
- Do not travel too fast.
- Set high / low speed switch to slow speed when Eco Mode feature is activated.
- When mulching, only remove 1/3 of grass length per cutting. Do not cut more than 2.5 cm (1") at any one time.
- Discharge clippings into areas already cut.
- Vary cutting pattern with each mowing.
- Do not allow grass or debris to collect inside of mower deck. Clean after each use.

STOP THE UNIT

WARNING: AVOID INJURY. Wait for all moving parts to stop before leaving operator's position.

1. Move steering levers to neutral position.
2. Engage parking brake.
3. Push PTO knob down to off position.
4. Turn key switch to off position and remove key.

MOVE UNIT MANUALLY

Bypass electric brakes to move unit with system off.

1. Remove key and wait for moving parts to stop and for hot parts to cool.
2. Rotate footplate rearward until it locks into place. See Figure 29.

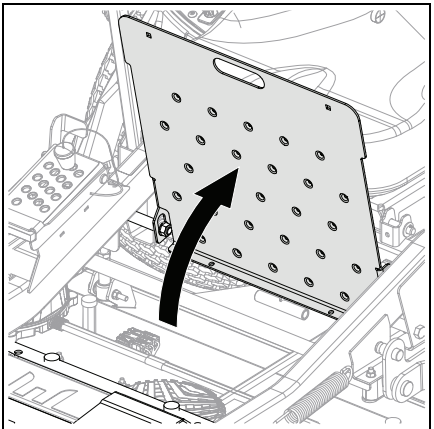

Figure 29

3. Pull bypass handle and secure notch to footplate ledge. See Figure 30.
4. Push unit to desired location.
5. To return footplate to operating position, lift up on footplate and lower to close (or) remove handle from footplate to close.

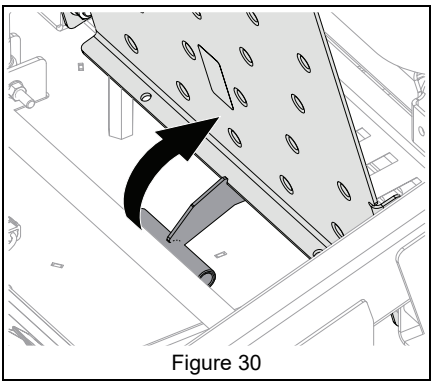

Figure 30

TRANSPORT UNIT

1. Push deck lift pedal completely forward to engage transport lock. Release pedal.
2. Move unit to transport vehicle.
3. Engage parking brake and remove key.
4. Secure mower frame to transport vehicle.

NOTICE: NEVER secure unit to vehicle from rods or linkages that could be damaged.

RELEASE TRANSPORT LOCK

1. Push deck lift pedal forward and lift transport lock release lever.
2. Slowly return mower lift pedal to resting position.

ACTIVATE ECO MODE

1. Set Eco Mode switch to the on position.
2. Set high / low speed switch to slow speed.

MAINTENANCE

WARNING: AVOID INJURY. Read and understand the *Safety* section before proceeding.

An authorized Gravely EV dealer can provide service and adjustments to keep your unit operating at peak efficiency.

MAINTENANCE SCHEDULE

NOTICE: DO NOT clean unit with water. To avoid damage to electrical components and motors, clean unit with compressed air or a dry cloth.

Service Performed	Each Use	Every 25 hrs.	Every 50 hrs.	Every 100 hrs.	Every 250 hrs.	Every 500 hrs.
Clean Grass and Debris from Top and Underside of Deck	•					
Clean Debris from Under Fenders	•					
Clean Charge Port and USB Port	•					
Clean Seat Mount Area (Both Sides)	•					
Clean Battery Busbar	•					
Clean Battery Terminals	•					
Inspect Wiring, and Wire Harnesses	•					
Inspect Batteries and Busbar Interfaces for Damage	•					
Clean Traction Drive Motor Bay	•					
Change Gearcase Oil *					•	•
Check Safety Interlock System	•					
Check Parking Brake			•			
Check Tire Pressure	•					
Check Mower Blades		•				
Clean Charge Port	•					
Clean Caster Fork Bearings						•
Lubricate Caster Wheel Bearings						•
Check Battery SOC	•					
Check Fasteners				•		
Lubricate Unit			•			

* Change gearcase oil after first 250 hours of operation and every 500 hours thereafter. Contact an authorized Gravely EV dealer.

SERVICE PARTS

Contact an authorized Gravely EV dealer to purchase service parts for your unit.

Description	Qty.	Part No.
110V Power Cord	1	09199600
220V Power Cord	1	09199800
Charge Diode	1	30146900
USB Fuse	1	21200004
Buzzer Fuse	1	21200005
Lights Fuse	1	21200001
Main Fuse	1	21200002
Display Fuse	1	21200004
Terminating Resistor	2	09479200
Hood Release Cable	1	06900730
80W-140 Synthetic Gear Oil	1	00981400
Left / Center Mower Blade (Models 997008, 997014)	2	09440000
Left / Center Mower Blade (Models 997009, 997015)	2	09439700
Left / Center Mower Blade (Models 997010, 997016)	2	09182100
Right Mower Blade (Models 997008, 997014)	1	09466700
Right Mower Blade (Models 997009, 997015)	1	09466600
Right Mower Blade (Models 997010, 997016)	1	09196400
Mower Blade (Models 997005, 997011)	3	09440000
Mower Blade (Models 997006, 997012)	3	09439700
Mower Blade (Models 997007, 997013)	3	09182100

CHECK MOWER BLADES

Check blades for wear. Replace or sharpen as needed.

CAUTION: AVOID INJURY. Use sturdy gloves or padding to protect hands when working with mower blades.
Rotation of one blade rotates the other blades.

Remove Blades

1. Remove key and wait for moving parts to stop and for hot parts to cool.
2. Remove all batteries from mower.
3. Chock wheel. Strap and clamp unit onto lift, if used.

IMPORTANT: Right blade on rear-discharge decks is retained with a left-hand thread bolt.

An impact wrench is required to remove blade bolts.

See Figure 31.

4. Remove blade assembly:
   - *Models 997005, 997006, 997007, 997011, 997012, 997013 only (side-discharge):* Turn hex bolts counter-clockwise to loosen. Remove hardware, blades, and lower spindle guard. Sharpen or discard blades and retain hardware and lower spindle guard.
   - *Models 997008, 997009, 997010, 997014, 997015, 997016 only (rear-discharge):* To loosen, turn hex bolts counter-clockwise for left and center blades and clockwise for right blade. Remove hardware, blades, and lower spindle guard. Sharpen or discard blades and retain hardware and lower spindle guard.

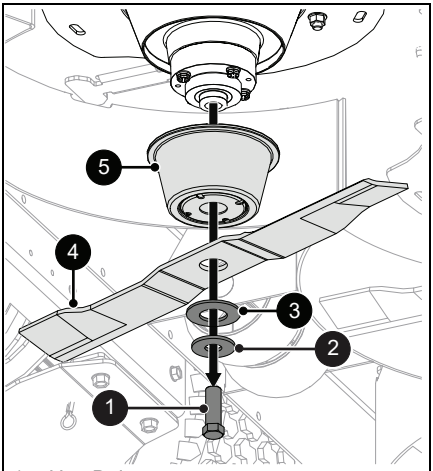

1. Hex Bolt
2. Flat Washer
3. Belleville Washer
4. Mower Blade
5. Lower Spindle Guard

Figure 31

Sharpen Blades

CAUTION: DO NOT sharpen blades while attached to unit.

1. Remove blades. Discard blades if:
   - More than 1.3 cm (1/2") of metal is removed.
   - Air lifts are eroded.
   - Blades are bent or broken.

2. File or grind an equal amount of metal from each cutting edge of the blade until sharp. DO NOT change angle of cutting edge or round the corner of the blade. See Figure 32.

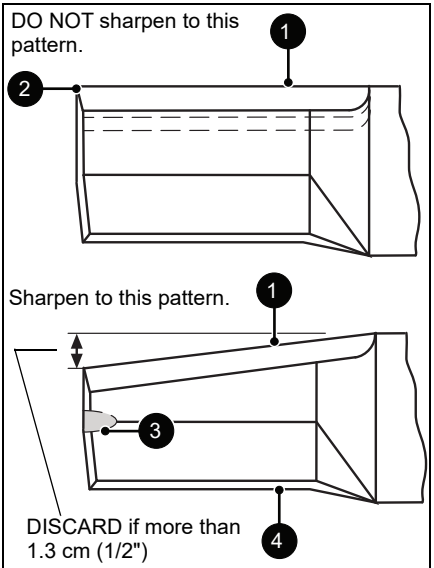

1. Cutting Edge
2. Square Corner
3. Air Lift Erosion
4. Air Lift

Figure 32

CAUTION: Unbalanced blades cause excessive vibration and eventual damage to unit. Balance blades before reinstalling on unit. NEVER weld or straighten blades.

3. Check blade balance by sliding an unthreaded bolt through center hole. Hold the bolt level. If blade does not remain horizontal, sharpen the heavy end until blade is balanced.

Install Blades

See Figure 31.

CAUTION: Mating surfaces between spindle, lower spindle guard, blade and washer MUST be free of debris to ensure correct tightness and alignment.

1. Secure lower spindle guards and blades to spindles using hardware removed earlier.
   - *Models 997005, 997006, 997007, 997011, 997012, 997013 only:* Turn hex bolts clockwise to tighten.
   - *Models 997008, 997009, 997010, 997014, 997015, 997016 only:* To tighten, turn hex bolts clockwise for left and center blades and counter-clockwise for right blade.
2. Hand tighten assembly to verify all components are centered.
3. Torque bolts to 156 N•m – 217 N•m (115 lb-ft – 160 lb-ft).

CHECK SAFETY INTERLOCK SYSTEM

Check function of the Safety Interlock System by performing the tests below. Contact an authorized Gravely EV dealer for repair if any of the tests fail.

The unit should not start when the following conditions exist:

- Key switch is turned to the on position, hood assembly is open or seat is in raised position.

The Live-to-Drive feature should activate (see *Home Screen* on page 21) when all of the following conditions exist:

IMPORTANT: Charger must be disconnected.

- Parking brake is engaged.
- Operator presence control switch is engaged (operator in seat).
- Steering levers are in neutral position.
- Hood assembly is closed.
- Ensure seat is in the operating position.

CHANGE GEARCASE OIL

CAUTION: Use of alternate gear oils could result in premature wear of gearcase components and will void the gearcase warranty.

1. Operate unit for a few minutes to warm gearcase oil.
2. Remove key and wait for all moving parts to stop and for hot parts to cool.
3. Chock front wheels and support unit so both drive wheels are off the ground.
4. Position supports such as blocks or jack stands under the frame.
5. Remove drive wheel. See Figure 33.

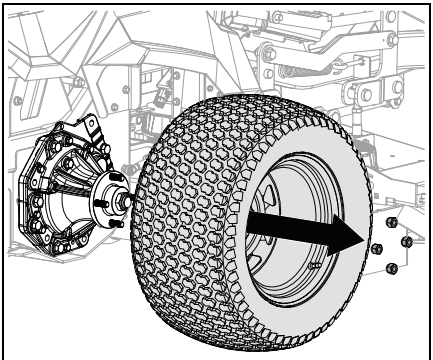

Figure 33

6. Position container under drain plug to catch used oil.

See Figure 34.

7. Remove drain plug from gearcase and allow oil to drain. Retain drain plug for reinstallation.
8. Wipe drain plug and mounting surface clean.
9. Remove oil fill plug for proper ventilation.

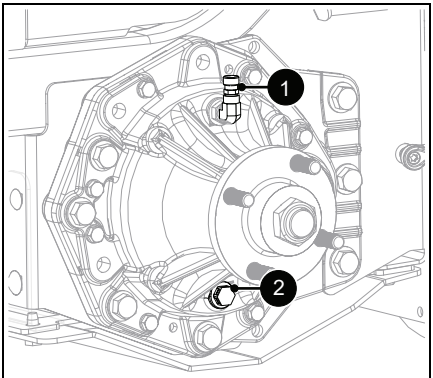

1. Oil Fill Plug
2. Oil Drain Plug

Figure 34

10. Reinstall oil drain plug. Torque to 16.2 N•m – 19.8 N•m (143 in-lbs – 175 in-lbs).
11. Fill gearcase with 200 mL of 80W-140 synthetic gear oil (Gravely p/n 00981400).
12. Reinstall oil fill plug. Torque to 16.2 N•m – 19.8 N•m (143 in-lbs – 175 in-lbs).
13. Repeat steps 6 – 12 for other transaxle.
14. Reinstall wheel assemblies. Torque wheel lug nuts to 81.3 N•m – 122.0 N•m (60 lb-ft – 90 lb-ft).
15. Remove unit from jack stands and remove wheel chocks.

CHECK FAULTS / WARNINGS

To determine if a fault / warning is present:

1. Activate Live-to-Drive feature. See *Home Screen* on page 21.
2. Navigate to the maintenance screen on the digital display (see *Maintenance Screen* on page 23). If a fault or warning code is present, see *Fault / Warning Code Index* on page 46.

Fault / Warning Locations

Location of issue causing fault / warning notification (see Figure 35):

- VCM = Center
- Battery = Rear
- Deck Controller = Left / Right / Center Deck
- Deck Motor = Left / Right / Center Deck
- Traction Controller = Left / Right Wheel
- Traction Motor = Left / Right Wheel
- Steering Sensors = Center

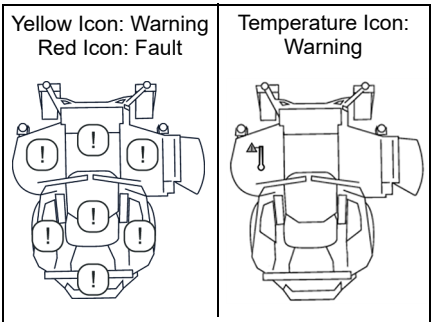

Figure 35

BATTERY ACCESS

1. Remove key and wait for moving parts to stop and for hot parts to cool.
2. Open hood assembly. See Figure 36.

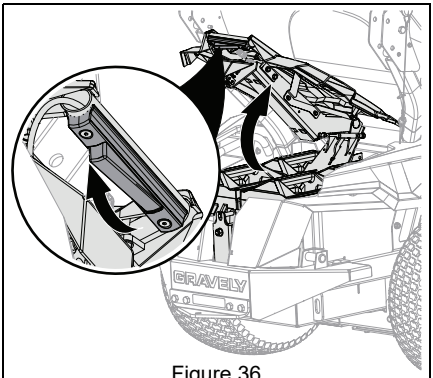

Figure 36

CHECK PARKING BRAKE

1. Engage parking brake.
2. Remove key and wait for moving parts to stop and for hot parts to cool.
3. Push unit forward.
   - If unit does not move forward, no further action is needed.
   - If unit easily moves forward, contact an authorized Gravely EV dealer.

CHECK TIRE PRESSURE

See *Specifications* on page 54 for recommended tire pressure.

WARNING: AVOID INJURY. Explosive separation of tire and rim parts is possible.

- DO NOT inflate tires above the recommended pressure.
- DO NOT inflate tires with a compressor; use a hand pump.
- DO NOT stand in front of tire assembly when inflating. Use a clip-on chuck and extension hose long enough to allow you to stand to one side.

CHECK FASTENERS

Check for loose or missing hardware.

LUBRICATE UNIT

Lubricate Seat

See Figure 37.

1. Remove key and wait for moving parts to stop and for hot parts to cool.
2. Move steering levers outward.
3. Remove batteries.
4. Lift seat latch lever.
5. Rotate seat forward.

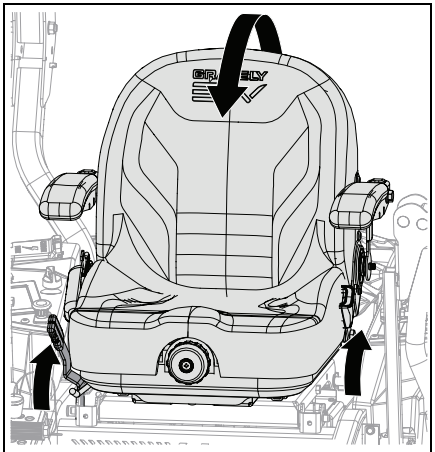

Figure 37

6. Apply grease to seat tracks through slots under seat plate. See Figure 38.

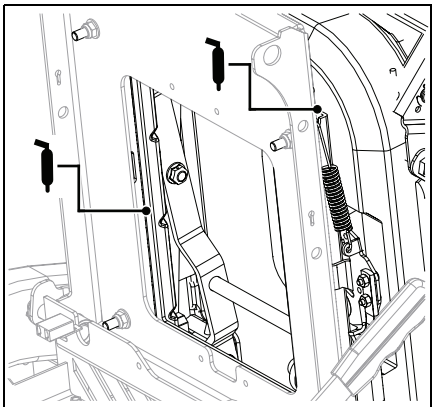

Figure 38

7. Return seat to operating position and slide seat back and forth to spread grease along tracks.

Lubricate Caster Fork Bearings

See Figure 39.

1. Place steering levers in neutral position and engage parking brake.
2. Remove key and wait for all moving parts to stop and for hot parts to cool.
3. Remove dust cap.
4. Pump grease into fitting until grease appears at the top of the upper bearing.

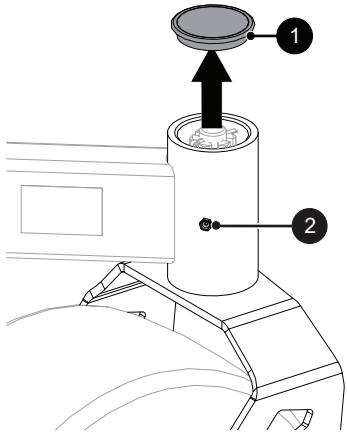

1. Dust Cap
2. Grease Fitting

Figure 39

5. Reinstall dust cap.
6. Repeat process on opposite side of unit.

CHECK BATTERY BALANCE

IMPORTANT: If multiple batteries are installed in the machine, they must be within 12% SOC to operate together.

1. Remove key and wait for moving parts to stop and for hot parts to cool.
2. Ensure batteries are installed in the machine. See *Install Batteries* on page 39.

IMPORTANT: If battery balancing is required, see *Auto-Balance Feature* on page 37.

AUTO-BALANCE FEATURE

Auto-balance feature occurs under the following conditions:

- Key switch is in the off position.
- Hood assembly is closed.
- Two or more batteries have at least a 12% difference in SOC.
- Ensure seat is in the operating position.

IMPORTANT: If battery charge levels vary significantly, connect a battery charger. The charger will always charge low SOC batteries first. See *Charge Batteries* on page 37.

Fast Balance Feature

The fast balance feature balances two batteries at a time that are within 30% SOC. Slow balancing will occur after fast balancing is complete. Refer to the digital display for remaining balance time.

Slow Balance Feature

The slow balance feature operates on all batteries in the system. Batteries must have at least a 12% difference in SOC for slow balancing to occur.

CHECK SOC

To check battery SOC, refer to the digital display with key switch turned on or check battery LED lights. See *Check Battery LED Lights* and *Charging Status* on page 37.

Check Battery LED Lights

See Figure 40.

IMPORTANT: Battery LED lights indicate battery SOC in 20% increments and automatically turn on when batteries are charging.

1. Open hood assembly. See *Battery Access* on page 35.
2. Press and hold SOC indicator button until LED lights display. See *Charging Status* on page 37 to determine if batteries require charging.

NOTICE: If battery fault exists, battery fault indicator will replace charge status with fault code. Open hood, remove batteries, and reinstall batteries. If fault persists, contact an authorized Gravely EV dealer. Charge status will return when fault is cleared. See *Fault / Warning Code Index* on page 46.

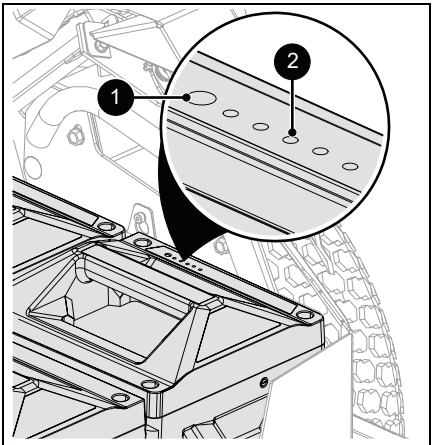

1. SOC Indicator Button
2. LED Display

Figure 40

Charging Status

LED display should blink and then transition to a solid color within SOC range indicated below. Once charger is removed, LED display will turn off.

Charging Status	SOC
1 LED Light	0% – 20%
2 LED Lights	20% – 40%
3 LED Lights	40% – 60%
4 LED Lights	60% – 80%
5 LED Lights	80% – 99%
5 LED Lights *	100%
* Displays for one minute after charge completion and then shuts off.	

CHARGE BATTERIES

IMPORTANT: AriensCo recommends changing all four batteries at the same time and replacing all batteries with batteries at the same state of charge. Failure to change batteries at the same state of charge may require batteries to auto balance in the machine.

IMPORTANT: Follow the recommended battery charging temperatures. DO NOT charge batteries in temperatures lower than 3° C (37° F) or above 40° C (104° F).

NOTICE: ALWAYS disconnect charger before trailering unit.

1. Engage parking brake and place steering levers in neutral position.

2. Ensure hood and seat are in the operating position.
3. Remove key and wait for moving parts to stop and for hot parts to cool.
4. Lift charge port cover and move charge port cap to the side.
5. Connect charger connector to charging port on the machine. See Figure 41.

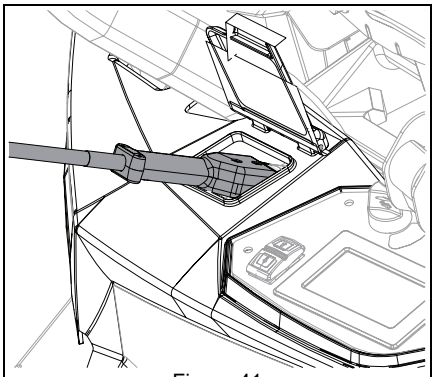

Figure 41

See Figure 42.

6. Connect EMI filter to charger.
7. Connect 110V power cord to EMI filter.
8. Connect power cord to 110Vwall outlet.

IMPORTANT: If an extension cord must be used, use one that is VDE/CE/GS certified, rated for a minimum of 13 amps, grounded and labeled as suitable for outdoor use.

9. Verify that charger is functioning by observing the flashing green light on the charger (battery synchronization may take up to 30 seconds).
10. Continue to charge batteries until light on charger is no longer flashing. Refer to digital display for remaining charge time and charging exit options.

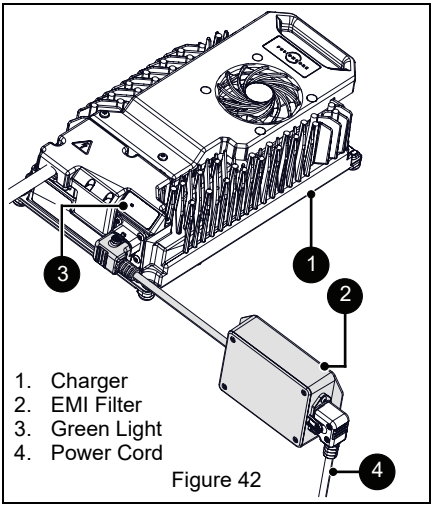

1. Charger
2. EMI Filter
3. Green Light
4. Power Cord

Figure 42

11. Disconnect battery charger from wall outlet.
12. Disconnect battery charger from charge port.
13. Position charge port cap over connector and close lid.

Sleep Mode

Batteries will not charge if batteries have entered sleep mode. Batteries enter sleep mode after extended periods of time (approximately 20 minutes) if:

- Key switch is in the on position
- Charger is plugged into the machine but power from outlet is not present.

To wake batteries from sleep mode, perform one of the following steps:

- Open and close hood assembly.
- Press SOC indicator button (see Figure 40).
- Power cycle unit (turn ignition key to the off position and then return it to the on position).

Limp Mode

WARNING: When cycling PTO switch, unit will continue to use remaining 5% of battery SOC until batteries are depleted.

Unit enters limp mode (blades no longer operate) when PTO switch is engaged and battery SOC reaches 5% or lower (see Blade Status under *Home Screen* on page 20). This feature allows operator sufficient time to return unit to a charger after resetting blades. To reset blades, cycle PTO switch (push PTO switch down to the off position and then return it to the on position). See *Charge Batteries* on page 37 for battery charging details.

ADJUSTMENTS

WARNING: AVOID INJURY. Read and understand the *Safety* section before proceeding.

REMOVE BATTERIES

1. Open hood assembly. See *Battery Access* on page 35.
2. Starting with the two rearmost batteries, vertically lift batteries from busbar using the supports on either side of battery tray.

INSTALL BATTERIES

1. Open hood assembly. See *Battery Access* on page 35.

See Figure 44.

2. Using two hands, carefully guide batteries into busbar until fully seated, starting with the two forward-most batteries. If properly installed, LED lights will illuminate, confirming recognition of software.

NOTICE: AVOID DAMAGE! Batteries must be carefully inserted vertically into busbar with battery connection pins facing the center of the machine. DO NOT drag batteries across busbar fins to position.

Refer to the following battery installation instructions before installing batteries:

- If two batteries are installed in the machine, install busbar cover. See *Install Busbar Cover* on page 39.
- Install two to four batteries in the machine whenever possible. Using one or three batteries will expose busbar terminals to grass, debris and moisture.
- Install at least two batteries to drive and mow. Installing one battery allows for drive-only operation. For drive-only operation, a warning will be present on the digital display (see *Warnings* on page 47).

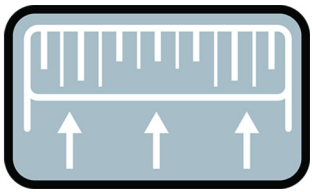

Figure 43

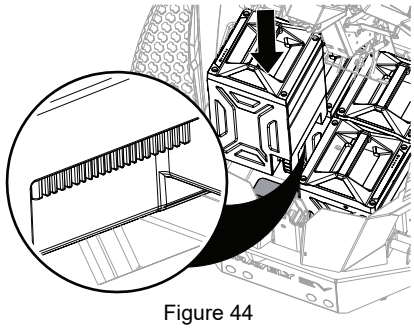

Figure 44

IMPORTANT: After installing batteries, press SOC indicator to ensure batteries wake and balance. See *Check SOC* on page 37.

INSTALL BUSBAR COVER

NOTICE: To prevent grass, debris and moisture build-up on busbar terminals, use busbar cover when two batteries are in the machine.

1. Remove busbar cover from rear fender on either side of unit.
2. Clear any accumulated debris from inside cover.
3. Position cover over exposed battery busbar pins. See Figure 45.
4. Close hood assembly and ensure handle is securely latched.

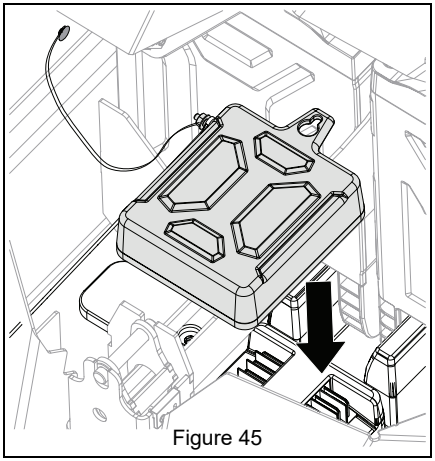

Figure 45

ADJUST SEAT

WARNING: AVOID INJURY. Make all seat adjustments with the unit stopped, parking brake engaged and key switch in the off position.

See Figure 46.

Ride Adjustment Knob

NOTICE: To avoid damage, DO NOT set ride adjustment knob outside of the maximum range.

1. Set ride adjustment knob to the weight of the operator.

For further adjustment:

- Turn ride adjustment knob clockwise for a firmer ride.
- Turn ride adjustment knob counterclockwise for a softer ride.

Set Seat Position

1. While seated, pull seat adjustment lever inward and slide seat forward or backward to desired position.
2. Release lever and slide seat slightly forward or backward to lock position.

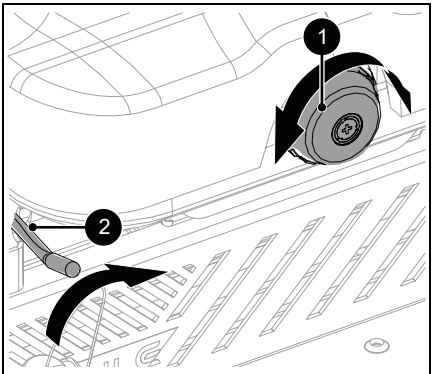

1. Seat Weight Adjustment Knob
2. Seat Adjustment Lever

Figure 46

See Figure 47.

Set Backrest Angle

Pull lever on left side of seat to adjust backrest angle.

Set Armrest Angle

Turn height adjustment knob clockwise to raise the front of armrest or counterclockwise to lower front of armrest.

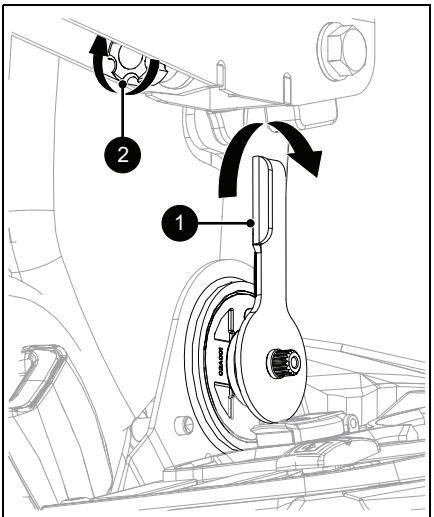

1. Backrest Adjustment Lever
2. Armrest Height Adjustment Knob

Figure 47

ADJUST STEERING LEVERS

Adjust Height

The steering lever height may be adjusted for operator comfort.

See Figure 48.

1. Remove key and wait for moving parts to stop and for hot parts to cool.
2. Remove steering lever hardware and remove steering lever from lower control arm.
3. Position steering lever at desired height and align with lower control arm. Secure with original hardware.

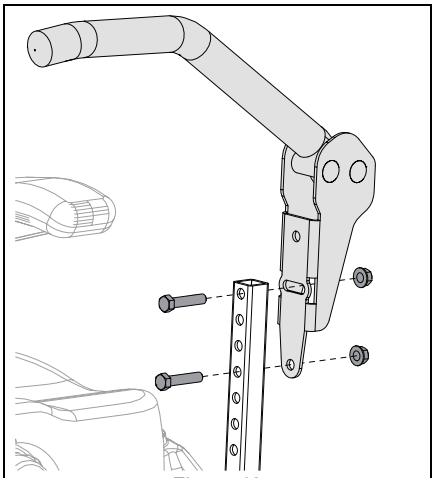

Figure 48

4. Adjust steering lever position.
5. Turn eccentric spacer so levers are at the same height and have a 1.3 cm – 2.5 cm (1/2" – 1") gap between lever ends. See Figure 49.

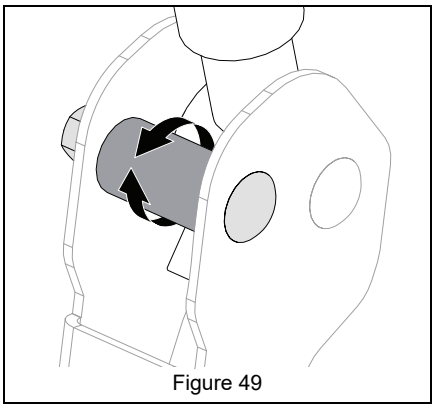

Figure 49

If there is more than 3.2 mm (1/8") between the horizontal alignment of the steering levers, align the levers.

6. Remove key and wait for moving parts to stop and for hot parts to cool.
7. Engage parking brake.
8. Loosen mounting hardware, align levers and tighten hardware. See Figure 50.

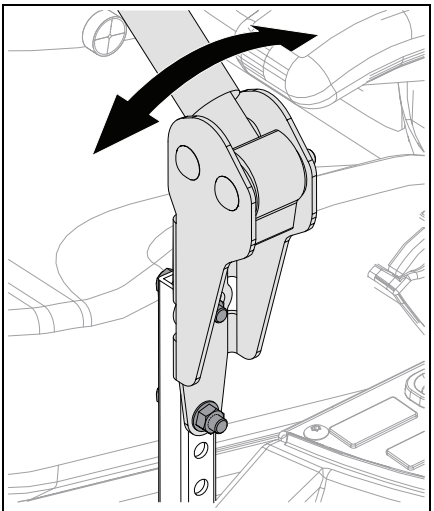

Figure 50

Adjust Forward Position

The steering lever forward position may be adjusted for operator comfort.

1. Remove key and wait for moving parts to stop and for hot parts to cool.
2. Loosen mounting hardware on steering lever assemblies.
3. Place steering levers in desired position:
   - Gently push levers forward for greater distance from operator.
   - Gently pull levers back for closer distance to operator.
4. Tighten hardware.

ADJUST UNIT TO DRIVE STRAIGHT

Adjust Tire Pressure

1. Remove key and wait for moving parts to stop and for hot parts to cool.
2. Check tire pressures. If needed, adjust to recommended pressures. See *Specifications* on page 54.
3. Check tracking.
   - If unit does not track straight, increase tire pressure to the drive wheel of the side it moves toward.

IMPORTANT: DO NOT exceed maximum tire pressure listed on tire sidewall.

- If increasing tire pressure does not correct tracking, adjust the limiter bolts as directed below.

Adjust Limiter Bolts

See Figure 51.

IMPORTANT: Unit ships with limiter bolts set to maximum drive speed.

Limiter bolts can be adjusted to increase or decrease drive wheel speeds. To adjust:

1. Loosen jam nut.
   - Turn limiter bolt counterclockwise to increase maximum drive wheel speed on that side.
   - Turn limiter bolt clockwise to reduce maximum drive wheel speed on that side.
2. Tighten jam nut.

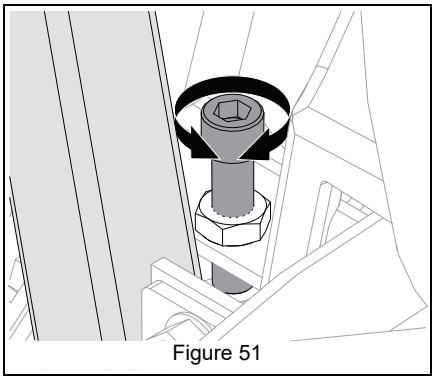

Figure 51

3. Align steering levers. See *Adjust Steering Levers* on page 41.

CALIBRATE STEERING SENSORS

In the event of a steering sensor, electrical, or mechanical fault, steering sensor calibration may be required.

Steering Sensor Positions

The digital display will prompt the following steering positions during the steering sensor calibration sequence:

- LN / RN: Left Neutral / Right Neutral
- LF / RF: Left Forward / Right Forward
- LR / RR: Left Reverse / Right Reverse

Steering Sensor Calibration Sequence

NOTICE: If calibration does not properly set neutral, forward, or reverse, contact an authorized Gravely EV dealer.

1. Navigate to the maintenance screen on the digital display See *Maintenance Screen* on page 23.
2. Hold display switch down (approximately 7 seconds) until steering sensor calibration screen appears. See *Steering Sensor Calibration Screen* on page 24.

Follow the calibration sequence prompted on the digital display:

IMPORTANT: Refer to the digital display for to determine if levers are properly positioned and step is complete.

3. Hold steering levers in neutral.
4. Position left steering lever in the forward-most position.
5. Position left steering lever in the rear-most position.
6. Position right steering lever in the forward-most position.
7. Position right steering lever in the rear-most position.
8. Position steering levers in neutral.
9. Use the navigation switch to save or cancel the steering sensor parameters.
10. Wait until loading screen and splash screen are complete.
11. Power cycle unit to clear calibration faults (turn ignition key to the off position and then return it to the on position).

ADJUST HOOD LATCH MAGNETIC SWITCH

See Figure 52.

Mower may lose Live-to-Drive due to a communication received from the battery to the VCM caused by an incorrect hood latch magnetic switch adjustment.

To adjust:

1. Loosen tapping screws on slotted magnet.
2. Adjust magnet switch to achieve 9.5 mm (3/8") gap.

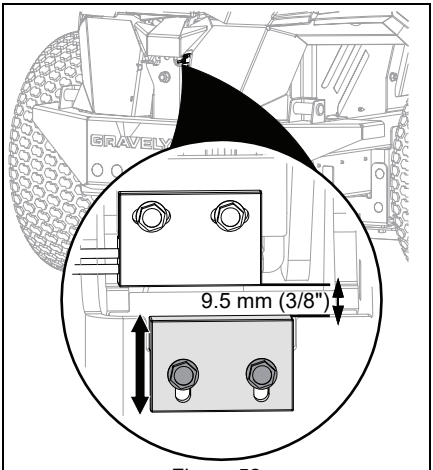

Figure 52

3. Tighten tapping screws.

Remove / Install Mower Deck

REMOVE DECK

1. Remove all batteries from mower.
2. Wait for all moving parts to stop and for hot parts to cool.
3. Place unit in service position. See *Maintenance Schedule* on page 31.

WARNING: AVOID INJURY! Springs store energy. Keep body parts well away from pinch points when removing the deck.

4. Remove and retain Anderson connector screws securing Anderson connectors to frame. Carefully disconnect Anderson connectors and 6-pin connectors from all three spindle motors.

WARNING: AVOID INJURY. Mower lift arms and lift pedal could cause severe injury if the lift-assist springs are not disconnected before the lift links.

5. Engage transport lock and slowly disconnect lift-assist spring from mower lift arm by unthreading the spring eye-bolt. See Figure 53.

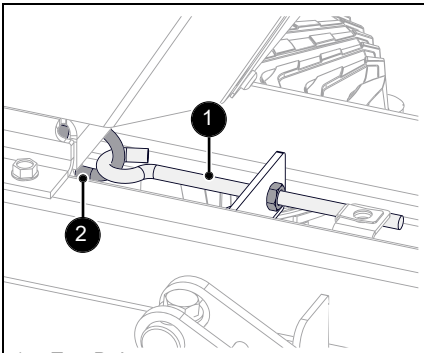

1. Eye-Bolt
2. Deck Lift-Assist Spring

Figure 53

NOTICE: Position supports such as blocks or jack stands under each side of the deck.

6. Release transport lock and slowly lower deck until it rests on supports.
7. Remove and retain hardware securing mower lift links to the deck. See Figure 54.

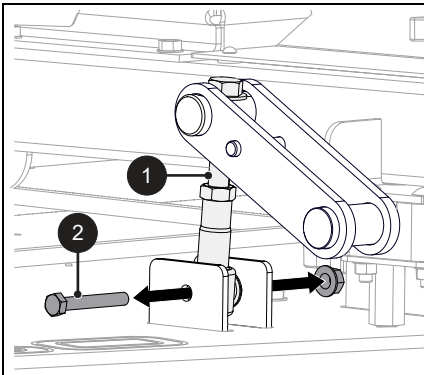

1. Mower Lift Link
2. Mounting Hardware

Figure 54

7. Remove and retain the drag link hardware. See Figure 55.
8. Slide deck out from under unit.

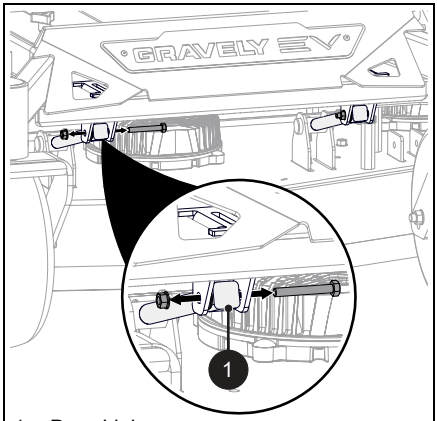

1. Drag Link

Figure 55

Install Deck

1. Position deck under unit.
2. Reinstall drag links to deck with original mounting pins and hardware.
3. Reinstall lift links using original hardware.
4. Reconnect 6-pin connectors and Anderson connectors to all three spindle motors. Reinstall Anderson connector retaining screws.
5. Raise deck to the transport position and reconnect lift assist springs.
6. Adjust spring length to specifications. See *Adjust Blade Height* on page 45.

LEVEL AND PITCH MOWER DECK

IMPORTANT: Make sure unit is on a flat, level surface and that tires are inflated to the recommended pressures.

Check Blade Level and Pitch

1. Place steering levers in neutral position and engage parking brake.
2. Remove key and wait for moving parts to stop and for hot parts to cool.
3. Raise mower deck to 9.5 cm (3 3/4”) cutting height.
4. Place blocks at each corner of the deck to support the weight of the deck.

NOTICE: Place blocks under the bottom edge of the deck, not under the reinforcement bar welded along deck face.

See Figure 56.

5. Position mower blades so ends point left to right across the width of the deck.
6. Measure the distance between the ground and cutting edge of the left blade and right blades. Distances should be within 4.7 mm (3/16”).

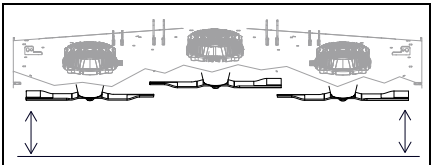

Figure 56

See Figure 57.

7. Position mower blades so ends point front to back and measure the following:
   - At the front of the deck, measure the distance between the ground and the cutting edge of the middle blade.
   - At the rear of the deck, measure the distance between the ground and the cutting edge of the left and the right blades.
8. The cutting edge at the front of the deck should be 3.2 mm (1/8") lower than the cutting edges at the rear of the deck.

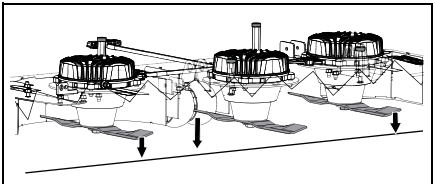

Figure 57

If measurements are out of range, raise the low side of the deck using the height adjusters on the deck lift brackets. See *Adjust Blade Height* on page 45.

Adjust Blade Height

See Figure 58.

Level and pitch the mower with the height adjusters on each deck lift bracket.

1. Loosen the jam nut on the deck leveling bracket bolt about 1/4 turn to reduce clamp load on the height adjusters.
2. Loosen the jam nut on the deck lift bolt and then turn the bolt clockwise to raise the deck or counterclockwise to lower the deck.
3. Adjust all four corners of the deck to desired pitch, ensuring that deck is even side to side and front to back.
4. Tighten jam nuts.

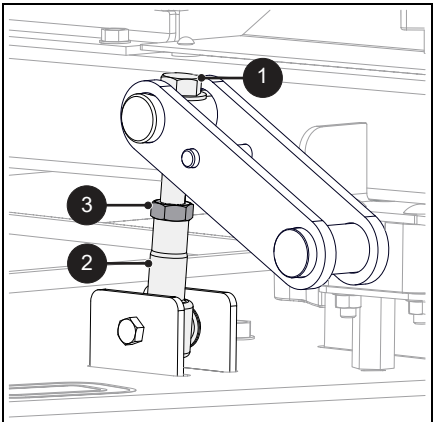

1. Adjustment Bolt
2. Deck-Lift Trunnion
3. Jam Nut

Figure 58

FAULT / WARNING CODE INDEX

See *Warnings* on page 47 for warning code troubleshooting.

See *Faults* on page 46 for Fault codes that do not require immediate reporting to Gravely dealer.

First Digit: Location	0 = Other 1 = Left 2 = Center 3 = Right
Second Digit: Component	1 = VCM 2 = Battery 3 = Deck Motor 4 = Deck Controller 5 = Drive Motor 6 = Drive Controller 7 = Steering Sensor
Last Three Digits: Fault / Warning Identification Number	The last three digits are used to identify the fault / warning cause. If fault exists, report five digit code to an authorized Gravely EV dealer except those listed in *Faults* section. If warning code exists but is not listed, report five digit code to an authorized Gravely EV dealer, as service may be needed.

FAULTS

IMPORTANT: Machine will continue to operate if other installed batteries have sufficient charge.

IMPORTANT: All other faults report code to an authorized Gravely EV dealer.

02020	Battery has insufficient charge remaining.	Charge battery to remove fault. If fault remains after charging report to a Gravely dealer.
02052		
02084		
02116		

WARNINGS

IMPORTANT: Warning codes do not require service or troubleshooting. Warning codes display when unit is not within standard operating conditions. See *Fault / Warning Code Index* on page 46 for fault and warning code details.

Location 0 = Other 1 = Left 2 = Center 3 = Right	**Component** 1 = VCM 2 = Battery 3 = Deck Motor 4 = Deck Controller 5 = Drive Motor 6 = Drive Controller 7 = Steering Sensor	**Dealer Description**	**Dealer Troubleshooting**
01065		VCM reported charge input.	Note: Input from charging is high on VCM. If charging, warning will be removed. Step 1: If attempting to charge, plug charger into machine and into water resistant outlet. Step 2: Check charge diode and verify a short has not occurred. Step 3: Use schematic and check for shorts or opens in the charge circuit. Pin 15 on VCM.
01066		VCM reported battery loss of Live-to-Drive.	Note: Machine lost Live-to-Drive due to a battery communication to the VCM. Step1: Check mechanics of hood latch and verify magnetic switch-to-magnet length is within 9.5 mm (3/8"). See *Adjust Hood Latch Magnetic Switch* on page 43. Step 2: Contact an authorized Gravely EV dealer.
01067		VCM reported ignition loss of Live-to-Drive.	Note: Machine lost Live-to-Drive due to ignition input into the VCM. Step 1: Verify ignition switch is in the on position. Step 2: Contact an authorized Gravely EV dealer.
01068		VCM reports loss of Live-to-Drive.	Note: Machine lost Live-to-Drive due to operator getting off the seat. Step 1: Check switch functionality for normally open. Step 2: Check diagnostic page for seat switch functionality into the VCM. Step 3: Check seat switch circuit for opens or shorts.
02129		Battery warning 29.	Step 1: Power cycle vehicle. Step 2: Contact dealer.
02130		Battery warning 30.	Step 1: Power cycle vehicle. Step 2: Contact dealer.

WARNINGS

IMPORTANT: Warning codes do not require service or troubleshooting. Warning codes display when unit is not within standard operating conditions. See *Fault / Warning Code Index* on page 46 for fault and warning code details.

Location 0 = Other 1 = Left 2 = Center 3 = Right	**Component** 1 = VCM 2 = Battery 3 = Deck Motor 4 = Deck Controller 5 = Drive Motor 6 = Drive Controller 7 = Steering Sensor	**Dealer Description**	**Dealer Troubleshooting**
02131, 02180		Battery reported one battery discharge mode.	Step 1: Add another battery to the system if operator wants to engage deck.
02132, 02149, 02165, 02181		Battery reported end of life warning.	Step 1: Battery is close to end of life.
02133, 02150, 02166, 02182		Battery reported end of life.	Step 1: Battery is at end of life.
11065		VCM reported left deck stall.	Note: Deck motor has stalled. Cycle PTO to resume cutting. Step 1: Confirm phase wiring is connected properly from motor to controller. Step 2: Reduce cutting load by reducing vehicle speed or cut height. Step 3: Verify machine is powered down, check blade for obstruction or material buildup on spindle or blade.
21066		VCM reported center deck stall.	
31067		VCM reported right deck stall.	
13062		Left deck motor overheating warning.	Step 1: Check motor and controller phase wire connections for open circuit. Step 2: Check to ensure blade rotates freely. Step 3: Reduce cutting load. Step 4: Clean debris around motor and controller.
23062		Center deck motor overheating warning.	
33062		Right deck motor overheating warning.	
14063		Left deck controller overheating warning.	Step 1: Check motor and controller phase wire connections for open circuit. Step 2: Reduce cutting load. Step 3: Clean debris around motor and controller.
24063		Center deck controller overheating warning.	
34063		Right deck controller overheating warning.	

WARNINGS

IMPORTANT: Warning codes do not require service or troubleshooting. Warning codes display when unit is not within standard operating conditions. See *Fault / Warning Code Index* on page 46 for fault and warning code details.

Location 0 = Other 1 = Left 2 = Center 3 = Right	**Component** 1 = VCM 2 = Battery 3 = Deck Motor 4 = Deck Controller 5 = Drive Motor 6 = Drive Controller 7 = Steering Sensor	**Dealer Description**	**Dealer Troubleshooting**
15062		Left traction motor overheating warning.	Step 1: Check motor and controller phase wire connections for open circuit. Step 2: Check to ensure wheel rotates freely. Check brake functionality by turning machine off and use mechanical override to freely move wheel. Step 3: Reduce load. Step 4: Clean debris around motor and controller.
35062		Right traction motor overheating warning.	
16063		Left traction controller overheating warning.	Step 1: Check motor and controller phase wire connections for open circuit. Step 2: Reduce load. Step 3: Clean debris around motor and controller.
36063		Right traction controller overheating warning.	

TROUBLESHOOTING

Problem	Probable Cause	Correction
System does not start.	Safety Interlock System is not engaged or is faulty.	Check Safety Interlock System. See *Safety Interlock System* on page 18.
	Batteries are not charged.	Charge batteries. See *Charge Batteries* on page 37.
	Electrical system is faulty.	Contact an authorized Gravely EV dealer.
Unit does not drive.	Live-to-Drive feature is not activated before parking brake is released.	Ensure Live-to-Drive feature is activated before releasing parking brake. See *Safety Interlock System* on page 18 and / or *Diagnostic Screen* on page 25.
	10A fuse is blown.	Replace fuse. Contact an authorized Gravely EV dealer if fuse fails again.
	Fault code is present.	Contact an authorized Gravely EV dealer.
	Brake wiring is faulty.	Contact an authorized Gravely EV dealer.
	Parking brake is faulty.	Contact an authorized Gravely EV dealer.
	Electrical system components are not communicating.	Contact an authorized Gravely EV dealer.
Unit does not operate at full speed.	High / low speed switch is set to slow speed.	Set switch to high speed drive. See *High / Low Speed Switch* on page 16.
PTO malfunctions.	Operator presence control switch is not engaged.	Activate switch by sitting on operator seat. See *Diagnostic Screen* on page 25.
	Operator presence control switch is faulty.	Contact an authorized Gravely EV dealer.
	PTO switch, wiring, or connectors are faulty.	Contact an authorized Gravely EV dealer.
	Build-up of debris under mower deck.	Clean underside of mower deck.
	Blades are locked.	Disengage PTO switch and restart the system.
Unit moves with parking brake engaged.	Brake bypass is engaged.	Release parking brake bypass lever.
	Parking brake is faulty.	Contact an authorized Gravely EV dealer.
Unit does not drive straight.	Tire pressure is incorrect.	Check tire pressure. See *Specifications* on page 54.
	Steering levers need adjustment.	See *Adjust Unit to Drive Straight* on page 42.
	Steering levers need to be recalibrated.	See *Calibrate Steering Sensors* on page 42.

TROUBLESHOOTING		
Problem	**Probable Cause**	**Correction**
Poor cutting quality.	Mower blades not level or mower deck pitch is incorrect.	Level and adjust pitch of mower deck. See *Check Mower Blades* on page 32.
	Mower blades are dull or faulty.	Sharpen or replace mower blades. Refer to your unit's Service Manual.
	Mowing speed is too fast.	Drive slower when cutting grass.
	Cutting height is too low.	Do not set height of cut too low. For very tall grass, mow twice.
Temperature warning is displayed on maintenance screen.	Motors and / or controllers are overheating.	Stop the unit and wait for hot parts to cool. See *Stop The Unit* on page 30. If fault persists, contact an authorized Gravely EV dealer.

STORAGE

Follow the recommended battery storage temperatures for short-term and long-term storage. See *Battery Storage Temperatures* on page 52.

SHORT-TERM STORAGE

Up to 3 Months

NOTICE: DO NOT clean unit with water. To avoid damage to electrical components and motors, clean unit with compressed air or a dry cloth.

NOTICE: DO NOT store batteries in a container where they may short-circuit each other or be short-circuited by other metal objects.

1. Allow unit to cool and clean with compressed air or a dry cloth.
2. Tighten all hardware to correct specifications.
3. Inspect unit for visible signs of wear or damage. Repair as needed.
4. Turn key switch to off position and remove key.
5. Store unit in a cool, dry, protected area. DO NOT store unit outdoors.

To ensure maximum battery life:

- Charge or discharge batteries 50% – 80%.
- Batteries may remain in the mower.
- Check battery state of charge every three months and recharge to 50% – 80% if necessary.

LONG-TERM STORAGE

3 – 12 Months or Longer

1. Perform short-term storage procedures.
2. Lubricate as directed in *Maintenance Schedule* on page 31.
3. Touch-up all scratched painted surfaces.

To ensure maximum battery life:

- Charge or discharge batteries 30% – 80%.
- Remove batteries from mower.
- If batteries are stored in mower, open battery compartment hood or disconnect hood switch. DO NOT store batteries in mower with hood closed or without disconnecting hood switch.
- Check battery state of charge every twelve months and recharge to 30% – 80% if necessary.

NOTICE: After extended periods of storage, it may be necessary to charge and discharge batteries at least three times to obtain maximum performance.

BATTERY STORAGE TEMPERATURES

Follow the recommended battery storage temperatures:

- *3 Months*: DO NOT store batteries in temperatures lower than -20° C (-4° F) or above 45° C (113° F).
- *12 Months*: DO NOT store batteries in temperatures lower than -20° C (-4° F) or above 20° C (68° F).

ACCESSORIES

See your Gravely EV dealer for a complete list of compatible accessories and attachments for your unit.

IMPORTANT: Some accessories may cause battery packs to discharge more rapidly.

Description	Part No.
13" Semi-Pneumatic Tire Kit	79703400
Hitch Kit	79108500
Sunshade Kit	79218000
OCDB Kit (Models 997005, 997006, 997007, 997011, 997012, 997013)	79221600
Striping Kit	79221800
Second Offboard Charger Kit – 110V / 220V	79700100
LED Light Kit	79703200
Beacon Light Kit	79700500
Fast Charger with Y Harness Kit	79701200
48" Side-discharge Mulch Kit	79701800
52" Side-discharge Mulch Kit	79701900
60" Side-discharge Mulch Kit	79702000
48" Side-discharge High-Lift Blade Kit	79702100
52" Side-discharge High-Lift Blade Kit	79702200
60" Side-discharge High-Lift Blade Kit	79701400
52" Rear-discharge High-Lift Blade Kit	79702600
60" Rear-discharge High-Lift Blade Kit	79702500
Suspension Fork Kit	79702800
22" Rear Tweel Kit	79702900
EV Battery (1 Pack) Kit	89700100
Offboard Charger Kit – 110V / 220V	89700200
Composite Grass Catcher (52" and 60" only)	79404800
DC Converter Kit	79703100

BATTERY DISPOSAL

When a battery no longer takes a charge, the battery will need to be recycled. Contact an authorized Gravely EV dealer to recycle battery.

SPECIFICATIONS			
Model Number	**997005 / 997011**	**997006 / 997012**	**997007 / 997013**
Description	Pro-Turn EV 48 Side Discharge	Pro-Turn EV 52 Side Discharge	Pro-Turn EV 60 Side Discharge
Batteries	Fusion Core Lithium Ion		
Wheel Drive Motors – kW	5 per motor		
Spindle Motors – kW	3.5 per motor		
Transmission			
Type	Electric Transaxles		
Gearcase Oil	80W-140 Synthetic Gear Oil (Gravely p/n 00981400)		
Drive			
Forward Maximum – km/h (mph)	17.7 (11.0)		
Reverse Maximum – km/h (mph)	8.8 (5.5)		
Turning Radius	Zero		
Service Brake	Regenerative Braking		
Parking Brake	Electromagnetic Brake		
Size and Weight			
Length – cm (in)	210.8 (83.0)		
Width – cm (in) • With Discharge Chute Up • With Discharge Chute Down	 127.0 (50) 157.5 (62)	 142.2 (56) 170.2 (67)	 160.0 (63) 190.5 (75)
Height – cm (in) • With ROPS extended • With ROPS folded	 182.9 (72) 124.5 (49)		
Weight – kg (lbs) • With 4 Batteries • Without Batteries	 571.9 (1261) 473.6 (1044)	 582.4 (1284) 484.0 (1067)	 595.1 (1312) 496.7 (1095)
Tires			
Front Tire Size – in	13 x 6.5-6 (Pneumatic)		
Rear Tire Size – in	22 x 10-12	22 x 10.5-12	22 x 12-12
Recommended Front Tire Pressure – kPa (psi)	110.3 – 137.9 (16 – 20)		
Recommended Rear Tire Pressure – kPa (psi)	82.7 – 103.4 (12– 15)		
Mower Deck			
Cutting Height – cm (in)	3.8 – 12.7 (1.5 – 5.0)		
Cutting Height Increments	0.635 (0.25)		
Cutting Width – cm (in)	121.9 (48)	132.1 (52)	152.4 (60)
Mower Deck Lift	Mechanical Pin Lock		

SPECIFICATIONS			
Model Number	**997008 / 997014**	**997009 / 997015**	**997010 / 997016**
Description	Pro-Turn EV 48 Rear Discharge	Pro-Turn EV 52 Rear Discharge	Pro-Turn EV 60 Rear Discharge
Batteries	Fusion Core Lithium Ion		
Wheel Drive Motors – kW	5 per motor		
Spindle Motors – kW	3.5 per motor		
Transmission			
Type	Electric Transaxles		
Gearcase Oil	80W-140 Synthetic Gear Oil (Gravely p/n 00981400)		
Drive			
Forward Maximum – km/h (mph)	17.7 (11.0)		
Reverse Maximum – km/h (mph)	8.8 (5.5)		
Turning Radius	Zero		
Service Brake	Regenerative Braking		
Parking Brake	Electromagnetic Brake		
Size and Weight			
Length – cm (in)	210.8 (83.0)		
Width – cm (in)	127.0 (50)	137. 2 (54)	157.5 (62)
Height – cm (in) • With ROPS extended • With ROPS folded	182.9 (72.0) 124.5 (49.0)		
Weight – kg (lbs) • With 4 Batteries • Without Batteries	583.3 (1286) 484.9 (1069)	590.1 (1301) 491.7 (1084)	601.5 (1326) 503.0 (1109)
Tires			
Front Tire Size – in	13 x 6.5-6 (Pneumatic)		
Rear Tire Size – in	22 x 10-12	22 x 10.5-12	22 x 12-12
Recommended Front Tire Pressure – kPa (psi)	110.3 – 137.9 (16 – 20)		
Recommended Rear Tire Pressure – kPa (psi)	82.7 – 103.4 (12– 15)		
Mower Deck			
Cutting Height – cm (in)	3.8 – 12.7 (1.5 – 5.0)		
Cutting Height Increments	0.635 (0.25)		
Cutting Width – cm (in)	121.9 (48)	132.1 (52)	152.4 (60)
Mower Deck Lift	Mechanical Pin Lock		

Electric Outdoor Power Equipment Limited Warranty

AriensCo warrants to the original purchaser that Gravely brand products purchased on or after 09/01/2022 will be free from defects in material and workmanship for the time period noted in the chart below.

If any product is rented or leased, then the duration of these warranties shall be 90 days after the date of purchase.

An authorized Gravely EV dealer will repair any defect in material or workmanship, and repair or replace any defective part, subject to the conditions, limitations and exclusions set forth herein. Such repair or replacement will be free of charge (labor and parts) to the original purchaser; except as noted below. Pick-up and delivery are at the owner's expense.

The warranty code is found on the model and serial number identification label on the mower, off-board battery charger or serialized battery.

Warranty Code	Product Group	Warranty Period
AC	Batteries	3 Years.
AD	Off-Board Battery Chargers	5 Years.
EA	Pro-Turn EV and Pro-Stance EV Mowers	5 Years or 1500 Hours, Whichever Comes First. No Hour Limit for First 2 Years.

Special Limitations

The charts below detail special **limitations** to this warranty.

Warranty Term Limitations	Warranty Period
Cloth, plastic and rubber components, mower blades and tires.	Components are covered for manufacturer's defect only, not wear.
Digital display panel and electric failsafe parking brake.	2 Years.
Traction drive gear oil.	Oil is covered for warranty repairs only, not maintenance.

Exclusions – Items Not Covered by This Warranty

- Parts that are not genuine Gravely service parts are not covered by this warranty and may void the warranty if the parts result in premature wear or damage to the product.
- Damages resulting from the installation or use of any part, accessory, or attachment which is not approved by the AriensCo for use with product(s) identified herein are not covered by this warranty.
- Any misuse, alteration, improper assembly, improper adjustment, neglect, or accident which requires repair is not covered by this warranty.
- **Any tampering with the hour meter voids any and all warranties.**
- Products are designed to the specifications in the area that the product was originally distributed. Different areas may have significantly different legal and design requirements. This warranty is limited to the requirements in the area in which the unit was originally distributed. AriensCo does not warrant this product to the requirements of any other area. Warranty service is limited to service within the area originally distributed.
- In countries other than the United States and Canada, contact the AriensCo dealer for warranty policies that govern within your country. Rights may vary from country to country and within any one country.

Parts and Accessories

Service replacement parts and non-serialized accessories are warranted for 90 days from date of purchase. Labor is not included.

Customer Responsibilities

Register the product immediately at the time of sale. If the dealer does not register the product, the customer must register the unit on-line at www.gravely.com.

To obtain warranty service, the **original purchaser** must:

- Ensure that the maintenance and adjustments explained in the Operator's Manual are routinely completed.
- Promptly notify AriensCo or an authorized Gravely EV dealer of the need for warranty service.
- Transport the product to and from the place of warranty service at owner's expense.
- Have the warranty service performed by an authorized Gravely EV dealer.

To find an authorized dealer use the dealer locator on our websites, or contact us by mail or phone.

Globally except Australia or New Zealand:	**Australia:**	**New Zealand:**
AriensCo 655 W. Ryan Street Brillion, WI 54110 Phone: (920) 756 - 4688 www.gravely.com	Roy Gripske & Sons Pty Ltd 11 Sodium Street Narangba Queensland 4504 Australia Phone: (61130) 036 3004 www.rgs.com.au	Masport Ltd 320 Ti Rakau Drive East Tamaki Auckland 2013 New Zealand Phone: 0800 627 7678 www.masport.co.nz

Disclaimer

AriensCo may from time to time change the design of its products. Nothing contained in this warranty shall be construed as obligating the AriensCo to incorporate such design changes into previously manufactured products, nor shall such changes be construed as an admission that previous designs were defective.

Limitation of Remedy and Damages

AriensCo liability under this warranty, and under any implied warranty that may exist, is limited to repair of any defect in workmanship, and repair or replacement of any defective part. AriensCo shall not be liable for incidental, special, or consequential damages (including lost profits). Some states do not allow the exclusion of incidental or consequential damages, so the above limitation or exclusion may not apply to you.

AriensCo shall not be held liable for damages, including premature wear and tear, or injuries caused by installation of unauthorized parts and accessories or for parts and accessories not installed by an authorized Gravely dealer.

Australian Consumer Law

The following applies solely to warranties subject to Subsection 102(1) of the Australian Consumer Law: Our goods come with guarantees that cannot be excluded by the Australian Consumer Law. You are entitled to a replacement or refund for a major failure and for compensation for any other reasonably foreseeable loss or damage. You are also entitled to have the goods repaired or replaced if the goods fail to be of acceptable quality and failure does not amount to a major failure.

Disclaimer of Further Warranty

AriensCo makes no warranty, express or implied, other than what is expressly made in this warranty. If the law of your state provides that an implied warranty of merchantability, or an implied warranty of fitness for particular purpose, or any other implied warranty, applies to AriensCo then any such implied warranty is limited to the duration of this warranty. Some states do not allow limitations on how long an implied warranty lasts, so the above limitation may not apply to you.

This warranty gives you specific legal rights, and you may also have other rights which vary from region to region.

655 West Ryan St.
Brillion, WI 54110

www.gravely.com

GENUINE OEM PARTS

parts.gravely.com

WARNING: Cancer and Reproductive Harm - www.P65Warnings.ca.gov

ARIENS|CO

PRINTED in WISCONSIN