## Parts:

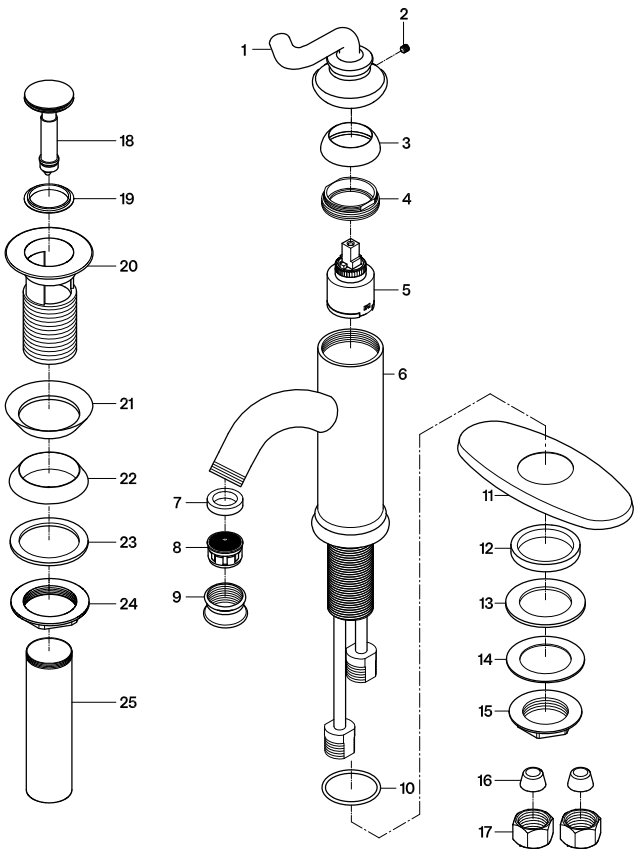


Replacement Parts:

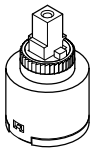

Cartridge: KSRP3891C

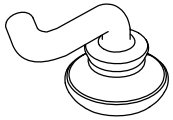

Handle: LSH5411RL

## CARE AND MAINTENANCE OF YOUR FAUCET

Your KINGSTON faucet has been finished to the most strict standards; however, due to the high content of minerals in the water, your finish may appear dull and tarnished after time. These are some do's and don'ts to maintain the luster on your faucet for many years to come.

DO
1. Use a silicone based caulking when installing.
2. Clean your faucet with only a mild soap and water solution.
3. Dry your faucet after using it.
4. Give it a coat of Carnauba Wax periodically.

DON'T
1. Use plumbers putty when installing the faucet.
2. Use any abrasive cleaning agents.

It may seem like a very simple and short list but it is that simple to maintain your faucet, looking shiny and new.

If your faucet is already looking somewhat dull and tarnished, before replacing it, try cleaning it with a 50/50 solution of vinegar and water, you may need to soak some rags and wrap around those stubborn areas, leave
overnight and rinse completely in the morning, apply Carnauba wax once you have removed the mineral deposits.

KINGSTON

# FAUCETURE

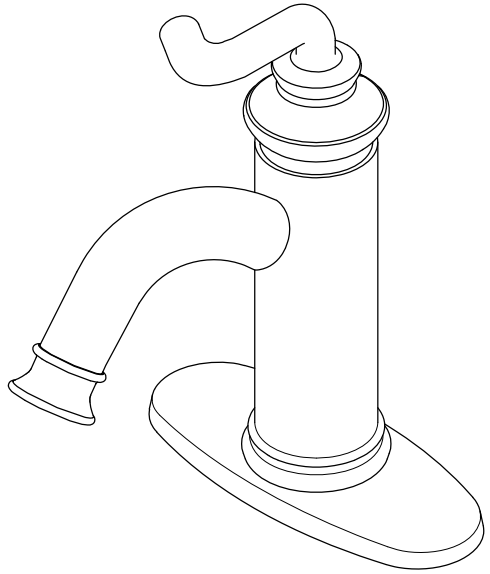

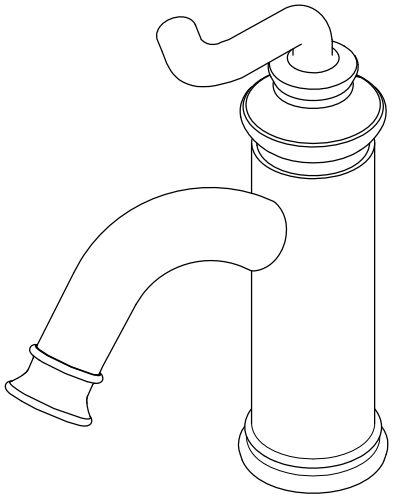

## Parts:

| Washer & Lock Nut | Cone Washer & Coupling Nut | Push Drain |
|---|---|---|
| 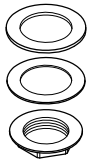 | 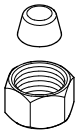 | 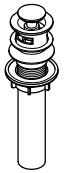 |
| 1 Pc | 2 Pcs | 1 Pc |


www.kingstonbrass.com

TOLL-FREE CUSTOMER SERVICE: 1-877-2-KBRASS
TECHNICAL SUPPORT E-mail: service@kingstonbrass.com
12775 Reservoir Street, Chino, CA 91710


**NOTICE**

Failure to follow all directions may cause leaks which may result in water damage

KINGSTON

# FAUCETURE

## Single Handles Lavatory Faucet with Push Drain
## Installation Instructions

**BEFORE BEGINNING INSTALLATION:**

1. Flush plumbing lines to clear any debris.
2. Shut off both supply lines after flushing.

**Need Tools:**

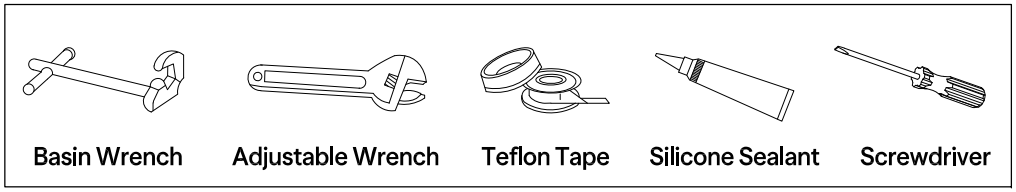


1

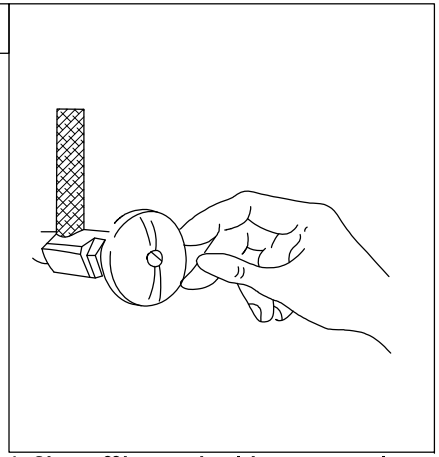

1. Shut off hot and cold water supply under sink. Plug sink drain with cloth to avoid losing small parts.
Remove old faucet.

2

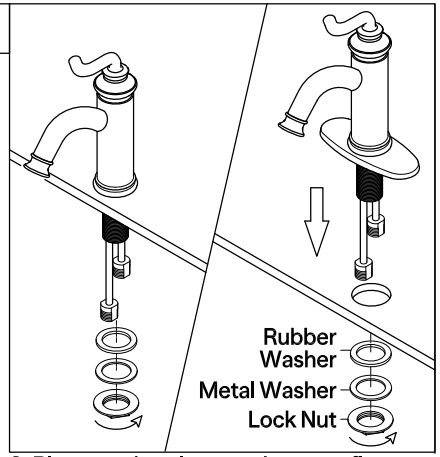


2. Place optional escutcheon or flange on bottom of new faucet before position faucet through sink hole. Insert rubber washer, metal washer and thread lock nut, secure by tightening with a wrench.

3

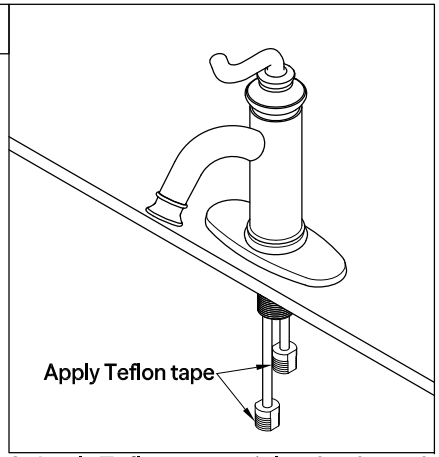


3. Apply Teflon tape to inlet shanks and connect supply lines.

4

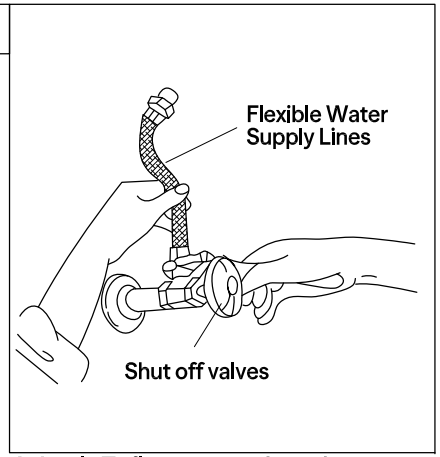


4. Apply Teflon tape to threads on faucet shank and shut off valves, connect water supply line.

5

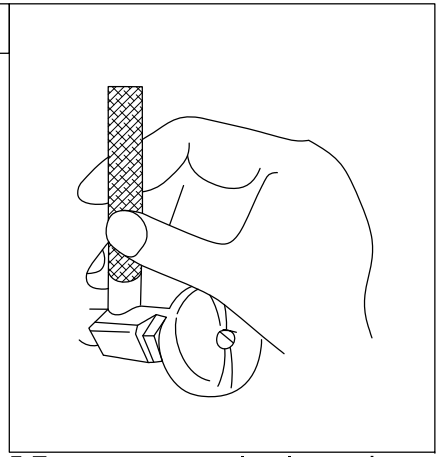

5. Turn on water supply valves and check for leaks, especially all supply line connections.

6

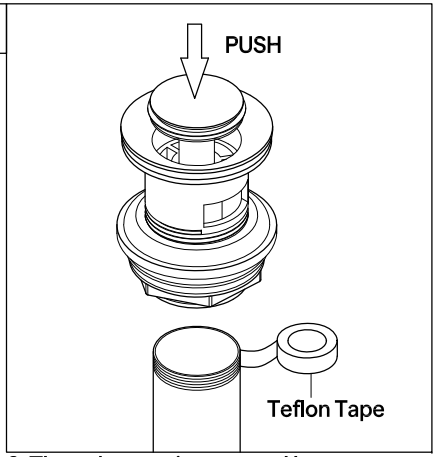


6. Thread mounting nut and bottom gasket onto drain body. Wrap the threaded end of the drain body with Teflon tape.

7

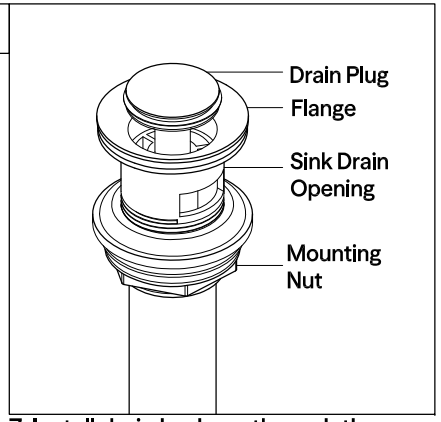


7. Install drain body up through the drain opening and reattach the flange onto drain body. Holding the drain body in position with overflow facing the position of sink overflow hole and hand tighten the mounting nut.

8

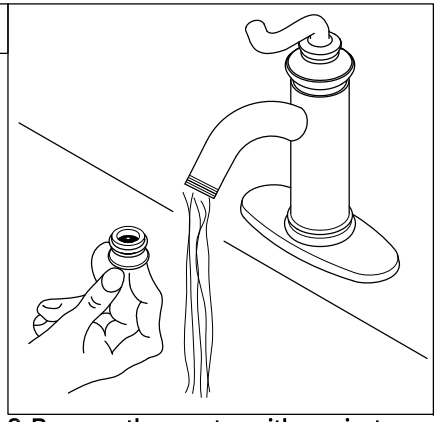

8. Remove the aerator with a coin, turn on the faucet, let water run for at least one minute, this will clear any debris left in the line, reinstall aerator.

**Warning!!!**

- Do not over-tighten nut during installation.
- Over-tighten may crack the valve and cause severe leak.

©2025 LVC Kingston LLC. All Rights Reserved.
2026-07-TG