Operator's Manual

Greensmaster® 1018, 1021, and 1026 Greensmower

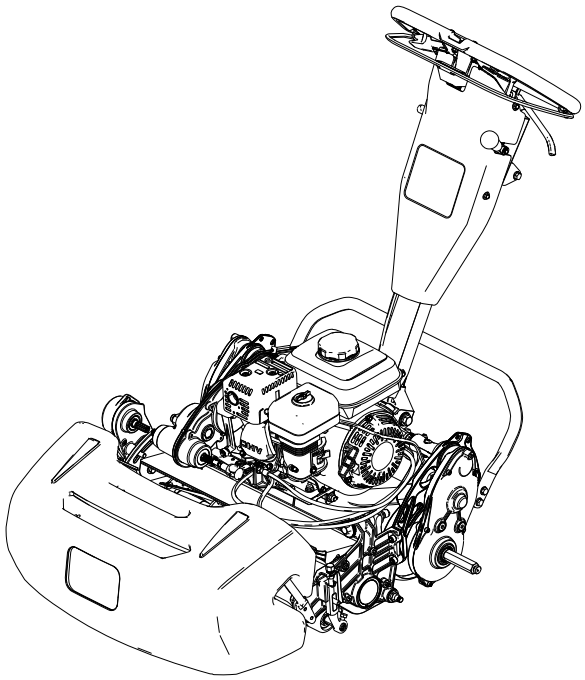

Model—Serial Range

04820—418000000 and Up
04830—418200000 and Up
04840—418200000 and Up

3483-838A

Original Instructions (EN)

3483-838

Disclaimers and Regulatory Information

This product complies with all relevant European directives; for details, please see the separate product specific Declaration of Conformity (DOC) sheet.

It is a violation of California Public Resource Code Section 4442 or 4443 to use or operate the engine on any forest-covered, brush-covered, or grass-covered land unless the engine is equipped with a spark arrester, as defined in Section 4442, maintained in effective working order, or the engine is constructed, equipped, and maintained for the prevention of fire.

The enclosed engine owner's manual is supplied for information regarding the US Environmental Protection Agency (EPA) and the California Emission Control Regulation of emission systems, maintenance, and warranty. Replacements may be ordered through the engine manufacturer.

Operating this machine 1,500 m (5,000 ft) above sea level requires a high-altitude jet. Refer to your Honda engine owner's manual.

⚠ WARNING

CALIFORNIA
Proposition 65

The engine exhaust from this product contains chemicals known to the State of California to cause cancer, birth defects, or other reproductive harm.

Use of this product may cause exposure to chemicals known to the State of California to cause cancer, birth defects, or other reproductive harm.

Electromagnetic Compatibility Certification

If this machine is equipped with a telematics device, refer to your authorized Toro distributor for instructions to activate the device.

Domestic: This device complies with FCC Rules Part 15. Operation is subject to the following two conditions: (1) This device may not cause harmful interference and (2) this device must accept any interference that may be received, including interference that may cause undesirable operation.

FCC ID: OF7RTS24

IC: 3575A-RTS24

© 2026—The Toro® Company
8111 Lyndale Ave So
Bloomington, MN 55044

Contact us at www.Toro.com
Printed in the USA
All rights reserved

Electromagnetic Compatibility Certification (continued)

This equipment has been tested and found to comply within the limits for a Class B digital device, pursuant to part 15 of the FCC Rules. These limits are designed to provide reasonable protection against harmful interference in a residential installation. This equipment generates, uses, and can radiate radio frequency energy and, if not installed and used in accordance with the instructions, may cause harmful interference to radio communications. However, there is no guarantee that interference will not occur in a particular installation. If this equipment does cause harmful interference to radio or television reception, which can be determined by turning the equipment off and on, the user is encouraged to try to connect the interference by one or more of the following measures:

- Reorient or relocate the receiving antenna.
- Increase the separation between the equipment and receiver.
- Connect the equipment into an outlet on a circuit different from that to which the receiver is connected.
- Consult the dealer or an experienced radio/TV technician for help.

Argentina



Morocco

AGREE PAR L'ANRT MAROC

Numéro d'agrément: MR00003613ANRT2024

Date d'agrément: 22/08/2024

Australia



Table of Contents

Disclaimers and Regulatory Information 2
Chapter 1: Introduction 1–1
- Intended Use 1–1
- Getting Help 1–1
- Manual Conventions 1–2

Chapter 2: Safety 2–1
- General Safety 2–1
- Safety and Instructional Decals 2–1

Chapter 3: Setup 3–1
- Adjusting and Installing the Cutting Unit 3–1
  - Adjusting and Installing the Cutting Unit 3–1
  - Adjusting and Installing the Cutting Unit 3–2
- Installing the Transport-Wheel Shaft 3–3
- Installing the Transport Wheels 3–3
- Installing the Grass Basket 3–4
- Adjusting the Engine Speed 3–4
- Adjusting the Latch Bolt for the Handle-Height Adjuster 3–5

Chapter 4: Product Overview 4–1
- Controls 4–2
  - Engine Controls 4–6
- Specifications 4–10
- Attachments/Accessories 4–10

Chapter 5: Operation 5–1
- Before Operation 5–1
  - Before Operation Safety 5–1
  - Performing Daily Maintenance 5–2
  - Fuel 5–2
  - Adjusting the Clip Rate 5–3
  - Adjusting the Traction-Drum Position 5–4
- During Operation 5–5
  - During Operation Safety 5–5
  - Starting the Engine 5–6
  - Mowing Overview 5–7
  - Mowing Tips 5–7
  - Clutch Bail Engagement 5–8
  - Shutting Off the Engine 5–8
- After Operation 5–9
  - After Operation Safety 5–9
  - Operating the Machine after Mowing 5–9
  - Disengaging the Transmission 5–9
- Transporting the Machine 5–10
  - Installing the Transport Wheels 5–10
  - Transporting the Machine Using Transport Wheels 5–11
  - Removing the Transport Wheels 5–11
  - Hauling the Machine 5–12

Chapter 6: Maintenance 6–1
- Maintenance Safety 2
- Recommended Maintenance Schedule 3
- Daily Maintenance Checklist 4
- Pre-Maintenance Procedures 5
  - Preparing the Machine for Maintenance 5

Engine Maintenance 5
Engine Safety 5
Engine Oil Specifications 6
Checking the Engine-Oil Level 6
Changing the Engine Oil 7
Servicing the Air Cleaner 7
Servicing the Spark Plug 9
Controls Maintenance 10
Adjusting the Traction Cable 10
Adjusting the Service/Parking Brake 11
Adjusting the Reel-Control Cable 11
Adjusting the Throttle Cable 12
Cutting Unit Maintenance 13
Blade Safety 13
Installing the Cutting Unit 14
Removing the Cutting Unit 16
Backlapping Information 17
Chapter 7: Storage 7–1
Storage Safety 7–1
Storing the Machine 7–1

Intended Use

This machine is a walk-behind, reel-blade lawn mower intended to be used by professional, hired operators in commercial applications. It is primarily designed for cutting grass on well-maintained turf. Using this product for purposes other than its intended use could prove dangerous to you and bystanders.

Read this information carefully to learn how to operate and maintain your product properly and to avoid injury and product damage. You are responsible for operating the product properly and safely.

Getting Help

Visit www.Toro.com for product safety and operation training materials, accessory information, help finding a dealer, or to register your product.

Whenever you need service, genuine Toro parts, or additional information, contact an Authorized Service Dealer or Toro Customer Service and have the model and serial numbers of your product ready. These numbers are located on the serial plate on your product (1). Write the numbers in the space provided.

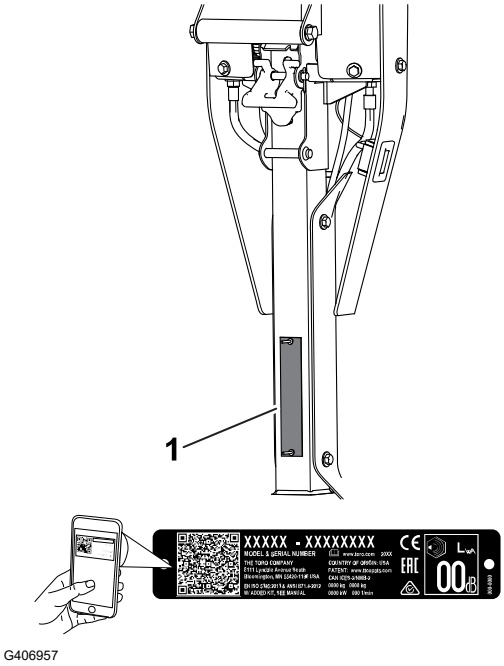

G406957

IMPORTANT

With your mobile device, you can scan the QR code on the serial number decal (if equipped) to access warranty, parts, and other product information.

Model Number:		**Serial Number:**	

Manual Conventions

This manual identifies potential hazards and has safety messages identified by the safety-alert symbol, which signals a hazard that may cause serious injury or death if you do not follow the recommended precautions.



G405934

This manual uses 2 words to highlight information. **Important** calls attention to special mechanical information and **Note** emphasizes general information worthy of special attention.

General Safety

This product is capable of amputating hands and feet and of throwing objects.

- Read and understand the contents of this *Operator's Manual* before starting the machine.
- Use your full attention while operating the machine. Do not engage in any activity that causes distractions; otherwise, injury or property damage may occur.
- Do not put your hands or feet near moving components of the machine.
- Do not operate the machine without all guards and other safety protective devices in place and functioning properly on the machine.
- Keep bystanders and children out of the operating area. Never allow children to operate the machine.
- Shut off the engine, remove the key (if equipped), and wait for all movement to stop before you leave the operator's position. Allow the machine to cool before adjusting, servicing, cleaning, or storing it.

Improperly using or maintaining this machine can result in injury. To reduce the potential for injury, comply with these safety instructions and always pay attention to the safety-alert symbol ⚠, which means Caution, Warning, or Danger—personal safety instruction. Failure to comply with these instructions may result in personal injury or death.

Safety and Instructional Decals

Safety decals and instructions are easily visible to the operator and are located near any area of potential danger. Replace any decal that is damaged or missing.

Decal Part: 120-9570

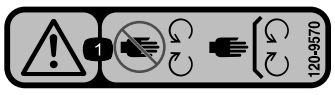

s_decal120-9570

1 Warning—stay away from moving parts, keep all guards and shields in place.

Decal Part: 130-8322

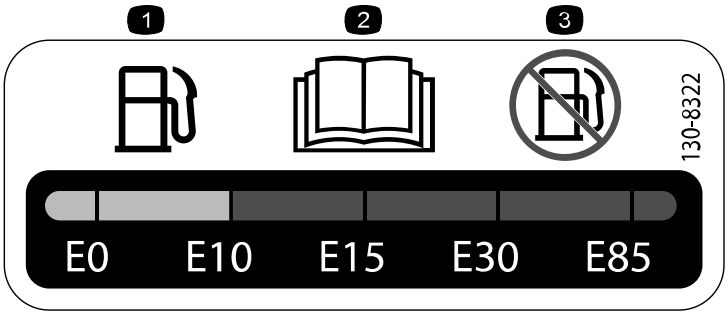

s_decal130-8322

(1) Use only fuel with an alcohol content by volume under 10%.

(2) Read the *Operator's Manual* for more information on fuel.

(3) Do not use fuel with an alcohol content by volume greater than 10%.

Decal Part: 133-8062



s_decal133-8062

Decal Part: 138-1589

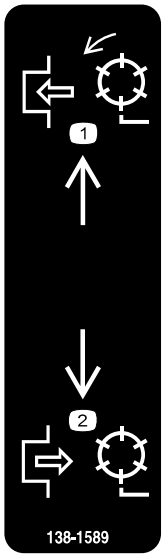

s_decal138-1589

(1) Engage the reels.

(2) Disengage the reels.

Decal Part: 138-1644

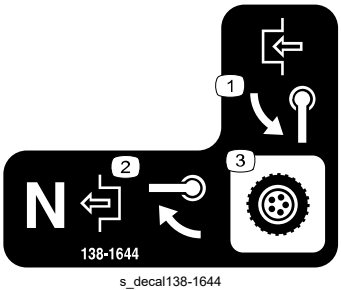

s_decal138-1644

(1) Rotate the handle to engage.

(2) With the machine in the Neutral position, rotate the handle to disengage.

(3) Transmission control

Decal Part: 138-2138

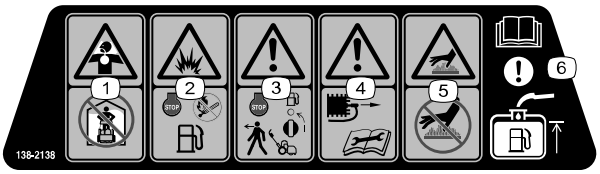

s_decal138-2138

1. Poisonous fumes or toxic gases, asphyxiation hazard—do not run the engine in an enclosed space.
2. Explosion hazard—shut off the engine before adding fuel; no fire, open flames, or smoking when adding fuel.
3. Warning—shut off the engine and close the fuel shutoff valve before leaving the machine.
4. Warning— disconnect the spark plug wire before performing maintenance.
5. Hot surface hazard—do not touch the hot surface.
6. Attention—read the *Operator's Manual* for information about filling the fuel tank.

Decal Part: 138-5532



s_decal138-5532

1. Pull up to release the brake.
2. Pull down to apply the brake.
3. Parking brake—locked
4. Parking brake—unlocked
5. Warning—read the *Operator's Manual*.
6. Warning—do not operate this machine unless you are trained.
7. Warning—wear hearing protection.
8. Thrown object hazard—keep bystanders away.
9. Warning—stay away from moving parts; keep all guards and shields in place.
10. Do not tow the machine.

Decal Part: 138-5533

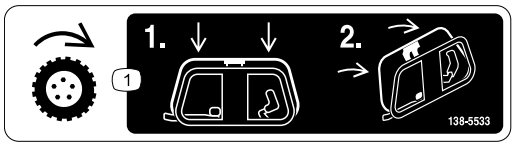

s_decal138-5533

1. Traction control—press the traction control down then pull it to the handle.

Decal Part: 138-5534

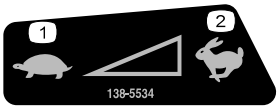

s_decal138-5534

1. Slow
2. Fast

Adjusting and Installing the Cutting Unit

Adjusting and Installing the Cutting Unit

Model 04820 Only

1	Cutting unit (order separately; contact your authorized Toro distributor)
1	Coupler
4	Socket-head screw

1. Remove the reel-drive assembly from the cutting-unit side plate.

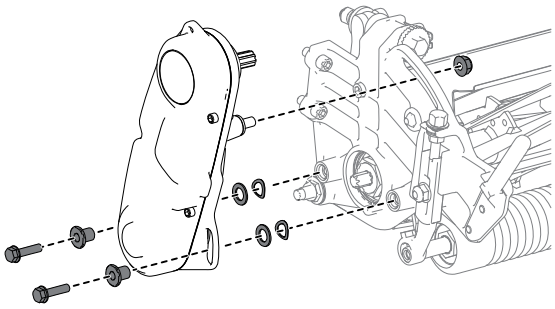

G403382

2. Use 4 socket-head screws (1) to install the cutting unit to the machine.
3. Adjust the traction drum for the desired height of cut.
4. Adjust the cutting unit to your desired settings; refer to the adjustment procedures in your cutting unit *Operator's Manual*.

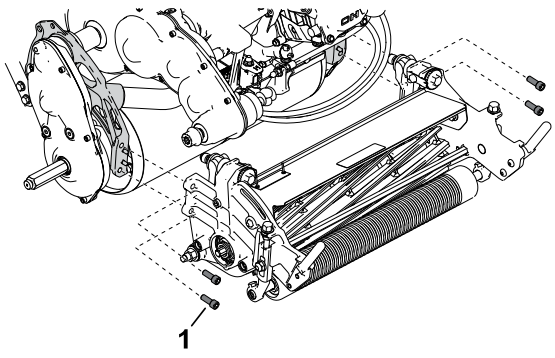

G403393

Adjusting and Installing the Cutting Unit (continued)

5. Install the coupler [1] to the transmission driveshaft.
6. Install the reel-drive assembly to the cutting unit.
7. Ensure that the coupler [1] can easily move back and forth on the transmission driveshaft.

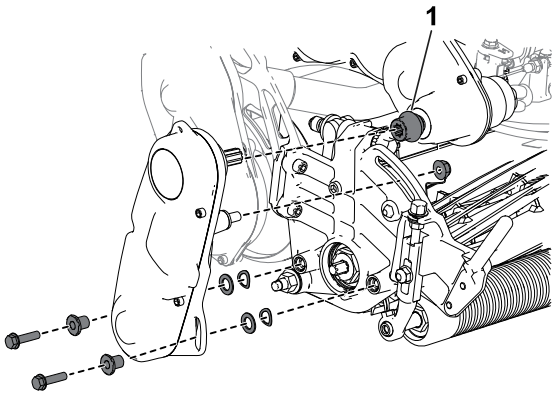

Adjusting and Installing the Cutting Unit

Models 04830 and 04840 Only

1	Cutting unit (order separately; contact your authorized Toro distributor)
1	Coupler
1	Spring
4	Socket-head screw

1. Use 4 socket-head screws [1] to install the cutting unit to the machine.
2. Adjust the traction drum for the desired height of cut.
3. Adjust the cutting unit to your desired settings; refer to the adjustment procedures in your cutting unit *Operator's Manual*.

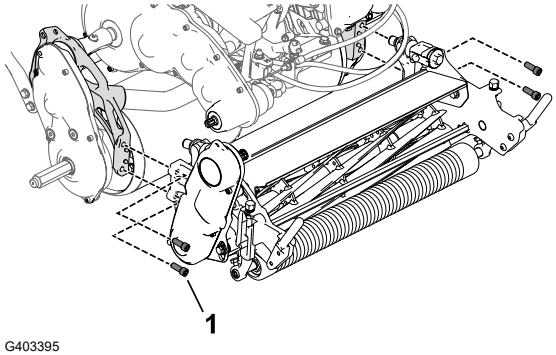

4. Install the coupler [1] and spring [2] to the reel-drive assembly [3] of the cutting unit.
5. Ensure that the coupler can easily move back and forth on the transmission driveshaft.

   Note: If the coupler cannot be moved, adjust the reel-drive-assembly position or the engine and transmission alignment; refer to Maintenance.

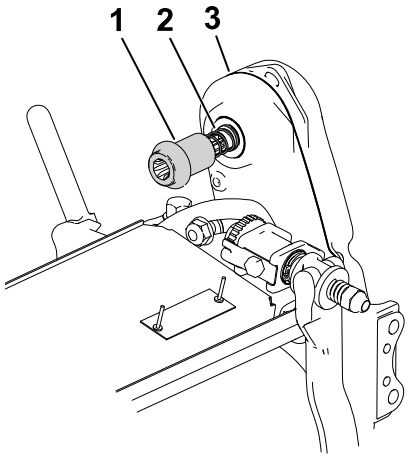

Installing the Transport-Wheel Shaft

Model 04840 Only

1	Left-wheel shaft

Note: The right-wheel shaft is installed at the factory.

1. Apply medium-strength thread-locking compound to the threads of the wheel shaft (1).
2. Thread the left-wheel shaft into the drum drive assembly on the left side of the machine.

   Note: The left-wheel shaft is marked with a “L” on the shaft end and has right-hand threads.

3. Torque the shaft to **54 to 68 N·m (40 to 50 ft-lb)**.

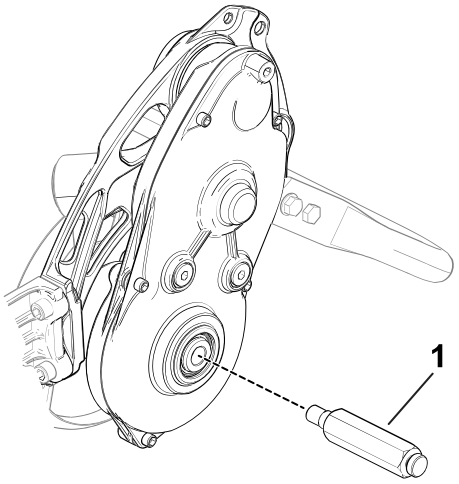

G403407

Installing the Transport Wheels

You can purchase an optional Transport Wheel Kit (Model 04123); contact your authorized Toro distributor.

1. Ensure that the tires are inflated to 83 to 103 kPa (12 to 15 psi).
2. Move the kickstand to the TRANSPORT-WHEEL-SERVICE position.
3. Slide a wheel onto an axle (1).
4. Pivot the wheel-locking clip (2) away from center of the wheel, allowing it to slide farther onto the axle.
5. Rotate the wheel back and forth until it slides completely onto the axle and the locking clip is secured in the groove on the axle shaft.
6. Repeat the procedure on the opposite side of the machine.
7. Carefully lower the machine off the kickstand.

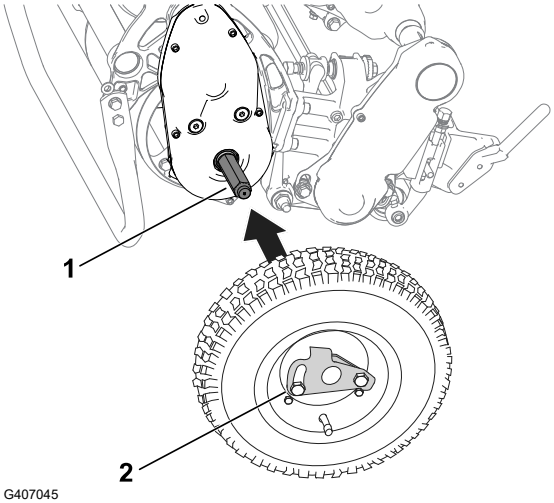

G407045

Installing the Grass Basket

Slide the basket ① onto the basket mounting rods ②.

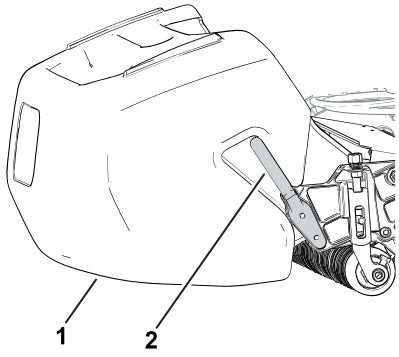

G402399

Adjusting the Engine Speed

For CE or UKCA Compliant Countries Only

1	CE/UKCA decal

If you use your machine in a country that complies to CE or UKCA standards, meet noise regulations by performing the following steps:

1. Adjust the high-idle engine speed to the following specifications:
   - 1018 machines: **3,000 rpm**
   - 1021 and 1026 machines: **3,150 rpm**
2. Install the CE/UKCA decal ② below the serial plate ①.

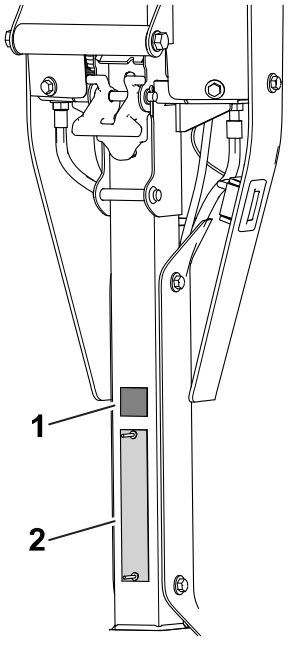

G420687

Adjusting the Latch Bolt for the Handle-Height Adjuster

If the handle-height adjuster is not parallel with the upper receiver weldment, perform the following steps to adjust the bolt:

1. Loosen the nut ① on the latch bolt ③ so that the bolt head can move freely just beyond the pivot stop ②.

   Note: You can apply pressure to the handle-height-adjuster spring to reduce tension on the bolt.

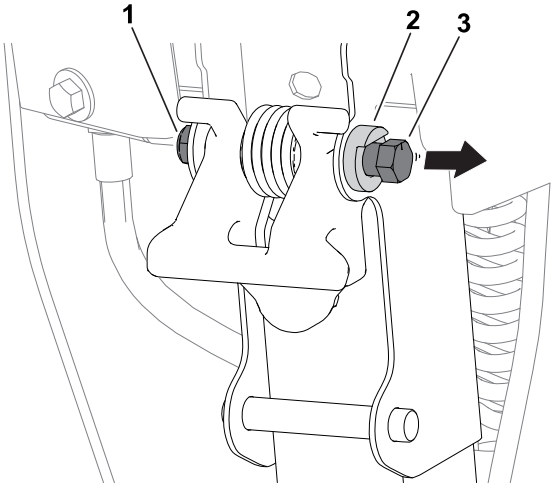

G440770

2. Rotate the bolt clockwise ③ or counter-clockwise ④ to adjust the angle of the handle-height adjuster ② in or out. The handle-height adjuster should be parallel to the upper receiver weldment ①.
3. Tighten the nut on the latch bolt so that the new bolt position is secured against the pivot stop.

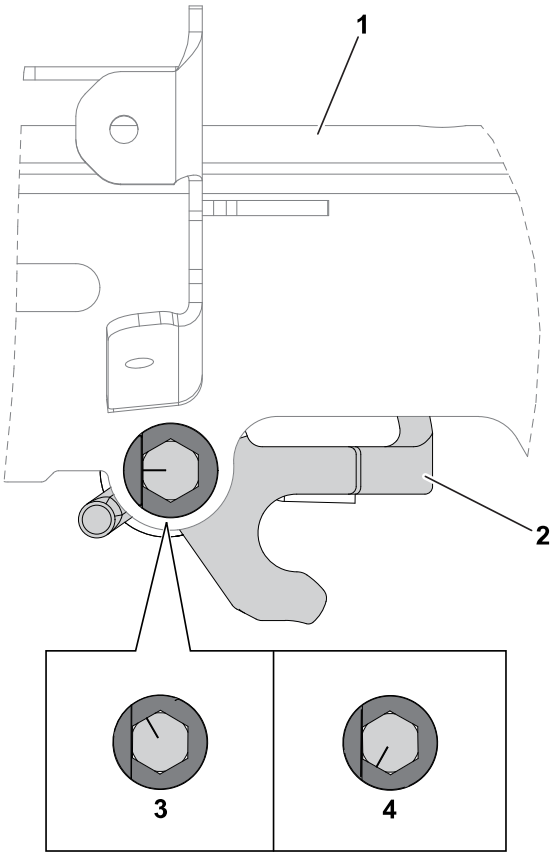

G440771

Chapter 4

Product Overview

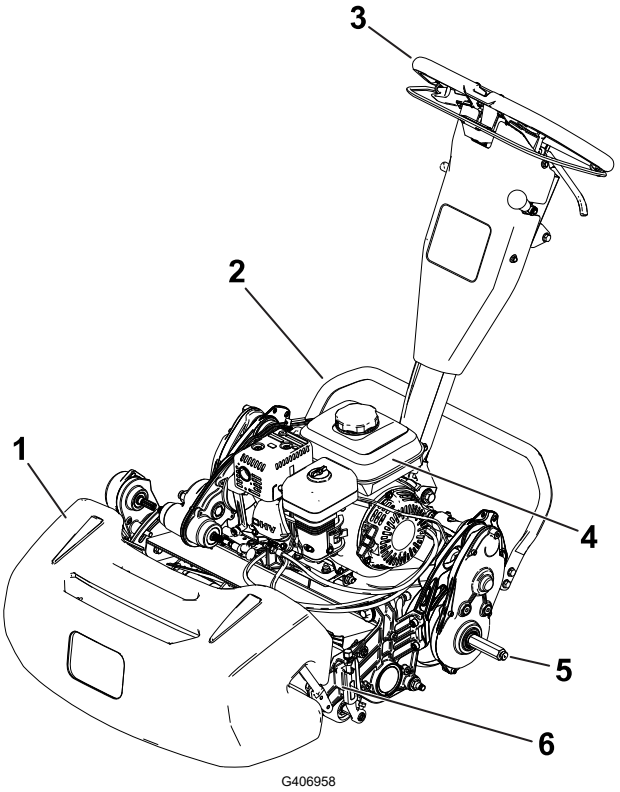

G406958

1. Grass basket
2. Kickstand
3. Handle
4. Fuel tank
5. Transport wheel axle
6. Cutting unit

Controls

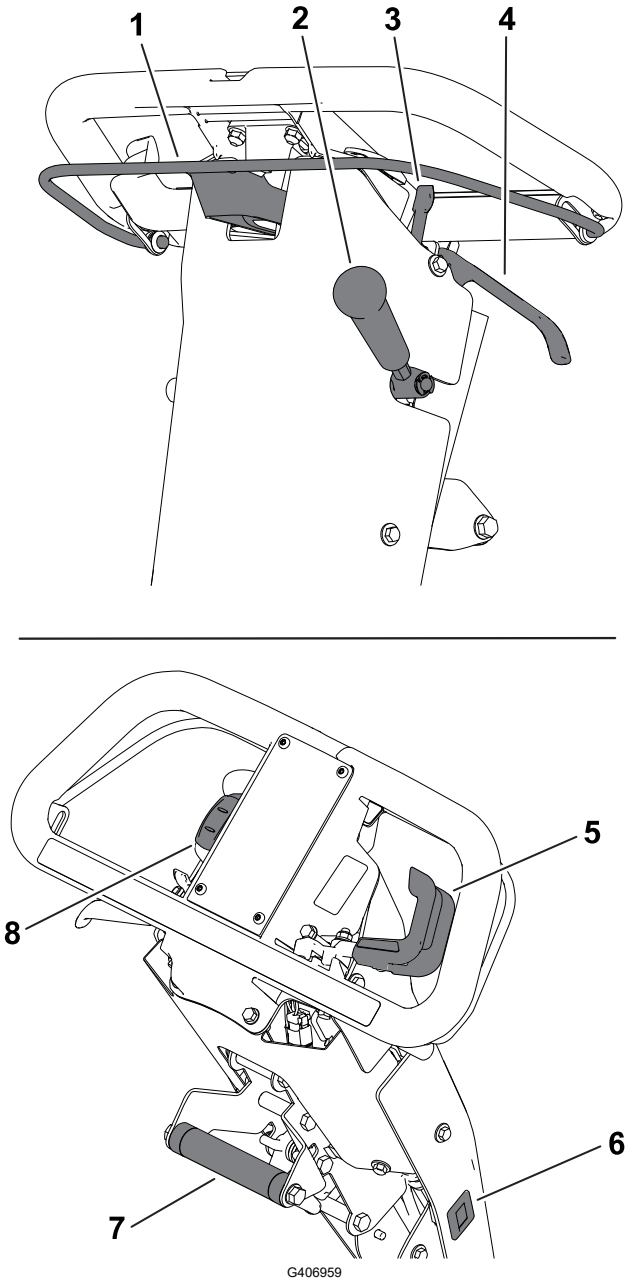

1. Clutch bail
2. Cutting-unit-drive lever
3. Parking-brake latch
4. Service-brake lever
5. Throttle control
6. Hour meter
7. Lift-assist handle
8. On/Off switch

Clutch Bail

Use the clutch bail to engage or disengage the traction drive.

- **Engage the traction drive** (A)**:** Pull up and hold the bar to the handle.
- **Disengage the traction drive** (B)**:** Release the bar.

Clutch Bail (continued)

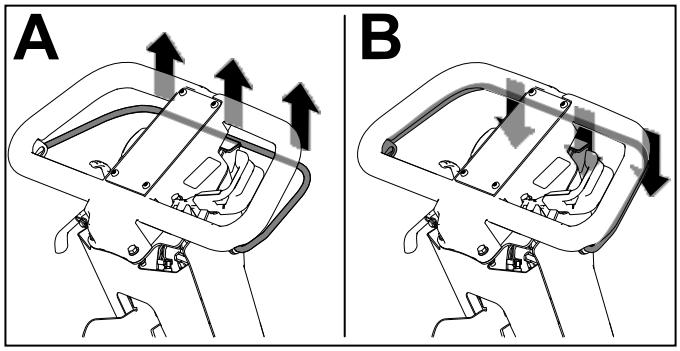

G404693

Reel Speed Control

Use the reel-speed-control knob to engage adjust the reel speed.

- **High reel speed:** Rotate the knob so that the “H” on the knob is directed toward the front of the machine.
- **Low reel speed:** Rotate the knob so that the “L” on the knob is directed toward the front of the machine.

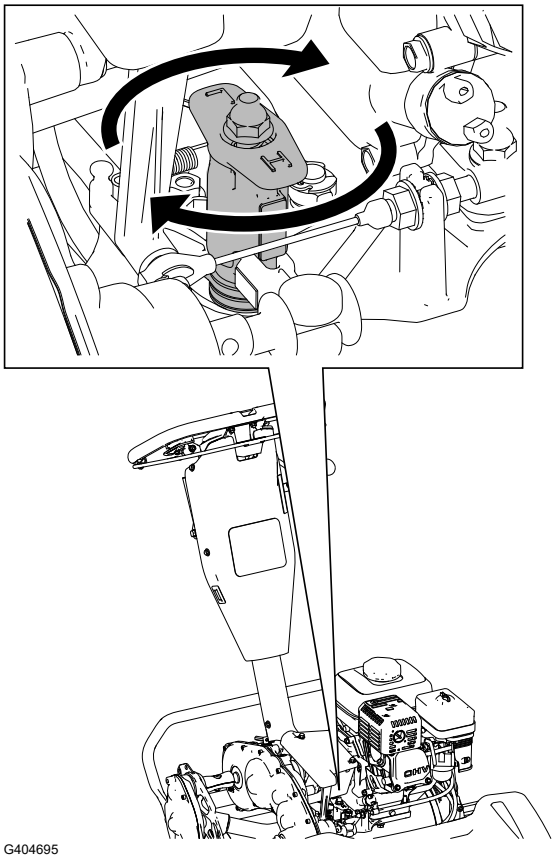

G404695

Throttle Control

- **Decrease the engine speed** ①**:** Rotate the lever up.
- **Increase the engine speed** ②**:** Rotate the lever down.

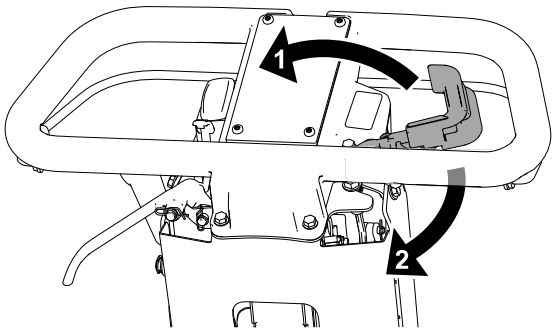

G404697

On/Off Switch

- **Start the engine** ①**:** Push the upper part of the switch.
- **Shut off the engine** ②**:** Push the lower part of the switch.

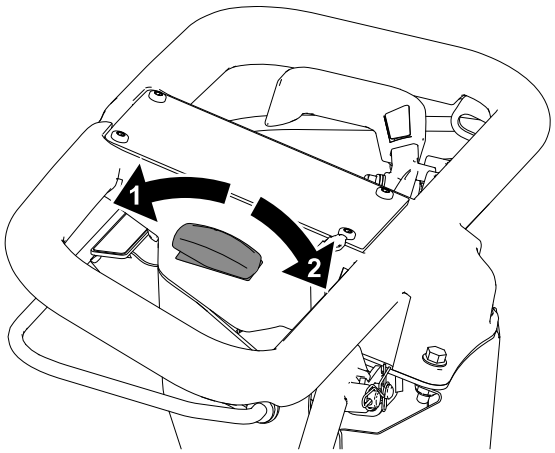

G404698

Service-Brake Lever

Pull the service-brake lever toward the handle to slow or stop the machine.

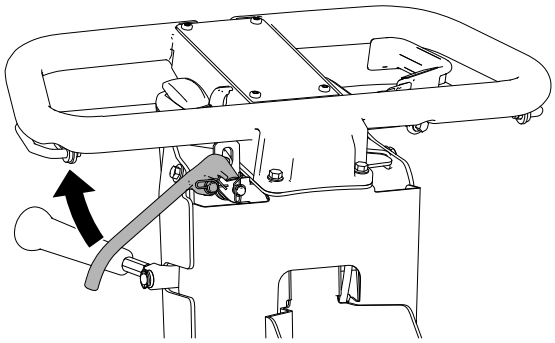

G404699

Parking-Brake Latch

- **Engage the parking brake** ①**:** Rotate the parking-brake latch toward you while the service-brake lever is engaged.
- **Disengage the parking brake** ②**:** Pull the service-brake lever toward the handle.

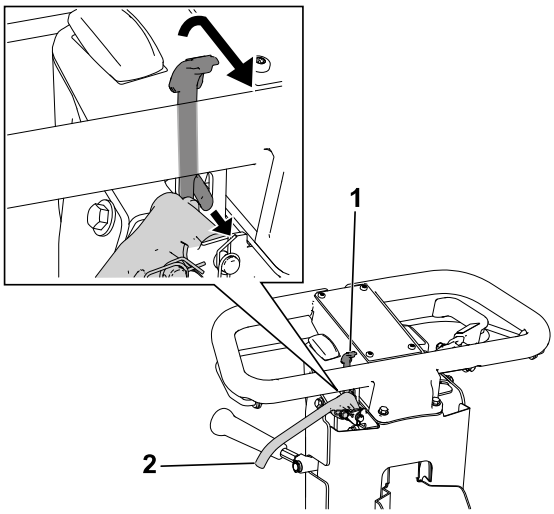

G404700

Cutting-Unit-Drive Lever

Use the cutting-unit-drive lever to engage or disengage the cutting unit while the clutch bail is engaged.

- **Engage the cutting unit** ②**:** Move the lever down.
- **Disengage the cutting unit** ①**:** Move the lever up.

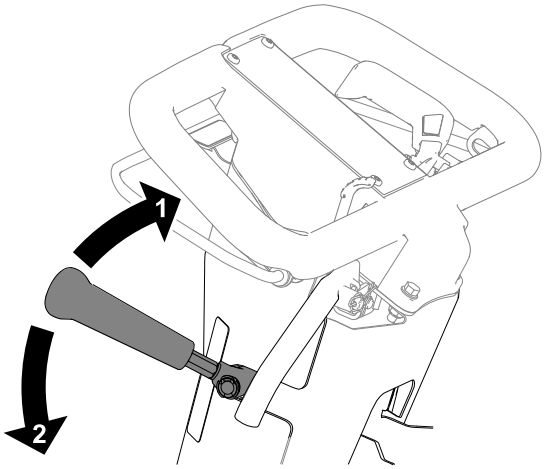

G404701

Hour Meter

The hour meter records the total running time of the engine to assist in scheduling regular maintenance.

Handle-Height Adjuster

Pull up on the handle-height adjuster (1) and raise or lower the handle height to a comfortable operating position.

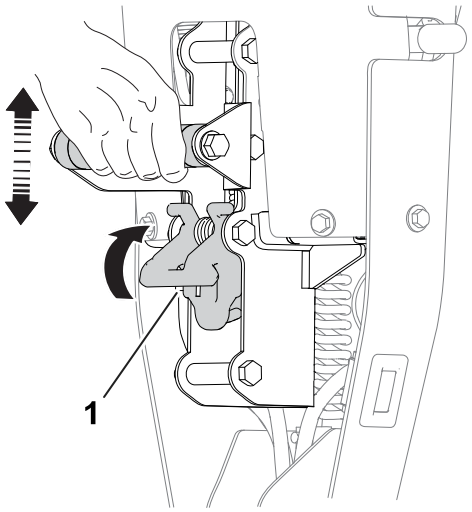

Engine Controls

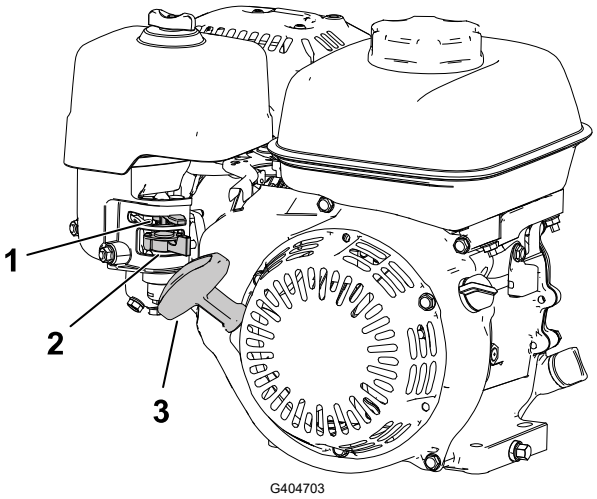

(1) Choke lever

(2) Fuel-shutoff valve

(3) Recoil-starter handle

Engine Controls (continued)

Choke Lever

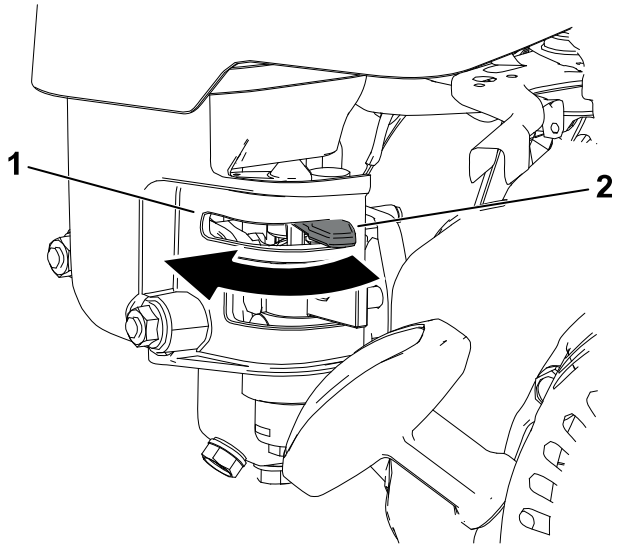

G404704

(1) ENGAGE the choke before starting a cold engine.

(2) DISENGAGE the choke when the engine is warm.

Engine Controls (continued)

Fuel-Shutoff Valve

Close the fuel-shutoff valve when the machine is not used for a few days, during transport to and from the job site, or when the machine is parked inside a building.

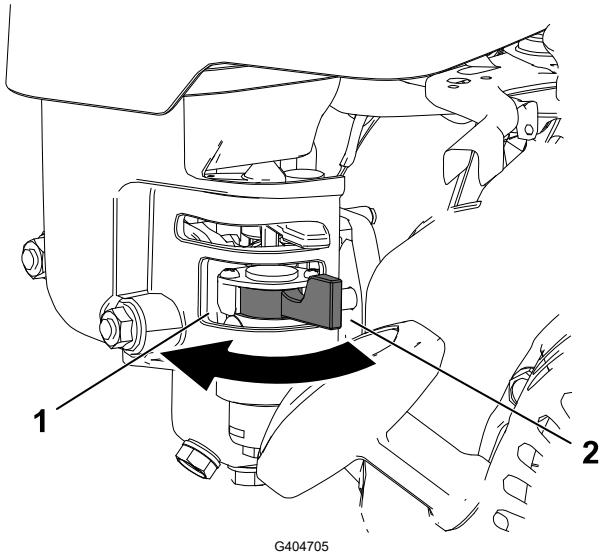

1 Closed
2 Open

Recoil-Starter Handle

Pull the recoil-starter handle to start the engine.

Kickstand

Use the kickstand when you install or remove the transport wheels or the cutting unit.

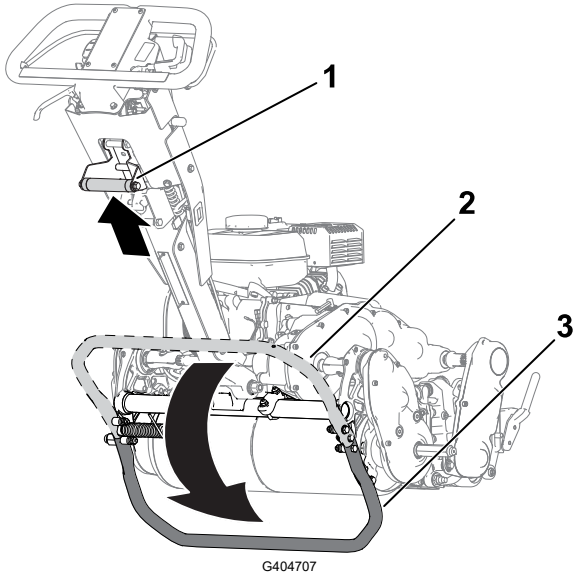

Kickstand (continued)

CAUTION

The machine is heavy and can cause back strain if lifted improperly.

Put your foot pressure down on the kickstand and use only the lift-assist handle to raise the machine. Attempting to raise the machine onto the kickstand any other way can cause injury.

- **Transport-Wheel-Service position (3):**

  To use the kickstand to install the transport wheels, put your foot on the kickstand while pulling up and back on the lift-assist handle (1).

- **Storage position (2):**

  1. Keep your foot on the kickstand while lowering the traction drum to the ground.
  2. Remove your foot from the kickstand and allow space for the kickstand to retract to the Storage position.

- **Cutting-Unit-Service position (1):**

  To prevent the machine from tipping backward when removing the cutting unit, lower the kickstand and push out the spring pin (2) so that it keeps the kickstand in position.

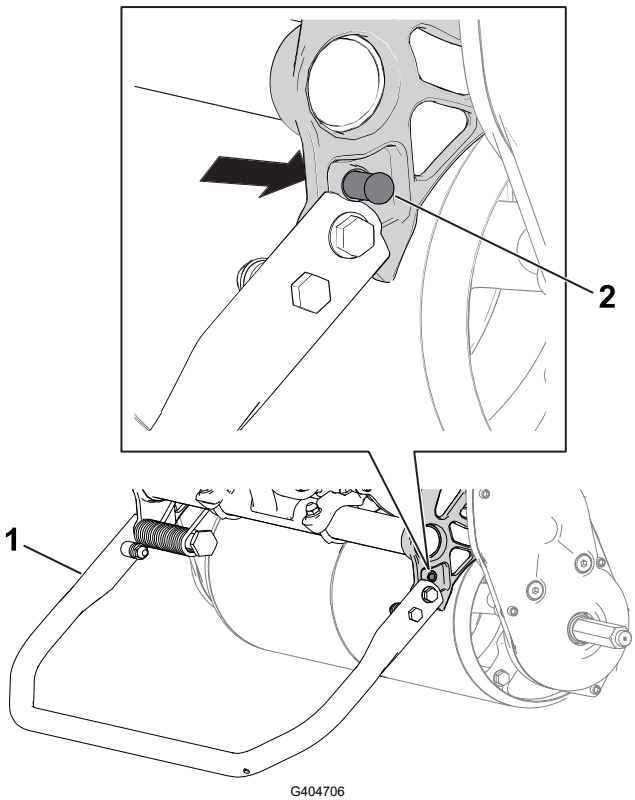

(1) Kickstand—Cutting-Unit Service position

(2) Spring pin

Specifications

Note: Specifications and design are subject to change without notice.

	Model 04820	Model 04830	Model 04840
Width	84 cm (33 inches)	91 cm (36 inches)	104 cm (41 inches)
Dry weight*	95 kg (210 lb)	100 kg (220 lb)	107 kg (235 lb)
Width of cut	46 cm (18 inches)	53 cm (21 inches)	66 cm (26 inches)
Height of cut	Dependent on traction-drum position and use of High Height-of-Cut Kit.		
Clip	Dependent on reel speed and reel-drive-pulley position.		
Engine speed	Low idle: 1,900 ± 100 rpm; High idle: 3,450 ± 100 rpm		
Mowing speed	3.2 km/h (2 mph) to 5.6 km/h (3.5 mph)		
Transport speed	8.5 km/h (5.3 mph)		
*Traction unit only. Refer to the cutting unit *Operator's Manual* for the weight of each cutting unit.			

Attachments/Accessories

A selection of Toro approved attachments and accessories is available for use with the machine to enhance and expand its capabilities. Contact your Authorized Service Dealer or authorized Toro distributor or go to www.Toro.com for a list of all approved attachments and accessories.

To ensure optimum performance and continued safety certification of the machine, use only genuine Toro replacement parts and accessories.

Before Operation

Before Operation Safety

General Safety

- Never allow children or untrained people to operate or service the machine. Local regulations may restrict the age of the operator. The owner is responsible for training all operators and mechanics.
- Become familiar with the safe operation of the equipment, operator controls, and safety signs.
- Shut off the machine, remove the key (if equipped), and wait for all movement to stop before you leave the operator's position. Allow the machine to cool before adjusting, servicing, cleaning, or storing it.
- Know how to stop the machine and shut off the machine quickly.
- Check that operator-presence controls, safety switches, and safety protective devices are attached and functioning properly. Do not operate the machine unless they are functioning properly.
- Inspect the area where you will use the machine and remove all objects that the machine could throw.

Fuel Safety

- Use extreme care in handling fuel. It is flammable and its vapors are explosive.
- Extinguish all cigarettes, cigars, pipes, and other sources of ignition.
- Use only an approved fuel container.
- Do not remove the fuel cap or add fuel to the tank while the engine is running or hot.
- Do not add or drain fuel in an enclosed space.
- Do not store the machine or fuel container where there is an open flame, spark, or pilot light, such as on a water heater or other appliance.
- If you spill fuel, do not attempt to start the engine; avoid creating a source of ignition until the fuel vapors have dissipated.
- Do not fill containers inside a vehicle or on a truck or trailer bed with a plastic liner. Always place containers on the ground, away from the vehicle before filling.
- Remove equipment from the truck or trailer and refuel it on the ground. If this is not possible, refuel such equipment with a portable container rather than from a fuel-dispenser nozzle.

Before Operation Safety (continued)

- Keep the nozzle in contact with the rim of the fuel tank or container operating at all times until fueling is complete.

Performing Daily Maintenance

Before starting the machine each day, perform the Each Use/Daily procedures listed in the Maintenance Schedule.

Fuel

Fuel Specifications

Capacity	2.0 L (0.59 US gallons)
Type	Unleaded gasoline
Minimum octane rating	87 (US) or 91 (research octane; outside the US)
Ethanol	No more than 10% by volume
Methanol	None
MTBE (methyl tertiary butyl ether)	Less than 15% by volume
Oil	Do not add to the fuel

Use only clean, fresh (no more than 30 days old), fuel from a reputable source.

IMPORTANT

To reduce starting problems, add fuel stabilizer/conditioner to fresh fuel as directed by the fuel-stabilizer/conditioner manufacturer.

Fuel (continued)

Filling the Fuel Tank

1. Clean around the fuel-tank cap ① and remove the cap from the tank.

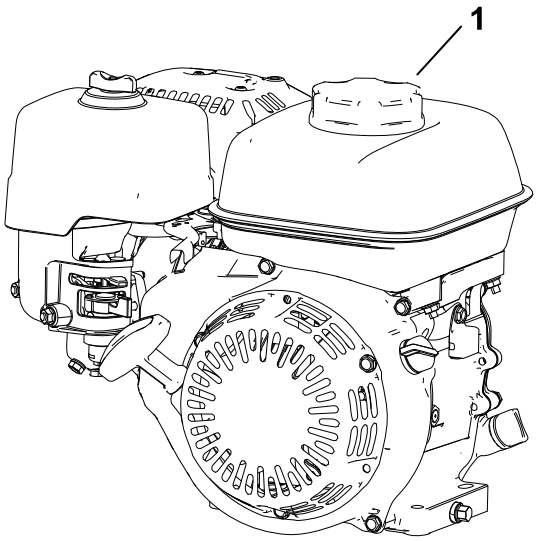

G404710

2. Add the recommended fuel to the full level ② (i.e., to the bottom of the fuel gauge ①) in the fuel tank.

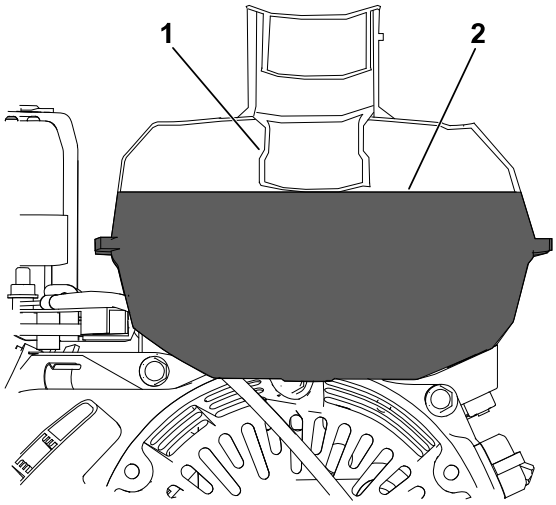

G404711

IMPORTANT

Do not fill the tank above this level.

3. Install the fuel-tank cap and wipe up any spilled fuel.

Adjusting the Clip Rate

1. Determine the appropriate clip rate per the following table:

Adjusting the Clip Rate (continued)

Clip Rate

Reel Speed	Pulley Position	Cutting Unit		
		8-blade	11-blade	14-blade
Low	Low	7.3 mm (0.286 inch)	5.3 mm (0.208 inch)	4.2 mm (0.164 inch)
Low	High	6.1 mm (0.241 inch)	4.4 mm (0.175 inch)	3.5 mm (0.137 inch)
High	Low	5.9 mm (0.233 inch)	4.3 mm (0.169 inch)	3.4 mm (0.133 inch)
High	High	5.0 mm (0.196 inch)	3.6 mm (0.142 inch)	2.8 mm (0.112 inch)

2. Adjust the reel speed control to the HIGH or LOW setting as needed.
3. Set the reel-drive pulley on the cutting unit to the HIGH or LOW position as needed; refer to your cutting unit *Operator's Manual*.

Adjusting the Traction-Drum Position

The traction drum can be adjusted to 2 positions:

- **LOW** position ①: Use this position for mowing at a lower height of cut (e.g., mowing a golf-course green).
- **HIGH** position ②: Use this position for mowing at a higher height of cut (e.g., mowing a golf-course tee box).

1. Move the kickstand to the TRANSPORT–WHEEL SERVICE position.
2. Remove the shoulder bolts ③ on each side of the machine that secure the drum drive housing to the chassis.
3. Align the holes in the chassis with the holes in the drive housing.
4. Use the previously removed shoulder bolts to secure the drive housing to the chassis.
5. Move the kickstand to the STORAGE position.

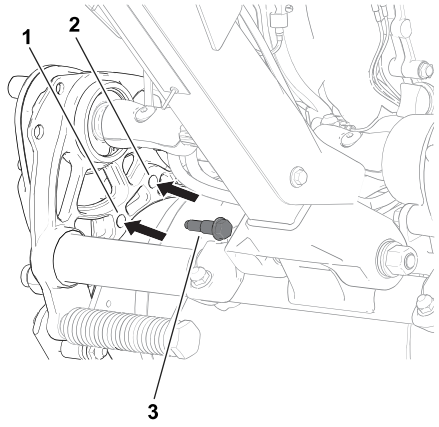

G404712

During Operation

During Operation Safety

General Safety

- The owner/operator can prevent and is responsible for accidents that may cause personal injury or property damage.
- Wear appropriate clothing, including eye protection; long pants; substantial, slip-resistant footwear; and hearing protection. Tie back long hair and do not wear loose clothing or loose jewelry.
- Do not operate the machine while ill, tired, or under the influence of alcohol or drugs.
- Use your full attention while operating the machine. Do not engage in any activity that causes distractions; otherwise, injury or property damage may occur.
- Before you start the machine, ensure that all drives are in neutral, the parking brake is engaged, and you are in the operating position.
- Keep bystanders and children out of the operating area. If co-workers must be present, use caution and ensure that the grass basket is installed on the machine.
- Operate the machine only in good visibility to avoid holes or hidden hazards.
- Do not operate the machine when there is the risk of lightning.
- Use care when mowing on wet grass. Poor footing could cause a slip-and-fall accident.
- Keep your hands and feet away from the cutting unit.
- Look behind and down before backing up to be sure of a clear path.
- Use care when approaching blind corners, shrubs, trees, or other objects that may obscure your vision.
- Stop the cutting unit whenever you are not mowing.
- Disengage the drive to the cutting unit and shut off the machine before adjusting the height of cut.
- Never run an engine in an area where exhaust gasses are enclosed.
- Never leave a running machine unattended.
- Before you leave the operator’s position, do the following:
  - Park the machine on a level surface.
  - Disengage the cutting unit(s).
  - Engage the parking brake.
  - Shut off the machine and remove the key (if equipped).
  - Wait for all movement to stop.
- Shut off the machine before emptying the basket.
- Do not touch the engine, muffler, or exhaust pipe while the engine is running or soon after it has shut off because these areas could be hot enough to cause burns.
- Shut off the machine and disengage the drive to the cutting unit in the following situations:

During Operation Safety (continued)

  - Before fueling
  - Before clearing blockages
  - Before removing the grass basket
  - Before checking, cleaning, or maintaining the cutting unit
  - After striking a foreign object or if an abnormal vibration occurs. Inspect the cutting unit for damage and make repairs before starting and operating the machine
  - Before leaving the operating position
- Use only accessories and attachments approved by The Toro® Company.

Slope Safety

- Slopes are a major factor related to loss of control and rollover accidents, which can result in severe injury or death. You are responsible for safe slope operation. Operating the machine on any slope requires extra caution. Before using the machine on a slope, do the following:
  - Review and understand the slope instructions in the manual and on the machine.
  - Evaluate the site conditions of the day to determine if the slope is safe for machine operation. Use common sense and good judgment when performing this evaluation. Changes in the terrain, such as moisture, can quickly affect the operation of the machine on a slope.
- Operate across slopes, never up and down. Avoid operation on excessively steep or wet slopes. Poor footing could cause a slip-and-fall accident.
- Identify hazards at the base of the slope. Do not operate the machine near drop-offs, ditches, embankments, water, or other hazards. The machine could suddenly roll over if a wheel goes over the edge or the edge collapses. Keep a safe distance between the machine and any hazard. Use a handheld tool to operate in these areas.
- Avoid starting, stopping, or turning the machine on slopes. Avoid making sudden changes in speed or direction; turn slowly and gradually.
- Do not operate a machine under any conditions where traction, steering, or stability is in question. Be aware that operating the machine on wet grass, across slopes, or downhill may cause the machine to lose traction. Loss of traction to the drive may result in sliding and a loss of braking and steering. The machine can slide even if you stop the drive.
- Remove or mark obstacles such as ditches, holes, ruts, bumps, rocks, or other hidden hazards. Tall grass can hide obstacles. Uneven terrain could overturn the machine.
- If you lose control of the machine, step away from the direction of travel of the machine.
- Always keep the machine in gear when going down slopes. Do not coast downhill (applicable only to gear-drive units).

Starting the Engine

Note: Ensure that the spark-plug wire is installed on the spark plug.

1. Ensure that the traction-drive lever is in the NEUTRAL position.

Starting the Engine (continued)

2. Ensure that the fuel-shutoff valve is open
3. Move the On/Off switch to the ON position.
4. Use the throttle control to increase the engine speed.
5. Move the choke lever halfway between the CHOKE and RUN positions when starting a cold engine.

   Note: The choke may not be required when starting a warm engine.
6. Pull the recoil-start handle out until positive engagement results, then pull it vigorously to start the engine.

IMPORTANT

Do not pull the recoil rope to its limit or let go of the starter handle when the rope is pulled out; the rope may break or the recoil assembly may be damaged.

7. Move the choke lever to the RUN position as the engine warms up.

Mowing Overview

1. Transport the machine to the area of operation.
2. Start the engine, set the throttle to a reduced speed, push down on the handle to raise the cutting unit, and engage the traction drive to move the machine onto the collar of the green.
3. Stop the machine on the collar.
4. Use the cutting-unit-drive lever to engage the cutting unit, increase the throttle speed until the machine is traveling at the desired ground speed, engage the traction drive to move the machine onto the green, lower the cutting unit to the ground, and begin mowing.

Mowing Tips

IMPORTANT

Grass clippings act as a lubricant when mowing. Operating the cutting unit excessively without grass clippings can damage the cutting unit.

- Mow the greens in a straight back-and-forth direction across the green.
- Avoid circular mowing or turning the machine on the greens areas to prevent scuffing.

Mowing Tips (continued)

- Turn the machine off the green by raising the cutting reel (pushing the handle down) and performing a tear-shaped turn on the traction drum.
- Mow at a normal walking pace. Fast speeds saves little time and results in an inferior mowing job.

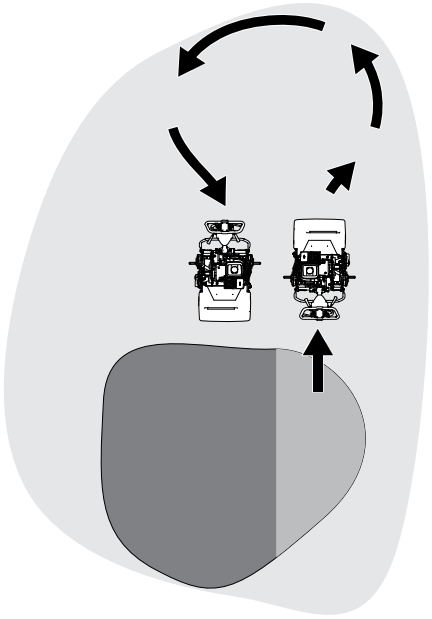

G404724

- To assist in maintaining a straight line across the green and to keep the machine an equal distance from the edge of the previous cut, use the alignment stripes on the basket (1) .

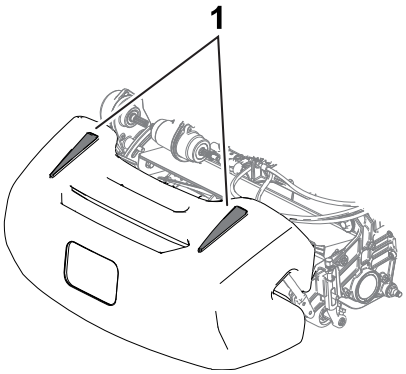

G404725

Clutch Bail Engagement

Follow these tips to reduce the risk of damage to the friction disc due to the clutch slipping.

- Keep the clutch bail fully engaged during operation.
- Partial engagement is acceptable while loading on trailers or when small movements are necessary.
- Set the throttle to the desired walking speed with a fully engaged bail.

  Note: The clip rate stays consistent regardless of engine speed.
- For improved control during teardrop shaped turns between mowing passes, reduce the engine speed using the throttle control.

Shutting Off the Engine

1. Release the clutch bail.

Shutting Off the Engine (continued)

2. Move the throttle control to the SLOW position.
3. Move the On/Off switch to the OFF position.
4. Close the fuel-shutoff valve before you store or transport the machine

After Operation

After Operation Safety

General Safety

- Shut off the machine, remove the key (if equipped), and wait for all movement to stop before you leave the operator's position. Allow the machine to cool before adjusting, servicing, cleaning, or storing it.
- Clean grass and debris from the machine to help prevent fires. Clean up oil or fuel spills.
- Allow the machine to cool before storing the machine in any enclosure.
- Do not store the machine or fuel container where there is an open flame, spark, or pilot light, such as on a water heater or on other appliances.
- Reduce the throttle setting before shutting off the engine and turn off the fuel-shutoff valve (if equipped) after mowing.

Operating the Machine after Mowing

1. Drive the machine off of the green, push down on the handle to raise the cutting unit, release the clutch bail, disengage the cutting unit, and shut off the engine.
2. Remove the grass basket and empty the basket of clippings.
3. Install the grass basket on the machine and transport the machine to storage.

Disengaging the Transmission

You can disengage the drum from the transmission to allow the machine to be maneuvered. Disengage the transmission when you need to move the machine without starting it (e.g., performing maintenance in an enclosed area). Before you operate the machine, ensure that you engage the transmission.

Disengaging the Transmission (continued)

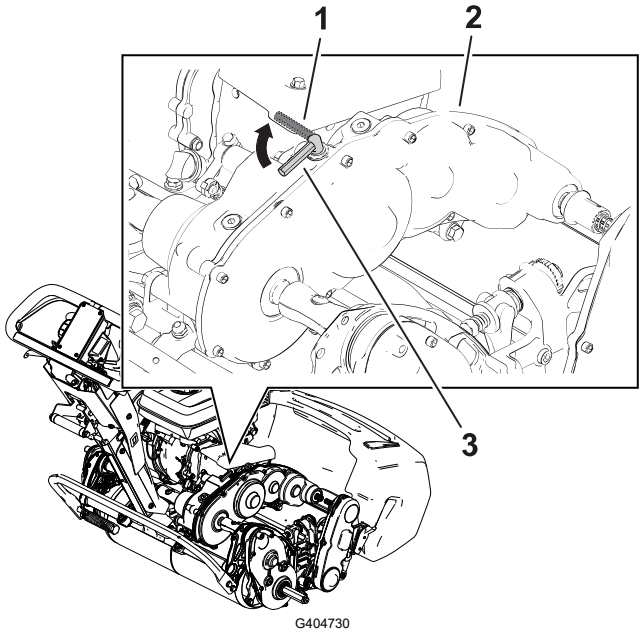

G404730

(1) Traction-engagement lever—DISENGAGED position

(2) Transmission gearbox

(3) Traction-engagement lever—ENGAGED position

Transporting the Machine

Installing the Transport Wheels

You can purchase an optional Transport Wheel Kit (Model 04123); contact your authorized Toro distributor.

1. Ensure that the tires are inflated to 83 to 103 kPa (12 to 15 psi).
2. Move the kickstand to the TRANSPORT-WHEEL-SERVICE position.
3. Slide a wheel onto an axle (1).
4. Pivot the wheel-locking clip (2) away from center of the wheel, allowing it to slide farther onto the axle.
5. Rotate the wheel back and forth until it slides completely onto the axle and the locking clip is secured in the groove on the axle shaft.
6. Repeat the procedure on the opposite side of the machine.
7. Carefully lower the machine off the kickstand.

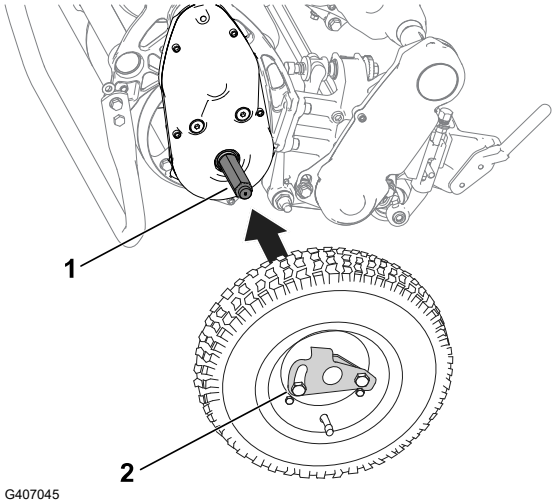

G407045

Transporting the Machine Using Transport Wheels

Use the transport wheels to transport the machine a shorter distance.

1. Install the transport wheels.
2. Ensure that the traction and reel-drive controls are in the NEUTRAL position.
3. Start the engine and set the throttle control to SLOW.
4. Tip the front of the machine up and gradually engage the traction drive.
5. Adjust the throttle to operate the mower at the desired ground speed and transport the machine to the desired destination.

Removing the Transport Wheels

1. Release the clutch bail, use the throttle control to lower the engine speed, and shut off the engine.
2. Move the kickstand to the TRANSPORT-WHEEL-SERVICE position.
3. Remove the transport wheels by pushing the wheel-locking clips ② out of the axles ①.
4. Carefully lower the machine off of the kickstand by pushing forward slowly or by lifting the lower handle support, allowing the kickstand to spring back to the STORAGE position..

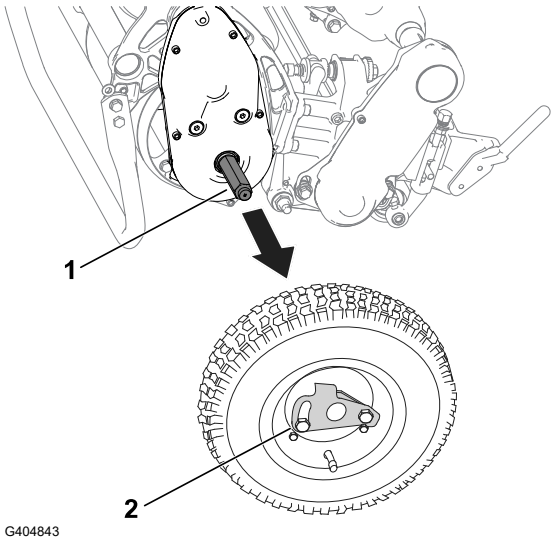

Hauling the Machine

Use a trailer to transport the machine a considerable distance. Use caution while loading and unloading the machine onto the trailer.

Note: You can use the Toro Trans Pro trailer to transport the machine. For instructions on loading the trailer, refer to your trailer *Operator's Manual*.

1. Carefully drive the machine onto the trailer.
2. Shut off the engine, engage the parking brake, and turn the fuel valve to the OFF position.

IMPORTANT

Do not run the engine while transporting it on a trailer because damage can occur to the machine.

3. Use a full-width ramp for loading the machine into a trailer or truck.
4. Securely fasten the machine to the trailer.

Chapter 6

Maintenance

WARNING

Failure to properly maintain the machine could result in premature failure of machine systems, causing possible harm to you or bystanders.
Keep the machine well maintained and in good working order as indicated in these instructions.

Note: Determine the left and right sides of the machine from the normal operating position.

IMPORTANT

Do not tip the machine at an angle greater than 25°. Tipping the machine beyond 25° leads to oil leaking into the combustion chamber and/or fuel leaking out of the fuel-tank cap.

IMPORTANT

Refer to your engine owner's manual for additional maintenance procedures.

Maintenance Safety

- Before you leave the operator’s position, do the following:
  - Park the machine on a level surface.
  - Move the throttle to the low-idle position.
  - Disengage the cutting unit(s).
  - Ensure that the traction is in neutral.
  - Engage the parking brake.
  - Shut off the machine and remove the key (if equipped).
  - Wait for all movement to stop.
- Allow machine components to cool before performing maintenance.
- If possible, do not perform maintenance while the machine is running. Keep away from moving parts.
- If the engine must be running to perform a maintenance adjustment, keep your hands, feet, clothing, and any parts of the body away from the cutting unit, attachments, and any moving parts. Keep bystanders away.
- Clean grass and debris from the cutting unit, drive, muffler, cooling screen, and the engine to help prevent fires. Clean up oil or fuel spills.
- Keep all parts in good working condition. Replace all worn, damaged, or missing parts and decals. Keep all hardware tight to ensure that the machine is in safe working condition.
- Check the grass catcher components frequently and replace them when necessary.
- To ensure safe, optimal performance of the machine, use only genuine Toro replacement parts. Replacement parts made by other manufacturers could be dangerous, and such use could void the product warranty.
- If major repairs are ever needed or if assistance is desired, contact an authorized Toro distributor.

Recommended Maintenance Schedule

Maintenance Service Interval	Maintenance Procedure	Part No.	Qty	Description
After the first 20 hours	Change the engine oil.	38280	1	Premium Engine Oil 10w30 —Bottle (946 ml or 32 fl oz)
		121-6393	1	Premium Engine Oil 10w30 —Pail (18.9 L or 5 US gallons)
		121-6392	1	Premium Engine Oil 10w30 —Drum (208.2 L or 55 US gallons)
Before each use or daily	Check the engine-oil level.	-	-	-
	Inspect the air-filter elements.	-	-	-
Every 50 hours	Clean the air-filter elements.	-	-	-
Every 100 hours	Change the engine oil.	38280	1	Premium Engine Oil 10w30 —Bottle (946 ml or 32 fl oz)
		121-6393	1	Premium Engine Oil 10w30 —Pail (18.9 L or 5 US gallons)
		121-6392	1	Premium Engine Oil 10w30 —Drum (208.2 L or 55 US gallons)
	Inspect and adjust the spark plug; replace it if necessary.	-	1	Spark plug; obtain from Honda
Every 300 hours	Replace the paper filter element (More frequently in dusty operating conditions).	-	1	Paper filter element; obtain from Honda
	Replace the spark plug.	-	1	Spark plug; obtain from Honda
Yearly	Adjust the traction cable.	-	-	-

Daily Maintenance Checklist

Duplicate this page for routine use.

Maintenance Check Item	For the week of:						
	Mon.	Tues.	Wed.	Thurs.	Fri.	Sat.	Sun.
Check the brake-lock-lever operation.							
Check the fuel level.							
Check the engine-oil level.							
Check the air filter.							
Clean the engine cooling fins.							
Check for unusual engine noises.							
Check for unusual operating noises.							
Check the reel-to-bedknife adjustment.							
Check the height-of-cut adjustment.							
Touch up damaged paint.							
Clean the machine.							

Notation for Areas of Concern

Inspection performed by:		
Item	Date	Information

Pre-Maintenance Procedures

Preparing the Machine for Maintenance

WARNING

While you are maintaining or adjusting the machine, someone could start the engine. Accidentally starting the engine could seriously injure you or other bystanders.

Release the clutch bail, engage the parking brake, and pull the wire off the spark plug before you do any maintenance. Also push the wire aside so that it does not accidentally contact the spark plug.

1. Park the machine on a level surface.
2. Shut off the engine.
3. Engage the parking brake.
4. Wait for all moving parts to stop and allow the engine to cool before servicing, storing, or making repairs.
5. Disconnect the spark-plug wire (1).

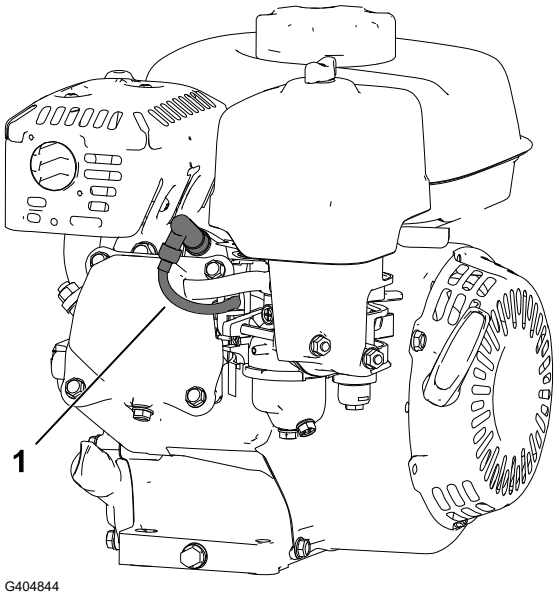

Engine Maintenance

Engine Safety

- Do not change the governor speed or overspeed the engine.
- Run the engine dry or remove the fuel with a hand pump; never siphon the fuel. If you must drain the fuel tank, do it outdoors.

Engine Oil Specifications

Crankcase capacity:	0.56 L (19 fl oz)
Oil type:	API classification SJ or later.
Oil viscosity:	Select the oil viscosity according to ambient temperature in the table below. **Note:** Multi-grade oils (5W-30 and 10W-30) increase oil consumption. Check the engine-oil level more frequently when you use these oils.

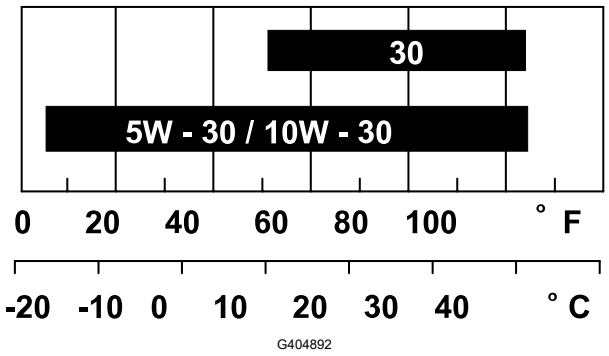

G404892

Checking the Engine-Oil Level

The ideal time to check the engine-oil level is when the engine is cool or before you have started the engine for the day. If you have already ran the engine, allow the oil to drain back down to the sump for at least 10 minutes before you check the engine-oil level.

1. Shut off the engine and wait for all moving parts to stop.
2. Position the machine so that the engine is level, and clean the area around the oil-fill tube ①.

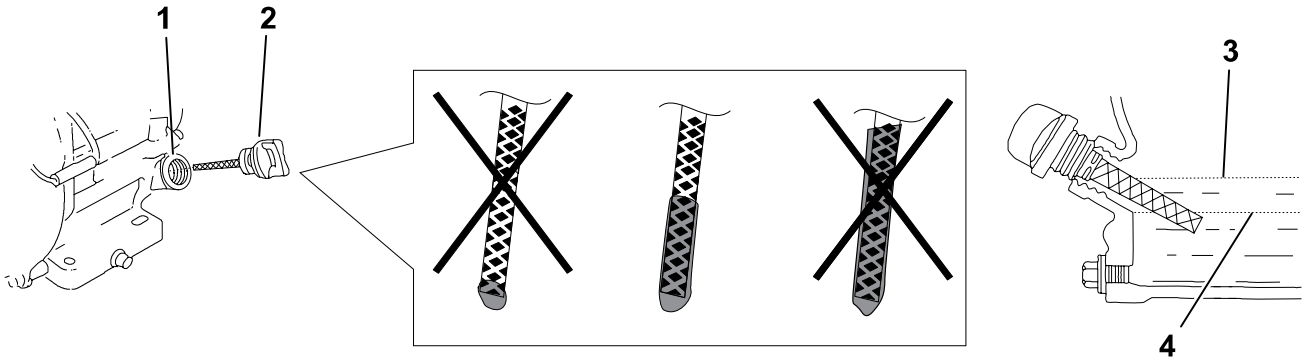

G404893

3. Remove the dipstick ② by rotating it counterclockwise.
4. Remove the dipstick and wipe the end clean.
5. Insert the dipstick fully into the oil-fill tube, **but do not thread it in**.
6. Remove the dipstick and check the engine-oil level.
7. If the engine-oil level is incorrect, add or drain oil to correct the level.

Checking the Engine-Oil Level (continued)

Note: If the oil level is near or below the lower level mark ④ on the dipstick, add only enough of the specified oil to raise the level to the upper limit mark ③ (bottom edge of the oil fill hole)

Changing the Engine Oil

⚠ WARNING ⚠

Oil may be hot after the engine has been run, and contact with hot oil can cause severe personal injury.

Avoid contacting the hot engine oil when you drain it.

1. Shut off the engine and wait for all moving parts to stop.
2. Place a pan under the drain plug ① to catch the oil.
3. Remove the drain plug, washer ①, and dipstick ②.
4. Position the engine so that the oil drains from the engine.
5. When the oil has drained completely, move the engine to a level position and install the drain plug and a new washer.

   Note: Dispose of the used oil at a certified recycling center.

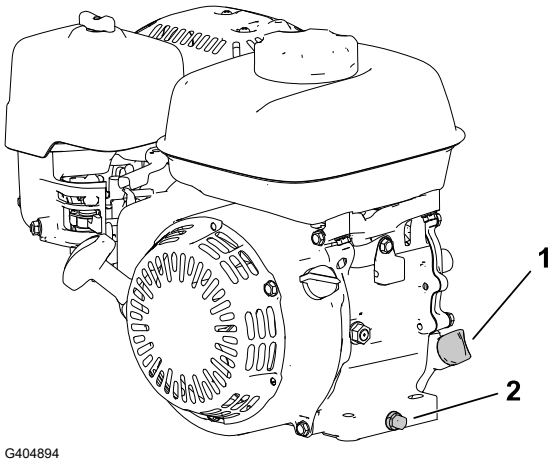

6. Slowly pour oil into the oil-fill hole until the oil is at the correct level.
7. Ensure that the oil is at the correct level on the dipstick.
8. Thread the dipstick into the oil-fill hole.
9. Wipe up any spilled oil.
10. Connect the wire to the spark plug.

Servicing the Air Cleaner

IMPORTANT

Do not operate the engine without the air filter assembly; extreme engine damage will occur.

Servicing the Air Cleaner (continued)

1. Shut off the engine and wait for all moving parts to stop.
2. Remove the wingnut (1) securing the air-cleaner cover (2).
3. Remove the air-cleaner cover.

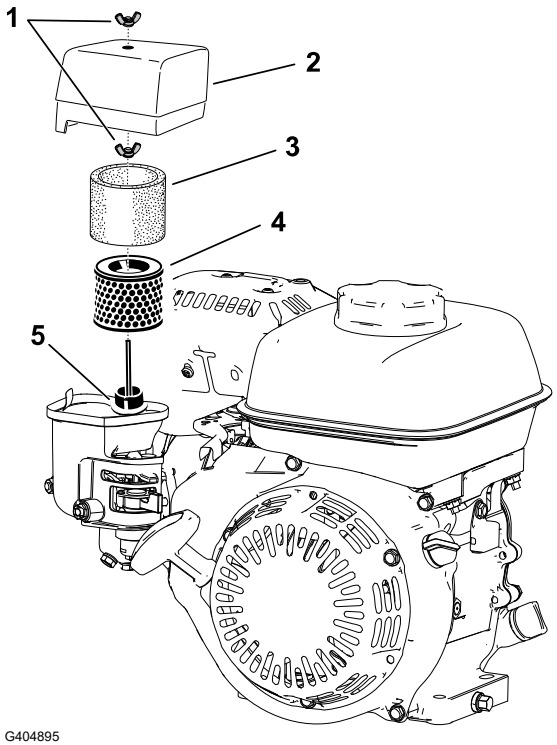

IMPORTANT

Ensure that no dirt or debris from the air-cleaner cover fall into the base.

4. Remove the foam element (3) and paper element (4) from the base.
5. Remove the foam element from the paper element.
6. Inspect the foam and paper elements; replace them if they are damaged or excessively dirty.
7. Clean the paper element by tapping it gently to remove the dirt.

IMPORTANT

Do not try to brush dirt off the paper element; brushing forces the dirt into the fibers. Replace the element if tapping it fails to remove the dirt.

8. Clean the foam element in warm, soapy water or in a nonflammable solvent.

Servicing the Air Cleaner (continued)

IMPORTANT

Do not use gasoline to clean the foam element because it could create a risk of fire or explosion.

9. Rinse and dry the foam element thoroughly.
10. Wipe dirt from the base and the cover with a moist rag.

IMPORTANT

Ensure that dirt and debris do not enter the air duct (5) leading to the carburetor.

11. Install the air-cleaner elements and ensure that they are properly positioned. Install the lower wing nut.
12. Install the cover and install the upper wing nut to secure it.

Servicing the Spark Plug

Use an NGK BPR6ES spark plug or equivalent.

1. Shut off the engine and wait for all moving parts to stop.
2. Clean around the spark plug.
3. Remove the spark plug from the cylinder head.

IMPORTANT

Replace a cracked, fouled, or dirty spark plug. Do not sand blast, scrape, or clean the electrodes because engine damage could result from grit entering the cylinder.

4. Set the gap on the plug (1) to 0.7 to 0.8 mm (0.028 to 0.031 inch).
5. Carefully install the spark plug by hand (to avoid cross threading) until it is hand tight.
6. Tighten the spark plug an additional 1/2 turn if it is new; otherwise, tighten it an additional 1/8 to 1/4 turn.

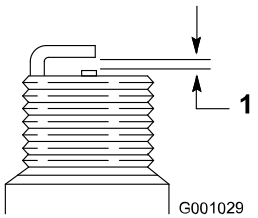

G404896

IMPORTANT

A loose spark plug can become very hot and can damage the engine; overtightening a spark plug may damage the threads in the cylinder head.

Servicing the Spark Plug (continued)

7. Connect the wire to the spark plug.

Controls Maintenance

Adjusting the Traction Cable

Adjust the traction cable to achieve a gap of 1.1 mm (0.045 inch) between the friction disc and the pressure plate.

1. Access the friction disc and pressure plate by removing the clutch cover [1].

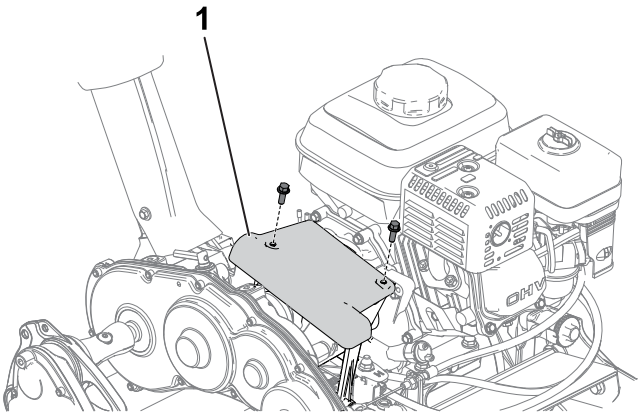

G404910

2. Loosen the jam nuts [2] and adjust the traction cable [1] so that a 1.1 mm (0.045 inch) gap [5] is between the friction disc [3] and the pressure plate [4].

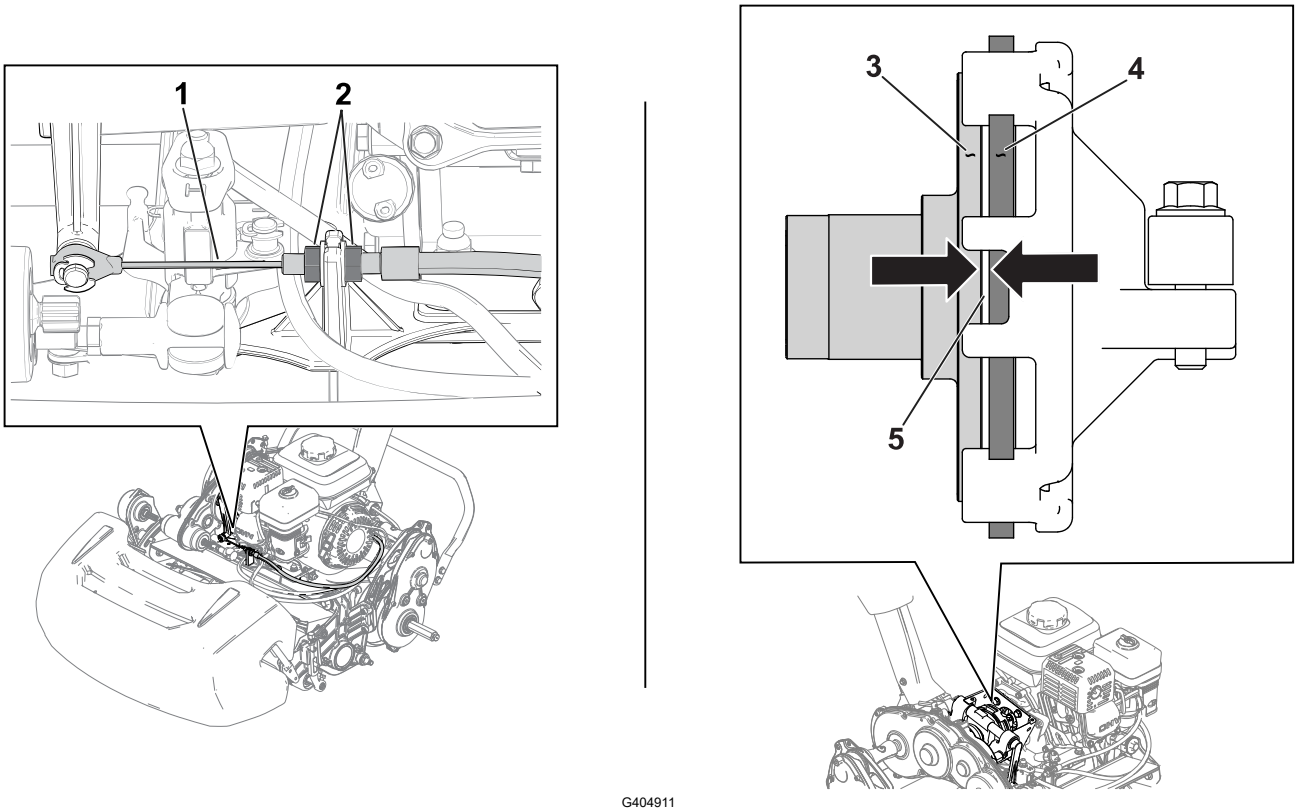

G404911

Adjusting the Service/Parking Brake

Adjust the service/parking brake if it slips during operation.

1. Disengage the parking brake.
2. Measure the free play at the end of the parking-brake handle ①.

   The handle free play should be between 12.7 to 25.4 mm (0.50 to 1 inch) ②. If the free play is not within this amount, proceed to the following step to adjust the brake cable ③.

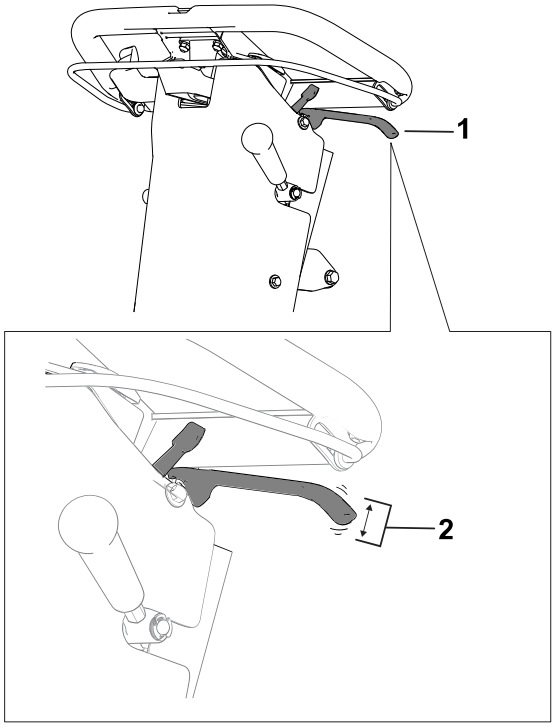

G404912

3. Perform the following steps to adjust the brake-cable tension:

   - To increase the cable tension, loosen the front-cable jam nut ① and tighten the rear jam nut ②. Repeat the previous step and adjust the tension if necessary.
   - To decrease the cable tension, loosen the rear jam nut ② and tighten the front-cable jam nut ①. Repeat the previous step and adjust the tension if necessary.

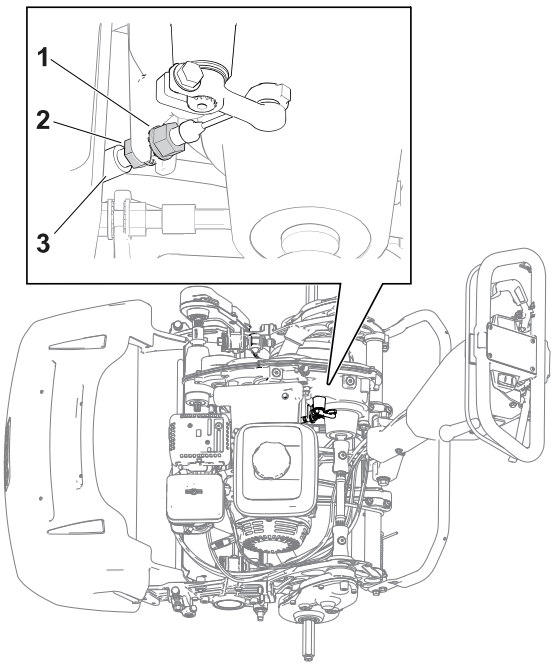

G404913

Adjusting the Reel-Control Cable

Adjust the reel-control cable ③ to remove additional slack.

Adjusting the Reel-Control Cable (continued)

1. Move the reel-speed-control knob to the high-reel-speed position.
2. Loosen the rear jam nut ① and tighten the front jam nut ②.

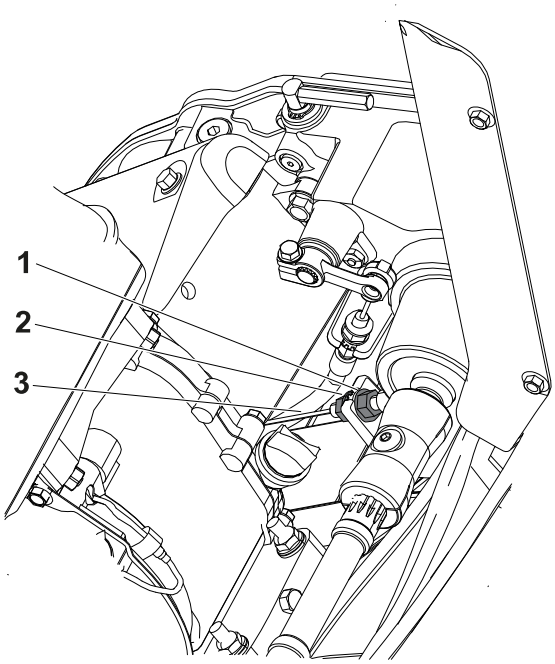

G404914

Adjusting the Throttle Cable

Adjusting the Low-Idle Engine Speed

1. Park the machine on a level surface and engage the parking brake.
2. Ensure that the engine is at a normal operating temperature.
3. Start the engine and use the throttle control to decrease the engine speed to low idle.
4. Use a tachometer to observe the low-idle engine speed.

   The ideal range for low idle is **1,800 to 2,000 rpm**.
5. Loosen the conduit clamp ② on the throttle cable ①.
6. Move the cable conduit until you observe 1,900 rpm on the tachometer.
7. Tighten the screw on the cable-conduit clamp.

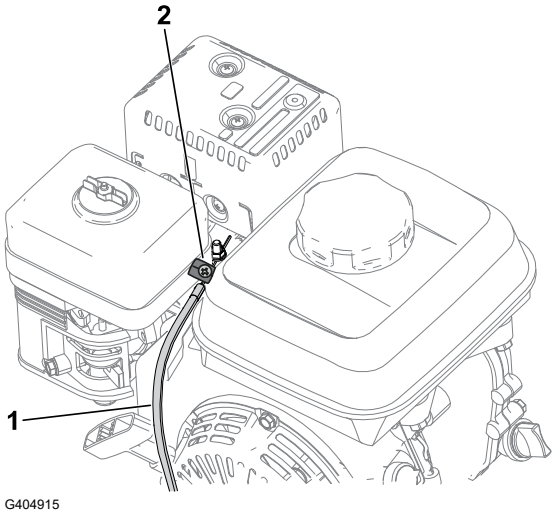

G404915

Adjusting the Throttle Cable (continued)

Adjusting the High-Idle Engine Speed

1. Park the machine on a level surface and engage the parking brake.

   Note: Ensure that the engine is at a normal operating temperature before you adjust the throttle cable.
2. Start the engine and use the throttle control to increase the engine speed to high idle.
3. Use a tachometer to observe the high-idle engine speed.

   The ideal range for high idle (for use in non-CE-compliant countries) is **3,350 to 3,550 rpm**. If the tachometer shows a speed below 3,350 or above 3,550 rpm, perform the following steps in this procedure until you attain a speed between 3,350 to 3,550 rpm.
4. Shut off the engine.
5. Adjust the throttle-control stop (1) per the high-idle reading on your tachometer.
   - To **increase** the high-idle-speed threshold, move the throttle-control stop **up**.
   - To **decrease** the high-idle-speed threshold, move the throttle-control stop **down**.
6. Start the engine and observe the new high-idle reading.

   If the tachometer shows the appropriate speed, the adjustment is completed.

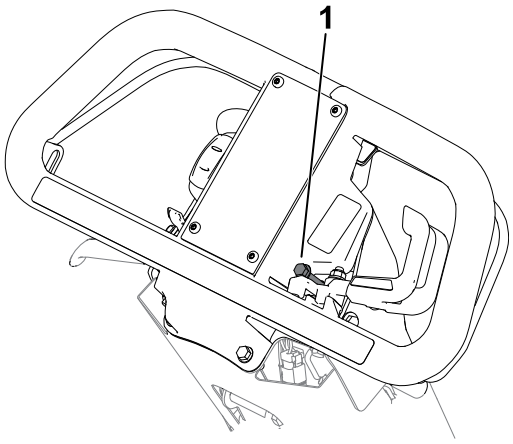

G440782

Cutting Unit Maintenance

Blade Safety

- Use care when checking the reel cutting-unit. Wear gloves and use caution when servicing the reel.
- A worn or damaged blade or bedknife can break, and a piece could be thrown toward you or bystanders, resulting in serious personal injury or death.
- Inspect the blades and bedknives periodically for excessive wear or damage.
- Use care when checking the blades. Wear gloves and use caution when servicing them. Only replace or backlap the blades and bedknives; never straighten or weld them.

Installing the Cutting Unit

Installing the Cutting Unit

Model 04820 Only

1. Move the kickstand to the CUTTING-UNIT-SERVICE position.
2. Remove the hardware that secures the reel-drive assembly to the side plate.
3. Remove the reel-drive assembly, flat washers, spring washers, and spacers from the side plate.
4. Align the cutting unit to the frame.

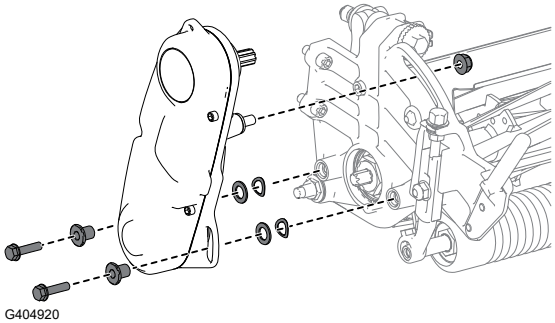

G404920

5. Use 4 socket-head screws (1) to secure the cutting unit to the frame.

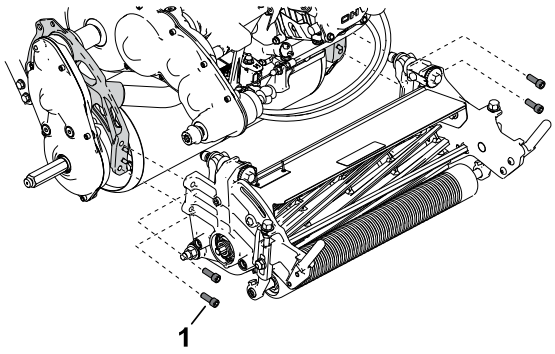

G404921

6. Use the previously removed socket-head screws, washers, and spacers to secure the reel-drive assembly to the cutting-unit side plate.

   Ensure that the reel-drive-assembly driveshaft is installed to the transmission-driveshaft coupler (1).

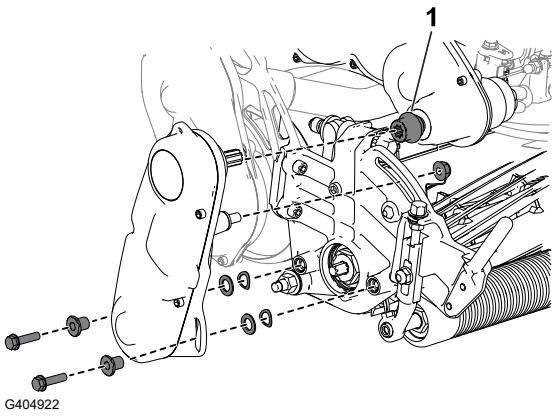

G404922

Installing the Cutting Unit

Models 04830 and 04840 Only

1. Move the kickstand to the Cutting-Unit-Service position.
2. Align the cutting unit to the frame.

Installing the Cutting Unit (continued)

3. Use 4 socket-head screws [1] to secure the cutting unit to the frame.
4. Slide the cutting-unit-drive coupler [2] onto the transmission driveshaft.

   The coupler should slide onto the transmission driveshaft without resistance. If there is resistance, ensure that the reel driveshaft and the transmission driveshaft are aligned
5. Install the grass basket.

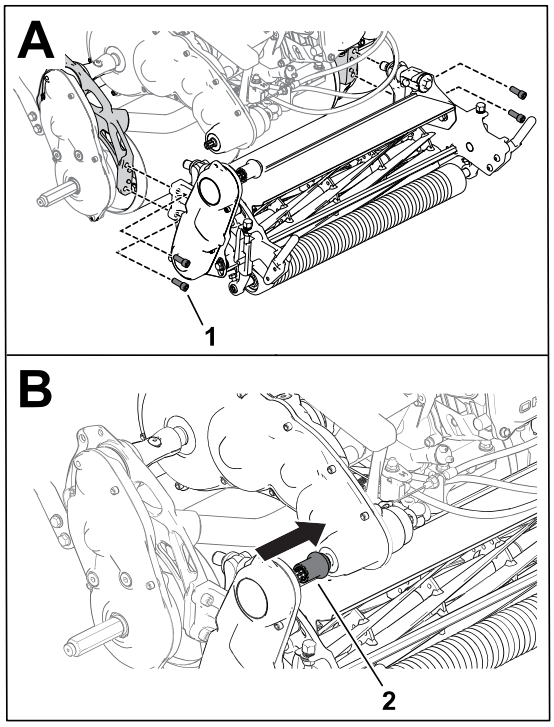

G404923

Adjusting the Reel-Driveshaft Position

Note: If you feel resistance between the coupler and the driveshaft when installing the cutting unit, perform this procedure to adjust the driveshaft.

1. Loosen the bolt [2].
2. Rotate the reel-drive assembly [1] so that the reel driveshaft is properly aligned with the transmission driveshaft.
3. Tighten the bolt that you previously loosened.

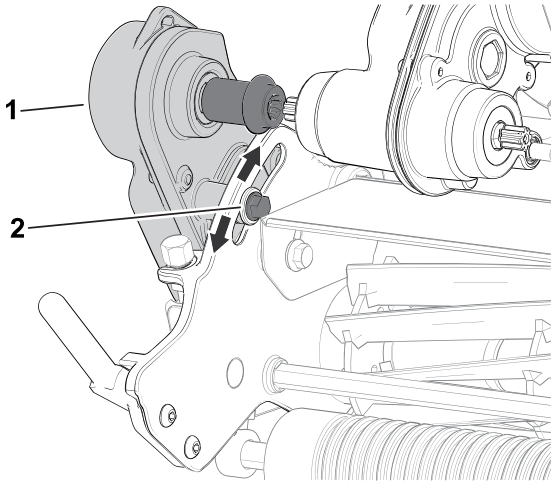

G404925

If resistance continues, adjust the engine and transmission alignment; refer to the adjustment procedure in the traction unit *Service Manual*.

Removing the Cutting Unit

Removing the Cutting Unit

Model 04820 Only

1. Move the kickstand to the CUTTING-UNIT-SERVICE position.
2. Remove the grass basket (if equipped).
3. Remove the reel-drive assembly from the cutting unit and retain the hardware.

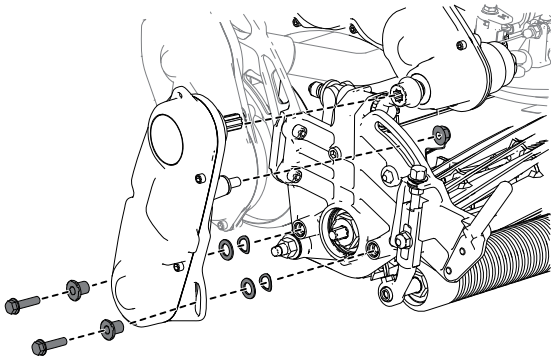

G404926

4. Remove the socket-head screws (1) that secure the cutting unit to the frame.
5. Remove the cutting unit from the frame.

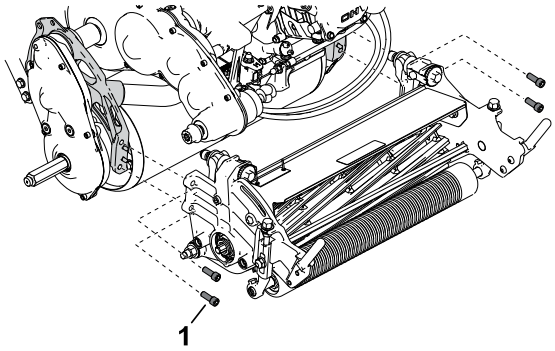

G404927

Removing the Cutting Unit

Models 04830 and 04840 Only

1. Move the kickstand to the CUTTING-UNIT-SERVICE position.
2. Remove the grass basket (if equipped).

Removing the Cutting Unit (continued)

3. Release the cutting-unit-drive coupler (1) from the transmission driveshaft.
4. Remove the socket-head screws (2) that secure the cutting unit to the frame.
5. Remove the cutting unit from the frame.

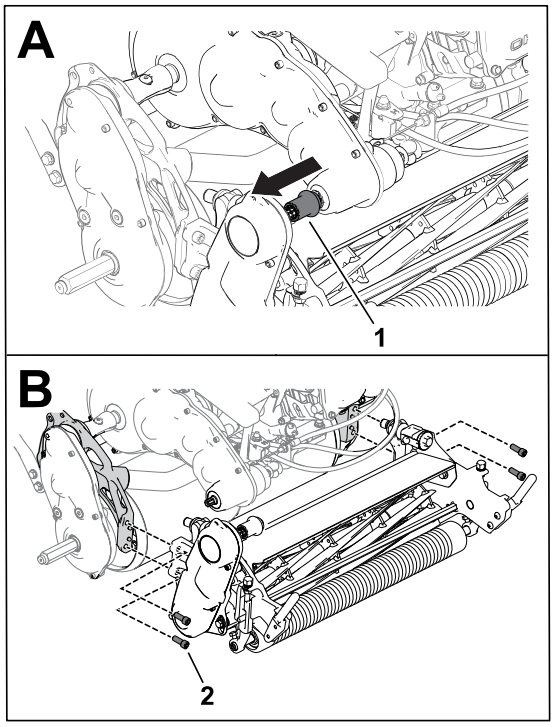

G404928

Backlapping Information

Kit Name/Model	Compatible Traction Units
Access Backlap Kit (Model 139-4342)	Models 04820, 04830, and 04840
Backlap Kit (Model 04800)	Models 04830 and 04840

Refer to the operating instructions in the specific kit *Installation Instructions*. Contact your authorized Toro distributor to acquire one of these kits.

Storage Safety

- Shut off the engine, remove the key (if equipped), and wait for all movement to stop before you leave the operator's position. Allow the machine to cool before adjusting, servicing, cleaning, or storing it.
- Do not store the machine or fuel container where there is an open flame, spark, or pilot light, such as on a water heater or other appliance.

Storing the Machine

1. Remove any grass clippings, dirt, and grime from the external parts of the entire machine, especially the engine. Clean the dirt and chaff from the outside of the engine cylinder-head fins and the blower housing.

IMPORTANT

You can wash the machine with mild detergent and water. Do not pressure-wash the machine. Avoid excessive use of water, especially near the shift-lever plate and the engine.

2. For long-term storage (more than 30 days) add stabilizer/conditioner additive to the fuel in the tank.
   A. Run the engine to distribute conditioned fuel through the fuel system for 5 minutes.
   B. Either shut off the engine, allow it to cool, and drain the fuel tank, or operate the engine until it shuts off.
   C. Start the engine and run it until it shuts off. Start the engine again, with the choke closed, until the engine does not start.
   D. Disconnect the spark-plug wire from the spark plug.
   E. Dispose of the fuel properly. Recycle it according to local codes.

   Note: Do not store fuel containing stabilizer/conditioner longer than the duration recommended by the fuel-stabilizer manufacturer.
3. Check and tighten all bolts, nuts, and screws. Repair or replace any part that is worn or damaged.
4. Paint all scratched or bare metal surfaces. Paint is available from your authorized Toro distributor.
5. Store the machine in a clean, dry garage or storage area. Cover the machine to protect it and keep it clean.


TORO