Parts:

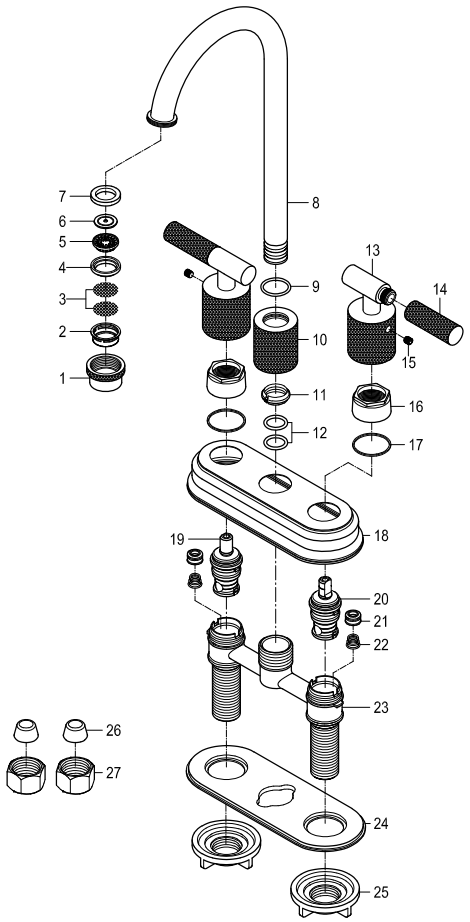

Replacement Parts:

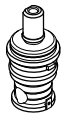

Hot Cartridge: KBRP181HC



Cold Cartridge: KBRP181CC

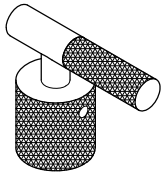

Handle: FSCH8961KNL

CARE AND MAINTENANCE OF YOUR FAUCET

Your Kingston Brass faucet has been finished to the most strict standards; however, due to the high content of minerals in the water, your finish may appear dull and tarnished after time. These are some do's and don'ts to maintain the luster on your faucet for many years to come.

DO
1. Use a silicon based caulking when installing.
2. Clean your faucet with only a mild soap and water solution.
3. Dry your faucet after using it.
4. Give it a coat of Carnauba Wax periodically.

DON'T
1. Use plumbers putty when installing the faucet.
2. Use any abrasive cleaning agents.

It may seem like a very simple and short list but it is that simple to maintain your faucet, looking shiny and new.

If your faucet is already looking somewhat dull and tarnished, before replacing it, try cleaning it with a 50/50 solution of vinegar and water, you may need to soak some rags and wrap around those stubborn areas, leave overnight and rinse completely in the morning, apply Carnauba wax once you have removed the mineral deposits.

KINGSTON
KITCHEN & BATH

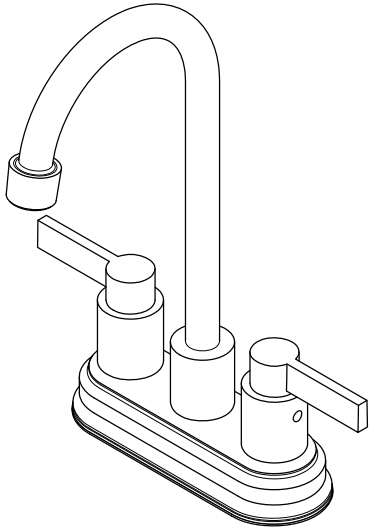

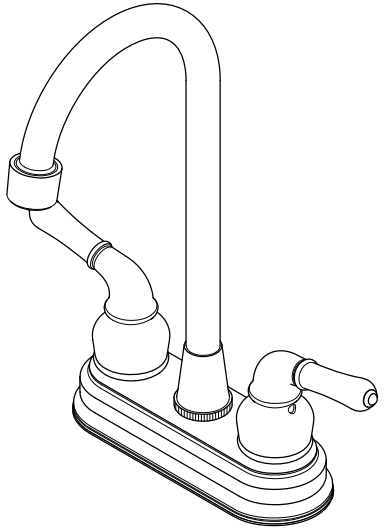

Parts:

Lock Nut	Cone Washer & Coupling Nut
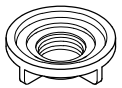	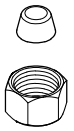
2 Pcs	2 Pcs

NOTICE

Failure to follow all directions may cause leaks which may result in water damage

www.kingstonbrass.com
TOLL-FREE CUSTOMER SERVICE: 1-877-2-KBRASS
TECHNICAL SUPPORT E-mail: service@kingstonbrass.com
12775 Reservoir Street, Chino, CA 91710

KINGSTON
KITCHEN & BATH

INSTALLATION INSTRUCTIONS
Twin Handles Bar Faucet

Need Tools:



Basin Wrench | Adjustable Wrench | Teflon Tape | Silicone Sealant | Screwdriver

BEFORE BEGINNING INSTALLATION:

1. Flush plumbing lines to clear any debris.
2. Shut off both supply lines after flushing.

1

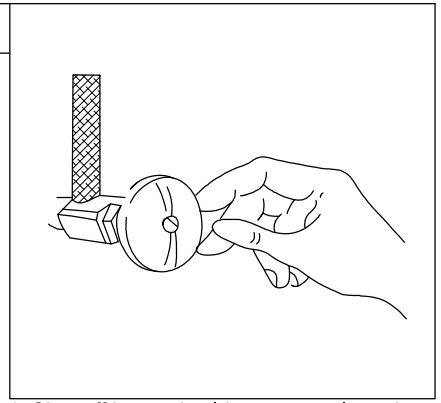

1. Shut off hot and cold water supply under sink. Plug sink drain with cloth to avoid losing small parts. Remove old faucet.

2

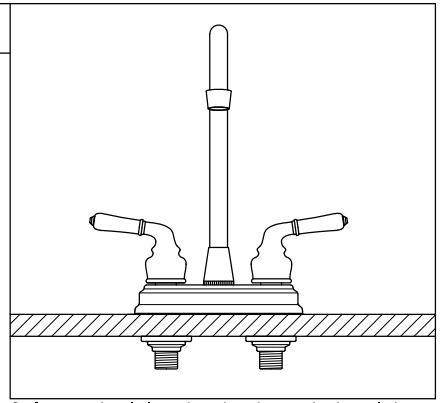

2. Insert the inlet shanks through the sink holes, and press down. Assemble the washers and lock nuts on the inlet shanks, and then tighten the nuts by hand.

3

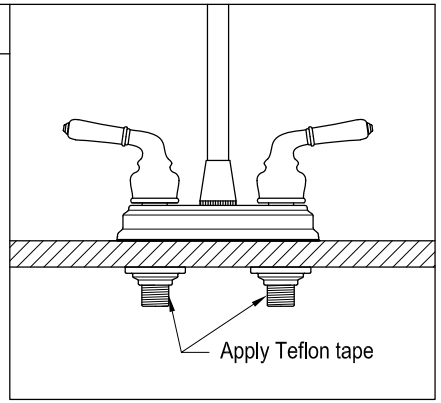

3. Apply Teflon tape to inlet shanks and connect supply lines.

4

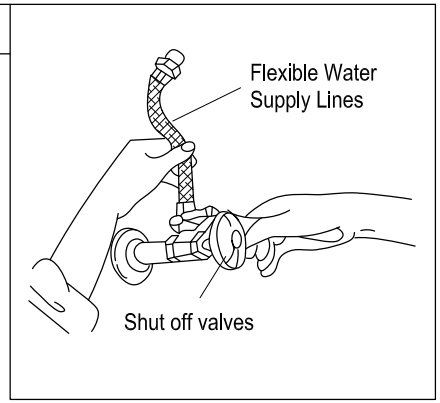

4. Apply Teflon tape to threads on faucet shank and shut off valves, connect water supply line.

5

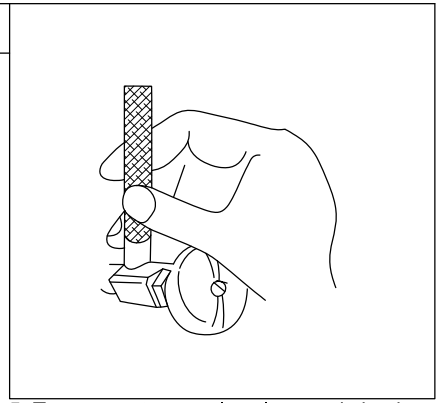

5. Turn on water supply valves and check for leaks, especially all supply line connections.

6

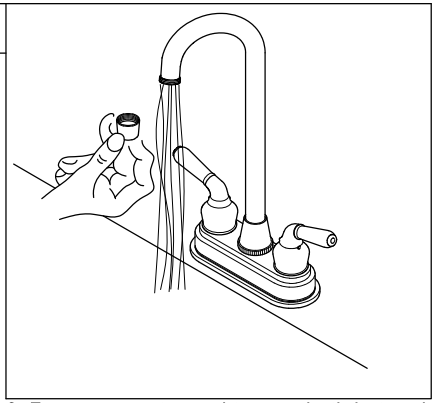

6. Remove aerator and turn on both hot and cold valves, let water run for at least one minute, this will clear any debris left in the line, reinstall aerator.

Warning!!!

- Do not over-tighten nut during installation.
- Over-tighten may crack the valve and cause severe leak.

© 2023-02-E Kingston Brass