Form No. 3473-847 Rev A

Chute Gate Kit

Z Master® 2000 and 4000 Series Riding Mowers

Model No. 144-2688
Model No. 144-6571
Model No. 144-6572
Model No. 163-4118
Model No. 163-4119
Model No. 163-4120

Installation Instructions

Note: If an adjustable baffle is installed, replace with the baffle in the OCDC kit.

Safety

Safety and Instructional Decals

Safety decals and instructions are easily visible to the operator and are located near any area of potential danger. Replace any decal that is damaged or missing.

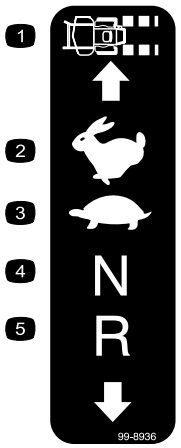

decal99-8936

99-8936

1. Machine speed
2. Fast
3. Slow
4. Neutral
5. Reverse

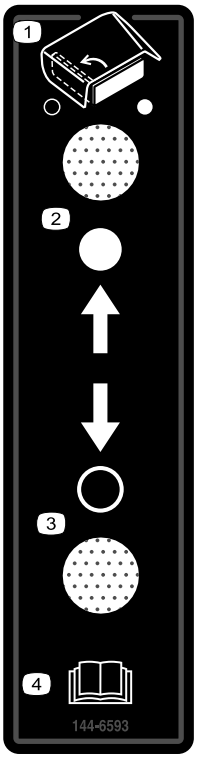

decal144-6593

144-6593

1. Chute gate
2. Close the chute gate.
3. Open the chute gate.
4. Read the *Operator's Manual*.

© 2025—The Toro® Company
8111 Lyndale Avenue South
Bloomington, MN 55420

Register at www.Toro.com.

Original Instructions (EN)
Printed in the USA
All Rights Reserved

3473-847

Installation

Loose Parts

Use the chart below to verify that all parts have been shipped.

Procedure	Description	Qty.	Use
1	No parts required	–	Prepare the machine.
2	No parts required	–	Remove the existing side discharge chute.
3	Discharge baffle Bagger baffle Carriage bolt (3/8 x 7/8 inch) Locknut (3/8 inch) Carriage bolt (5/16 x 7/8 inch) Locknut (5/16 inch)	1 1 4 4 1 1	Prepare the mower deck.
4	Side discharge chute with gate Hex-head bolt (5/16 x 7-1/2 inches) Locknut (5/16 inch) Spacer Spring	1 1 1 1 1	Install the side discharge chute with the gate.
5	Control box assembly Carriage bolt (3/8 x 7/8 inch) Locknut (3/8 inch) Cable tie Adhesive cable tie	1 2 2 3 1	Install the control box.

Note: Determine the left and right sides of the machine from the normal operating position.

1

Preparing the Machine

No Parts Required

Procedure

1. Park the machine on a level surface.
2. Disengage the blade-control switch.
3. Move the motion-control levers outward to the NEUTRAL-LOCK position.
4. Engage the parking brake.
5. Shut off the engine and remove the key.

2

Removing the Existing Side Discharge Chute

No Parts Required

Procedure

Remove the bolt, spring, spacer, and locknut securing the discharge chute and remove the discharge chute (Figure 1).

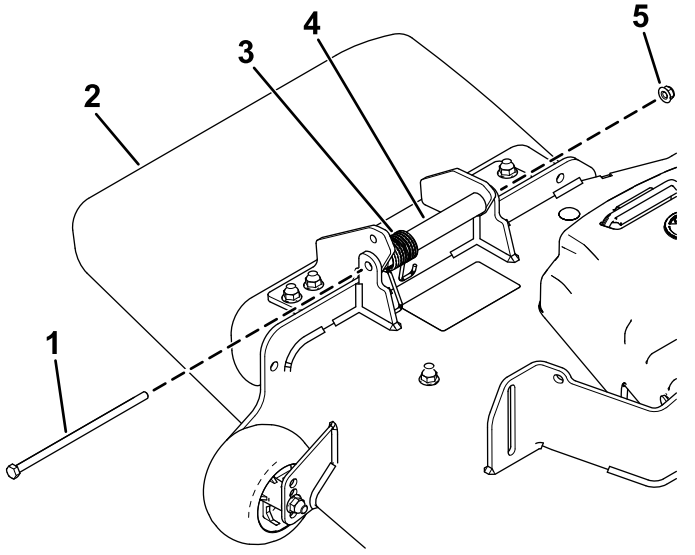

Figure 1

1. Bolt
2. Discharge chute
3. Spring
4. Spacer
5. Locknut

3

Preparing the Mower Deck

Parts needed for this procedure:

1	Discharge baffle
1	Bagger baffle
4	Carriage bolt (3/8 x 7/8 inch)
4	Locknut (3/8 inch)
1	Carriage bolt (5/16 x 7/8 inch)
1	Locknut (5/16 inch)

Procedure

1. Remove the existing discharge baffle, 2 carriage bolts, and 2 locknuts (Figure 2).

   Discard the fasteners.

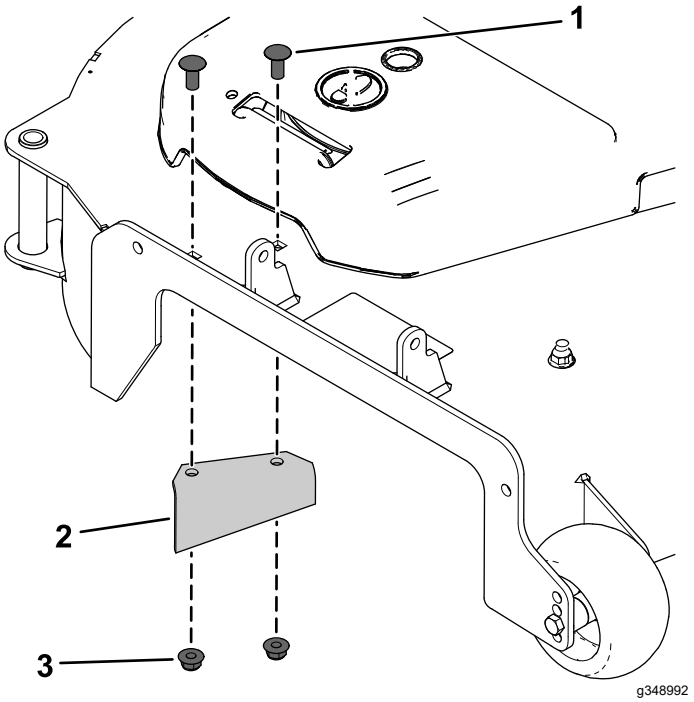

Figure 2

1. Carriage bolt
2. Existing discharge baffle
3. Locknut

2. Remove the 2 carriage bolts and 2 locknuts at the front of the mower deck (Figure 3).

   Discard the fasteners.

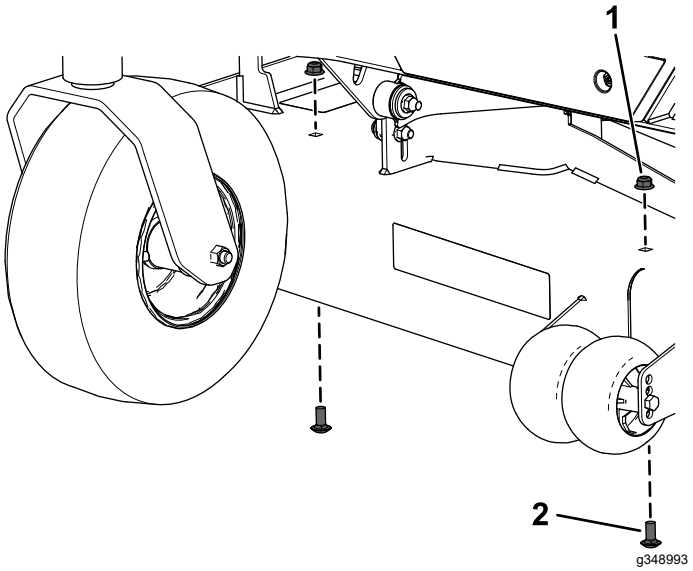

Figure 3

1. Locknut
2. Carriage bolt

3. Install the bagger baffle to the mower deck and deck bumper using 2 carriage bolts (3/8 x 7/8 inch), 2 locknuts (3/8 inch), 1 carriage bolt (5/16 x 7/8 inch), and 1 locknut (5/16 inch) as shown in Figure 4 and Figure 5.

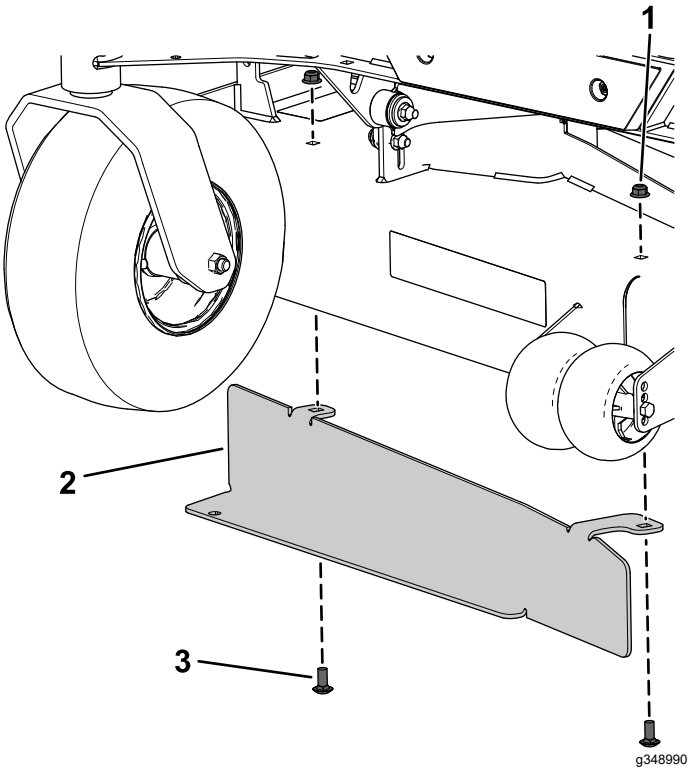

Figure 4

60-inch deck shown

1. Locknut (3/8 inch)
2. Bagger baffle
3. Carriage bolt (3/8 x 7/8 inch)

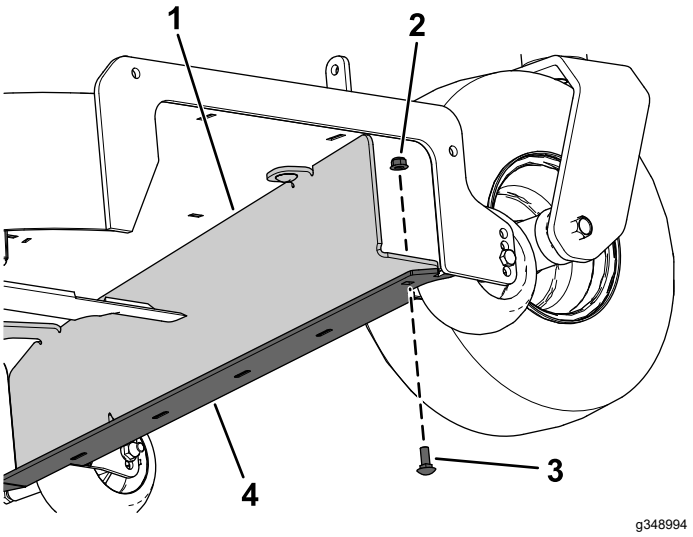

Figure 5

1. Bagger baffle
2. Locknut (5/16 inch)
3. Carriage bolt (5/16 x 7/8 inch)
4. Deck bumper

4. Install the new discharge baffle using 2 carriage bolts (3/8 x 7/8 inch) and 2 locknuts (3/8 inch) as shown in Figure 6.

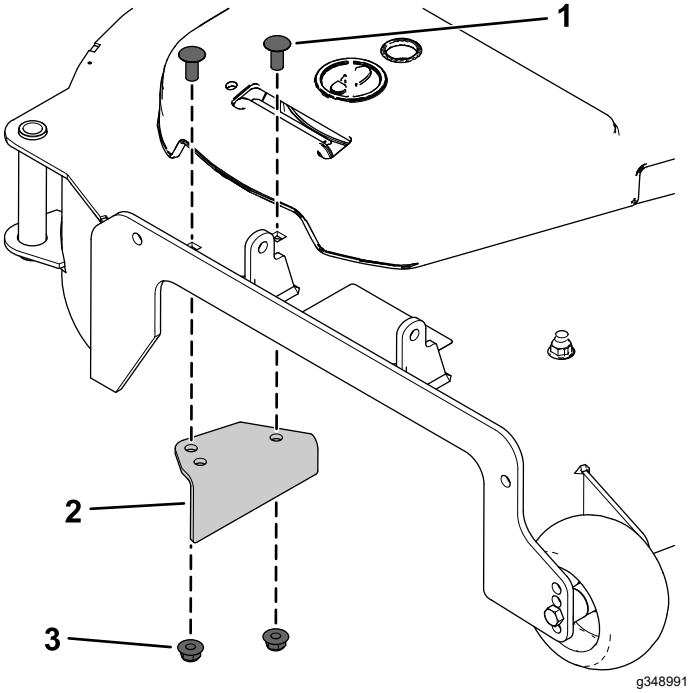

Figure 6

1. Carriage bolt (3/8 x 7/8 inch)
2. New discharge baffle
3. Locknut (3/8 inch)

4

Installing the Side Discharge Chute with the Gate

Parts needed for this procedure:

1	Side discharge chute with gate
1	Hex-head bolt (5/16 x 7-1/2 inches)
1	Locknut (5/16 inch)
1	Spacer
1	Spring

Procedure

⚠ WARNING

An uncovered discharge opening could allow the machine to throw objects toward you or bystanders, resulting in serious injury. Also, contact with the blade could occur.

Never operate the machine unless you install a mulch plate, discharge deflector, or grass collection system.

1. Place the new spacer and spring onto the discharge chute (Figure 7).

   Place 1 end of the spring behind the deck edge.

   Note: Ensure that the end of the spring is installed behind the deck edge before installing the hex-head bolt (5/16 x 7-1/2 inches).

2. Install hex-head bolt (5/16 x 7-1/2 inches) and locknut (5/16 inch) as shown in Figure 7.

   Place the end of the spring around the discharge chute.

3. Tighten the locknut (5/16 inch) until the end of the hex-head bolt (5/16 x 7-1/2 inches) is flush with the end of the locknut (5/16 inch).

   Do not over tighten the locknut.

   Important: **The discharge chute must be able to lower down into position. Lift the chute up to test that it lowers into the fully-down position.**

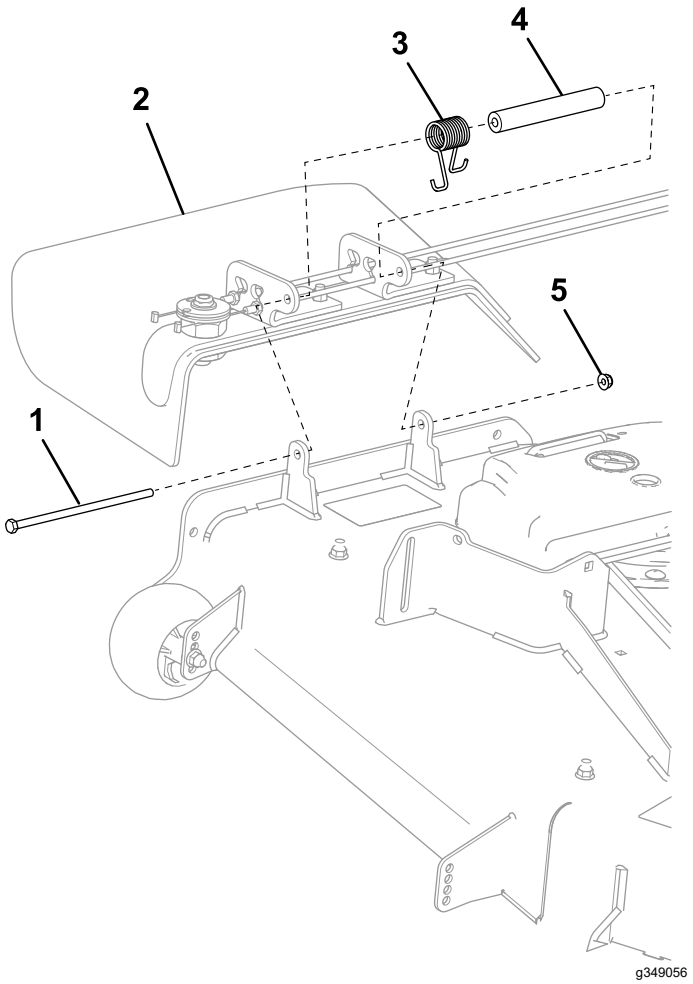

Figure 7

1. Hex-head bolt (5/16 x 7-1/2 inches)
2. Discharge chute
3. Spring
4. Spacer
5. Locknut (5/16 inch)

5

Installing the Control Box

Parts needed for this procedure:

1	Control box assembly
2	Carriage bolt (3/8 x 7/8 inch)
2	Locknut (3/8 inch)
3	Cable tie
1	Adhesive cable tie

Installing the Control Box on Z Master® 2000 Series Mowers

1. Select the correct control box for the machine.

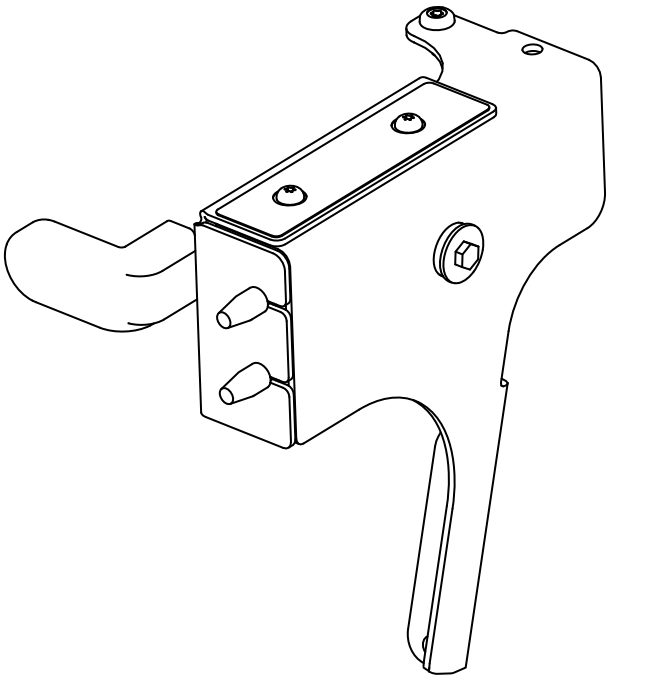

g543783

Figure 8

2. Route the cables between the control box and discharge chute as shown in Figure 9 to avoid damaging the cables through the entire height-of-cut range.

   Important: **Ensure that you route the cables away from the front of the deck-lift pedal as shown in Figure 9 so that you do not damage the cables.**

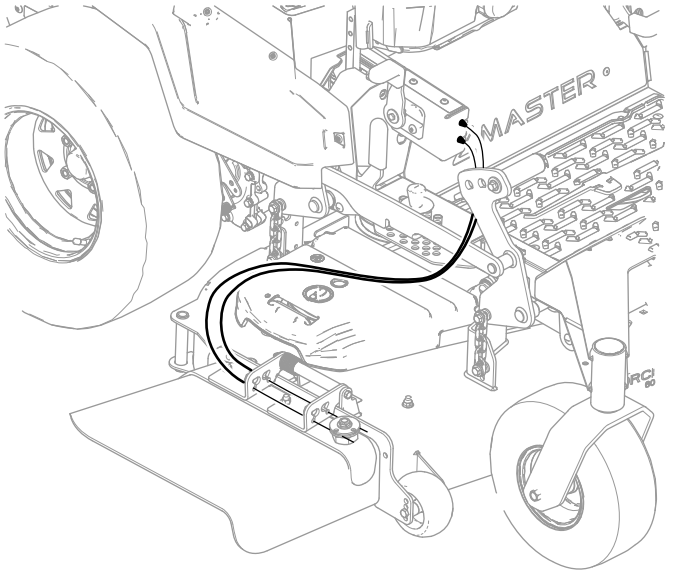

g349011

Figure 9

3. Remove the self-threading screw from the right motion-control cover (Figure 10).

   Retain the self-threading screw.

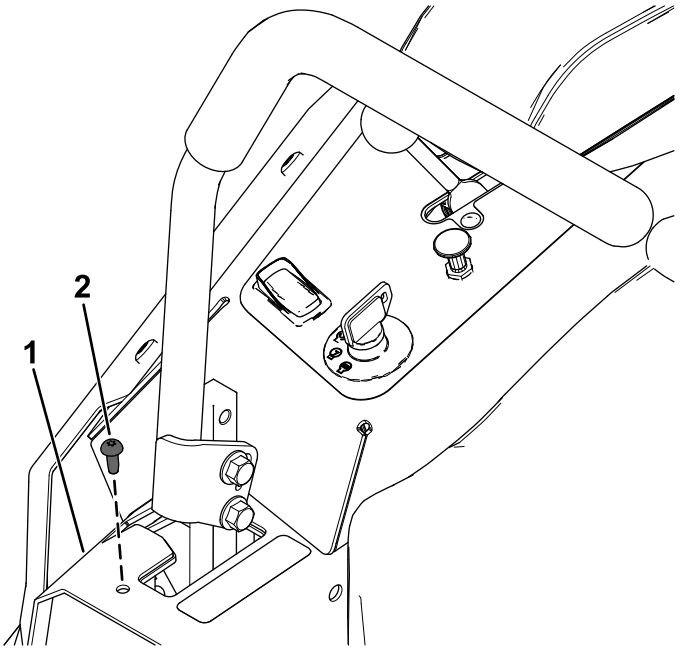

g349074

Figure 10

1. Right motion-control cover 2. Self-threading screw

4. Install the chute control box.

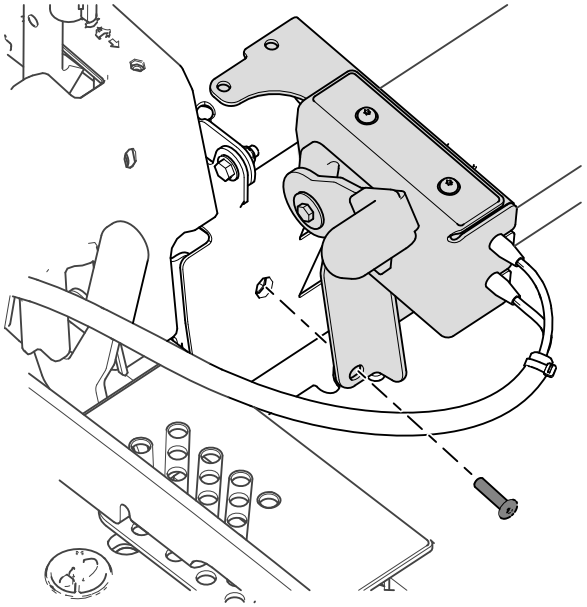

g543782

Figure 11

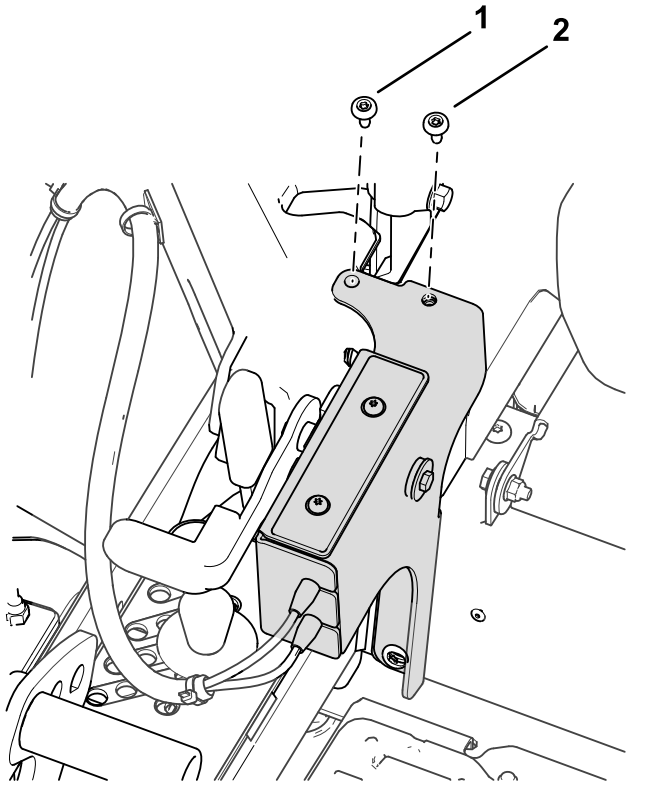

g543781

Figure 12

1. Kit screw
2. Existing self-threading screw

5. Install the adhesive back plastic mount on a smooth, clean surface.

   Thread the cable tie through the plastic mount and secure the cables with the cable tie.

6. Slowly move the mower deck through the height-of-cut range to ensure that the cables do not stretch or kink when you are operating the machine.

Installing the Control Box on Z Master® 4000 Series Mowers

1. Select the correct control box for the machine.

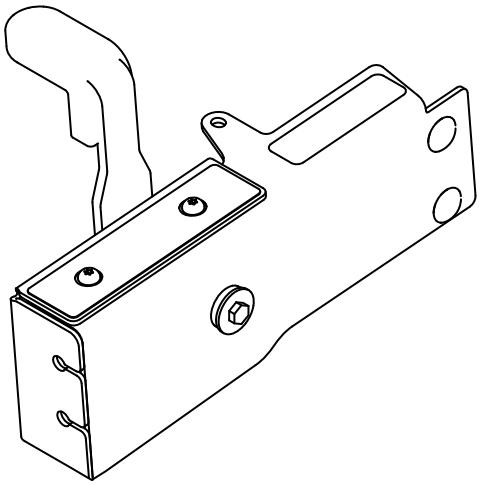

g543784

Figure 13

2. Route the cables between the control box and discharge chute to avoid damaging the cables through the entire height-of-cut range.

   Important: **Ensure that you route the cables away from the front of the deck-lift pedal so that you do not damage the cables.**

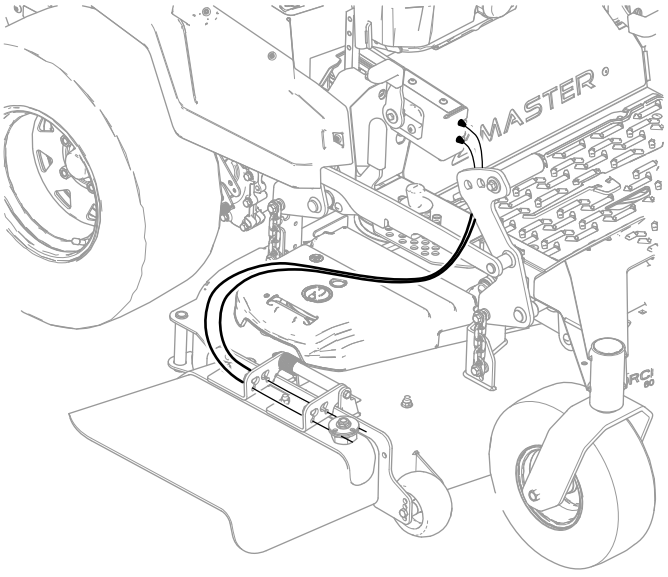

g349011

Figure 14

3. Remove the self-threading screw from the right motion-control cover.

   Retain the self-threading screw.

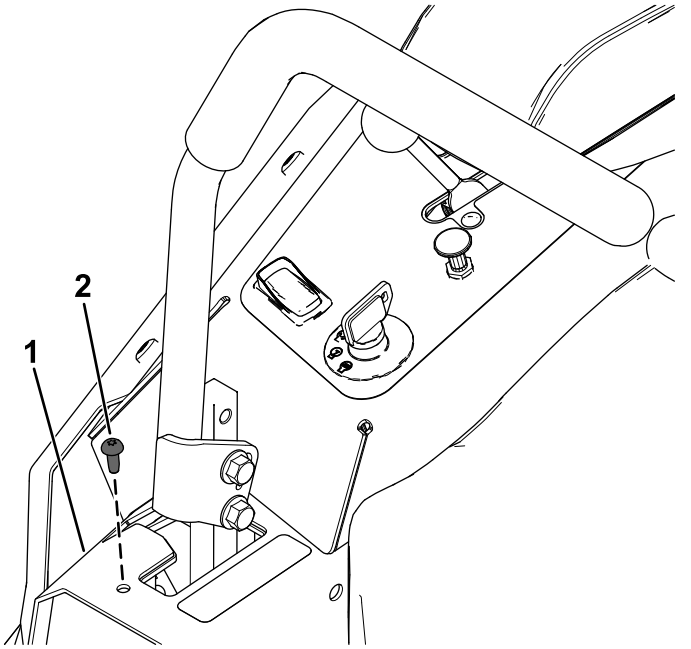

Figure 15

1. Right motion-control cover
2. Self-threading screw

4. Remove the 4 shoulder screws securing the right side pod (Figure 16).

   Retain the 4 shoulder screws and right side pod for later installation.

5. Remove the right side pod (Figure 16).

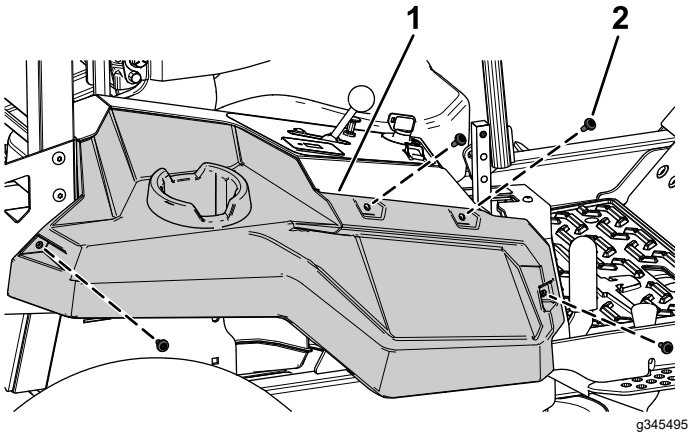

Figure 16

1. Right side pod
2. Shoulder screw

6. Secure the control box to the right motion-control cover using 2 carriage bolts (3/8 x 7/8 inch) and 2 locknuts (3/8 inch) as shown in Figure 17.

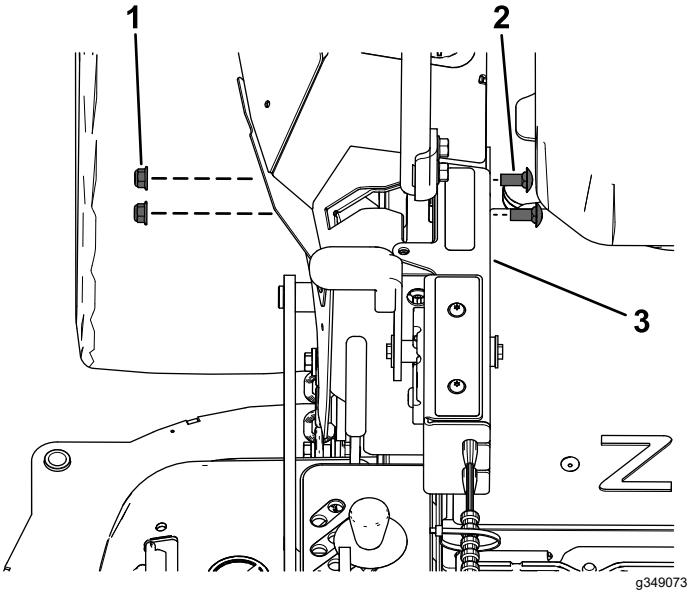

Figure 17

1. Locknut (3/8 inch)
2. Carriage bolt (3/8 x 7/8 inch)
3. Control box

7. Install the previously removed self-threading screw to the right motion-control cover.
8. Secure the right side pod using the previously removed 4 shoulder screws.
9. Install the adhesive back plastic mount on a smooth, clean surface.

   Thread the cable tie through the plastic mount and secure the cables with the cable tie.
10. Slowly move the mower deck through the height-of-cut range to ensure that the cables do not stretch or kink when you are operating the machine.

Notes:

Notes:



Count on it.