Installation Instructions for *R9S80 & *D9S80* Gas Furnace CATEGORY I

These furnaces comply with requirements embodied in the American National Standard / National Standard of Canada ANSI Z21.47·CSA-2.3 Gas Fired Central Furnaces.

Installer:
Affix all manuals adjacent to the unit.

RECOGNIZE THIS SYMBOL AS A SAFETY PRECAUTION.

As a professional installer you have an obligation to know the product better than the customer. This includes all safety precautions and related items.

Prior to actual installation, thoroughly familiarize yourself with this Instruction Manual. Pay special attention to all safety warnings. Often during installation or repair it is possible to place yourself in a position which is more hazardous than when the unit is in operation.

Remember, it is your responsibility to install the product safely and to know it well enough to be able to instruct a customer in its safe use.

Safety is a matter of common sense...a matter of thinking before acting. Most dealers have a list of specific good safety practices...follow them.

The precautions listed in this Installation Manual are intended as supplemental to existing practices. However, if there is a direct conflict between existing practices and the content of this manual, the precautions listed herein take precedence.

***NOTE:** Please contact your distributor or our website for the applicable Specification Sheet referred to in this manual.

WARNING

ONLY PERSONNEL THAT HAVE BEEN TRAINED TO INSTALL, ADJUST, SERVICE, MAINTENANCE OR REPAIR (HEREINAFTER, "SERVICE") THE EQUIPMENT SPECIFIED IN THIS MANUAL SHOULD SERVICE THE EQUIPMENT.

THIS EQUIPMENT IS NOT INTENDED FOR USE BY PERSONS (INCLUDING CHILDREN) WITH REDUCED PHYSICAL, SENSORY OR MENTAL CAPABILITIES, OR LACK OF EXPERIENCE AND KNOWLEDGE, UNLESS THEY HAVE BEEN GIVEN SUPERVISION OR INSTRUCTION CONCERNING USE OF THE APPLIANCE BY A PERSON RESPONSIBLE FOR THEIR SAFETY.

CHILDREN SHOULD BE SUPERVISED TO ENSURE THAT THEY DO NOT PLAY WITH THE EQUIPMENT.

THE MANUFACTURER WILL NOT BE RESPONSIBLE FOR ANY INJURY OR PROPERTY DAMAGE ARISING FROM IMPROPER SUPERVISION, SERVICE OR SERVICE PROCEDURES. IF YOU SERVICE THIS UNIT, YOU ASSUME RESPONSIBILITY FOR ANY INJURY OR PROPERTY DAMAGE WHICH MAY RESULT. IN ADDITION, IN JURISDICTIONS THAT REQUIRE ONE OR MORE LICENSES TO SERVICE THE EQUIPMENT SPECIFIED IN THIS MANUAL, ONLY LICENSED PERSONNEL SHOULD SERVICE THE EQUIPMENT. IMPROPER SUPERVISION, INSTALLATION, ADJUSTMENT, SERVICING, MAINTENANCE OR REPAIR OF THE EQUIPMENT SPECIFIED IN THIS MANUAL, OR ATTEMPTING TO INSTALL, ADJUST, SERVICE OR REPAIR THE EQUIPMENT SPECIFIED IN THIS MANUAL WITHOUT PROPER SUPERVISION OR TRAINING MAY RESULT IN PRODUCT DAMAGE, PROPERTY DAMAGE, PERSONAL INJURY OR DEATH.

WARNING

Do not bypass safety devices.

80% HEX

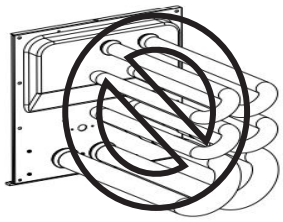

DO NOT LIFT PRODUCT USING HEAT EXCHANGER

19001 Kermier Rd. Waller, TX 77484
www.goodmanmfg.com • www.amana-hac.com
© 2025 Daikin Comfort Technologies Manufacturing, Inc.

IOG-2035C
07/2025

Amana is a registered trademark of Maytag Corporation or its related companies and is used under license.
All rights reserved.

TABLE OF CONTENTS

Safety Considerations 2
Product Application 4
Location Requirements & Considerations 5
Combustion & Ventilation Air Requirements 8
Electrical Connections 10
Gas Supply and Piping 11
Circulating Air 15
Electrical 17
R-32 Information 23
Maintenance 23
Media Air Filter or Electronic Air Cleaner Removal 24
Before Leaving an Installation 24
Repair and Replacement Parts 24
Airflow Tables 25
Status Codes 30
Troubleshooting Codes 32
Wiring Diagram 34
Start-Up Checklist 36

SAFETY CONSIDERATIONS

Adhere to the following warnings and cautions when installing,adjusting, altering, servicing, or operating the furnace. To ensure proper installation and operation, thoroughly read this manual for specifics pertaining to the installation and application of this product.

WARNING

FIRE OR EXPLOSION HAZARD

Failure to follow the safety warnings exactly could result in serious injury, death or property damage.

Never test for gas leaks with an open flame. Use a commercially available soap solution made specifically for the detection of leaks to check all connections. A fire or explosion may result causing property damage, personal injury or loss of life.

This furnace is manufactured for use with natural gas. It may be field converted to operate on L.P. gas by using the appropriate L.P. conversion kit listed in the **PROPANE GAS/HIGH ALTITUDE INSTALLATIONS section** of this manual.

Install this furnace only in a location and position as specified in **LOCATION REQUIREMENTS & CONSIDERATIONS section and INSTALLATION POSITIONS section** of this manual.

Provide adequate combustion and ventilation air to the furnace as specified in **COMBUSTION & VENTILATION AIR REQUIREMENTS section of this manual.**

Combustion products must be discharged to the outdoors. Connect this furnace to an approved vent system only, as specified in **Category 1 Venting** section of this manual.

Never test for gas leaks with an open flame. Use a commercially available soap solution made specifically for the detection of leaks to check all connections, as specified in **GAS SUPPLY AND PIPING** section of this manual. Always install a furnace to operate within the furnace's intended temperature-rise range with a duct system which has external static pressure within the allowable range, as specified on the furnace rating plate and **OPERATIONAL CHECKS section** of these instructions.

When furnace duct(s) supply air outside the space containing the furnace, a return air duct must terminate in the same space as the supply duct and be sealed to the furnace casing.

A gas-fired furnace for installation in a residential garage must be installed as specified in the **LOCATION REQUIREMENTS AND CONSIDERATIONS section** of this manual.

This furnace may be used as a construction site heater only if certain conditions are met. These conditions are listed in the **PRODUCT APPLICATION section** of this manual.

WARNING

To prevent personal injury or death due to improper installation, adjustment, alteration, service, or maintenance, refer to this manual. For additional assistance or information, consult a qualified installer, servicer agency or the gas supplier.

WARNING

THIS FURNACE MAY BE PAIRED WITH A COOLING UNIT THAT USES R-32 REFRIGERANT. IF THE COOLING UNIT PAIRED WITH THIS FURNACE DOES NOT USE R-32, THE R-32 FUNCTION IN THE FURNACE CONTROL BOARD NEEDS TO BE TURNED OFF. PLEASE SEE THE ELECTRICAL AND R-32 SECTIONS FOR MORE DETAILS. **REFRIGERANT SYSTEMS OTHER THAN 410A OR R-32 MAY REQUIRE AN ADDITIONAL MITIGATION CONTROL BOARD. REFER TO THE INSTALLATION MANUAL OF THE INDOOR EVAPORATOR COIL TO DETERMINE INSTALLATION REQUIREMENTS FOR THAT SUPPLIER'S REFRIGERANT DETECTION SYSTEM.**

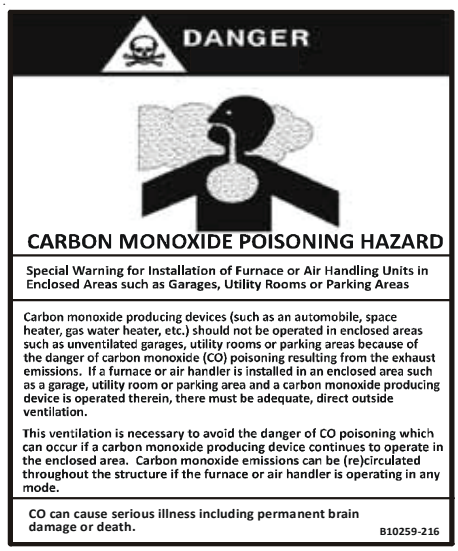



WARNING

IF THE INFORMATION IN THESE INSTRUCTIONS IS NOT FOLLOWED EXACTLY, A FIRE OR EXPLOSION MAY RESULT CAUSING PROPERTY DAMAGE, PERSONAL INJURY OR LOSS OF LIFE.

– DO NOT STORE OR USE GASOLINE OR OTHER FLAMMABLE VAPORS AND LIQUIDS IN THE VICINITY OF THIS OR ANY OTHER APPLIANCE.

– WHAT TO DO IF YOU SMELL GAS:
- DO NOT TRY TO LIGHT ANY APPLIANCE.
- DO NOT TOUCH ANY ELECTRICAL SWITCH; DO NOT USE ANY PHONE IN YOUR BUILDING.
- IMMEDIATELY CALL YOUR GAS SUPPLIER FROM A NEIGHBOR'S PHONE. FOLLOW THE GAS SUPPLIER'S INSTRUCTIONS. IF YOU CAN NOT REACH YOUR GAS SUPPLIER, CALL THE FIRE DEPARTMENT.

– INSTALLATION AND SERVICE MUST BE PERFORMED BY A QUALIFIED INSTALLER, SERVICE AGENCY OR THE GAS SUPPLIER.

WARNING

THIS PRODUCT CONTAINS OR PRODUCES A CHEMICAL OR CHEMICALS WHICH MAY CAUSE SERIOUS ILLNESS OR DEATH AND WHICH ARE KNOWN TO THE STATE OF CALIFORNIA TO CAUSE CANCER, BIRTH DEFECTS OR OTHER REPRODUCTIVE HARMS.

WARNING

TO PREVENT POSSIBLE PROPERTY DAMAGE, PERSONAL INJURY OR DEATH DUE TO ELECTRICAL SHOCK, THE FURNACE MUST BE LOCATED TO PROTECT THE ELECTRICAL COMPONENTS FROM WATER.

WARNING

HEATING UNIT SHOULD NOT BE UTILIZED WITHOUT REASONABLE ROUTINE, INSPECTION, MAINTENANCE AND SUPERVISION. IN THE EVENT THAT THE BUILDING MAY BE EXPOSED TO FREEZING TEMPERATURES AND WILL BE VACANT, ALL WATER-BEARING PIPES SHOULD BE DRAINED. THE BUILDING SHOULD BE PROPERLY WINTERIZED AND THE WATER SOURCE CLOSED. IN THE EVENT THAT THE BUILDING MAY BE EXPOSED TO FREEZING TEMPERATURES AND WILL BE VACANT, ANY HYDRONIC COIL UNITS SHOULD BE DRAINED AS WELL AND, IN SUCH CASE, ALTERNATIVE HEAT SOURCES SHOULD BE UTILIZED.

WARNING

SHOULD OVERHEATING OCCUR OR THE GAS SUPPLY FAIL TO SHUT OFF, TURN OFF THE MANUAL GAS SHUTOFF VALVE EXTERNAL TO THE FURNACE BEFORE TURNING OFF THE ELECTRICAL SUPPLY.

WARNING

POSSIBLE PROPERTY DAMAGE, PERSONAL INJURY OR DEATH DUE TO FIRE, EXPLOSION, SMOKE, SOOT, CONDENSATION, ELECTRICAL SHOCK, OR CARBON MONOXIDE MAY RESULT FROM IMPROPER INSTALLATION, REPAIR OPERATION, OR MAINTENANCE OF THIS PRODUCT.

WARNING

TO PREVENT PERSONAL INJURY OR DEATH DUE TO IMPROPER INSTALLATION, ADJUSTMENT, ALTERATION, SERVICE OR MAINTENANCE, REFER TO THIS MANUAL. FOR ADDITIONAL ASSISTANCE OR INFORMATION, CONSULT A QUALIFIED INSTALLER, SERVICER AGENCY OR THE GAS SUPPLIER.

WARNING

TO PREVENT PERSONAL INJURY OR DEATH DUE TO ASPHYXIATION, THIS FURNACE MUST BE CATEGORY I VENTED. DO NOT VENT USING CATEGORY III VENTING.
PROVISIONS MUST BE MADE FOR VENTING COMBUSTION PRODUCTS OUTDOORS THROUGH A PROPER VENTING SYSTEM. THIS LENGTH OF FLUE PIPE COULD BE A LIMITING FACTOR IN LOCATING THE FURNACE.

Additional Safety Considerations

- This furnace is approved for Category I Venting only.
- Provisions must be made for venting combustion products outdoors through a proper venting system. The length of flue pipe could be a limiting factor in locating the furnace.

Shipping Inspection

All units are securely packed in shipping containers tested according to International Safe Transit Association specifications. The carton must be checked upon arrival for external damage. If damage is found, a request for inspection by the carrier's agent must be made in writing immediately.

The furnace must be carefully inspected on arrival for damage and bolts or screws which may have come loose in transit. In the event of damage the consignee should:

1. Make a notation on delivery receipt of any visible damage to shipment or container.
2. Notify the carrier promptly and request an inspection.
3. With concealed damage, the carrier must be notified as soon as possible - preferably within five days.
4. File the claim with the following support documents within a nine month statute of limitations.
   - Original or certified copy of the Bill of Lading, or indemnity bond.
   - Original paid freight bill or indemnity in lieu thereof.
   - Original or certified copy of the invoice, showing trade and other discounts or reductions.
   - Copy of the inspection report issued by the carrier's representative at the time damage is reported to carrier.

The carrier is responsible for making prompt inspection of damage and for a thorough investigation of each claim. The distributor or manufacturer will not accept claims from dealers for transportation damage.

Keep this literature in a safe place for future reference.

Electrostatic Discharge (ESD) Precautions

NOTE: Discharge body's static electricity before touching unit. An electrostatic discharge can adversely affect electrical components.

Use the following precautions during furnace installation and servicing to protect the integrated control module from damage. By putting the furnace, the control, and the person at the same electrostatic potential, these steps will help avoid exposing the integrated control module to electrostatic discharge. This procedure is applicable to both installed and non-installed (ungrounded) furnaces.

1. Disconnect all power to the furnace. Do not touch the integrated control module or any wire connected to the control prior to discharging your body's electrostatic charge to ground.
2. Firmly touch a clean, unpainted, metal surface of the furnace near the control. Any tools held in a person's hand during grounding will be discharged.
3. Service integrated control module or connecting wiring following the discharge process in step 2. Use caution not to recharge your body with static electricity (i.e., do not move or shuffle your feet, do not touch ungrounded objects, etc.). If you come in contact with an ungrounded object, repeat step 2 before touching control or wires.
4. Discharge your body to ground before removing a new control from its container. Follow steps 1 through 3 if installing the control on a furnace. Return any old or new controls to their containers before touching any ungrounded object.

To The Installer

Before installing this unit, please read this manual thoroughly to familiarize yourself with specific items which must be adhered to, including but not limited to: unit maximum external static pressure, gas pressures, BTU input rating, proper electrical connections, circulating air temperature rise, minimum or maximum CFM, and motor speed connections, and venting. These furnaces are designed for Category I venting only.

NOTE: This unit should be installed in a manner so that it is not accessible to the public.

PRODUCT APPLICATION

This furnace is primarily designed for residential home-heating applications. It is NOT designed or certified for use in mobile homes, trailers or recreational vehicles. Neither is it designed or certified for outdoor applications. The furnace **must** be installed indoors (i.e., attic space, crawl space, or garage area provided the garage area is enclosed with an operating door).

This furnace can be used in the following non-industrial commercial applications:

Schools, Office Buildings, Churches, Retail Stores, Nursing Homes, Hotels/Motels, Common or Office Areas

In such applications, the furnace must be installed with the following stipulations:

- It must be installed per the installation instructions provided and per local and national codes.
- It must be installed indoors in a building constructed on site.
- It must be part of a ducted system and not used in a free air delivery application.
- It must not be used as a "make-up" air unit.
- All other warranty exclusions and restrictions apply.

This furnace may be used as a construction site heater **ONLY** if all of the following conditions are met:

- The vent system is permanently installed per these installation instructions.

- A room thermostat is used to control the furnace. Fixed jumpers that provide continuous heating CANNOT be used and can cause long term equipment damage. Bi-metal thermostats, or any thermostat affected by vibration must not be used during construction.
- Return air ducts are provided and sealed to the furnace.
- A return air temperature range between 60ºF (16ºC) and 80ºF (27ºC) is maintained.
- Air filters are installed in the system and replaced daily during construction and upon completion of construction.
- The input rate and temperature rise are set per the furnace rating plate.
- 100% outside air must be used for combustion during construction. Temporary ducting may be used to supply outside air to the furnace for combustion – do not connect this duct directly to the furnace. Size this duct according to NFPA 54/ANSI Z223.1 section for Combustion and Ventilation Air.
- The furnace heat exchanger, components, duct system, air filters and evaporator coils are thoroughly cleaned following final construction clean up by a qualified person.
- All furnace operating conditions (including ignition, input rate, temperature rise and venting) are verified by a qualified person according to these installation instructions.
- Furnace doors must be in place on the furnace while the furnace is operating in any mode.
- Damage or repairs due to failure to comply with these requirements are not covered under the warranty.

NOTE: THE COMMONWEALTH OF MASSACHUSETTS REQUIRES THAT THE FOLLOWING ADDITIONAL REQUIREMENTS MUST ALSO BE MET:

- Gas furnaces must be installed by a licensed plumber or gas fitter.
- A T-handle gas cock must be used.
- If the unit is to be installed in an attic, the passageway to and the service area around the unit must have flooring.

WARNING

TO PREVENT PROPERTY DAMAGE, PERSONAL INJURY, OR DEATH DUE TO FIRE, DO NOT INSTALL THIS FURNACE IN A MOBILE HOME, TRAILER, OR RECREATIONAL VEHICLE.

To ensure proper furnace operation, install, operate and maintain the furnace in accordance with these installation and operation instructions, all local building codes and ordinances. In their absence, follow the latest edition of the National Fuel Gas Code (NFPA 54/ ANSI Z223.1) and/or local plumbing or waste water codes, and other applicable codes.

A copy of the National Fuel Gas Code (NFPA 54/ANSI Z223.1) can be obtained from any of the following:

American National Standards Institute
25 West 43rd Street, 4th Floor
New York, NY 10036

National Fire Protection Association
1 Batterymarch Park
Quincy, MA 02169-7471

CSA International
8501 East Pleasant Valley
Independence, OH 44131

The rated heating capacity of the furnace should be greater than or equal to the total heat loss of the area to be heated. The total heat loss should be calculated by an approved method or in accordance with “ASHRAE Guide” or “Manual J-Load Calculations” published by the Air Conditioning Contractors of America.

In the USA, this furnace MUST be installed in accordance with the latest edition of the ANSI Z223.1 booklet entitled “National Fuel Gas Code” (NFPA 54), and the requirements or codes of the local utility or other authority having jurisdiction. Additional helpful publications available from the NFPA are, NFPA 90A - Installation of Air Conditioning and Ventilating System and NFPA 90B - Warm Air Heating and Air Conditioning System.

All venting shall be in accordance with the National Fuel Gas Code, ANSI Z223.1, or applicable local building and/or air conditioning codes.

NOTE: FURNACES WITH NOX SCREENS MEET THE CALIFORNIA NOX EMISSION STANDARDS AND CALIFORNIA SEASONAL EFFICIENCY STANDARDS. ANNUAL INSPECTIONS OF THE FURNACE AND ITS VENT SYSTEM IS STRONGLY RECOMMENDED.

LOCATION REQUIREMENTS AND CONSIDERATIONS

Your unit model type determines which installation procedures must be used. For *R9S80 models, you must follow instructions for Horizontal Left, Horizontal Right or Upflow installations only. These furnaces are not approved for Downflow installations.

*D9S80 models may be installed in the Downflow position as well as Horizontal Left & Horizontal Right positions.

WARNING

TO PREVENT POSSIBLE EQUIPMENT DAMAGE, PROPERTY DAMAGE, PERSONAL INJURY, OR DEATH, THE FOLLOWING BULLET POINTS MUST BE OBSERVED WHEN INSTALLING THIS UNIT.

Follow the instructions listed below when selecting a furnace location. Refer also to the guidelines provided in the *Combustion and Ventilation Air Requirements.*

- Centrally locate the furnace with respect to the proposed or existing air distribution system.
- Ensure the temperature of the return air entering the furnace is between 55°F and 100°F when the furnace is heating.
- Provisions must be made for venting combustion products outdoors through a proper venting system. The length of flue pipe could be a limiting factor in locating the furnace.
- Ensure adequate combustion air is available for the furnace. Improper or insufficient combustion air can expose building occupants to gas combustion products that could include carbon monoxide. Refer to *Combustion and Ventilation Air Requirements* section.
- The furnace must be level. If the furnace is to be set on a floor that may become wet or damp at times, the furnace should be supported above the floor on a concrete base sized approximately 1-½" larger than the base of the furnace.
- Ensure upflow or horizontal furnaces are not installed directly on carpeting, or any other combustible material. The only combustible material allowed is wood.
- Exposure to contaminated combustion air will result in safety and performance-related problems. Do not install the furnace where the combustion air is exposed to the following substances:
  chlorinated waxes or cleaners
  chlorine-based swimming pool chemicals
  water softening chemicals
  deicing salts or chemicals
  carbon tetrachloride
  halogen type refrigerants
  cleaning solutions (such as perchloroethylene)
  printing inks
  paint removers
  varnishes
  hydrochloric acid
  cements and glues
  antistatic fabric softeners for clothes dryers
  and masonry acid washing materials
- If the furnace is used in connection with a cooling unit, install the furnace upstream of the cooling coil. Additionally, a coil installed above an upflow furnace or under a counterflow furnace may be the same width as the furnace or may be one size larger than the furnace. **Example**: a "C" width coil may be installed with a "B" width furnace.
- For all applications, the front of the coil and furnace must face the same direction.
- If the furnace is installed in a residential garage, position the furnace so that the burners and ignition source are located not less than 18 inches (457 mm) above the floor. Protect the furnace from physical damage by vehicles.
- If the furnace is installed horizontally, the furnace access doors must be vertical so that the burners fire horizontally into the heat exchanger. Do not install the unit with the access doors on the "up/top" or "down/bottom" side of the furnace.
- Do not connect this furnace to a chimney flue that serves a separate appliance designed to burn solid fuel.
- Counterflow installation over a noncombustible floor. Before setting the furnace over the plenum opening, ensure the surface around the opening is smooth and level. A tight seal should be made between the furnace base and floor by using a silicon rubber caulking compound or cement grout.
- Counterflow installation over a combustible floor. If installation over a combustible floor becomes necessary, use an accessory subbase (see Specification Sheet applicable to your model for details). A special accessory subbase must be used for upright counterflow unit installations over any combustible material including wood. Follow the instructions with the subbase for proper installations.
- Do not install the furnace directly on carpeting, tile, or other combustible material other than wood flooring. **NOTE**: The subbase will not be required if an air conditioning coil is installed between the supply air opening on the furnace and the floor. The air conditioning coil must be downstream from the heat exchanger of the furnace.

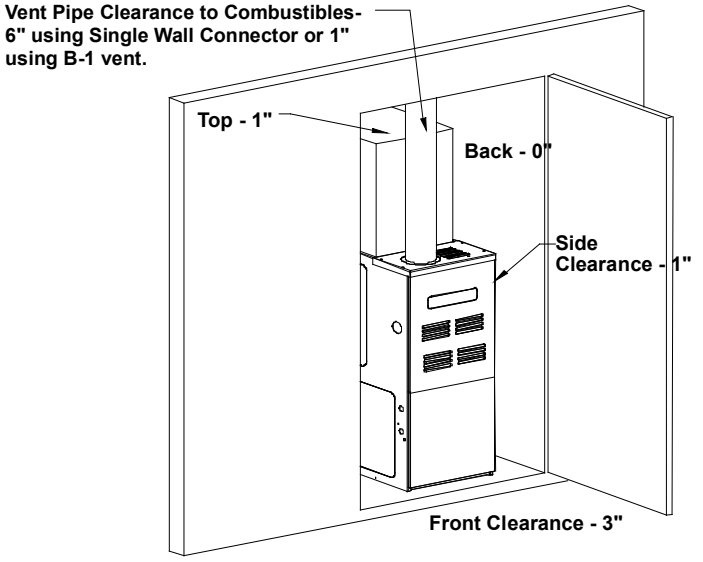

Figure 1

- Adequate combustion/ventilation air must be supplied to the closet.
- Furnace must be **completely** sealed to floor or base. Combustion/ventilation air supply pipes must terminate 12" from top of closet and 12" from floor of closet. DO NOT remove solid base plate for side return.

- Return air ducts must be **completely** sealed to the furnace and terminate outside the enclosure surfaces.

Clearances and Accessibility

Unobstructed front clearance of 24" **for servicing** is recommended.

VENT		SIDES	FRONT	BACK	TOP
B1-VENT	SINGLE				(PLENUM)
1"	6"	1"	3"	0"	1"

Top clearance for horizontal configuration - 1"

Installation Positions

*R9S80 model furnaces may be installed vertically (upflow) or horizontally with left or right side down. *D9S80 model furnaces may be installed vertically (downflow) or horizontally with left or right side down. Do not install this furnace on its back. For vertically installed upflow furnaces, return air ductwork may be attached to the side panel(s) and/or basepan. For upright counterflow furnaces, return air ductwork must be attached to the top end of the blower compartment. For any horizontally installed furnaces, return ductwork must be attached to the blower compartment end of the furnace.

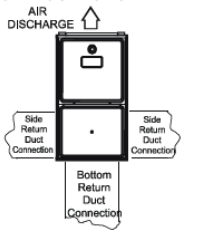

UPFLOW UPRIGHT

Figure 2A

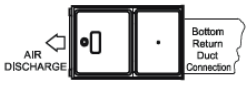

UPFLOW HORIZONTAL LEFT AIR DISCHARGE

Figure 2B



UPFLOW HORIZONTAL RIGHT AIR DISCHARGE

Figure 2C



Counterflow

Figure 2D

NOTE: Ductwork must never be attached to the back of the furnace.

Horizontal Installation

Line contact to framing is permitted when installed in the horizontal configuration. Line contact is defined as the portion of the cabinet that is formed by the intersection of the top and side. ACCESSIBILITY CLEARANCE, WHERE GREATER, SHOULD TAKE PRECEDENCE OVER MINIMUM FIRE PROTECTION CLEARANCE. A gas-fired furnace for installation in a residential garage must be installed so that the ignition source and burners are located not less than eighteen inches (18") above the floor and is protected or located to prevent physical damage by vehicles. A gas furnace must not be installed directly on carpeting, tile, or other combustible materials other than wood flooring.

Furnace Suspension

If suspending the furnace from rafters or joist, use ⅜" threaded rod and 2"x2"x⅜" angle iron as shown below. The length of rod will depend on the application and the clearances necessary.

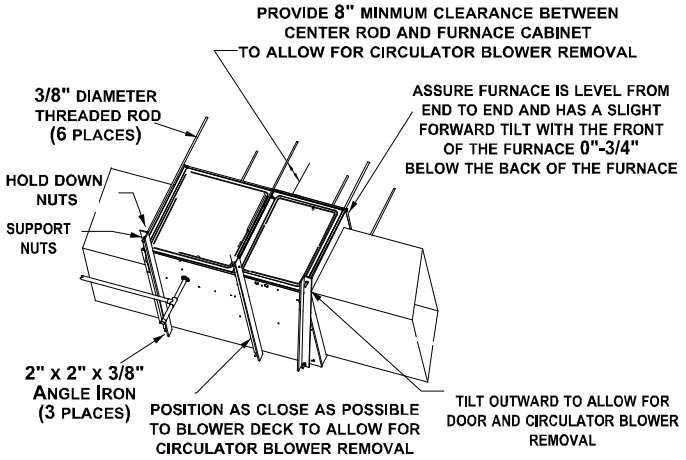

Suspended Furnace
Figure 2

Auxiliary Drain Pan

An auxiliary/secondary drain pan should be installed under a condensing furnace and/or indoor coil when any potential leakage could cause damage to ceilings, floors or other areas below the installation location. The auxiliary drain pan should be at least 1-1/2 inches deep, 3 inches larger than the unit and constructed of corrosion-resistant material. The drain pan should have a drain line connected to the pan and the drain line should be pitched downward away from the pan a minimum of 1/8" per foot of drain line. The drain line should terminate in a location where the water dripping from the drain line will alert the occupant that a problem exists. The auxiliary drain pan should also be equipped with a water level detection device conforming to UL 508 that will shut off the equipment served prior to overflow of the pan.

For upflow and horizontal installations, the furnace and/or indoor coil should be installed so that the equipment is at least 1-1/2 inches above the drain pan. Do not install the furnace and/or indoor coil directly into the auxiliary/secondary drain pan and do not use any wood product in the drain pan to elevate the furnace. Bricks, 2-inch concrete cap blocks, metal furnace stands, or furnace blocks can be used to elevate the furnace. For an upflow furnace installation, seal the entire bottom of the furnace before setting the furnace at least 1-1/2 inches above the drain pan.

Failure to properly install an auxiliary/secondary drain pan for a furnace and/or indoor coil can result in water damage to components and the furnace's metal cabinet.

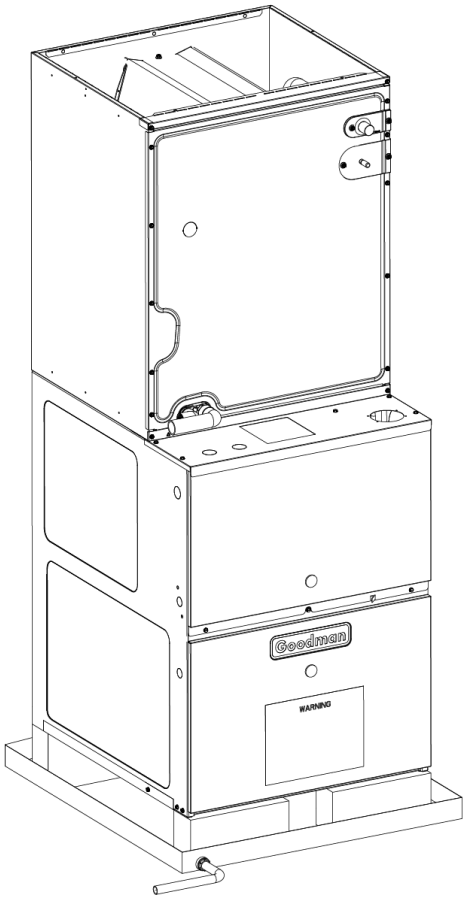

FIGURE 3

EXISTING FURNACE REMOVAL

WARNING

CARBON MONOXIDE POISONING HAZARD

FAILURE TO FOLLOW THE STEPS OUTLINED BELOW FOR EACH APPLIANCE CONNECTED TO THE VENTING SYSTEM BEING PLACED INTO OPERATION COULD RESULT IN CARBON MONOXIDE POISONING OR DEATH.

THE FOLLOWING STEPS SHALL BE FOLLOWED WITH EACH APPLIANCE CONNECTED TO THE VENTING SYSTEM PLACED IN OPERATION, WHILE ANY OTHER APPLIANCES CONNECTED TO THE VENTING SYSTEM ARE NOT IN OPERATION:

1. **SEAL ANY UNUSED OPENINGS IN THE VENTING SYSTEM.**
2. **INSPECT THE VENTING SYSTEM FOR PROPER SIZE AND HORIZONTAL PITCH, AS REQUIRED BY THE NATIONAL FUEL GAS CODE, ANSI Z223.1 OR THE NATURAL GAS AND PROPANE INSTALLATION CODE, CSA B149.1-15 AND THESE INSTRUCTIONS. DETERMINE THAT THERE IS NO BLOCKAGE OR RESTRICTION, LEAKAGE, CORROSION AND OTHER DEFICIENCIES WHICH COULD CAUSE AN UNSAFE CONDITION.**
3. **AS FAR AS PRACTICAL, CLOSE ALL BUILDING DOORS AND WINDOWS AND ALL DOORS BETWEEN THE SPACE IN WHICH THE APPLIANCE(S) CONNECTED TO THE VENTING SYSTEM ARE LOCATED AND OTHER SPACES OF THE BUILDING.**
4. **CLOSE FIREPLACE DAMPERS.**
5. **TURN ON CLOTHES DRYERS AND ANY APPLIANCE NOT CONNECTED TO THE VENTING SYSTEM. TURN ON ANY EXHAUST FANS, SUCH AS RANGE HOODS AND BATHROOM EXHAUSTS, SO THEY SHALL OPERATE AT MAXIMUM SPEED. DO NOT OPERATE A SUMMER EXHAUST FAN.**
6. **FOLLOW THE LIGHTING INSTRUCTIONS. PLACE THE APPLIANCE BEING INSPECTED IN OPERATION. ADJUST THERMOSTAT SO APPLIANCE SHALL OPERATE CONTINUOUSLY.**
7. **TEST FOR SPILLAGE FROM DRAFT HOOD APPLIANCES AT THE DRAFT HOOD RELIEF OPENING AFTER 5 MINUTES OF MAIN BURNER OPERATION. USE THE FLAME OF A MATCH OR CANDLE.**
8. **IF IMPROPER VENTING IS OBSERVED DURING ANY OF THE ABOVE TESTS, THE VENTING SYSTEM MUST BE CORRECTED IN ACCORDANCE WITH THE NATIONAL FUEL GAS CODE ANSI Z223.1/NFPA 54 AND/OR NATIONAL GAS AND PROPANE INSTALLATION CODE CSA B149.1-15.**
9. **AFTER IT HAS BEEN DETERMINED THAT EACH APPLIANCE CONNECTED TO THE VENTING SYSTEM PROPERLY VENTS WHEN TESTED AS OUTLINED ABOVE, RETURN DOORS, WINDOWS, EXHAUST FANS, FIREPLACE DAMPERS AND ANY OTHER GAS BURNING APPLIANCE TO THEIR PREVIOUS CONDITIONS OF USE.**

Corrections must be in accordance with the latest edition of the National Fuel Gas Code NFPA 54/ANSI Z223.1 and/or CAN/CSA B149 Installation Codes.

If resizing is required on any portion of the venting system, use the appropriate table in the latest edition of the National Fuel Gas Code ANSI Z223.1.

THERMOSTAT LOCATION

In an area having good air circulation, locate the thermostat about five feet high on a vibration-free inside wall. Do not install the thermostat where it may be influenced by any of the following:

- Drafts, or dead spots behind doors, in corners, or under cabinets.
- Hot or cold air from registers.
- Radiant heat from the sun.
- Light fixtures or other appliances.
- Radiant heat from a fireplace.

- Concealed hot or cold water pipes, or chimneys.
- Unconditioned areas behind the thermostat, such as an outside wall.

Consult the instructions packaged with the thermostat for mounting instructions and further precautions.

COMBUSTION AND VENTILATION AIR REQUIREMENTS

WARNING

To avoid property damage, personal injury or death, sufficient fresh air for proper combustion and ventilation of flue gas must be supplied. Most homes require outside air be supplied into the furnace area.

Improved construction and additional insulation in buildings have reduced heat loss by reducing air infiltration and escape around doors and windows. These changes have helped in reducing heating/cooling costs but have created a problem supplying combustion and ventilation air for gas fired and other fuel burning appliances. Appliances that pull air out of the house (clothes dryers, exhaust fans, fireplaces, etc.) increase the problem by starving appliances for air.

House depressurization can cause back drafting or improper combustion of gas-fired appliances, thereby exposing building occupants to gas combustion products that could include carbon monoxide.

If this furnace is to be installed in the same space with other gas appliances, such as a water heater, ensure there is an adequate supply of combustion and ventilation air for all appliances. Refer to the latest edition of the National Fuel Gas Code NFPA 54/ANSI Z223.1 or CAN/CSA B149 Installation Codes or applicable provisions of the local building codes for determining the combustion air requirements for the appliances.

This furnace must use indoor air for combustion. It cannot be installed as a direct vent (i.e., sealed combustion) furnace.

Most homes will require outside air be supplied to the furnace area by means of ventilation grilles or ducts connecting directly to the outdoors or spaces open to the outdoors such as attics or crawl spaces.

The *R9S80 and *D9S80 furnaces are provided with a combustion air intake pipe kit which adds a combustion air intake pipe instead of relying on the louvers for combustion air. Please refer to the installation manual provided with the kit for additional information and instructions.

Category I Venting (Vertical Venting)

WARNING

To prevent possible personal injury or death due to asphyxiation, this furnace must be Category I vented. Do not vent using Category III venting.

Category I Venting is venting at a non-positive pressure. A furnace vented as Category I is considered a fan-assisted appliance and the vent system does not have to be “gas tight”. **NOTE:** Gas furnaces with induced draft blowers draw products of combustion through a heat exchanger allowing, in some instances, common venting with natural draft appliances (i.e. water heaters). All installations must be vented in accordance with National Fuel Gas Code NFPA 54/ANSI Z223.1 - latest edition.

NOTE: The vertical height of the Category I venting system must be at least as great as the horizontal length of the venting system.

WARNING

To prevent possible personal injury or death due to asphyxiation, common venting with other manufacturer’s induced draft appliances is not allowed.

The minimum vent diameter for the Category I venting system is as shown:

MODEL	MINIMUM VENT	
	UPFLOW	COUNTER FLOW
040	3 inch	3 inch
060	4 inch	4 inch
080	4 inch	4 inch
100	5 inch	4 inch
120	5 inch	N/A

Under some conditions, larger vents than those shown above may be required or allowed. *When an existing furnace is removed from a venting system serving other appliances*, the venting system may be too large to properly vent the remaining attached appliances.

Furnaces are shipped with the induced draft blower discharging from the top of the furnace (“Top” is as viewed for an upflow installation.) The induced draft blower on *R9S80 models can be rotated 90 degrees for Category I venting. For furnaces installed vertically or horizontally, a four-inch single wall pipe can be used to extend the induced draft blower outlet ½” beyond the furnace cabinet.

On *R9S80 furnaces installed upflow or horizontally with left side down, the draft inducer may be rotated to discharge from the right side of the cabinet. When rotating the inducer a chimney transition bottom kit (part # 4053501S) is needed for proper alignment of the inducer outlet and the vent exit hole in the side of the cabinet. The inducer may NOT be rotated on *D9S80 model furnaces regardless of installation position.

THIS PRODUCT IS NOT DESIGNED FOR COUNTERCLOCKWISE INDUCED DRAFT BLOWER ROTATION.

Vent the furnace in accordance with the National Fuel Gas Code NFPA 54/ANSI Z223.1 - latest edition.

Venting

THIS FURNACE IS NOT CERTIFIED TO BE HORIZONTALLY VENTED.

To rotate the induced draft blower clockwise, you will need to purchase one (4053501S) chimney transition bottom kit.

1. Disconnect electrical power from the furnace.
2. Disconnect the induced draft blower power leads, flue pipe, and pressure switch tubing.
3. Remove the round cutout from the right side of the wrapper.
4. Remove and save the four screws that fasten the induced draft blower to the flue collector box.
5. Remove and save the three screws that hold the chimney assembly to the induced draft blower.
6. Remove and save the four screws that fasten the chimney top to the chimney bottom.
7. Remove the chimney transition bottom from the transition bottom kit.
8. Install the chimney top with the four screws retained from step 6 onto the new chimney transition bottom from the transition bottom kit.
9. Install chimney assembly with the three screws retained from step 5 onto the induced draft blower.
10. Reinstall the induced draft blower rotating it 90 degrees clockwise from the original upflow configuration using the four screws retained in step 3. Ensure the gasket located between the induced draft blower and the collector box is rotated accordingly.
11. Reconnect the induced draft blower power leads. **NOTE**: If the wires are not long enough, pull extra wire from the wire bundle in the blower compartment.
12. Reconnect the flue pipe, and the pressure switch tubing. Ensure that all wires and the pressure switch tubing is at least one inch from the flue pipe, or any other hot surface.
13. Restore power to furnace.

Counterflow units are shipped with the induced draft blower discharging from the top of the furnace (“Top” as viewed for a counterflow installation).

Vent the furnace in accordance with the National Fuel Gas Code NFPA54/ANSI Z223.1 - latest edition.

WARNING

Never allow the products of combustion, including carbon monoxide, to enter the return ductwork or circulation air supply.

MASONRY CHIMNEYS

WARNING

Possibility of property damage, personal injury, death or damaging condensation can occur inside masonry chimneys when a single fan-assisted Category I appliance (80% AFUE furnace) is vented without adequate dilution air. Do not connect an 80% furnace to a masonry chimney unless the furnace is common vented with a draft hood equipped appliance or the chimney is lined with a metal liner or Type B metal vent. All installations using masonry chimneys must be sized in accordance with appropriate venting tables. If an 80% furnace is common vented with a draft hood equipped appliance, the potential for condensation damage may still exist with extremely cold conditions, long vent connectors, exterior chimneys, or any combination of these conditions. The risk of condensation damages is best avoided by using masonry chimney as a pathway for properly sized metal liner or Type B metal vent.

Masonry Chimney Terminations

A masonry chimney used as a vent for gas fired equipment must extend at least three feet above the highest point where it passes through the roof. It must extend at least two feet higher than any portion of a building within a horizontal distance of 10 feet. In addition, the chimney must terminate at least three feet above any forced air inlet located within 10 feet. The chimney must extend at least five feet above the highest connected equipment draft hood outlet or flue collar.

ELECTRICAL CONNECTIONS

WARNING

HIGH VOLTAGE!

To avoid the risk of electrical shock, wiring to the unit must be polarized and grounded.



CAUTION

Label all wires prior to disconnection when servicing controls. Wiring errors can cause improper and dangerous operation. Verify proper operation after servicing.

WARNING

HIGH VOLTAGE!

To avoid risk of injury, electrical shock or death, the furnace must be electrically grounded in accordance with local codes or in their absence, with the latest edition of the National Electric Code.



WARNING

Edges of sheet metal holes may be sharp. Use gloves as a precaution when removing hole plugs.

Wiring Harness

The wiring harness is an integral part of this furnace. Field alteration to comply with electrical codes should not be required. Wires are color coded for identification purposes. Refer to the wiring diagram for wire routings. If any of the original wire as supplied with the furnace must be replaced, it must be replaced with wiring material having a temperature rating of at least 105°C. Any replacement wiring must be a copper conductor.

115 Volt Line Connections

Before proceeding with electrical connections, ensure that the supply voltage, frequency, and phase correspond to that specified on the unit rating plate. Power supply to the furnace must be NEC Class 1, and must comply with all applicable codes. The furnace must be electrically grounded in accordance with local codes or, in their absence, with the latest edition of The National Electric Code, ANSI NFPA 70 and/or The Canadian Electric Code CSA C22.1.

Use a separate fused branch electrical circuit containing properly sized wire, and fuse or circuit breaker. The fuse or circuit breaker must be sized in accordance with the maximum overcurrent protection specified on the unit rating plate. An electrical disconnect must be provided at the furnace location.

Connect hot, neutral, and ground wires as shown in the wiring diagram located on the unit's blower door. Metal conduit is not considered a substitute for an actual ground wire to the unit.

Line polarity must be observed when making field connections. Line voltage connections can be made through either the right or left side panel. The furnace is shipped configured for a right side electrical connection with the junction box located inside the burner compartment (blower compartment for downflows). To make electrical connections through the opposite side of the furnace, the junction box must be relocated to the other side of the burner (or blower) compartment prior to making electrical connections. To relocate the junction box, follow the steps shown below.

NOTE: Wire routing must not interfere with circulator blower operation, filter removal, or routine maintenance.

Junction Box Relocation

WARNING

Edges of sheet metal holes may be sharp. Use gloves as a precaution when removing hole plugs.

WARNING

To prevent personal injury or death due to electric shock, disconnect electrical power before installing or servicing this unit.

1. Remove both doors from the furnace.
2. Remove and save the screws holding the junction box to the right side of the furnace.
3. Attach the junction box to the left side of the furnace, using the screws removed in step 2.
4. Check the location of the wiring. Confirm that it will not be damaged by heat from the burners or by the rotation of the fan. Also confirm that wiring location will not interfere with filter removal or other maintenance.

IMPORTANT NOTE: To avoid possible equipment malfunction, route the low voltage wires to avoid interference with filter removal or other maintenance.

WARNING

HIGH VOLTAGE!

To avoid risk of injury, electrical shock or death, the furnace must be electrically grounded in accordance with local codes or in their absence, with the latest edition of the National Electric Code.



To ensure proper unit grounding, the ground wire should run from the furnace ground screw located inside the furnace junction box all the way back to the electrical panel. **NOTE:** Do not use gas piping as an electrical ground. To confirm proper unit grounding, turn off the electrical power and perform the following check.

1. Measure resistance between the neutral (white) connection and one of the burners.
2. Resistance should measure 10 ohms or less.

This furnace is equipped with a blower door interlock switch which interrupts unit voltage when the blower door is opened for servicing. Do not defeat this switch.

GAS SUPPLY AND PIPING

The furnace rating plate includes the approved furnace gas input rating and gas types. The furnace must be equipped to operate on the type of gas applied. This includes any conversion kits required for alternate fuels and/or high altitude.

CAUTION

TO PREVENT UNRELIABLE OPERATION OR EQUIPMENT DAMAGE, THE INLET GAS SUPPLY PRESSURE MUST BE AS SPECIFIED ON THE UNIT RATING PLATE WITH ALL OTHER HOUSEHOLD GAS FIRED APPLIANCES OPERATING.

Inlet gas supply pressures must be maintained within the ranges specified in the following table. The supply pressure must be constant and available with all other household gas fired appliances operating. The minimum gas supply pressure must be maintained to prevent unreliable ignition. The maximum must not be exceeded to prevent unit overfiring.

NOTE: DO NOT REMOVE THE GAS VALVE INLET PLUG BEFORE THE GAS LINE IS INSTALLED. REPLACE IF WATER OR DEBRIS HAS BEEN INTRODUCED.

INLET GAS SUPPLY PRESSURE		
Natural Gas	Minimum: 4.5" w.c.	Maximum: 10.0" w.c.
Propane Gas	Minimum: 11.0" w.c.	Maximum: 13.0" w.c.

NOTE: ADJUSTING THE MINIMUM SUPPLY PRESSURE BELOW THE LIMITS IN THE ABOVE TABLE COULD LEAD TO UNRELIABLE IGNITION. GAS INPUT TO THE BURNERS MUST NOT EXCEED THE RATED INPUT SHOWN ON THE RATING PLATE. OVERFIRING OF THE FURNACE CAN RESULT IN PREMATURE HEAT EXCHANGER FAILURE. GAS PRESSURES IN EXCESS OF 13 INCHES WATER COLUMN CAN ALSO CAUSE PERMANENT DAMAGE TO THE GAS VALVE.

At all altitudes, the manifold pressure must be within 0.3 inches w.c. of that listed in the Specification Sheet applicable to your model for the fuel used. At all altitudes and with either fuel, the air temperature rise must be within the range listed on the furnace nameplate. Should this appliance be converted to LP, refer to the instructions included in the factory authorized LP conversion kit.

HIGH ALTITUDE DERATE

When this furnace is installed at high altitude, the appropriate High Altitude orifice kit must be applied. This is required due to the natural reduction in the density of both the gas fuel and combustion air as altitude increases. The kit will provide the proper design certified input rate within the specified altitude range.

High altitude kits are purchased according to the installation altitude and usage of either natural or propane gas. Consult the furnace Specification Sheet for appropriate kits.

Do **not** derate the furnace by adjusting the manifold pressure to a lower pressure than specified on the furnace rating plate. The combination of the lower air density and a lower manifold pressure will prohibit the burner orifice from drawing the proper amount of air into the burner. This may cause incomplete combustion, flashback, and possible yellow tipping.

In some areas the gas supplier may artificially derate the gas in an effort to compensate for the effects of altitude. If the gas is artificially derated, the appropriate orifice size must be determined based upon the BTU/ft^3 content of the derated gas and the altitude. Refer to the National Fuel Gas Code, NFPA 54/ANSI Z223.1, and information provided by the gas supplier to determine the proper orifice size.

A different pressure switch may be required at high altitude regardless of the BTU/ft^3 content of the fuel used. Consult the furnace Specification Sheet for pressure switch.

Consult the furnace Specification Sheet for appropriate manufacturer's kits for propane gas and/or high altitude installations. The indicated kits must be used to insure safe and proper furnace operation. All conversions must be performed by a qualified installer, or service agency.

PROPANE GAS CONVERSION

WARNING

POSSIBLE PROPERTY DAMAGE, PERSONAL INJURY OR DEATH MAY OCCUR IF THE CORRECT CONVERSION KITS ARE NOT INSTALLED. THE APPROPRIATE KITS MUST BE APPLIED TO ENSURE SAFE AND PROPER FURNACE OPERATION. ALL CONVERSIONS MUST BE PERFORMED BY A QUALIFIED INSTALLER OR SERVICE AGENCY.

This unit is configured for natural gas. The appropriate manufacturer's propane gas conversion kit must be applied for propane gas installations.

Altitude	Gas	Kit	Orifice	Manifold Pressure	Pressure Switch
0 - 4500	Natural	None	#45	3.5" w .c.	None
	Propane	LPM-31	#55	10.0" w .c.	

If converting to LP gas, it is recommended that an LPLP0* kit also be installed. The use of this kit will prevent the furnace from firing when the LP gas supply pressure is too low to support proper combustion.

Gas Valve

This unit is equipped with a 24 volt gas valve controlled during furnace operation by the integrated control module. As shipped, the valve is configured for natural gas. The valve is field convertible for use with propane gas by replacing the regulator spring with a propane gas spring from an appropriate manufacturer's propane gas conversion kit. Taps for measuring the gas supply pressure and manifold pressure are provided on the valve.

The gas valve has a manual ON/OFF control located on the valve itself. This control may be set only to the "ON" or "OFF" position. Refer to the lighting instructions label or *Startup Procedure & Adjustment* for use of this control during start up and shut down periods.

Gas Piping Connections

When sizing gas lines, be sure to include all appliances which will operate simultaneously.

The gas piping supplying the furnace must be properly sized based on the gas flow required, specific gravity of the gas, and length of the run. The gas line installation must comply with local codes, or in their absence, with the latest edition of the National Fuel Gas Code, NFPA 54/ANSI Z223.1.

Natural Gas Capacity of Pipe
In Cubic Feet of Gas Per Hour (CFH)

Length of	Nominal Black Pipe Size				
Pipe in Feet	1/2"	3/4"	1"	1 1/4"	1 1/2"
10	132	278	520	1050	1600
20	92	190	350	730	1100
30	73	152	285	590	980
40	63	130	245	500	760
50	56	115	215	440	670
60	50	105	195	400	610
70	46	96	180	370	560
80	43	90	170	350	530
90	40	84	160	320	490
100	38	79	150	305	460

(Pressure 0.5 psig or less and pressure drop of 0.3" W.C.; Based on 0.60 Specific Gravity Gas)

$$CFH = \frac{\text{BTUH Furnace Input}}{\text{Heating Value of Gas (BTU/Cubic Foot)}}$$

To connect the furnace to the building's gas piping, the installer must supply a ground joint union, drip leg, manual shutoff valve, and line and fittings to connect to gas valve. In some cases, the installer may also need to supply a transition piece from ½" pipe to a larger pipe size.

The following stipulations apply when connecting gas piping.

- Gas piping must be supported external to the furnace cabinet so that the weight of the gas line does not distort the burner rack, manifold or gas valve.
- Use black iron or steel pipe and fittings for the building piping.
- Use pipe joint compound on male threads only. Pipe joint compound must be resistant to the action of the fuel used.
- Use ground joint unions.
- Install a drip leg to trap dirt and moisture before it can enter the gas valve. The drip leg must be a minimum of three inches long.
- Use two pipe wrenches when making connection to the gas valve to keep it from turning. The orientation of the gas valve on the manifold must be maintained as shipped from the factory.
- Install a manual shutoff valve between the gas meter and unit within six feet of the unit. If a union is installed, the union must be downstream of the manual shutoff valve, between the shutoff valve and the furnace.
- Tighten all joints securely.
- Connect the furnace to the building piping by one of the following methods:
  – Rigid metallic pipe and fittings.
  – Semi-rigid metallic tubing and metallic fittings. Aluminum alloy tubing must not be used in exterior locations.
  – Use listed gas appliance connectors in accordance with their instructions. Connectors must be fully in the same room as the furnace.
  – Protect connectors and semi-rigid tubing against physical and thermal damage when installed. Ensure aluminum-alloy tubing and connectors are coated to protect against external corrosion when in contact with masonry, plaster, or insulation, or subjected to repeated wetting by liquids such as water (except rain water), detergents, or sewage.

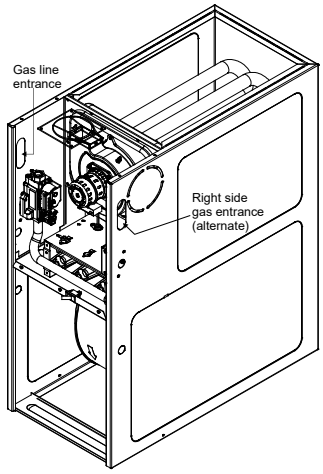

General Furnace Layout
Figure 4

When the gas piping enters through the side of the furnace, the installer must supply the following fittings (starting from the gas valve):

- Close nipple.
- 90 degree elbow.
- Straight pipe to reach the exterior of the furnace.

A ground joint union, drip leg, and manual shutoff valve must also be supplied by the installer. In some cases, the installer may also need to supply a transition piece from ½" to another pipe size.

Gas Piping Checks

Before placing unit in operation, leak test the unit and gas connections.

WARNING

To avoid the possibility of explosion or fire, never use a match or open flame to test leaks.

Check for leaks using an approved chloride-free soap and water solution, an electronic combustible gas detector, or other approved testing methods.

WARNING

To prevent property damage or personal injury due to fire, the following instructions must be performed regarding gas connections, pressure testing, location of shutoff valve and installation of gas piping.

NOTE: Never exceed specified pressures for testing. Higher pressure may cause gas valve failure.

Disconnect this unit and shutoff valve from the gas supply piping system before pressure testing the supply piping system with pressures in excess of ½ psig (3.48 kPa).

This unit must be isolated from the gas supply system by closing its manual shutoff valve before pressure testing of gas supply piping system with test pressures equal to or less than ½ psig (3.48 kPa).

Propane Gas Tanks and Piping

A gas detecting warning system is the only reliable way to detect a propane gas leak. Rust can reduce the level of odorant in propane gas. Do not rely on your sense of smell. Contact a local propane gas supplier about installing a gas detecting warning system. If the presence of gas is suspected, follow the instructions on Page 3 of this manual.

All propane gas equipment must conform to the safety standards of the National Fire Protection Association, NFPA 58

For satisfactory operation, propane gas pressure must be 10 inch WC at the furnace manifold with all gas appliances in operation. Maintaining proper gas pressure depends on three main factors:

1. Vaporization rate, depending on temperature of the liquid, and “wetted surface” area of the container or containers.
2. Proper pressure regulation (Two-stage regulation is recommended for both cost and efficiency).
3. Pressure drop in lines between regulators, and between second stage regulator and the appliance. Pipe size will depend on length of pipe run and total load of all appliances.

Complete information regarding tank sizing for vaporization, recommended regulator settings, and pipe sizing is available from most regulator manufacturers and propane gas suppliers.

Use a pipe thread compound that is approved for natural gas and LP Gas.

Refer to the following illustration for typical propane gas installations and piping.

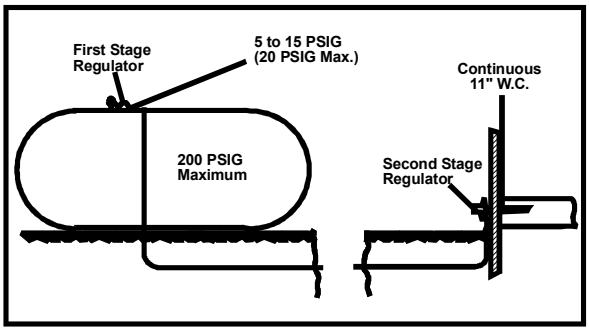

Propane Gas Installation (Typ.)
Figure 5

Propane Gas Piping Charts

Sizing Between First and Second Stage Regulator*
Maximum Propane Capacities listed are based on 2 psig pressure drop at 10 psig setting.
Capacities in 1,000 BTU/hour.

Pipe or Tubing Length, Feet	Tubing Size, O.D. Type L					Nominal Pipe Size Schedule 40	
	3/8"	1/2"	5/8"	3/4"	7/8"	1/2"	3/4"
10	730	1,700	3,200	5,300	8,300	3,200	7,500
20	500	1,100	2,200	3,700	5,800	2,200	4,200
30	400	920	2,000	2,900	4,700	1,800	4,000
40	370	850	1,700	2,700	4,100	1,600	3,700
50	330	770	1,500	2,400	3,700	1,500	3,400
60	300	700	1,300	2,200	3,300	1,300	3,100
80	260	610	1,200	1,900	2,900	1,200	2,600
100	220	540	1,000	1,700	2,600	1,000	2,300
125	200	490	900	1,400	2,300	900	2,100
150	190	430	830	1,300	2,100	830	1,900
175	170	400	780	1,200	1,900	770	1,700
200	160	380	730	1,100	1,800	720	1,500

Sizing Between Second Stage and Appliance Regulator*
Maximum Propane Capacities listed are based on 2 psig pressure drop at 10 psig setting.
Capacities in 1,000 BTU/hour.

Pipe or Tubing Length, Feet	Tubing Size, O.D. Type L						Nominal Pipe Size Schedule 40				
	3/8"	1/2"	5/8"	3/4"	7/8"	1-1/8"	1/2"	3/4"	1"	1-1/4"	1-1/2"
10	39	92	199	329	501	935	275	567	1,071	2,205	3,307
20	26	62	131	216	346	630	189	393	732	1,496	2,299
30	21	50	107	181	277	500	152	315	590	1,212	1,858
40	19	41	90	145	233	427	129	267	504	1,039	1,559
50	18	37	79	131	198	376	114	237	448	910	1,417
60	16	35	72	121	187	340	103	217	409	834	1,275
80	13	29	62	104	155	289	89	185	346	724	1,066
100	11	26	55	90	138	255	78	162	307	630	976
125	10	24	48	81	122	224	69	146	275	567	866
150	9	21	43	72	109	202	63	132	252	511	787
200	8	19	39	66	100	187	54	112	209	439	665
250	8	17	36	60	93	172	48	100	185	390	590

CIRCULATING AIR

WARNING

NEVER ALLOW THE PRODUCTS OF COMBUSTION, INCLUDING CARBON MONOXIDE, TO ENTER THE RETURN DUCT WORK OR CIRCULATION AIR SUPPLY.

Duct systems and register sizes must be properly designed for the CFM and external static pressure rating of the furnace. Ductwork should be designed in accordance with the recommended methods of “Air Conditioning Contractors of America” Manual D.

A duct system must be installed in accordance with Standards of the National Fire Protection Association, NFPA 90A and 90B.

A closed return duct system must be used, with the return duct connected to the furnace. **NOTE:** Ductwork must never be attached to the back of the furnace. For installations requiring more than 1600 CFM, use a bottom return or two sided return to help reduce noise and provide smoother airflow for heating. Supply and return connections to the furnace may be made with flexible joints to reduce noise transmission. To prevent the blower from interfering with combustion air or draft when a central return is used, a connecting duct must be installed between the unit and the utility room wall. A room, closet, or alcove must not be used as a return air chamber.

When the furnace is used in connection with a cooling unit, the furnace should be installed upstream of the cooling coil.

When the furnace is installed without a cooling coil, it is recommended that a removable access panel be provided in the outlet air duct. This opening shall be accessible when the furnace is installed and shall be of such a size that the heat exchanger can be viewed for visual light inspection or such that a sampling probe can be inserted into the air stream. The access panel must be made to prevent air leaks when the furnace is in operation.

When furnace duct(s) supply air outside the space containing the furnace, a return air duct must terminate in the same space as the supply duct and be sealed to the furnace casing.
When the furnace is heating, the temperature of the return air entering the furnace must be between 55°F and 100°F.

CHECKING DUCT STATIC

Refer to your furnace rating plate for the maximum ESP (external duct static) rating.

Total external static refers to static pressure created by all components external to the furnace cabinet. Cooling coils, filters, ducts, grilles, registers must all be considered when reading your total external static pressure. The supply duct pressure must be read between the furnace and the cooling coil. This reading is usually taken by removing the “A” shaped block off plate from the end on the coil; drilling a test hole in it and reinstalling the block off plate. Take a duct static reading at the test hole. Tape up the test hole after your test is complete. The negative pressure must be read between the filter and the furnace blower.

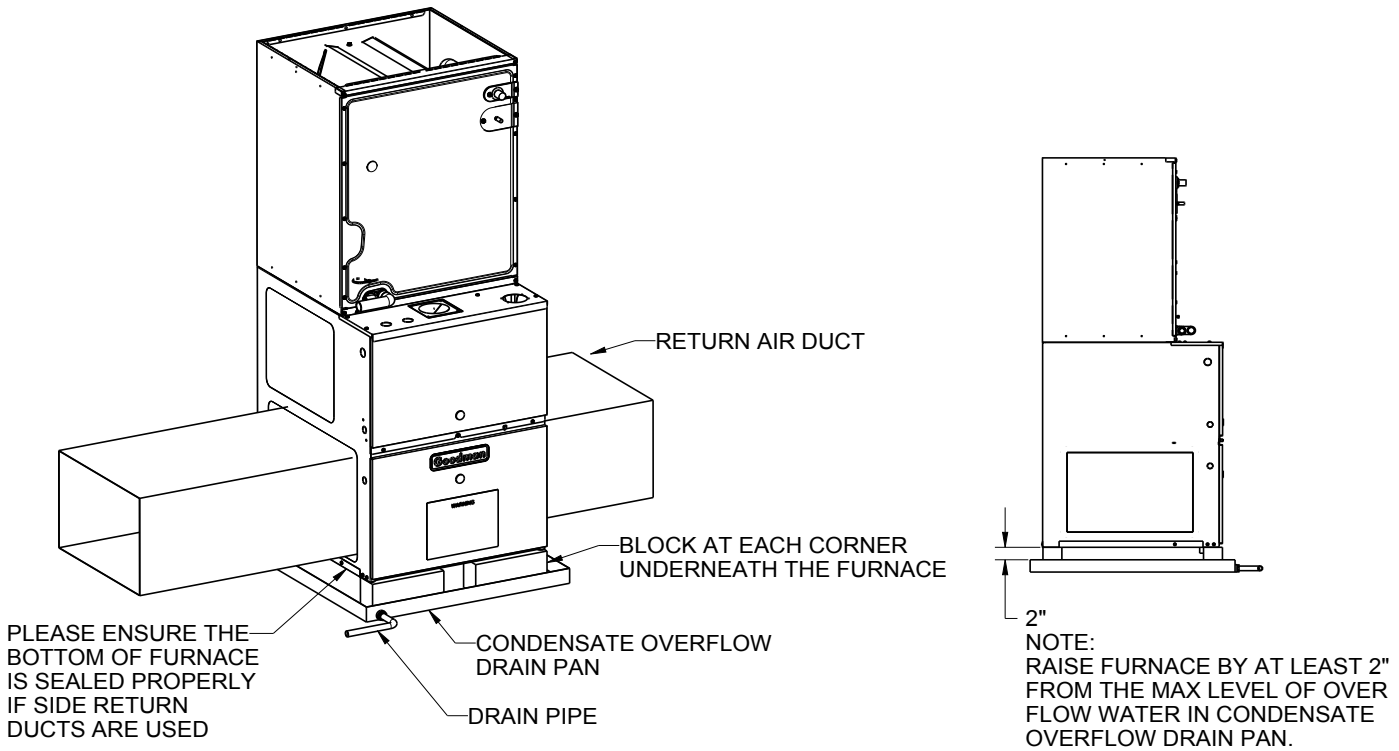

FIGURE 6

Too much external static pressure will result in insufficient air that can cause excessive temperature rise. This can cause limit switch tripping and heat exchanger failure.

To determine total external duct static pressure, proceed as follows:

1. With clean filters in the furnace, use a manometer to measure the static pressure of the return duct at the inlet of the furnace (Negative Pressure).
2. Measure the static pressure of the supply duct (Positive Pressure).
3. The difference between the two numbers is the total external static pressure.

EXAMPLE:
static reading from return duct = -.1" w.c.

static reading from supply duct = .3" w.c.

total external static pressure on this system = .4" w.c.

NOTE: Both readings may be taken simultaneously and read directly on the manometer if so desired. If an air conditioner coil or Electronic Air Cleaner is used in conjunction with the furnace, the readings must also include these components, as shown in the following drawing.

4. Consult proper tables for the quantity of air.

If the total external static pressure exceeds the maximum listed on the furnace rating plate, check for closed dampers, registers, undersized or poorly laid out duct work.

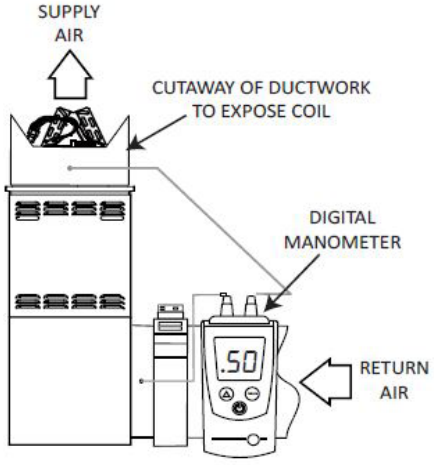

Checking Static Pressure
Figure 7

Filters - Read This Section Before Installing The Return Air Ductwork

Filters must be used with this furnace. Discuss filter maintenance with the building owner. Filters do not ship with this furnace, but must be provided by the installer. Filters must comply with UL900 or CAN/ULCS111 standards. Damage or repairs due to the installation of the furnace without filters is not covered under the warranty.

Upright Installations

Depending on the installation and/or customer preference, differing filter arrangements can be applied. Filters can be installed in the central return register or a side panel external filter rack kit (upflows), or the ductwork above a downflow furnace. As an alternative, a media air filter or electronic air cleaner can be used as the primary filter.

Horizontal Installations

Filters must be installed in either the central return register or in the return air duct work.

Circulation Air Filters

One of the most common causes of a problem in a forced air heating system is a blocked or dirty filter. Circulating air filters must be inspected monthly for dirt accumulation and replaced if necessary. Failure to maintain clean filters can cause premature heat exchanger failure.

A new home may require more frequent replacement until all construction dust and dirt is removed.

Upflow Models	Minimum Recommended Filter Size
0403A	1 - 16 X 25 Side or 1 - 14 X 24 Bottom Return
0603A	1 - 16 X 25 Side or 14 X 24 Bottom Return
0603B	1 - 16 X 25 Side or Bottom Return
0604B	1 - 16 X 25 Side or Bottom Return
0803B	1 - 16 X 25 Side or Bottom Return
0804B	1 - 16 X 25 Side or Bottom Return
0804C	1 - 16 X 25 Side or Bottom Return
0805C	1 - 16 X 25 Side or Bottom Return[1]
1005C	2 - 16 X 25 Side or 1 - 20 X 25 Bottom Return[1]
1205D	2 - 16 X 25 Side or 1 - 24 X 24 Bottom Return[1]
Downflow Models	
0403A	2 - 10 X 20 or 1 - 14 X 25 Top Return
0603A	2 - 10 X 20 or 1 - 14 X 25 Top Return
0804B	2 - 14 X 20 or 1 - 16 X 25 Top Return
0805C	2 - 14 X 20 or 1 - 20 X 25 Top Return
1005C	2 - 14 X 20 or 1 - 20 X 25 Top Return

Larger filters may be used, filters may also be centrally located
[1] = Use 2 - 16 X 25 filters and two side returns or 20 X 25 filter on bottom return if furnace is connected to a cooling unit over 4 tons nominal capacity
A combination of one side & bottom may be used instead of both sides

ELECTRICAL

24 Volt Thermostat Wiring

Important Note: Wiring routing must not interfere with circulator blower operation, filter removal or routine maintenance.

Low voltage connections can be made through either the right or left side panel. Thermostat wiring entrance holes are located in the blower compartment. The following figure shows connections for a "heat/cool system".

This furnace is equipped with a 40 VA transformer to facilitate use with most cooling equipment. Consult the wiring diagram, located on the blower compartment door, for further details of 115 Volt and 24 Volt wiring.

Thermostat Wiring Diagrams

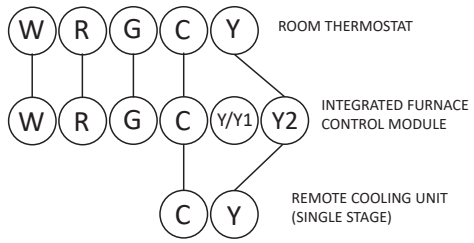

Thermostat - Single-Stage Heating with Single-Stage Cooling
Figure 8

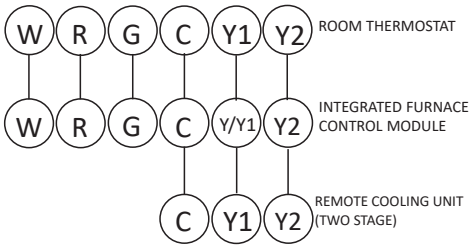

Thermostat - Single-Stage Heating with Two-Stage Cooling
Figure 9

Fossil Fuel Applications

This furnace can be used in conjunction with a heat pump in a fossil fuel application. A fossil fuel application refers to a combined gas furnace and heat pump installation which uses an outdoor temperature sensor to determine the most cost efficient means of heating (heat pump or gas furnace).

A heat pump thermostat is required to properly use a single-stage furnace in conjunction with a heat pump. Refer to the fossil fuel kit installation instructions for additional thermostat requirements.

Strictly follow the wiring guidelines in the fossil fuel kit installation instructions. All furnace connections must be made to the furnace two-stage integrated control module and the “FURNACE” terminal strip on the fossil fuel control board.

Twinning

For Furnace Twinning information, please refer to the Furnace Twinning installation manual IO-2001. Please scan the QR code below to open the document.

WARNING

ALL ACCESSORIES THAT MAY BECOME A POTENTIAL IGNITION SOURCE IF INSTALLED, SUCH AS ELECTRONIC AIR CLEANERS, MUST ONLY BE POWERED THROUGH A DAIKIN ACCESSORY CONTROL BOARD KIT. IF AN ELECTRONIC AIR CLEANER IS ALREADY INSTALLED IN THE DUCT WORK AND NOT CONNECTED TO THE ACCESSORY CONTROL BOARD, IT WILL HAVE TO BE DISABLED OR REMOVED. ENSURE THAT ANY ADDITIONAL WIRING FROM THE INDOOR UNIT TO THE ACCESSORY CONTROL BOARD IS ROUTED AND PROTECTED FROM DAMAGE AND WEAR, AVOIDING THE FLUE PIPE AND ANY JOINTS THAT MAY NEED BRAZED OR DISCONNECTED FOR SERVICE. REFER TO THE PRODUCT SPECIFICATION SHEET FOR THE ACCESSORY CONTROL BOARD KIT PART NUMBER.

115 Volt Line Connection of Accessories (Humidifier and Electronic Air Cleaner)

The furnace integrated control module is equipped with line voltage accessory terminals for controlling power to an optional field-supplied humidifier and/or electronic air cleaner.

The accessory load specifications are noted in the chart:

Humidifier	1.0 Amp maximum at 120 VAC
Electronic Air Cleaner	1.0 Amp maximum at 120 VAC

Turn OFF power to the furnace before installing any accessories. Follow the humidifier or air cleaner manufacturers’ instructions for locating, mounting, grounding, and controlling these accessories. Accessory wiring connections are to be made through the ¼” quick connect terminals provided on the furnace integrated control module. The humidifier and electronic air cleaner hot terminals are identified as HUM H and EAC H. The humidifier and electronic air cleaner neutral terminals are identified as NEUTRAL. All field wiring must conform to applicable codes. Connections should be made as shown.

If it is necessary for the installer to supply additional line voltage wiring to the inside of the furnace, the wiring must conform to all local codes, and have a minimum temperature rating of 105°C. All line voltage wire splices must be made inside the furnace junction box.

The integrated control module humidifier terminal (HUM H) is energized with 115 volts whenever the induced draft blower is energized. The integrated control module electronic air cleaner terminal (EAC H) is energized with 115 volts whenever the circulator blower is energized. This terminal can also be used to provide 115 volt power to a humidifier transformer. The remaining primary transformer wire would be connected to the Line N on the control board.

WARNING

HIGH VOLTAGE!

To avoid personal injury or death due to electrical shock, disconnect electrical power before servicing or changing any electrical wiring.

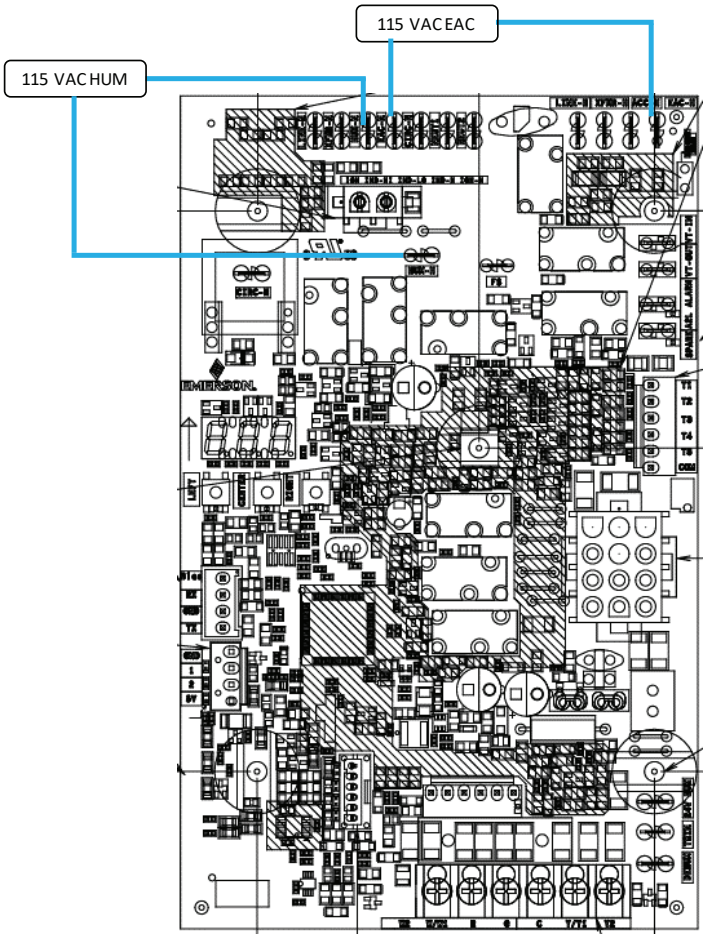

Accessories - Accessories Wiring
Figure 10

Low Voltage Humidifier

The furnace integrated control module is equipped with a low voltage terminal for providing power to an optional field-supplied 24 volt humidifier. The 24V HUM terminal is energized any time the draft inducer is powered. See connection diagram below.

NOTE: This is a 24 volt circuit only, the common connection must be on C terminal of the low voltage terminal strip (where thermostat wires are connected). Wiring for this circuit must NOT be connected to the line N location where line voltage neutral wires are connected.

Low Voltage Ventilation

The Ventilation connections provide a dry contact for field ventilator wiring connections. These connections are normally open and energize during the R-32 fault/alarm condition. VT IN and VT OUT connections are provided on the control board and are shown in the image below.

Low Voltage A2L Alarm

The A2L alarm connection provides 24VAC for field alarm wiring connections. These connections are normally open and energize during the R-32 fault/alarm condition. An A2L Alarm connection is provided on the control board and is shown in the image below.

Field Installed Accessories

Additional accessories that do not have dedicated terminals on the furnace control board may require an additional daughter board to be installed. Please refer to service manual on your product for more information.

NOTE: This furnace is equipped with a control board that is capable of monitoring for R-32 refrigerant leaks in the indoor evaporator coil. Please verify that the R-32 sensor wire is plugged in to the furnace control board before startup, if applicable. If furnace is not paired with an R-32 Refirgeration system, the default settings in the furnace control board will need to be changed. Please see the R-32 section for additional information.

Furnace Startup

1. Close the manual gas shutoff valve external to the furnace.
2. Turn off the electrical power to the furnace.
3. Set the room thermostat to the lowest possible setting.
4. Remove the burner compartment door.

NOTE: This furnace is equipped with an ignition device which automatically lights the burner. Do not try to light the burner by hand.

5. Move the furnace gas valve manual control to the OFF position.
6. Wait five minutes then smell for gas. Be sure check near the floor as some types of gas are heavier than air.
7. If you smell gas after five minutes, immediately follow the safety instructions in the *Safety Considerations* on page 2 of this manual. If you do not smell gas after five minutes, move the furnace gas valve manual control to the ON position.
8. Replace the burner compartment door.
9. Open the manual gas shutoff valve external to the furnace.
10. Turn on the electrical power to the furnace.
11. Adjust the thermostat to a setting above room temperature.
12. After the burners are lit, set the thermostat to desired temperature.

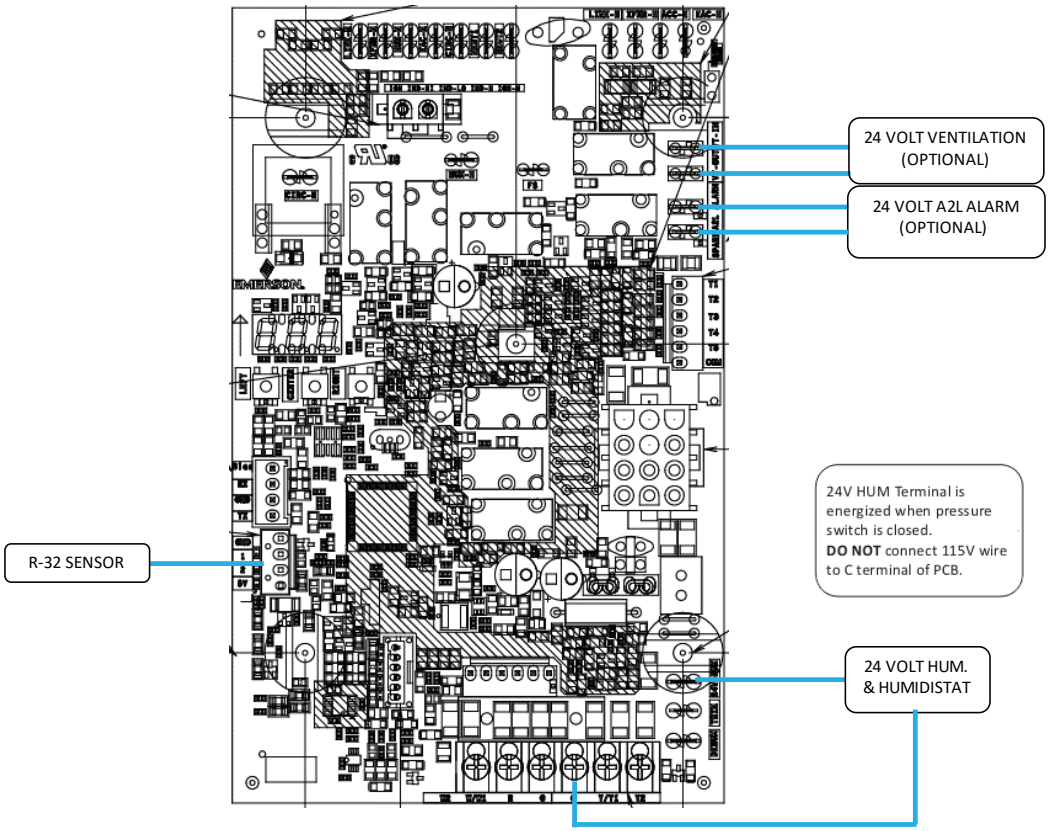

24 Volt Humidifier Connection
Figure 11

Gas Heat Sequence of Operation

Call for Heat

- On a call for heat, the thermostat contacts close & the control board receives 24 VAC on the W terminal.
- The control board microcomputer runs its self-check routine.
- The control verifies the limit switch is closed (24 VAC on Pin 8 of the 12 Pin connector).
- The control verifies that pressure switch circuit is open (0 VAC on Pin 5).
- The control module performs a gas valve circuitry check to verify gas valve relay state and presence of no voltage at the valve.
- The system will energize the Induced draft blower.
- The pre-purge period begins once the pressure switch is detected closed (24 VAC on Pin 5).
- After the completion of pre-purge, the control will energize the igniter.
- After completion of the ignitor warm-up period:
- The gas valve is energized.
- The ignitor is de-energized as soon as flame is sensed.
- After 30 seconds the indoor blower is energized on heating speed.
- When the thermostat is satisfied:
- The gas valve is de-energized.
- The inducer remains energized for the post purge period (15 seconds).
- The indoor blower runs for the selected off delay period (90 seconds by default, adjustable from 30 – 180 seconds).

Heating Mode Speed Selection

To change the main blower speed in HEATING mode, follow the following steps:

1. Press left or right button till LED displays “gA1” (for single stage HEATING). Press center button and LED will display the selected speed number as Fxx (xx: Blower speed number).
2. The control shall rotate available speed number every time Left / Right buttons are pressed. Table below shows the available speeds for Low & High heat mode.
3. When the center button is pressed, the current displayed speed shall be selected, and control shall apply the newly selected speed in next heating call.

NOTE: Always refer to the Heating Chart to choose from available heating speeds

THERMOSTAT CALL	AVAILABLE SPEEDS
W/W1	F01
	F02 (DEFAULT)
	F03
	F04

Heating Speed Table for 1 Stage IFC (Integrated Furnace Control)

Continuous Fan Mode Speed Selection

To change the main blower speed in circulation mode, follow the following steps:

1. Press the left or right button until LED displays “FSd”. Press the center button and LED will display the selected speed number as Fxx (xx: Blower speed number from 1 to 9). F01 is the default speed for circulation.
2. The control will rotate available speed number every time left/right buttons are pressed. All 9 speeds are available for circulation.
3. When the center button is pressed, the current displayed speed will be selected, and control will immediately apply that speed setting.

THERMOSTAT CALL	AVAILABLE SPEEDS
G	F01 (DEFAULT)
	F02
	F03
	F04
	F05
	F06
	F07
	F08
	F09

Circulation Speed Table

Cooling Mode Sequence of Operation

Low Stage Cooling Mode Sequence:

On a call for low stage cooling, the Y/Y1 or Y/Y1 and G thermostat contacts close signaling the furnace control board with 24 VAC on Y/Y1 or Y/Y1 and G terminals.

- The 7-Segment will display the cool mode: 1AC.
- The compressor and condenser fan are energized.
- The circulator fan is energized at low cool speed after a cool on delay. The electronic air cleaner will also be energized.
- After the thermostat is satisfied, the compressor and condenser fan are de-energized and the Cool Mode Fan Off Delay period begins.
- Following the Cool Mode Fan Off Delay period, the cool circulator and air cleaner relay are de-energized.

2nd Stage Cooling Mode Sequence:

On a call for 2nd stage cooling, the Y2 or Y2 and G thermostat contacts close signaling the furnace control board with 24 VAC on Y2 or Y2 and G terminals.

- The 7-Segment will display the cool mode: 2AC.
- The compressor and condenser fan are energized.
- The circulator fan is energized at cool speed after a cool on delay. The electronic air cleaner will also be energized.
- After the thermostat is satisfied, the compressor and condenser fan are de-energized and the Cool Mode Fan Off Delay period begins.
- Following the Cool Mode Fan Off Delay period, the cool circulator and air cleaner relay are de-energized.

Cooling Mode Speed Selection

To change the main blower speed in COOLING mode, follow the following steps:

1. Press the left or right button until LED displays “AC1” (for single stage COOLING) or “AC2” (for two-stage COOLING). Press the center button and LED will display the selected speed number as Fxx (xx: Blower speed number from 1 to 9).
2. The control will rotate available speed number every time left/right buttons are pressed. All 9 speeds are available for both Single and Two Stage cooling.
3. When the center button is pressed, the current displayed speed will be selected, and control will apply the newly selected speed in next cooling call.

THERMOSTAT CALL	AVAILABLE SPEEDS
Y/Y1	F01
	F02
	F03
	F04 (DEFAULT)
	F05
	F06
	F07
	F08
	F09

Single-Stage Cooling Speed Table for 2 Stage IFC

THERMOSTAT CALL	AVAILABLE SPEEDS
Y2	F01
	F02
	F03
	F04
	F05 (DEFAULT)
	F06
	F07
	F08
	F09

Two-Stage Cooling Speed Table for 2 Stage IFC

Furnace Shutdown

1. Set the thermostat to the lowest setting. The integrated control will close the gas valve and extinguish flame. Following a 15 second delay, the induced draft blower will be de-energized. After the blower off delay time expires, the blower de-energizes.
2. Remove the burner compartment door and move the furnace gas valve manual control to the OFF position.
3. Close the manual gas shutoff valve external to the furnace.

4. Replace the burner compartment door.

Gas Supply Pressure Measurement

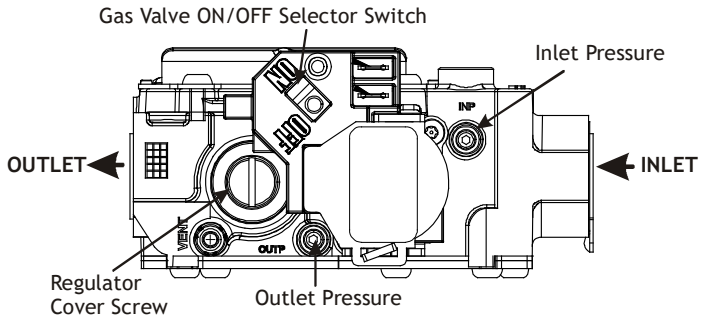

White-Rogers Model 36J22Y-204
Figure 12

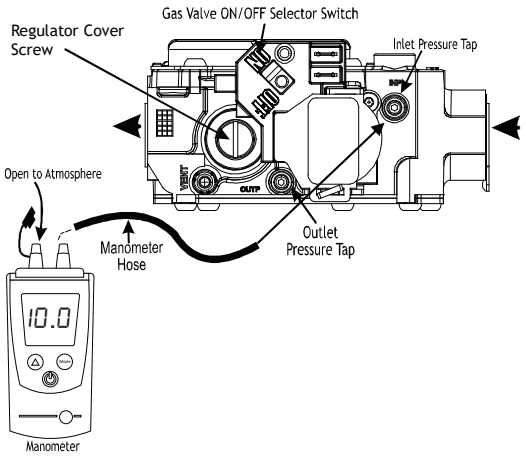

White-Rogers Model 36J22Y-204 Connected to Manometer
Figure 13

INLET GAS SUPPLY PRESSURE		
Natural Gas	Minimum: 4.5" w.c.	Maximum: 10.0" w.c.
Propane Gas	Minimum: 11.0" w.c.	Maximum: 13.0" w.c.

CAUTION

To prevent unreliable operation or equipment damage, the gas manifold pressure must be as specified on the unit rating plate with all other household gas fired appliances operating.

The line pressure supplied to the gas valve must be within the range specified below. The supply pressure can be measured at the gas valve inlet pressure tap or at a hose fitting installed in the gas piping drip leg. The supply pressure must be measured with the burners operating. To measure the gas supply pressure, use the following procedure.

1. Turn OFF gas to furnace at the manual gas shutoff valve external to the furnace.
2. Connect a calibrated manometer (or appropriate gas pressure gauge) at either the gas valve inlet pressure tap or the gas piping drip leg. See White-Rodgers 36J gas valve (Figure 13) to locate the inlet pressure tap.

NOTE: If using the inlet pressure tap on the White-Rodgers 36J gas valve, then use the 36G/J Valve Pressure Check Kit, Part No. 0151K00000S.

3. Turn ON the gas supply and operate the furnace and all other gas consuming appliances on the same gas supply line.
4. Measure furnace gas supply pressure with burners firing. Supply pressure must be within the range specified in the *Inlet Gas Supply Pressure* table.

If supply pressure differs from table, make the necessary adjustments to pressure regulator, gas piping size, etc., and/or consult with local gas utility.

5. Turn OFF gas to furnace at the manual shutoff valve and disconnect manometer. Reinstall plug before turning on gas to furnace.
6. Turn OFF any unnecessary gas appliances stated in step three.

Gas Manifold Pressure Measurement and Adjustment

Only small variations in gas pressure should be made by adjusting the gas valve pressure regulator. The manifold pressure must be measured with the burners operating. To measure and adjust the manifold pressure, use the following procedure.

1. Turn OFF gas to fur nace at the manual gas shutoff valve external to the furnace.
2. Turn off all electrical power to the system.
3. Outlet pressure tap connections:
   White-Rodgers 36J22 valve: Back outlet pressure test screw (inlet/outlet pressure tap) out one turn (counterclockwise, not more than one turn).
4. Attach a hose and manometer to the outlet pressure tap (White-Rodgers valve).
5. Turn ON the gas supply.
6. Turn on power and close thermostat “R” and “W” contacts to provide a call for heat.
7. Measure the gas manifold pressure with burners firing. Adjust manifold pressure using the *Manifold Gas Pressure* table shown on this page.

Manifold Gas Pressure		
Gas	**Range**	**Nominal**
Natural	**3.2-3.8"w.c.**	**3.5"w.c.**
Propane	**9.7-10.3"w.c.**	**10.0"w.c.**

8. Remove regulator cover screw from the outlet pressure regulator adjust tower and turn screw clockwise to increase pressure or counterclockwise to decrease pressure. Replace regulator cover screw.
9. Turn off all electrical power and gas supply to the system.
10. Remove the manometer hose from the hose barb fitting or outlet pressure tap.

11. Replace outlet pressure tap: White-Rodgers 36J22 valve: Turn outlet pressure test screw in to seal pressure port (clockwise, 7 in-lb minimum).
12. Turn on electrical power and gas supply to the system.
13. Close thermostat contacts “R” and “W” to energize the valve.

Using a leak detection solution or soap suds, check for leaks at outlet or screw (White-Rodgers valve). Bubbles forming indicate a leak. SHUT OFF GAS AND REPAIR ALL LEAKS IMMEDIATELY!

NOTE: For gas to gas conversion, consult your dealer for appropriate conversion.

R-32 INFORMATION

R-32 Function

This furnace is equipped with a control board that is capable of shutting off the gas heat and turning on the blower fan in case of an R-32 refrigerant leak in the indoor evaporator coil. If the cooling unit that is paired with this furnace does not utilize R-32 as the refrigerant, the R-32 functionalities in the furnace control board will need to be turned off for the furnace to run properly.

R-32 function on the control board is ON by default. The R-32 function can be disabled through the furnace control by entering the A2L Function Enabled menu and selecting “no”. If A2L function is disabled, the furnace control will ignore all A2L functions. If A2L function is enabled, the control will monitor the R-32 sensor information.

To enter the A2L Function Enabled menu, press the left or right button until LED displays “A2E”. Press the center button and the LED will display the selected option (yes or no). Press the left or right button to select one of the two options and press the center button to confirm the option.

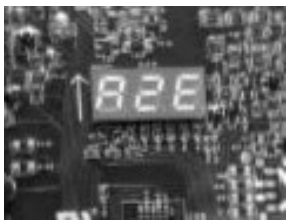

“A2E” selected
Figure 14



“Yes” selected
Figure 15



“No” selected
Figure 16

R-32 Sensor Wire Routing

Important Note: Wiring routing must not interfere with circulator blower operation, filter removal or routine maintenance. Wire should not be routed near hot surfaces and should be protected from sharp edges. Extra precaution should be taken to avoid routing near the outlet flue pipe.

The R-32 Sensor wire coming from the indoor refrigeration unit will need to be routed into the furnace and connected to the connection point on the furnace control board. This wire should be routed alongside the thermostat wires through the low voltage openings in the left or right side of the furnace blower compartment. Please see the electrical section for the location of the R-32 Sensor connection on the control board.

The R-32 function on the furnace control board may need to be enabled or disabled if any element of the installation changes from the original setup. The specific scenario will depend on each installation, so please refer to the evaporator coil’s installation manual to verify what is required for your setup. For example, if the furnace was initially installed with an evaporator coil that utilized R-410A refrigerant, and the coil is later replaced with one that uses R-32 refrigerant, then R-32 function mode on the furnace control board must be enabled, and the R-32 sensor wire must be connected to the furnace control board.

Furnace Start Up

During furnace start up, the furnace control will identify the connected R-32 sensor and will start monitoring the sensor communication. A green LED located next to the sensor connection will indicate if there is communication between the furnace control and the R-32 sensor. The LED will be ON during the duration of the startup and then will either start blinking or turn OFF. The blinking LED signifies that communication with the R-32 sensor is present. The LED OFF signifies that there is no signal with the sensor.

If there are no alarms or faults, the furnace will go into regular run mode after a warm up period. The furnace control monitors the R-32 sensor once per second.

R-32 Refrigerant Leak

If the R-32 sensor on the indoor evaporator coil detects a specified concentration of R-32 refrigerant, the furnace will enter Mitigation Mode to dilute the refrigerant concentrations in case of a leak. In Mitigation Mode, the furnace will do the following:

1. Display the A2L Refrigerant Leakage error code (EAL)
2. Shut down the gas operation
3. Energize the optional ventilation and alarm outputs.
4. Run the fan at max CFM airflow

Once the R-32 sensor stops detecting a leak, the fan will continue to run for 5 minutes. After the 5 minutes, if there are no other alarms or faults, the control will de-energize the optional ventilation and alarm outputs and then go back to the original operating mode per the thermostat.

A2L Verification

The A2L Function Verification menu allows the installer to verify if the R-32 function operates properly. This menu simulates the refrigerant leak process and is only able to be used when there are no active alarms or faults. To verify the R-32 functions, enter the A2L Function Verification menu and select “YES”. To enter the A2L Function Verification menu, press the left or right button until LED displays “A2u”. Press the center button and the LED will display the selected option (yes or no). Press the left or right button to select one of the two options and press the center button to confirm the option. Once “YES” is selected, the furnace will do the following:

1. Display the A2L Refrigerant Leakage code (EAL)
2. Shut down the gas operation
3. Energize the optional ventilation and alarm outputs.
4. Run the fan at max CFM airflow

The control will exit the verification function if:

1. The 5 minute timeout expires or
2. An alarm or fault is detected or
3. The user turns OFF the A2L Function Verification.

NOTE: To verify gas heating operation shuts down, give furnace a call for heat before entering into A2L Function Verification.

MAINTENANCE

WARNING

To avoid electric shock, injury or death, disconnect electrical power before performing any maintenance. If you must handle the igniter, handle with care. Touching the igniter element with bare fingers, rough handling or vibration could damage the igniter resulting in premature failure. Only a qualified servicer should ever handle the igniter.



Annual Inspection

The furnace should be inspected by a qualified installer, or service agency at least once per year. This check should be performed at the beginning of the heating season. This will ensure that all furnace components are in proper working order and that the heating system functions appropriately. Pay particular attention to the following items. Repair or service as necessary.

- Flue pipe system. Check for blockage and/or leakage. Check the outside termination and the connections at and internal to the furnace.
- Heat exchanger. Check for corrosion and/or buildup within the heat exchanger passageways.
- Burners. Check for proper ignition, burner flame, and flame signal.
- Wiring. Check electrical connections for tightness and/or corrosion. Check wires for damage.
- Filters.
- R-32 Sensor Wire. Check R-32 sensor wire connection for tightness and check wire for damage.

Filters

CAUTION

To ensure proper unit performance, adhere to the filter sizes given in the recommended Minimum Filter Size Table or Specification Sheet applicable to your model.

Filter Maintenance

Improper filter maintenance is the most common cause of inadequate heating or cooling performance. Filters should be cleaned (permanent) or replaced (disposable) as required.

Filter Removal

Depending on the installation, differing filter arrangements can be applied. Filters can be installed in either the central return register or a side panel external filter rack (upflow only). A media air filter or electronic air cleaner can be used as an alternate filter. Follow the filter sizes given in the Recommended Minimum Filter size table to ensure proper unit performance.

To remove filters from an external filter rack in an upright upflow installation, follow the directions provided with external filter rack kit.

Horizontal Unit Filter Removal

Filters in horizontal installations are located in the central return register or the ductwork near the furnace.

To remove:

1. Turn OFF electrical power to furnace.
2. Remove filter(s) from the central return register or ductwork.
3. Replace filter(s) by reversing the procedure for removal.
4. Turn ON electrical power to furnace.

MEDIA AIR FILTER OR ELECTRONIC AIR CLEANER REMOVAL

Follow the manufacturer's directions for service.

Burners

Visually inspect the burner flames periodically during the heating season. Turn on the furnace at the thermostat and allow several minutes for flames to stabilize, since any dislodged dust will alter the flames normal appearance. Flames should be stable, quiet, soft, and blue (dust may cause orange tips but they must not be yellow). They should extend directly outward from the burners without curling, floating, or lifting off. Flames must not impinge on the sides of the heat exchanger firing tubes.

Induced Draft and Circulator Blowers

The bearings in the induced draft blower and circulator blower motors are permanently lubricated by the manufacturer. No further lubrication is required. Check motor windings for accumulation of dust which may cause overheating. Clean as necessary.

Flame Sensor (Qualified Servicer Only)

Under some conditions, the fuel or air supply can create a nearly invisible coating on the flame sensor. This coating acts as an insulator causing a drop in the flame sense signal. If the flame sense signal drops too low the furnace will not sense flame and will lock out. The flame sensor should be carefully cleaned by a qualified servicer using steel wool. Following cleaning, the flame sense signal should be as indicated in the Specifications Sheet.

Flue Passages (Qualified Servicer Only)

The heat exchanger flue passageways should be inspected at the beginning of each heating season.

BEFORE LEAVING AN INSTALLATION

- Cycle the heating, cooling and fan only operations to verify each operation is working properly.
- Review the Owner's Manual with the homeowner and discuss proper furnace operation and maintenance.
- Leave literature packet near furnace.

REPAIR AND REPLACEMENT PARTS

- When ordering any of the listed functional parts, be sure to provide the furnace model, manufacturing, and serial numbers with the order.
- Although only functional parts are shown in the parts list, all sheet metal parts, doors, etc. may be ordered by description.
- Parts are available from your distributor.

Functional Parts List

Gas Valve
Gas Manifold
Natural Gas Orifice
Propane Gas Orifice
Igniter
Flame Sensor
Rollout Limit Switch
Primary Limit Switch
Pressure Switch
Induced Draft Blower
Blower Motor
Blower Wheel
Blower Mounting Bracket
Blower Cutoff
Blower Housing
Inductor
Heat Exchanger
Door Switch
Integrated Control Module
Transformer

FAN & COOLING AIFLOW													
MODEL	THERMOSTAT CALL	TAP #	EXTERNAL STATIC PRESSURE (INCHES WATER COLUMN)										
			0.1	0.2	0.3	0.4	0.5		0.6		0.7		0.8	
			CFM	CFM	CFM	CFM	CFM	Watts	CFM	Watts	CFM	Watts	CFM	Watts
R9S800403A	Y/Y1, Y2, G	F01	658	585	545	495	444	83	390	88	332	94	151	49
		F02	749	697	652	607	554	102	509	108	459	113	406	120
		F03	925	881	840	800	760	150	721	157	681	162	645	169
		F04^	882	841	800	760	719	138	678	144	641	151	602	157
		F05	1330	1295	1273	1251	1223	358	1195	366	1168	375	1142	385
		F06	1130	1090	1059	1022	991	230	957	237	926	246	895	255
		F07	1158	1113	1090	1057	1024	247	996	258	964	264	935	271
		F08	1270	1235	1208	1179	1147	304	1119	312	1088	322	1060	329
		F09	1417	1380	1359	1336	1314	408	1288	419	1261	430	1238	440
R9S800603A	Y/Y1, Y2, G	F01	659	599	542	490	437	89	383	95	320	102	N/A	N/A
		F02	1268	1221	1188	1154	1122	336	1091	344	1060	353	1029	361
		F03	1087	1044	1008	973	938	234	905	242	871	249	841	257
		F04^	1118	1070	1033	997	963	243	929	251	896	260	865	267
		F05	1308	1262	1224	1197	1167	332	1141	341	1117	352	1089	361
		F06	868	823	780	741	699	148	662	154	624	160	584	167
		F07	922	877	835	795	757	165	718	173	679	180	642	187
		F08	1382	1341	1311	1291	1263	435	1234	443	1206	453	1177	464
		F09	1492	1448	1409	1381	1354	460	1332	470	1310	481	1288	491
R9S800603B	Y/Y1, Y2, G	F01	720	660	614	542	468	81	413	87	359	94	313	99
		F02	1289	1260	1232	1194	1161	257	1125	266	1087	275	1073	286
		F03	1125	1089	1052	1013	973	184	947	196	909	202	863	213
		F04^	1252	1198	1153	1110	1069	230	1028	239	990	247	953	256
		F05	922	872	830	786	736	122	683	130	616	139	565	146
		F06	1146	1113	1076	1039	1002	192	969	204	933	212	891	222
		F07	1370	1345	1317	1286	1260	299	1224	313	1187	320	1168	333
		F08	1413	1386	1360	1330	1302	317	1270	333	1242	345	1211	354
		F09	1544	1500	1459	1419	1387	379	1349	390	1317	402	1286	405
R9S800604B	Y/Y1, Y2, G	F01	764	695	630	559	485	95	415	102	358	109	N/A	N/A
		F02	1287	1235	1191	1147	1104	244	1062	252	1020	263	979	272
		F03	1339	1301	1258	1217	1174	270	1131	279	1090	289	1048	299
		F04^	1396	1346	1298	1257	1217	289	1175	299	1135	308	1098	319
		F05	1185	1135	1088	1040	992	203	947	211	901	219	855	227
		F06	1500	1460	1420	1360	1380	337	1294	353	1256	365	1219	380
		F07	1591	1539	1493	1454	1416	391	1379	402	1347	412	1311	424
		F08	1675	1622	1583	1545	1510	447	1474	459	1440	473	1402	482
		F09	1790	1741	1701	1668	1631	531	1599	546	1567	560	1532	570
R9S800803B	Y/Y1, Y2, G	F01	710	646	580	515	432	79	367	85	314	90	274	95
		F02	1298	1255	1216	1178	1140	242	1102	253	1067	263	1028	273
		F03	1209	1166	1124	1083	1045	208	1005	217	964	227	923	236
		F04^	1138	1091	1045	1001	959	181	920	188	876	197	832	208
		F05	1391	1352	1314	1278	1241	288	1209	298	1175	311	1140	242
		F06	977	931	880	836	785	135	734	142	683	151	626	158
		F07	1036	985	940	895	848	150	799	158	751	167	705	175
		F08	1456	1414	1376	1341	1302	315	1270	327	1238	337	1200	352
		F09	1533	1488	1452	1415	1383	360	1350	370	1317	381	1286	393
R9S800804B	Y/Y1, Y2, G	F01	841	657	595	522	439	90	367	97	315	102	N/A	N/A
		F02	1141	1089	1045	1001	958	192	914	200	869	207	823	214
		F03	1311	1267	1226	1189	1150	253	1114	264	1072	275	1034	283
		F04^	1395	1347	1309	1270	1233	291	1199	302	1164	312	1125	323
		F05	1490	1447	1407	1373	1336	339	1303	351	1269	360	1237	373
		F06	1553	1510	1469	1435	1401	372	1368	384	1335	395	1300	408
		F07	1593	1548	1508	1474	1440	392	1409	405	1376	415	1343	429
		F08	1776	1735	1695	1661	1628	514	1601	529	1570	542	1542	555
		F09	1853	1812	1773	1739	1708	569	1679	585	1650	599	1623	614

FAN & COOLING AIFLOW

MODEL	THERMOSTAT CALL	TAP #	EXTERNAL STATIC PRESSURE (INCHES WATER COLUMN)											
			0.1	0.2	0.3	0.4	0.5		0.6		0.7		0.8	
			CFM	CFM	CFM	CFM	CFM	Watts	CFM	Watts	CFM	Watts	CFM	Watts
R9S800804C	Y/Y1, Y2, G	F01	831	750	671	588	501	98	405	106	348	112	300	117
		F02	1214	1158	1103	1045	989	184	936	194	883	205	823	215
		F03	1303	1249	1191	1136	1081	212	1028	223	974	234	928	248
		F04^	1426	1375	1324	1277	1229	259	1177	270	1124	283	1078	295
		F05	1518	1465	1418	1372	1328	293	1284	305	1237	318	1195	330
		F06	1588	1539	1494	1447	1401	330	1358	349	1313	360	1267	373
		F07	1710	1666	1632	1595	1554	397	1512	412	1473	427	1431	440
		F08	1785	1751	1717	1675	1639	446	1596	453	1557	472	1516	483
		F09	1845	1805	1771	1733	1695	476	1655	488	1618	507	1576	521
R9S800805C	Y/Y1, Y2, G	F01	837	752	671	576	501	100	426	107	361	113	315	119
		F02	1316	1270	1218	1166	1114	217	1061	227	1000	238	962	251
		F03	1353	1323	1286	1235	1183	242	1131	253	1085	263	1040	275
		F04^	1587	1544	1506	1459	1416	333	1372	345	1323	358	1281	369
		F05	1731	1673	1632	1587	1546	398	1506	414	1463	426	1421	440
		F06	1794	1744	1709	1671	1632	444	1591	459	1555	474	1513	489
		F07	1861	1805	1761	1720	1681	481	1642	496	1603	509	1565	524
		F08	1910	1873	1839	1798	1761	525	1723	545	1686	559	1648	574
		F09	2110	2055	2035	2003	1973	700	1946	724	1907	731	1890	750
R9S801005C	Y/Y1, Y2, G	F01	802	724	637	551	468	87	389	95	342	100	294	106
		F02	1405	1356	1308	1262	1210	241	1182	#N/A	1155	252	1102	264
		F03	1574	1531	1484	1440	1392	320	1357	331	1306	342	1256	355
		F04^	1619	1575	1526	1489	1446	336	1404	352	1355	361	1313	374
		F05	1688	1641	1600	1557	1513	367	1477	383	1428	398	1381	405
		F06	1811	1769	1730	1686	1649	443	1610	456	1572	468	1525	482
		F07	1857	1812	1774	1733	1697	475	1662	489	1622	505	1586	518
		F08	1892	1850	1805	1774	1735	496	1692	511	1658	523	1621	537
		F09	2116	2073	2039	2005	1981	675	1945	688	1909	707	1879	728
R9S801205D	Y/Y1, Y2, G	F01	851	774	692	615	535	105	470	111	411	118	359	124
		F02	1677	1629	1583	1540	1498	408	1449	422	1399	436	1349	450
		F03	1537	1489	1444	1404	1365	335	1322	348	1272	360	1211	372
		F04^	1416	1365	1315	1267	1220	277	1163	285	1106	296	1048	306
		F05	1154	1098	1043	983	932	177	874	187	819	196	755	205
		F06	1806	1764	1729	1688	1654	489	1615	503	1578	519	1535	535
		F07	1869	1816	1773	1731	1693	521	1661	535	1629	548	1589	560
		F08	1947	1903	1865	1833	1802	604	1769	621	1743	640	1708	654
		F09	2107	2066	2030	1996	1963	734	1932	753	1899	772	1867	788

RECOMMENDED AIRFLOW SPEEDS FOR CONNECTION WITH 2 STAGE OUTDOOR MODELS		
FURNACE MODEL	Y2	Y1
R9S800805C	F08	F02
R9S801205D	F06	F05

NOTE:

1. F04 is Default Speed for Y/Y1
2. F05 is Default Speed for Y2
3. F01 is Default Speed for G
4. For a single-stage outdoor unit, the Y connection from the thermostat can be connected to the Y/Y1 or Y2 connection on the furnace control module. A call for cooling will energize that connection on the furnace control module. The desired cooling fan speed should be adjusted for the furnace control module connection used (Y1 or Y2) to provide the correct cooling airflow.

AIRFLOW TABLES

*R9S80

HEATING AIFLOW															
MODEL	T.STAT CALL	TAP #	EXTERNAL STATIC PRESSURE, (INCHES WATER COLUMN)												TEMP RANGE
			0.1		0.2		0.3		0.4		0.5		0.6	0.7	0.8	
			CFM	RISE	CFM	RISE	CFM	RISE	CFM	RISE	CFM	RISE	CFM	CFM	CFM	
R9S800403A	W/W1	F01^^	658	N/A	585	N/A	545	N/A	495	N/A	444	N/A	390	332	151	25-55
		F02^	749	40	697	42	652	45	607	49	554	53	509	459	406	
		F03	925	32	881	34	840	35	800	37	760	39	721	681	645	
		F04	882	34	841	35	800	37	760	39	719	41	678	641	602	
R9S800603A	W/W1	F01^^	659	N/A	599	N/A	542	N/A	490	N/A	437	N/A	383	320	N/A	20-50
		F02^	1268	35	1221	36	1188	37	1154	38	1122	40	1091	1060	1029	
		F03	1087	41	1044	43	1008	44	973	46	938	47	905	871	841	
		F04	1118	40	1070	42	1033	43	997	45	963	46	929	896	865	
R9S800603B	W/W1	F01^^	720	N/A	660	N/A	614	N/A	542	N/A	468	N/A	413	359	313	20-50
		F02^	1289	34	1260	35	1232	36	1194	37	1161	38	1125	1087	1073	
		F03	1125	40	1089	41	1052	42	1013	44	973	46	947	909	863	
		F04	1252	36	1198	37	1153	39	1110	40	1069	42	1028	990	953	
R9S800604B	W/W1	F01^^	764	N/A	695	N/A	630	N/A	559	N/A	485	N/A	415	358	N/A	20-50
		F02^	1287	35	1235	36	1191	37	1147	39	1104	40	1062	1020	979	
		F03	1339	33	1301	34	1258	35	1217	37	1174	38	1131	1090	1048	
		F04	1396	32	1346	33	1298	34	1257	35	1217	37	1175	1135	1098	
R9S800803B	W/W1	F01^^	710	N/A	646	N/A	580	N/A	515	N/A	432	N/A	367	314	274	35-65
		F02^	1298	46	1255	47	1216	49	1178	50	1140	52	1102	1067	1028	
		F03	1209	49	1166	51	1124	53	1083	55	1045	57	1005	964	923	
		F04	1138	52	1091	54	1045	57	1001	59	959	62	920	876	832	
R9S800804B	W/W1	F01^^	841	N/A	657	N/A	595	N/A	522	N/A	439	N/A	367	315	N/A	35-65
		F02^	1141	52	1089	54	1045	57	1001	59	958	62	914	869	823	
		F03	1311	45	1267	47	1226	48	1189	50	1150	52	1114	1072	1034	
		F04	1395	42	1347	44	1309	45	1270	47	1233	48	1199	1164	1125	
R9S800804C	W/W1	F01^^	831	N/A	750	N/A	671	N/A	588	N/A	501	N/A	405	348	300	35-65
		F02^	1214	49	1158	51	1103	54	1045	57	989	60	936	883	823	
		F03	1303	45	1249	47	1191	50	1136	52	1081	55	1028	974	928	
		F04	1426	42	1375	43	1324	45	1277	46	1229	48	1177	1124	1078	
R9S800805C	W/W1	F01^^	837	N/A	752	N/A	671	N/A	576	N/A	501	N/A	426	361	315	35-65
		F02^	1316	45	1270	47	1218	49	1166	51	1114	53	1061	1000	962	
		F03	1353	44	1323	45	1286	46	1235	48	1183	50	1131	1085	1040	
		F04	1587	37	1544	38	1506	39	1459	41	1416	42	1372	1323	1281	
R9S801005C	W/W1	F01^^	802	N/A	724	N/A	637	N/A	551	N/A	468	N/A	389	342	294	35-65
		F02^	1405	53	1356	55	1308	57	1262	59	1210	61	1155	1102	1057	
		F03	1574	47	1531	48	1484	50	1440	51	1392	53	1357	1306	1256	
		F04	1619	46	1575	47	1526	49	1489	50	1446	51	1404	1355	1313	
R9S801205D	W/W1	F01^^	851	N/A	774	N/A	692	N/A	615	N/A	535	N/A	470	411	359	40-70
		F02^	1677	53	1629	55	1583	56	1540	58	1498	59	1449	1399	1349	
		F03	1537	58	1489	60	1444	62	1404	63	1365	65	1322	1272	1211	
		F04^^	1416	N/A	1365	N/A	1315	N/A	1267	N/A	1220	N/A	1163	1106	1048	

NOTE:

^DEFAULT & RECOMMENDED

^^NOT RECOMMENDED FOR HEATING

AIRFLOW TABLES

*D9S80

FAN & COOLING AIFLOW													
MODEL	THERMOSTAT CALL	TAP #	EXTERNAL STATIC PRESSURE (INCHES WATER COLUMN)										
			0.1	0.2	0.3	0.4	0.5		0.6		0.7		0.8	
			CFM	CFM	CFM	CFM	CFM	Watts	CFM	Watts	CFM	Watts	CFM	Watts
D9S800403A	Y/Y1, Y2, G	F01	712	663	610	559	514	86	462	94	395	102	337	108
		F02	1120	1081	1053	1022	990	216	955	225	918	231	887	240
		F03	929	891	858	815	772	142	737	150	699	157	664	165
		F04^	1073	1031	1003	969	922	191	891	200	854	207	822	217
		F05	1212	1198	1161	1138	1103	262	1076	268	1037	280	1007	288
		F06	871	830	789	743	702	123	665	131	628	139	583	146
		F07	825	784	741	694	650	114	609	120	563	126	520	133
		F08	1274	1252	1220	1195	1169	298	1145	307	1110	315	1084	324
		F09	1362	1342	1307	1273	1252	353	1237	364	1211	378	1185	385
D9S800603A	Y/Y1, Y2, G	F01	706	655	604	555	505	87	455	92	395	98	328	105
		F02	1035	991	951	913	876	182	844	189	807	197	770	203
		F03	932	887	844	806	767	145	728	152	689	158	651	164
		F04^	897	851	808	764	725	134	686	140	646	146	603	151
		F05	1123	1077	1041	1006	973	218	941	227	907	235	875	242
		F06	1155	1113	1074	1039	1006	233	974	241	945	251	913	258
		F07	1255	1214	1181	1147	1116	286	1087	296	1056	304	1028	313
		F08	1388	1331	1298	1266	1235	355	1207	367	1179	375	1151	387
		F09	1421	1380	1348	1318	1289	390	1262	401	1233	411	1207	421
D9S800804B	Y/Y1, Y2, G	F01	760	697	636	569	481	86	402	92	349	98	300	103
		F02	1286	1238	1196	1157	1117	232	1077	240	1036	250	998	259
		F03	1393	1348	1308	1270	1230	277	1196	289	1158	295	1123	306
		F04^	1459	1414	1371	1336	1297	310	1264	321	1229	333	1193	342
		F05	1753	1713	1677	1642	1611	493	1576	508	1549	524	1518	533
		F06	1309	1261	1218	1182	1142	239	1103	248	1064	258	1025	268
		F07	1580	1534	1495	1459	1429	376	1390	388	1356	394	1324	409
		F08	1523	1483	1438	1403	1370	351	1336	355	1299	366	1266	377
		F09	1643	1599	1562	1525	1491	418	1462	430	1431	444	1394	450
D9S800805C	Y/Y1, Y2, G	F01	1022	813	674	585	511	101	431	109	334	119	282	124
		F02	1453	1407	1332	1259	1190	244	1143	261	1064	273	1003	287
		F03	1176	1105	1020	935	864	163	797	173	729	183	673	194
		F04^	1710	1660	1613	1560	1505	344	1424	359	1353	375	1296	392
		F05	1843	1786	1747	1690	1643	420	1575	435	1497	445	1435	459
		F06	1859	1819	1779	1734	1691	432	1641	450	1593	465	1520	481
		F07	2028	1982	1946	1907	1861	536	1814	555	1749	564	1683	588
		F08	2096	2045	2006	1974	1927	585	1882	599	1818	611	1765	629
		F09	2203	2170	2138	2113	2074	689	2032	705	1990	723	1948	737
D9S801005C	Y/Y1, Y2, G	F01	956	777	675	587	468	100	377	107	324	112	296	117
		F02	1460	1404	1350	1299	1251	252	1203	264	1150	276	1098	287
		F03	1561	1499	1441	1385	1336	290	1289	302	1243	314	1197	325
		F04^	1628	1571	1521	1472	1425	317	1380	331	1337	343	1291	356
		F05	1714	1659	1611	1564	1519	360	1473	371	1432	387	1387	397
		F06	1833	1784	1735	1688	1645	420	1605	436	1562	450	1520	462
		F07	1899	1853	1804	1761	1720	465	1681	479	1640	494	1602	510
		F08	1926	1894	1849	1807	1764	487	1720	497	1683	514	1642	527
		F09	2222	2174	2132	2090	2053	688	2013	702	1976	719	1944	737

RECOMMENDED AIRFLOW SPEEDS FOR CONNECTION WITH 2 STAGE OUTDOOR MODELS		
FURNGCE MODEL	Y2	Y1
D9S800805C	F08	F02

NOTE:

1. F04 is Default Speed for Y/Y1
2. F05 is Default Speed for Y2
3. F01 is Default Speed for G
4. For a single-stage outdoor unit, the Y connection from the thermostat can be connected to the Y/Y1 or Y2 connection on the furnGCe control module. A call for cooling will energize that connection on the furnGCe control module. The desired cooling fan speed should be adjusted for the furnGCe control module connection used (Y1 or Y2) to provide the correct cooling airflow.

AIRFLOW TABLES

*D9S80

HEATING AIFLOW															
MODEL	T.STAT CALL	TAP #	EXTERNAL STATIC PRESSURE, (INCHES WATER COLUMN)												TEMP RANGE
			0.1		0.2		0.3		0.4		0.5		0.6	0.7	0.8	
			CFM	RISE	CFM	RISE	CFM	RISE	CFM	RISE	CFM	RISE	CFM	CFM	CFM	
D9S800403A	W/W1	F01^^	712	N/A	663	N/A	610	N/A	559	N/A	514	N/A	462	395	337	25-55
		F02^	1120	26	1081	27	1053	28	1022	29	990	30	955	918	887	
		F03	929	32	891	33	858	35	815	36	772	38	737	699	664	
		F04	1073	28	1031	29	1003	30	969	31	922	32	891	854	822	
D9S800603A	W/W1	F01^^	706	N/A	655	N/A	604	N/A	555	N/A	505	N/A	455	395	328	30-60
		F02^	1035	43	991	45	951	47	913	49	876	51	844	807	770	
		F03	932	48	887	50	844	53	806	55	767	58	728	689	651	
		F04^^	897	N/A	851	N/A	808	N/A	764	N/A	725	N/A	686	646	603	
D9S800804B	W/W1	F01^^	760	N/A	697	N/A	636	N/A	569	N/A	481	N/A	402	349	300	35-65
		F02^	1286	46	1238	48	1196	50	1157	51	1117	53	1077	1036	998	
		F03	1393	43	1348	44	1308	45	1270	47	1230	48	1196	1158	1123	
		F04	1459	41	1414	42	1371	43	1336	44	1297	46	1264	1229	1193	
D9S800805C	W/W1	F01^^	1022	N/A	813	N/A	674	N/A	585	N/A	511	N/A	431	334	282	35-65
		F02^	1453	41	1407	42	1332	45	1259	47	1190	50	1143	1064	1003	
		F03^^	1176	N/A	1105	N/A	1020	N/A	935	N/A	864	N/A	797	729	673	
		F04	1710	35	1660	36	1613	37	1560	38	1505	39	1424	1353	1296	
D9S801005C	W/W1	F01^^	956	N/A	777	N/A	675	N/A	587	N/A	468	N/A	377	324	296	40-70
		F02^	1460	51	1404	53	1350	55	1299	57	1251	59	1203	1150	1098	
		F03	1561	47	1499	49	1441	51	1385	53	1336	55	1289	1243	1197	
		F04	1628	46	1571	47	1521	49	1472	50	1425	52	1380	1337	1291	

NOTE:

^DEFAULT & RECOMMENDED

^^NOT RECOMMENDED FOR HEATING

1 STAGE STATUS CODES

Menu Description	LED Display		Notes
	Main Menu	Option Menu	
Active Alarm menu	Er r	Exx	(xx: code numbers)
Last 10 Faults	F10	Exx	(xx: code numbers)
Code Release Number	Cr	CR Number	
Reset to Factory Default	r Fd	yes, no	
Blower Speed for Continous Fan Mode	FSd	Fxx	(xx: Blower Speed Number F01, F02..)
Blower Speed for 1st Stage Compressor Mode	AC1	Fxx	(xx: Blower Speed Number F01, F02..)
Blower Speed for 2nd Stage Compressor Mode	AC2	Fxx	(xx: Blower Speed Number F01, F02..)
Cool On Delay	Cnd	Delay, Seconds	Default set at 7 Secs, Adjustments can be made in 7 Secs increments from 0 to 35 Secs
Cool Off Delay	Cf d	Delay, Seconds	Default set at 65 Secs, Adjustments can be made in 5 Secs increments from 0 to 120 Secs
Blower Speed for Gas Heat Mode	gAF	Fxx	(xx: Blower Speed Number F01, F02..)
Gas Heat On Delay	gnd	Delay, Seconds	Default set at 30 Secs, Adjustments can be made in 5 Secs increments from 5 to 30 Secs
Gas heat Off Delay	gFd	Delay, Seconds	Default set at 90 Secs, Adjustments can be made in 30 Secs increments from 30 to 180 Secs
Automatic Heat Staging - For Two Stage Control	AHS	no, 10, 20, 30, 60, AUt	Refer to Section " CHANGING HEATING MODE SETTING"
A2L Function Verification	A2u	yes, no	Refer to the R-32 Information Section
A2L Function Enabled	A2E	yes, no	Refer to the R-32 Information Section

Mode	Main Menu
Idle	I dL
Continous Fan	FAn
Compressor Cooling, Low Stage	1AC
Compressor Cooling, High Stage	2AC
Gas heat - Single Stage Control	gH
OEM test Mode	EOL

1 STAGE TROUBLESHOOTING CODES

Symptom	LED Status	Fault Description	Possible Causes	Corrective Action(s)	Notes & Cautions
Normal operation.	IdL	Idle	• Normal operation.	• None	• Normal operation.
Furnace fails to operate. Integrated control module LED display provides no signal.	nonE	No 115v power to furnace or no 24 volt power to integrated control module. Blown fuse or tripped circuit breaker. Integrated control module is non-functional.	• Manual disconnect switch turned OFF, door switch open or 24 volt wire improperly connected or loose. • Furnace electrical supply shared with other devices. • Integrated control module is non-functional.	• Check 115 volt power to furnace and integrated control module. • Check for possible shorts in 115 volt circuit. Repair as necessary. • Replace non-functional integrated control module.	• Turn power OFF prior to repair. • Read precautions in ""Electrostatic Discharge"" section of manual. • Replace control with correct replacement part.
Furnace fails to operate and goes into a hard lockout.	EbL	Circulator blower motor current after heat ON delay is lower than expected value.	• Loose wiring connections to and from the blower motor. • Circulator blower motor 115 volt L1 wire is not plugged into the CIRC-H connection on the integrated control board. • Circulator blower motor failure.	• Check for loose wiring connections to and from the circulator blower motor. • Check 115 volt L1 wire from blower motor is plugged into the CIRC-H connection on the integrated control board. • Check circulator blower motor operation. Replace blower motor if necessary.	• Turn power OFF prior to repair. • Replace blower motor with correct replacement part.
Furnace fails to operate and goes into a hard lockout.	EbU	Circulator blower motor current during inducer pre-purge is higher than expected value.	• Circulator blower motor power wiring reversed on integrated control board.	• Check for loose wiring connections to and from the circulator blower motor. • Check for miswired connections on the integrated control board.	• Turn power OFF prior to repair.
Furnace fails to operate.	Ed8	Invalid Call (check ODS setting)	• ODS setting does not match outdoor unit.	• Setup ODS to match outdoor unit. • Setup TON airflow to match outdoor unit.	• Set system to IdL before setting ODS and TON
Furnace fails to operate.	EE0	Furnace lockout due to excessive number of ignition ""retries"" (3 total). Failure to establish flame. Loss of flame after establishment.	• Failure to establish flame. Cause may be no gas to burners, bad igniter or igniter alignment, improper orifices, or coated/oxidized or improperly connected flame sensor. • Loss of flame after establshment. Cause may be interrupted gas supply, lazy burner flames (improper gas pressure or restriction in flue and/or lack of combustion air), or improper induced draft blower performance.	• Locate and correct gas interruption. • Replace or realign igniter. • Check flame sense signal. Clean sensor if coated and/or oxidized. • Check flue piping for blockage, proper length, elbows and termination. • Verify proper induced draft blower performance.	• Turn power OFF prior to repair. • Igniter is fragile, handle with care. • Clean flame sensor with steel wool. • See ""Vent/Flue Pipe"" section for piping details.
Furnace fails to operate.	EE1	Pressure switch circuit closed at start of heating cycle.	• Pressure switch contacts sticking. • Short in pressure switch circuit wiring.	• Replace pressure switch. • Repair short in wiring.	• Turn power OFF prior to repair. • Replace pressure switch with proper replacement part.

To View & Clear Fault Codes

- Press either the Left or Right button until F10 is displayed.
- Press the center button to view stored faults.
- Press and hold the center button for 5 to 30 seconds.
- All stored faults will be erased, and the display will flash - - - three times and return to F 10.

1 STAGE TROUBLESHOOTING CODES

Symptom	LED Status	Fault Description	Possible Causes	Corrective Action(s)	Notes & Cautions
Induced draft blower runs continuously with no further furnace operation.	EE2	Pressure switch circuit open.	• Pressure switch hose blocked, pinched, or connected improperly. • Blocked flue pipe, or weak induced draft blower. • Incorrect pressure switch set point or malfunctioning switch contacts. • Loose or improperly connected wiring.	• Inspect pressure switch hose. Repair/ replace if necessary. • Inspect flue piping for blockage, proper length, elbows and termination. Correct as necessary. • Check induced draft blower performance. Correct as necessary. • Check pressure switch operation. Replace as needed. • Tighten or correct wiring connections.	• Turn power OFF prior to repair. • Replace pressure switch with proper replacement part. • Replace induced draft blower with proper replacement part.
Circulator blower runs continuously with no furnace operation.	EE3	Primary limit circuit open.	• Insufficient conditioned air over the heat exchanger. • Blocked filters, restrictive ductwork. • Inproper circulator blower speed or failed circulator blower motor. • Loose or improperly connected wiring in high limit circuit.	• Check filters and ductwork for blockage. Clean filters or remove obstruction. • Check circulator blower speed and performance. Correct speed or replace blower motor if necessary. • Tighten or correct wiring connections.	• Turn power OFF prior to repair. • See Specification Sheet applicable for your model for allowable temp rise range and proper circulator speed.
Induced draft blower and circulator blower run continuously with no furnace operation.	EE4	Flame sensed with no call for heat.	• Short to ground in flame sense circuit. • Lingering burner flame. • Slow closing gas valve.	• Correct short at flame sensor or in flame sensor wiring. • Check for lingering flame. • Verify proper operation of gas valve.	• Turn power OFF prior to repair.
No furnace operation.	EE5	Open fuse.	• Short in low voltage wiring • Back of control board is touching mounting panel because standoffs are missing.	• Locate and correct short in low voltage wiring. • Replace the missing standoffs.	• Turn power OFF prior to repair. • Replace fuse with 3-amp automotive type.
Normal furnace operation with weak flame signal.	EE6	Flame sense micro amp signal is low.	• Flame sensor is coated/oxidized. • Flame sensor incorrectly positioned in burner flame. • Lazy burner flame due to improper gas pressure or combution air.	• Clean flame sensor if coated or oxidized. • Inspect flame sensor for proper alignment. • Compare current gas pressure to rating plate and adjust as needed.	• Turn power OFF prior to repair. • Clean flame sensor with steel wool. • See ""Vent/Flue Pipe"" section for piping details. • See rating plate for proper gas pressure.
Furnace fails to operate.	E10	Grounding fault	• Poor neutral connection.	• Verify neutral wire connection to furnace and continuity to ground source.	• Turn power OFF prior to repair.
Furnace fails to operate.	E11	Open rollout switch.	• Gas pressure too high. • Burners mis-aligned. • Restricted heat exchanger or venting.	• Check and correct gas pressure. • Check and correct burner alignment. • Check and correct restriction	• Turn power OFF prior to repair.
Furnace fails to operate.	EEA	Polarity if 115 volt AC is reversed.	• Polarity of 115 volt AC power to furnace or integrated control module is reversed. • Poor furnace ground.	• Review wiring diagram to correct polarity. • Verify proper ground. Correct if necessary. • Check and correct wiring.	• Turn power OFF prior to repair.

1 STAGE TROUBLESHOOTING CODES

Symptom	LED Status	Fault Description	Possible Causes	Corrective Action(s)	Notes & Cautions
Furnace fails to operate.	EEb	Gas valve is not energized when it should be. External gas valve error.	• Miswired gas valve circuit. • Open gas valve circuit. • Gas valve relay on integrated control board stuck open.	• Check wiring in gas valve circuit. • Replace integrated control board.	• Turn power OFF prior to repair.
Furnace fails to operate.	EEC	Gas valve is energized when it should not be. Internal gas valve error.	• Miswired gas valve circuit. • Shorted gas valve wiring. • Gas valve relay on integrated control board stuck open.	• Check wiring in gas valve circuit. • Replace integrated control board.	• Turn power OFF prior to repair.
Furnace fails to operate.	EEE	Internal Faults or IRQ Loss in integrated control board.		• Replace integrated control board.	• Turn power OFF prior to repair.
Twinning feature not working.	EEH	TWIN error.	• Both furnaces not on the same 115 volt power from breaker. • Low voltage wiring error or loose wiring connections.	• Verify 115 volt power to each furnace. • Check wiring connections. • Replace integrated control board if necessary.	• Turn power OFF prior to repair.
Furnace fails to operate.	EEJ	Inducer relay error.		• Replace integrated control board	• Turn power OFF prior to repair. • Replace the integrated control board with proper replacement part.
Furnace fails to operate.	EEL	Problem with igniter circuit.	• Improperly connected igniter. • Shorted igniter. • Poor furnace ground. • Igniter relay fault on integrated control module.	• Check and correct wiring from integrated control board to igniter. • Replace shorted igniter. • Check and correct furnace ground wiring. • Check igniter output from control. Replace if necessary.	• Turn power OFF prior to repair. • Replace igniter with correct replacement part. • Replace control with correct replacement part.
Furnace fails to operate.	EEn	Igniter open.	• Loose or incorrect wiring from integrated control board to igniter. • Damaged igniter.	• Check and correct wiring from integrated control board to igniter. • Replace igniter if necessary.	• Turn power OFF prior to repair. • Replace igniter with correct replacement part.
Furnace stops heating and only the fan is operating.	EAF	Furnace has lost communication with the R-32 sensor and the furnace is in mitigation mode.	• Furnace may not be paired with R-32 Cooling Unit. Refer to the R-32 Information Section. • Loose or damaged R-32 sensor wire.	• Verify wire connection to R-32 sensor is not loose. • Verify the R-32 sensor wire is not damaged. • Replace R-32 sensor if necessary.	• Turn power OFF prior to repair. • Replace R-32 sensor with proper replacement part.
Furnace stops heating and only the fan is operating.	EAL	R-32 sensor has detected a refrigerant leak and furnace is in mitigation mode.		• Investigate the indoor coil for a refrigerant leak. • Furnace will resume normal operation once a leak is no longer detected and the 5-minute delay period is over.	• Turn power OFF prior to repair.
Furnace stops heating and only the fan is operating.	EAS	R-32 sensor has detected a fault and furnace is in mitigation mode.		• Investigate the R-32 sensor. • Replace the R-32 sensor if necessary.	• Turn power OFF prior to repair. • Replace R-32 sensor with proper replacement part.
Furnace stops heating and only the fan is operating.	EAr	A2L relay in the furnace control board has detected a fault and furnace is in mitigation mode.		• Investigate the A2L relay. • Cycle power to the furnace. • Replace the integrated control board if necessary.	• Turn power OFF prior to repair. • Replace the integrated control board with proper replacement part.

WIRING DIAGRAM

A/G*9S80*****AA

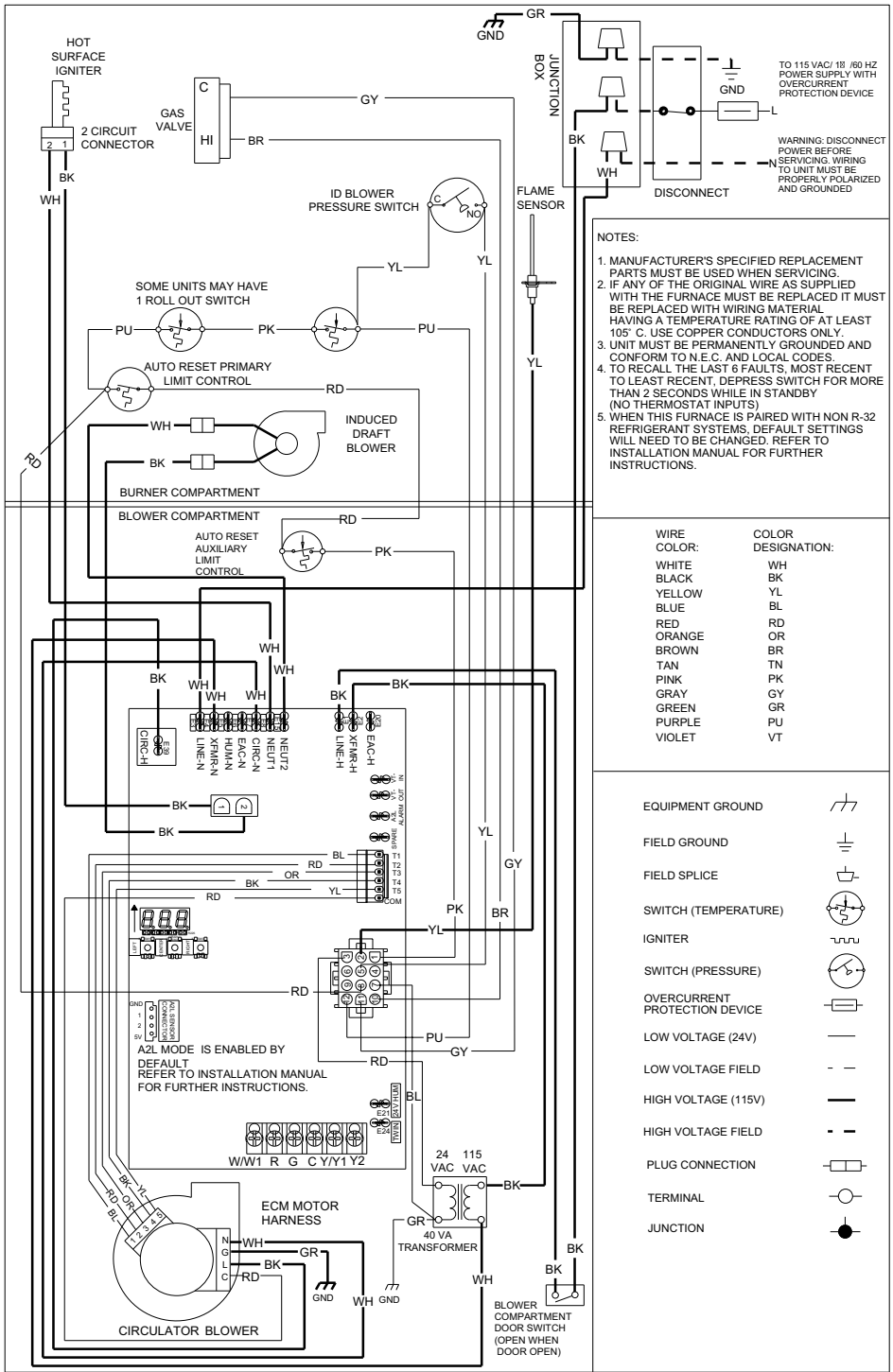

NOTES:

1. MANUFACTURER'S SPECIFIED REPLACEMENT PARTS MUST BE USED WHEN SERVICING.
2. IF ANY OF THE ORIGINAL WIRE AS SUPPLIED WITH THE FURNACE MUST BE REPLACED IT MUST BE REPLACED WITH WIRING MATERIAL HAVING A TEMPERATURE RATING OF AT LEAST 105˚ C. USE COPPER CONDUCTORS ONLY.
3. UNIT MUST BE PERMANENTLY GROUNDED AND CONFORM TO N.E.C. AND LOCAL CODES.
4. TO RECALL THE LAST 6 FAULTS, MOST RECENT TO LEAST RECENT, DEPRESS SWITCH FOR MORE THAN 2 SECONDS WHILE IN STANDBY (NO THERMOSTAT INPUTS)
5. WHEN THIS FURNACE IS PAIRED WITH NON R-32 REFRIGERANT SYSTEMS, DEFAULT SETTINGS WILL NEED TO BE CHANGED. REFER TO INSTALLATION MANUAL FOR FURTHER INSTRUCTIONS.

WIRE COLOR:	COLOR DESIGNATION:
WHITE	WH
BLACK	BK
YELLOW	YL
BLUE	BL
RED	RD
ORANGE	OR
BROWN	BR
TAN	TN
PINK	PK
GRAY	GY
GREEN	GR
PURPLE	PU
VIOLET	VT

EQUIPMENT GROUND
FIELD GROUND
FIELD SPLICE
SWITCH (TEMPERATURE)
IGNITER
SWITCH (PRESSURE)
OVERCURRENT PROTECTION DEVICE
LOW VOLTAGE (24V)
LOW VOLTAGE FIELD
HIGH VOLTAGE (115V)
HIGH VOLTAGE FIELD
PLUG CONNECTION
TERMINAL
JUNCTION

ERROR CODE STATUS READ CODES FROM LEFT TO RIGHT	SEVEN SEGMENT DISPLAY Seg#3	Seg#2	Seg#1
INTERNAL FAULTS OR IRQ LOSS	E	E	E
LOCKOUT DUE TO EXCESSIVE RETRIES RECYCLE	E	E	0
PRESSURE SWITCH STUCK CLOSED	E	E	1
PRESSURE SWITCH OPEN	E	E	2
OPEN HIGH LIMIT SWITCH	E	E	3
FLAME DETECTED WHEN NO FLAME SHOULD BE PRESENT	E	E	4
OPEN FUSE	E	E	5
LOW FLAME SIGNAL	E	E	6
IGNITOR RELAY FAULT	E	E	L
REVERSED LINE POLARITY OR GROUNDING ERROR	E	E	A
INTERNAL GAS VALVE ERROR	E	E	b
EXTERNAL GAS VALVE ERROR	E	E	C
OPEN ROLLOUT SWITCH	E	1	1
IGNITOR OPEN	E	E	n
INDUCER RELAY ERROR	E	E	J
TWIN ERROR	E	E	H
LOW CIRCULATOR CURRENT	E	b	L

ERROR CODE STATUS READ CODES FROM LEFT TO RIGHT	SEVEN SEGMENT DISPLAY Seg#3	Seg#2	Seg#1
CIRCULATOR CURRENT UNEXPECTED	E	b	U
A2L COMMUNICATION ALARM	E	A	F
A2L LEAKAGE ALARM	E	A	L
A2L INTERNAL ALARM	E	A	S
A2L RELAY ALARM	E	A	r

0140F20001-B

WARNING

HIGH VOLTAGE!
Disconnect ALL power before servicing or installing this unit. Multiple power sources may be present. Failure to do so may cause property damage, personal injury or death.

WIRING DIAGRAM

A/G*9S80*****AB

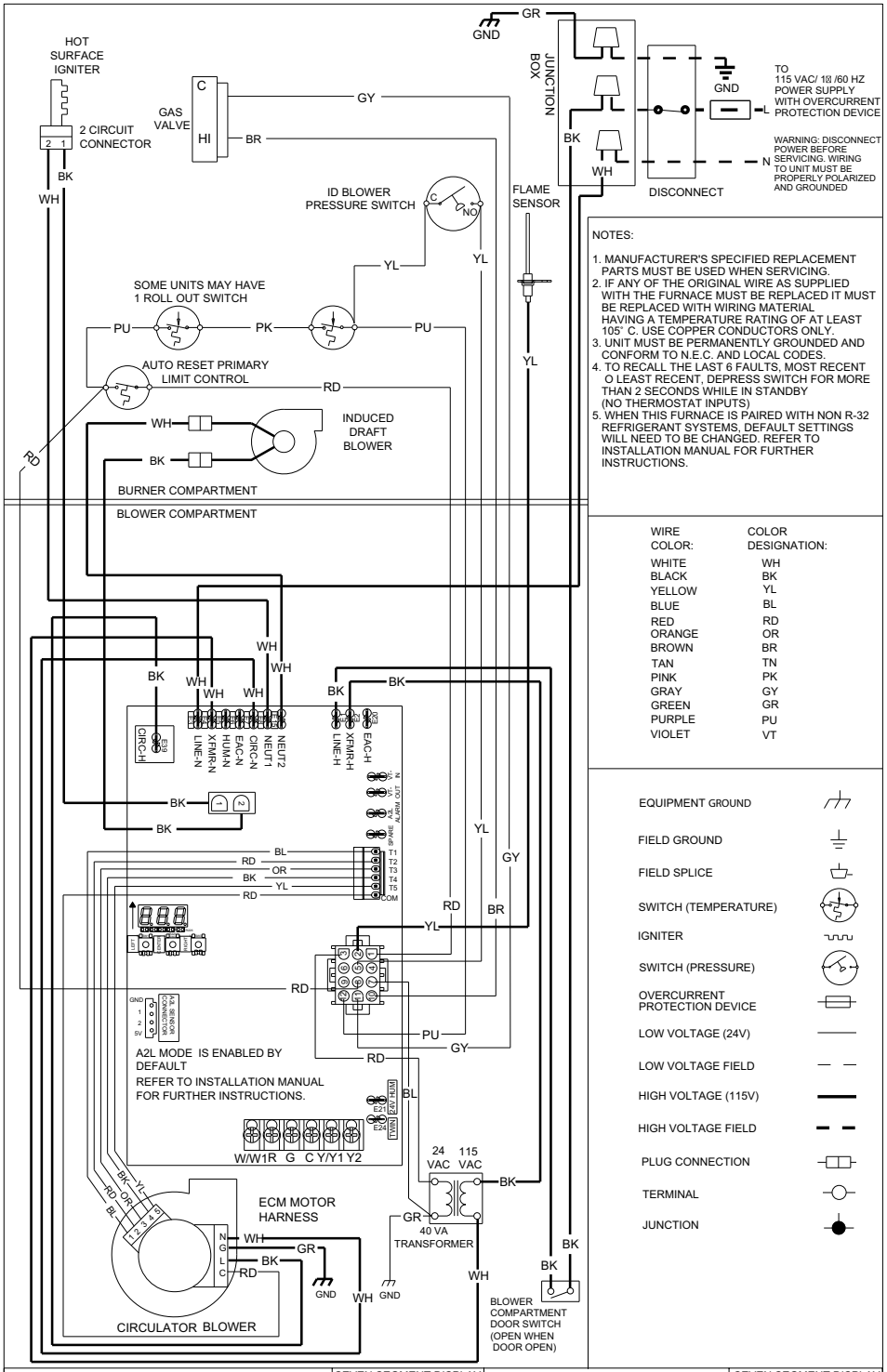

WARNING

HIGH VOLTAGE!
Disconnect ALL power before servicing or installing this unit. Multiple power sources may be present. Failure to do so may cause property damage, personal injury or death.

ERROR CODE STATUS READ CODES FROM LEFT TO RIGHT	SEVEN SEGMENT DISPLAY Seg#3	Seg#2	Seg#1
INTERNAL FAULTS OR IRQ LOSS	E	E	E
LOCKOUT DUE TO EXCESSIVE RETRIES RECYCLE	E	E	0
PRESSURE SWITCH STUCK CLOSED	E	E	1
PRESSURE SWITCH OPEN	E	E	2
OPEN HIGH LIMIT SWITCH	E	E	3
FLAME DETECTED WHEN NO FLAME SHOULD BE PRESENT	E	E	4
OPEN FUSE	E	E	5
LOW FLAME SIGNAL	E	E	6
IGNITOR RELAY FAULT	E	E	L
REVERSED LINE POLARITY OR GROUNDING ERROR	E	E	A
INTERNAL GAS VALVE ERROR	E	E	b
EXTERNAL GAS VALVE ERROR	E	E	C
OPEN ROLLOUT SWITCH	E	1	1
IGNITOR OPEN	E	E	n
INDUCER RELAY ERROR	E	E	J
TWIN ERROR	E	E	H
LOW CIRCULATOR CURRENT	E	b	L

ERROR CODE STATUS READ CODES FROM LEFT TO RIGHT	SEVEN SEGMENT DISPLAY Seg#3	Seg#2	Seg#1
CIRCULATOR CURRENT UNEXPECTED	E	b	U
A2L COMMUNICATION ALARM	E	A	F
A2L LEAKAGE ALARM	E	A	L
A2L INTERNAL ALARM	E	A	S
A2L RELAY ALARM	E	A	r

0140F20077-A

Wiring is subject to change. Always refer to the wiring diagram on the unit for the most up-to-date wiring.

START-UP CHECKLIST

Furnace				
	Model Number			
	Serial Number			
ELECTRICAL				
Line Voltage (Measure **L1 to N** and **N to Ground** Voltage)	L - N			
	N - G			
Secondary Voltage (Measure Transformer Output Voltage)	R - C			
Blower Amps				
BLOWER EXTERNAL STATIC PRESSURE				
Return Air Static Pressure			IN. W.C.	
Supply Air Static Pressure			IN. W.C.	
Total External Static Pressure (Ignoring +/- from the reading above, add total here)			IN. W.C.	
TEMPERATURES				
Return Air Temperature (Dry bulb / Wet bulb)			DB °F	WB °F
Cooling Supply Air Temperature (Dry bulb / Wet bulb)			DB °F	WB °F
Heating Supply Air Temperature			DB °F	
Temperature Rise			DB °F	
Delta T (Difference between Supply and Return Temperatures)			DB °F	
GAS PRESSURES				
Gas Inlet Pressure			IN. W.C.	
Gas Manifold Pressure (Low Fire)			IN. W.C.	
Gas Manifold Pressure (High Fire)			IN. W.C.	
Gas Type (NG) = Natural Gas / (LP) = Liquid Propane				
Additional Checks				
Check wire routings for any rubbing				
Check for kinked pressure switch tubing.				
Check flue elbow for alignment and clamp tightness.				
Check screw tightness on blower wheel.				
Check factory wiring and wire connections.				
Check product for proper clearances as noted by installtion instructions				
Check R-32 sensor wire is connected properly (if applicable)				
°F to °C formula: (°F - 32) divided by 1.8 = °C	**°C to °F formula: (°C multiplied by 1.8) + 32 = °F**			

THIS PAGE IS INTENTIONALLY LEFT BLANK

THIS PAGE IS INTENTIONALLY LEFT BLANK

THIS PAGE IS INTENTIONALLY LEFT BLANK

CUSTOMER FEEDBACK
We are very interested in all product comments.
Please fill out the feedback form on one of the following links:
Goodman® Brand Products: (http://www.goodmanmfg.com/about/contact-us).
Amana® Brand Products: (http://www.amana-hac.com/about-us/contact-us).
You can also scan the QR code on the right for the product brand you purchased to be directed to the feedback page.

GOODMAN® BRAND

AMANA® BRAND

Our continuing commitment to quality products may mean a change in specifications without notice.

© 2025 Daikin Comfort Technologies Manufacturing, Inc.
19001 Kermier Rd., Waller, TX 77484
www.goodmanmfg.com • www.amana-hac.com
Amana is a registered trademark of Maytag Corporation or its related companies and is used under license.
All rights reserved.