Technical Manual

Triton V2 UL Natural-cooling Dispenser

StarCharge

Legal Notice

This document is an integral part of the technical documentation and is protected by copyright. Without written consent, any use outside the strict limits of copyright law is prohibited. This also applies to files that are duplicated, translated, and photographed, and files that are stored and processed using electronic media. Any party who violates this provision will be liable for compensation claims!
The information presented in this guide is subject to change without prior notice.
The technical specifications indicated here do not constitute a contractual obligation.

In case of any doubt regarding a subject described or if you discover an error in this manual, please contact us.

Contents

Legal Notice 1
Contents 2
Abbreviations 6
1 Introduction 7
1.1 Function of this document 7
1.2 Target user 7
1.3 Version and revision history 7
1.4 Disclaimer 8
1.5 Copyright 8
1.6 Warranty 9
1.7 Supplier 9
1.7.1 Europe 9
1.7.2 APAC 9
1.7.3 Americas 10
2 Safety 12
2.1 General safety 12
2.2 Safety symbols 13
2.3 Environmental conditions 13
2.4 Engineer requirements 14
2.4.1 Normal requirements 14
2.4.2 Responsibility requirements 14
2.4.3 Skill requirements 14
2.5 Safety guidelines for installation personnel 15
2.6 Fire safety guidelines for construction sites 16
2.7 Fire emergency response plans 16
2.7.1 Initiation of the plan 16
2.7.2 Contingency procedures 16
2.7.3 Concluding fire emergency response 17
2.8 Disposal 17
2.9 Emergency stop 18
3 Product overview 19
3.1 Nameplate 19
3.2 External view 21
4 Transport, storage, and unpacking 23
4.1 Transport to the site 23
4.2 Store the equipment 23
4.3 Unpacking inspection 24

4.3.1 Unpacking list 24
4.3.2 Inspection of unpacking 25
5 Installation 26
5.1 Prerequisites 26
5.2 Site preparation 26
5.2.1 Space requirements between EVSE and obstacles 27
5.2.2 Communication distance requirements 28
5.2.3 Airflow requirements 28
5.2.4 Canopy requirements 28
5.3 Cable preparation 30
5.4 Site preparation 30
5.4.1 Wall mounted site requirements ..... 错误！未定义书签。
5.4.2 Gantry mounted site requirements ..... 错误！未定义书签。
5.5 Grounding/insulation resistance check 30
5.6 Hoisting 31
5.7 Fixing ..... 错误！未定义书签。
5.7.1 Wall mounted fixing ..... 错误！未定义书签。
5.7.2 Gantry mounted fixing ..... 错误！未定义书签。
5.8 Electrical installation 34
5.8.1 Electrical schematic diagram 34
5.8.2 Cable wiring 36
5.9 Check after installation 40
5.9.1 Installation and wiring check 40
5.9.2 Check before power on the EVSE 40
5.9.3 Check on power-on 41
5.10 Completion information 41
5.11 Appendix 42
Appendix 1 Unpacking Record Sheet 42
Appendix 2 Pre-installation Checklist 43
Appendix 3 Post-installation Checklist 44
6 Commissioning 45
6.1 Prerequisites 45
6.2 Commissioning flowchart 46
6.3 Installation recheck 47
6.4 EVSE power on and check 47
6.4.1 Pre-power-on check 47
6.4.2 EVSE Power on 51
6.4.3 Recheck after power on 53

6.5 Laptop configuration 53
6.6 Login web UI with the preset password 56
6.7 The unique IP address setting of the user unit 58
6.7.1 RealGunID configuration (Important) 58
6.7.2 Login to the charger via the unique IP address 61
6.8 OCPP connection 62
6.9 Introduction to the User Unit Web UI 62
6.9.1 Verify the status of the user unit 62
6.9.2 Basic configuration setting of the user unit 65
6.9.3 Charger configuration (Optional) 68
6.9.4 Debug Assistant (Optional) 72
6.9.5 Upload (Optional) 73
6.9.6 Account Management 74
6.10 Manually upgrade firmware 74
6.10.1 Update SECC via Micro SD card 74
6.10.2 Update Multifunction Control board (CB02)/PDU control board/Environmental monitoring board via Micro SD card 78
6.10.3 Update AM62 board via Micro SD card 82
6.11 Charging function check 85
6.11.1 Charging testing 85
6.11.2 Hardware function check 85
6.11.3 Liquid cooling device charging test ..... 错误！未定义书签。
6.12 Customer training 86
6.13 Appendix 87
Appendix 1 Post-installation Checklist 87
Appendix 2 Customer Training Record Sheet 88
Appendix 3 Commissioning Report 89
Appendix 4 Required tools for commission 97
7 Preventive Maintenance 99
7.1 External and environmental checks 100
7.2 Functionality checks and tests 102
7.3 Charging connector inspection 103
7.4 Electrical checks and tests 104
7.5 New Electric Vehicles (EV) / e-buses interoperability tests 104
7.6 Charging test 105
8 Corrective Maintenance 106
8.1 Could not access web panel 106
8.2 No network connection 107

8.3 EVSE is offline 109
8.4 Power module communication fault 110
8.5 No response after plug in 115
8.6 Meter communication failure 118
8.7 Input under-voltage fault 119
8.8 Input over-voltage fault 119
8.9 Insulation fault 120
8.10 User unit door is open 121
8.11 No effective current output 122
8.12 No response after swiping a card 123
8.13 Cannot reach the maximum output capacity 124
8.14 Cooling fan malfunction 124
8.15 Power supply is normal, PCB boards are not on 124
8.16 Output over current 125
8.17 With voltage but no current 125
8.18 MCCB disconnected 125
8.19 Input surge protection alarm 126
9 Technical specifications 127
9.1 Technical data 127
9.1.1 General parameters 127
9.1.2 Input parameters and grid parameters 127
9.1.3 Output parameters 127
9.1.4 Environmental parameters 127
9.1.5 Communication parameters 128
9.1.6 User Interface & control 128
9.1.7 Mechanical parameters 128
9.2 Required tools 129
9.2.1 Required tools for installation 129
9.2.3 Bolts recommended Torque reference sheet 131
9.4 Compliance and standard adhered to 132
9.4.1 Certification 132
9.4.2 Standards 132
Customer service 133

Abbreviations

AC	Alternating Current
GBT	Guobiao Recommended Standard
CCS1	Combined Charging System 1
CCS2	Combined Charging System 2
NACS	North American Charging Standard
CMS	Cable Management System
CP	Control Pilot
DC	Direct Current
EV	Electric Vehicle
EVSE	Electric Vehicle Supply Equipment
IMD	Insulation Monitoring Device
LED	Light Emitting Diode
MCB	Miniature Circuit Breaker
MCCB	Molded Case Circuit Breaker
OCPP	Open Charge Point Protocol
PDU	Power Distribution Unit
PSU	Power Supply Unit
RCBO	Residual Current Circuit Breaker with Overcurrent Protection Device
RFID	Radio Frequency Identification
SPD	Surge Protective Device
SECC	Supply Equipment Communication Controller
UI	User Interface

1 Introduction

1.1 Function of this document

This manual is only for the charging system, a type of equipment that charges Electric Vehicles (EV). This manual tells you how to safely:

- Install the Electric Vehicle Supply Equipment (EVSE).
- Commission the EVSE for the first time.
- Perform basic maintenance tasks.

1.2 Target user

This manual is for:

- **EVSE owners:** These are people who own and operate the EVSE for commercial or business purposes, or who may allow others to use it. EVSE owners are legally responsible for protecting users, other employees, and third parties while the EVSE is in operation.
- **Qualified engineers:** These are people who are fully familiar with the EVSE and are responsible for installing, operating, commissioning, and maintaining it. Qualified engineers should have knowledge of electrical safety, understand the principles and performance of chargers, and follow all local rules and instructions in this manual.

1.3 Version and revision history

The version of this document is V1.0.0 and the revision history is as follows.

Version	Date	Description
V 1.0.0		First edition

Table 1-1 Version of the technical manual

1.4 Disclaimer

- This manual was carefully reviewed by experts before it was published. It will be updated regularly to include any necessary changes or additions.
- The information in this manual is for informational purposes only.
- This manual, related manuals, and warnings do not replace your responsibility to use common sense when working with the EVSE.
- StarCharge has done its best to make sure the manuals are accurate and up to date, but they are not responsible for any problems or damage that may come from using the information in them.
- StarCharge is not responsible for any direct, indirect, special, or consequential damage (including loss of profits) that may come from any errors or omissions in this manual. All of StarCharge's obligations are stated in the relevant contracts. StarCharge reserves the right to change this manual from time to time.
- Any changes to the EVSE, including but not limited to user-specific modifications to the EVSE (such as placing stickers, SIM cards, or using different colors), hereinafter referred to as "Customization", may affect the final product's user experience, appearance, quality, and/or lifespan.
- StarCharge is not responsible for any damage to or caused by the product "Customization " and is not responsible for any damage, losses, costs, or expenses resulting from the improper handling of the product.
- Contact your dealer for more information on "Customization " versus the default product.

1.5 Copyright

All rights reserved. The disclosure, duplication, distribution and editing of this document, or utilization and communication of the content are not permitted, unless authorized in writing. All rights, including rights created by patent grant or registration of a utility model or a design, are reserved.

1.6 Warranty

The warranty period is defined in your warranty policy. If you have purchased an extended warranty, the warranty period is defined in your purchase agreement.
The warranty only covers the product and its parts delivered by StarCharge. The warranty does not cover consumable parts such as cables and connectors, any other materials, labor, accommodation, or travel costs.
Changes or modifications to the equipment, unless specifically agreed upon with StarCharge, will void the warranty.

- When you replace parts under warranty, keep the old parts until you know that StarCharge does not need them for inspection.
- Installation, operation, commissioning, and maintenance tasks should only be done by the people described in Chapter 1.2. If someone who is not authorized to do these tasks does them, the warranty may be void.

1.7 Supplier

1.7.1 Europe

StarCharge Europe GmbH
Am Prime Parc 17, 3.OG, Raunheim 65479, Germany
Customer service hotline: +44 20 7096 1752
Customer service E-mail: Service.europe@starcharge.com
Homepage: www.starcharge.com

1.7.2 APAC

StarCharge Energy Pte., Ltd.
1 Harbourfront Pl, 04-09; Singapore 098633
Customer service hotline: +60 15 4600 0603
Global customer service E-mail: service.global@starcharge.com
Homepage: www.starcharge.com

1.7.3 Americas

StarCharge Americas Corp.

46583 Fremont Blvd., Fremont, CA 94538

Customer service hotline:

- For North America: (917) 242-3088
- For South America: +55 21 2018 6947

Global customer service E-mail: service.global@starcharge.com
Homepage: www.starchargeamericas.com

2 Safety

The charging system from StarCharge is only meant to be used for charging EVs. To use it safely and properly, it is important to follow the instructions in this manual and on the EVSE itself, as well as all local rules and regulations.
This EVSE has been developed, manufactured, inspected, and filed in accordance with all relevant safety standards. Therefore, if you can follow the instructions and safety tips for installation, commissioning, and maintenance, the EVSE will not cause property damage or harm your health under normal circumstances.

2.1 General safety

- Do not use the EVSE:
  - Near explosives or flammable substances.
  - In or near water.
  - If it is visibly damaged.
- Do not clean the EVSE with running water or a pressure washer.
- Do not change or modify the EVSE unless StarCharge has approved of it.
- Do not wrap the cables around the EVSE while charging.
- Do not put the connector on the ground. Put it in its holder after charging.
- Only do things that are described in this manual or the related manual, and that you are qualified to do.
- Follow the safety rules and accident prevention rules for the EVSE and the area where it is used.
- Make sure the EVSE is used in the environmental conditions that are specified for it. For more information about environmental conditions, refer to Chapter 6.1.4.
- Only qualified electricians (StarCharge certified partners) should install, operate, commission, and maintain the EVSE.
- All installation and wiring must be done when the AC cables are not energized. This means that the EVSE cannot be turned on during this process. This helps to prevent electrical accidents, short circuits, and electric shock hazards. It makes sure that the system is not turned on during risky procedures, which reduces the chance of fires during installation or maintenance.
- When handling electrical connections, always follow safety protocols, wear the necessary personal protective equipment (PPE), and use insulated tools.
- Follow the local rules and the instructions in this manual. If any requirements in this manual are not the same as the local rules, follow the local rules or the stricter of the two, as allowed by law.

2.2 Safety symbols

Symbols	Meanings
	Electric hazard: This symbol indicates that there is a danger of electric shock. Failure to pay attention to the procedures, practices or improper implementation may cause injuries or death.
	Caution: This symbol indicates that there is a hazard that could damage the product.
	Warning: This symbol calls attention to an act or condition which CAN lead to serious personal injury or death if not avoided.
	Tips: This symbol indicates that the information is helpful or provides useful advice. It does not contain any information about danger or harm.
	Garbage disposal: This symbol indicates that the electrical and electronic equipment and their accessories should be disposed of separately from household waste.

Table 2-1 Safety symbols

2.3 Environmental conditions

You must use the EVSE in the environmental conditions that are specified for it. This is important for the EVSE to work properly and safely. For more information about environmental conditions, refer to Chapter 6.1.4.

2.4 Engineer requirements

2.4.1 Normal requirements

Engineers responsible for installation, operation, commissioning, and maintenance should:

- Be trained in safety and job skills and pass any corresponding assessments.
- Follow the local rules and the instructions in this manual. If any requirements in this manual are different from the local rules, follow the local rules or the stricter of the two, as required by law.
- Learn the electrical safety requirements and how to do first aid and emergency treatment for electric shock.
  - If there is a safety accident, immediately start the emergency plan and report it to the relevant person in charge. Also, provide first aid and emergency treatment according to the plan, control the spread of the issue, and rescue people and property.
  - If there is an electric shock, immediately shut off the power and assist the person using the approved emergency rescue method. At the same time, call for professional help, report to the relevant person in charge, and make a record.
- Strictly follow the operating procedures and job specifications when working to ensure safety and stability.
- Wear a uniform, insulated shoes and gloves, a safety helmet, and other protective gear if necessary. Also make sure there is a valid work permit if required,
- Be responsible for their work and fulfill their service commitments to the best of their abilities.
- Communicate with customers in a professional and courteous manner using clear and concise language.

2.4.2 Responsibility requirements

Engineers responsible for EVSE installation, operation, commissioning, and maintenance are accountable for:

- Making sure the EVSE is safe to use
- Improving the EVSE's safety system
- Regularly checking the EVSE for safety issues
- Monitoring and reporting on the EVSE's safety status

2.4.3 Skill requirements

Engineers responsible for EVSE installation, operation, commissioning, and maintenance should:

- Understand how EVs and EVSEs work, how to troubleshoot common problems, how to maintain EVSEs, how to handle emergencies, and safety knowledge.
- Be familiar with the relevant national safety rules and regulations and understand charging

safety and emergency procedures.

2.5 Safety guidelines for installation personnel

- Safety:
  - Follow the safety rules of the construction site.
  - Wear a properly fastened safety helmet and make sure it is in good condition.
  - Do not wear unsafe clothing, such as loose clothes or slippers.
  - Do not go to work inebriated.
- Working at heights:
  - Always wear a safety helmet and ensure it is properly fastened, fasten your safety belt, and wear non-slip shoes.
  - Tie up your work tools.
  - Be careful when entering areas such as foundation pits, roofs, and openings to prevent accidental falls.
- Protective measures:
  - If there is heavy dust at the construction site or painting work is being done, wear a protective mask.
  - Do not enter dangerous areas where materials are being lifted above you.
  - Do not strike objects.
  - Stay away from mechanical equipment and electrical circuits to prevent accidents.
- When using portable power tools:
  - Make sure you know how to use the tools safely.
  - Wear insulated shoes and gloves.
  - Make sure the tools are properly grounded.
- Temporary electricity:
  - Replace damaged electrical components immediately.
  - Temporary wires must be made of rubber cables, not plastic flexible cords.
  - Do not plug temporary wires directly into sockets.
  - Do not use temporary electrical components when they are live.
- Ground conditions:
  - Be careful of ground conditions with iron nails and steel bars.
  - This is to prevent injuries such as piercing, touching, hanging, and falling.
- Site maintenance:
  - Do not dismantle construction site protection facilities, safety signs, and warning signs without permission.
  - Maintain construction equipment in good condition.
  - This is to prevent malfunctions or overload operation.
- EVSE usage: Keep the door of the EVSE closed after installing it to prevent water intrusion from

rain.

2.6 Fire safety guidelines for construction sites

- Flammable and explosive materials:
  - Do not store flammable or explosive materials at the construction site.
  - Set up proper storage areas for these materials to prevent accidents.
- Fire extinguishers:
  - The construction site must have at least two fire extinguishers to respond to any possible fire hazard. We recommend carbon dioxide fire extinguishers.
- Placement of fire extinguishers:
  - Place fire extinguishers in a location that is easy to see and access.
  - Make sure they do not block any evacuation routes.
  - This ensures that they can be quickly and safely accessed in an emergency.

2.7 Fire emergency response plans

2.7.1 Initiation of the plan

If a fire happens, tell the person in charge immediately. Everyone must follow the orders of the emergency response team to help rescue people and clean up the damage.

2.7.2 Contingency procedures

- If you see a fire accident:
  - Stop charging immediately. If the fire is in the charging station, stop the charging process to prevent the fire from getting worse.
  - Call the fire department right away and tell them where the fire is.
  - Evacuate safely. Get away from the fire quickly and stay away from it.
  - Use a fire extinguisher (if possible). If the fire is small, you can use a fire extinguisher to put it out. But make sure you use the right type of fire extinguisher.
- If there is a fire:
  - Tell your supervisor right away.
  - If the fire is small and you can control it, use a fire extinguisher to put it out. While you are doing this, tell people at all levels about the fire.
  - Have at least two people fight the fire. Stand upwind, crosswind, or in a safe position.
  - If you cannot control the fire, have everyone in the area evacuate immediately.
  - If the fire gets bigger, the person in charge must evacuate everyone immediately.
  - Tell employees in the affected area to go to the assembly point along the designated route.

Follow the instructions of the person in charge of the company.

- The emergency response team (ERT) will organize rescue efforts according to the fire.
- If you cannot control the fire, report it to emergency services in time for support. Cooperate with the fire fighters for rescue efforts.
- Collect information about what happened before the fire, what the monitoring system showed, and what witnesses saw. This will help you to understand what caused the accident. You will need to share this information with the owner and the site.
- Give the local fire department the information they need to investigate the cause of the fire.

2.7.3 Concluding fire emergency response

When the emergency crews have finished their work, the people in charge of emergencies will announce that the danger is over, and the emergency is lifted. Then, everyone can go back to their normal work.

2.8 Disposal

In accordance with the European Directive 2012/19/EU, Waste Electrical and Electronic Equipment (WEEE) and its implementation in national law, the electrical devices including charge points which are used must be collected separately and recycled in an environmentally responsible manner. We recommend that you return your used device to your dealer or obtain information regarding a local, authorized collection and disposal system. Failure to comply with this EU Directive may result in a negative impact on the environment.

2.9 Emergency stop

- If there is an emergency, press the emergency stop button on the side of the dispenser to immediately turn off the power.
- If there is an emergency, press the emergency stop on the front of the power cabinet to immediately stop charging.
- When you press the emergency stop button, the screen will show a warning message that says, "Emergency Stop" and the status indicator will turn red.

- After you press the emergency stop, the EVSE will not work properly. Call our customer service number to fix the problem.
- When the problem is resolved, the emergency stop can only be reset by authorized persons.

3 Product overview

3.1 Nameplate

The following picture shows the nameplate format. The nameplate is located on the corresponding devices.

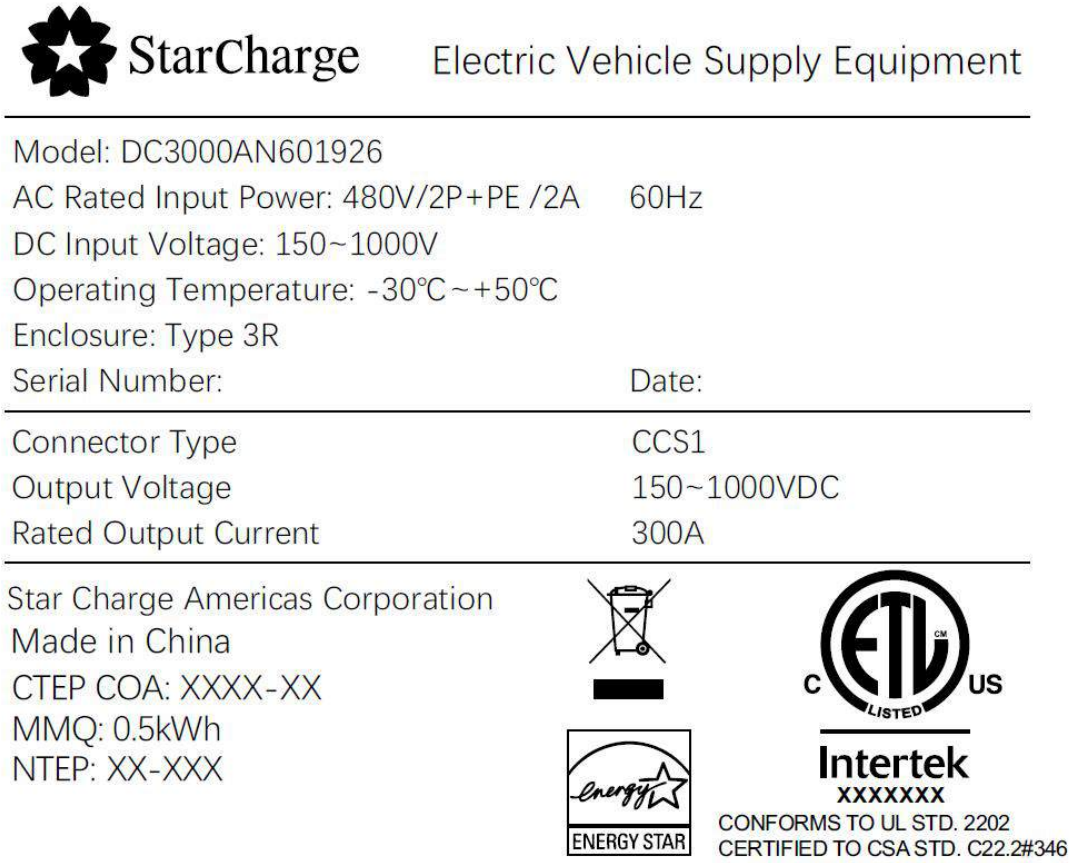

Figure 3-1 Nameplate Format for Dispenser

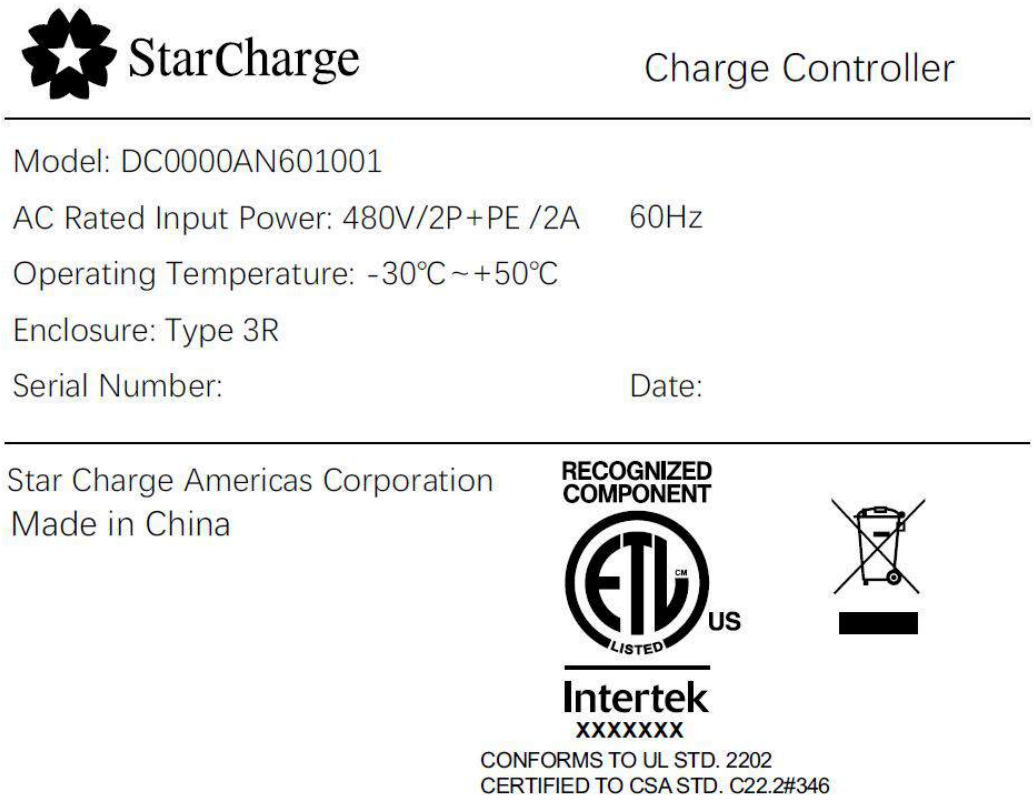

Figure 3-1 Nameplate Format for Charge Controller

3.2 External view

The figure below is for reference only, please refer to the actual product.

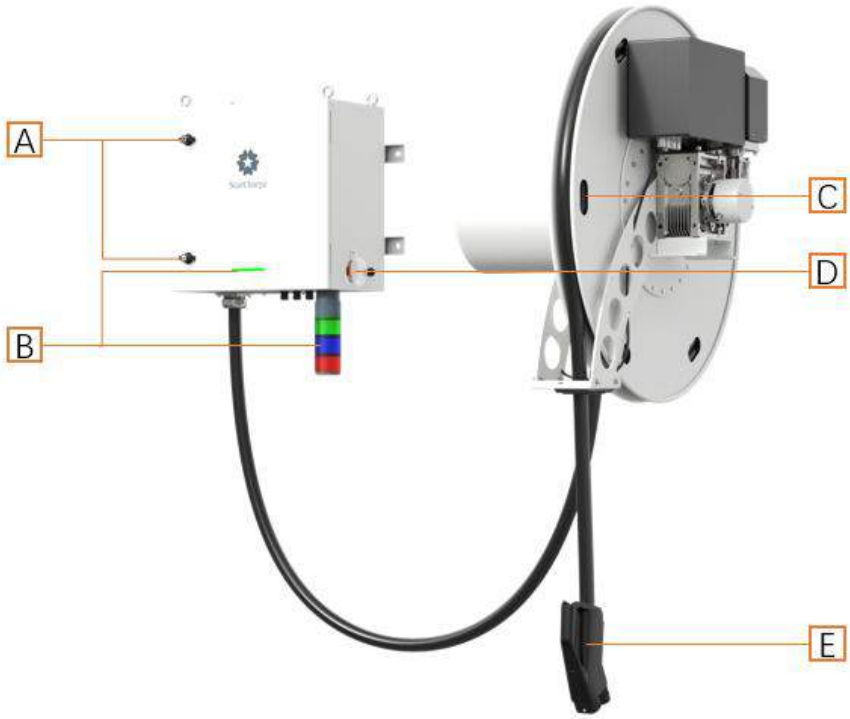

Figure 3-2 External view

A	Lock	D	Emergency button
B	Light	E	Charging connector
C	Charging reel		

Part	Name	Description
A	Lock	To lock the door of the dispenser.
B	Light	To indicate the charging status of the dispenser.
C	Charging reel	Motor cable management system.
D	Emergency button	To immediately stop charging of the dispenser. (For more information, refer to Chapter 2.9.)
E	Charging connector	To connect with EV to start charging.

Table 3-1 External component functions of the dispenser

A	Lock	C	Payment terminal
B	Emergency button	D	RFID card reader

Part	Name	Description
A	Lock	To lock the door of the dispenser.
B	Emergency button	To immediately stop charging of the dispenser. (For more information, refer to Chapter 2.9.)
C	Payment terminal	To read the information from a credit card to start or stop the charging process, and to pay for the charging session.
D	RFID card reader	To read the information from an RFID card to start or stop the charging process.

Table 3-1 External component functions of the charge controller

4 Transport, storage, and unpacking

4.1 Transport to the site

A transportation company is responsible for delivering the charging system to the site and moving it to the designated location.

You are not allowed to transport or handle the EVSE unless you have proper authorization and follow these safety measures.

Safety measures for handling EVSE equipment:

- Check the weight of the EVSE on the Unpacking list. Make sure that the offloading equipment you use can safely handle this weight.
- Check that the pallet is not damaged. If the pallet is damaged, contact the site manager for instructions on how to safely unload and move the EVSE.
- Check that the work area is safe before handling the load (e.g., there should be no obstacles in the unloading area, the flooring should be suitable, and there should be a safe path).
- Make sure that the forklift or hoisting equipment you use for loading/unloading is suitable and can move the EVSE safely. Also, check that the forks of the forklift can fully enter the pallet to support the EVSE. Forklift operators must follow all local regulations.
- Make sure that the area is not accessible to unauthorized personnel and that the personnel involved in handling the equipment are fully aware of the safety measures to be applied when handling the equipment. They should also stay a safe distance from moving equipment.
- All personnel involved in handling must wear the necessary personal protective equipment (PPE) and follow all relevant safety measures for the work area.

4.2 Store the equipment

If you need to store the EVSE before installing it, refer to Chapter 6.1.4 for the environmental specifications.

4.3 Unpacking inspection

It is best to transport the EVSE in its original packaging and only unpack it when you reach your destination. Once the EVSE arrives, the installation personnel shall do the following steps in the presence of the owner:

- Remove the packaging material.
- Discard the packaging material (refer to Chapter 2.8) or keep the packaging material for future use.
- Carry out the unpacking inspection and meticulously fill in the unpacking record in Appendix 1.
- If any problems are found in the process of unpacking and acceptance, make records and wait for the negotiation between the owner and the supplier.

4.3.1 Unpacking list

Packaging Specification

Item	Specification
Packing material	Wooden box
Configuration	Standard
Packaging size (W×D×H)	860x655x750 mm
Packaging weight	92.5kg

Package Content

No.	Item	QTY.
1	DC EVSE	1
2	Mounting template	1
3	Installation screws	5
4	Key	4
5	Wall mounting bracket	1

Table 4-1 Unpacking list

4.3.2 Inspection of unpacking

Unpacking inspection steps:

- Check the number of items on the unpacking list and make sure that all of the equipment is present.
- Check the information on the equipment report to make sure that it is correct.
- Check whether the attached documents are complete.
- Check whether the spare parts and accessories are complete.
- Check the delivery inspection report to make sure that it is present.
- Check the appearance of the equipment to make sure that there are no dents, bumps, stains, or other damage.
- Check whether the charging cable on the dispenser is securely attached.

5 Installation

5.1 Prerequisites

Before you start installing the charging system:

- Make sure you have read and understood all the safety instructions (refer to Chapter 2).
- Gather the tools you will need for the installation, based on the specific conditions of your site (refer to Chapter 6.2.1).
- Unpack the EVSE (refer to Chapter 4.3).
- Review the current and distribution capacity specifications (refer to Chapter 6.1.2).
- Check the installation environment (refer to Chapter 6.1.4).
- Follow the regulations in your country to install and connect the EVSE.
- Make sure that there is no voltage on the AC cables connected to the power cabinet during the installation process.
- Do the pre-installation check to make sure that the EVSE is ready to be installed (refer to Appendix 2).

5.2 Site preparation

Before installing the charging system, you must make sure that there is enough space between the power cabinet and the dispensers, between the EVSE and the surrounding obstacles, and between the EVSE and the EV. This is to ensure proper airflow and to allow for any necessary service or maintenance work.

5.2.1 Space requirements between EVSE and obstacles

If the back or side of the EVSE you are installing is near a wall or other obstacle, you must leave enough space for maintenance. See the diagram below for details.

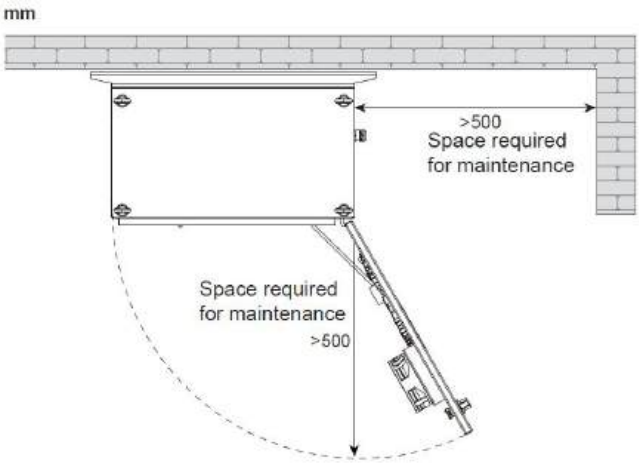

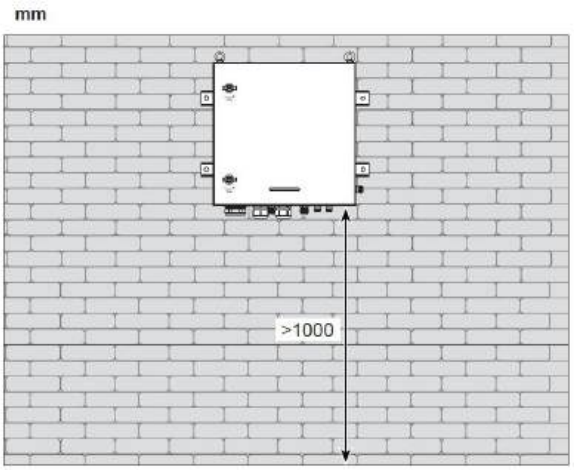

Figure 5-1 Maintenance distance for the dispenser

Figure 5-1 Maintenance distance for the charge controller

Figure 5-1 Maintenance distance for the charging reel

5.2.2 Communication distance requirements

It is recommended that the communication distance between the power cabinet and the dispenser, as well as between dispensers shall not exceed 80m to avoid the risk of communication anomalies.

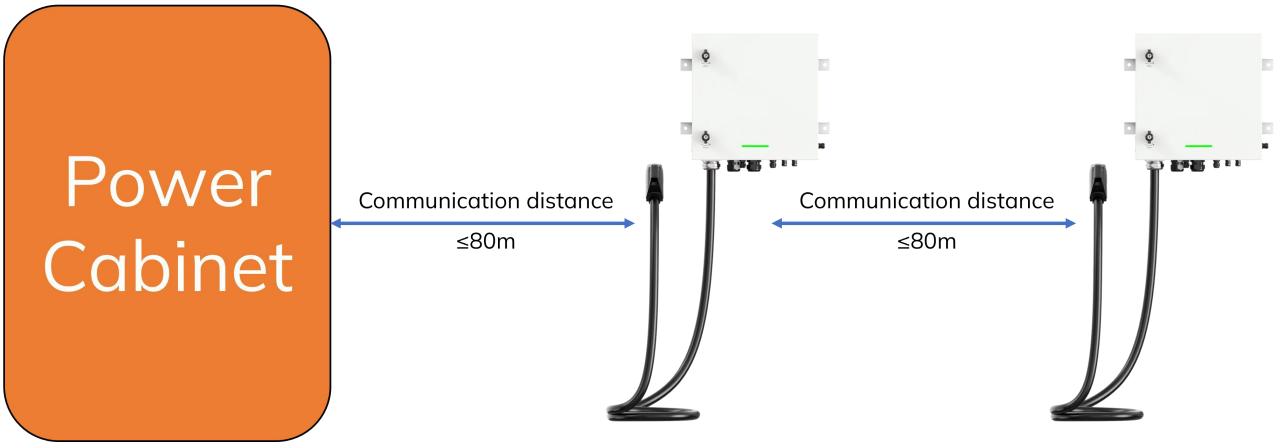

Figure 5-2 The network cable length

5.2.3 Airflow requirements

It is important to make sure that the equipment has enough air to circulate around it and that the air inlet and outlet are not blocked. If the air cannot circulate properly, the internal components will not be able to stay cool enough, and the power cabinet and dispenser will not work as well as they should.

5.2.4 Canopy requirements

The installation of canopies at the charging station must comprehensively consider structural safety, environmental adaptability, and user experience. Compliance with relevant international and local standards and regulations is required.

Note: it is recommended to construct a canopy for the EVSE. The requirements below are for reference only. The specific standards may vary depending on your local regulations.

5.2.4.1 General structural standards

- Consider wind loads, snow loads, and seismic requirements based on the station's location to ensure structural stability.
- The canopy size must align with vehicle movement requirements, meeting minimum clearance height standards (typically above 4.5 meters, can be adjusted based on operator's usage requirements).

- The reference standards are as follows:
  - ISO 3010: Principles for seismic design of buildings.
  - EN 1991 (Eurocode 1): Structural load standards, including snow, wind, and seismic loads.
  - EN 1993 (Eurocode 3): Steel structure design standards.
  - EN 1999 (Eurocode 9): Aluminum structure design standards.
  - ASCE 7: Minimum design loads for buildings and other structures, including wind, snow, and seismic considerations.

5.2.4.2 Environmental and durability standards

- Canopy materials should be high-strength, corrosion-resistant, and UV-resistant to ensure longevity.
- Use environmentally friendly materials to minimize ecological impact.
- Material Performance and Environmental Adaptability:
  - ISO 12944: Corrosion protection of coating systems for outdoor metal structures.
  - ISO 9223: Classification and design standards for atmospheric corrosion resistance.
  - ISO 14001: Environmental management systems.
  - ASTM G154: UV aging tests to assess material durability.

5.2.4.3 Fire safety and emergency evacuation

- Construct canopies using fire-resistant materials, especially for covered areas.
- Provide clear emergency evacuation signs, particularly in large stations.
- The reference standards are as follows:
  - ISO 834: Fire resistance tests for building components.
  - NFPA 5000: Building construction and safety code.
  - EN 13501: Fire classification for building materials and components.

5.2.4.4 User experience and accessibility design

- Provide adequate lighting (e.g., LED lights) to meet safety and operational needs at night.
- Canopy design should consider pedestrian and vehicle flow to avoid congestion or interference.
- The reference standards are as follows:
  - ISO 2575: Standards for road vehicle symbols and information, applicable to charging station signage.
  - EN 81-70: Accessibility design to ensure safe use by wheelchair users.
  - ADA (Americans with Disabilities Act): Accessibility Guidelines for Buildings and Facilities.

5.3 Cable preparation

Once the installation site is ready, check the cables according to “Wiring Guide”.

5.4 Site preparation

Make the installation holes on the gantry, according to the template provided with the dispenser.

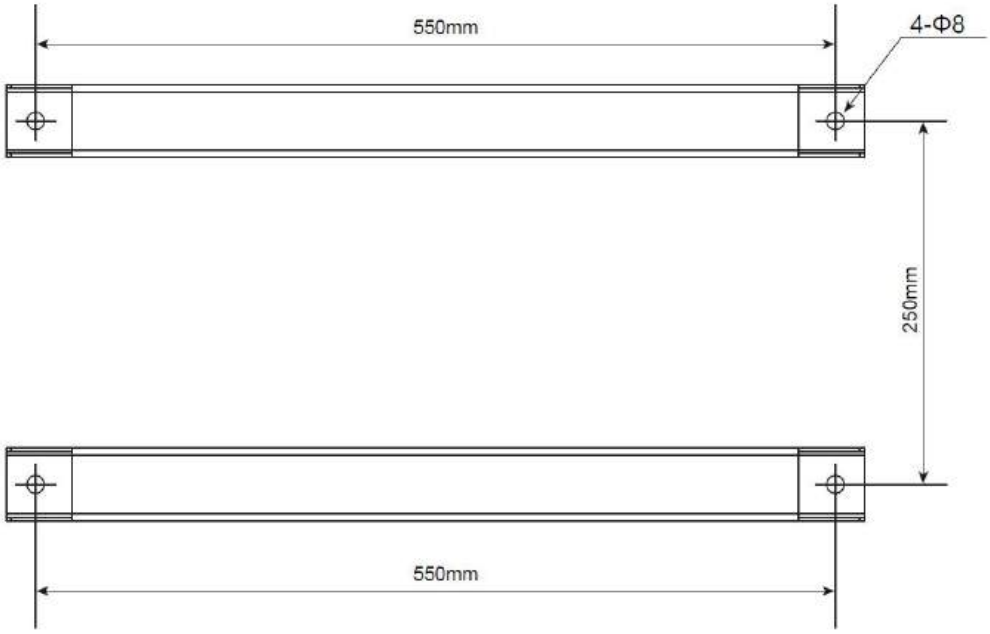

Figure 5-4 Mounting position

5.5 Grounding/insulation resistance check

- Verify that the grounding resistance test report to confirm that the grounding grid’s resistance created on-site is compliant with local regulations.
- Verify that the insulation resistance test report to confirm that the cable’s insulation resistance is ≥1MΩ.

The requirements above are the minimum requirements for installing an EVSE. The specific standards may vary depending on your local regulations.

5.6 Dispenser installation

Hoisting:

- Move the dispenser pallet close to the installation site.
- Attach firmly the hoisting ropes to the dispenser lugs while still on the bottom pallet.
- Prepare and secure in place the manual hoist.
- Ensure the gantry is prepared correctly.
- Prepare to hoist the dispenser.

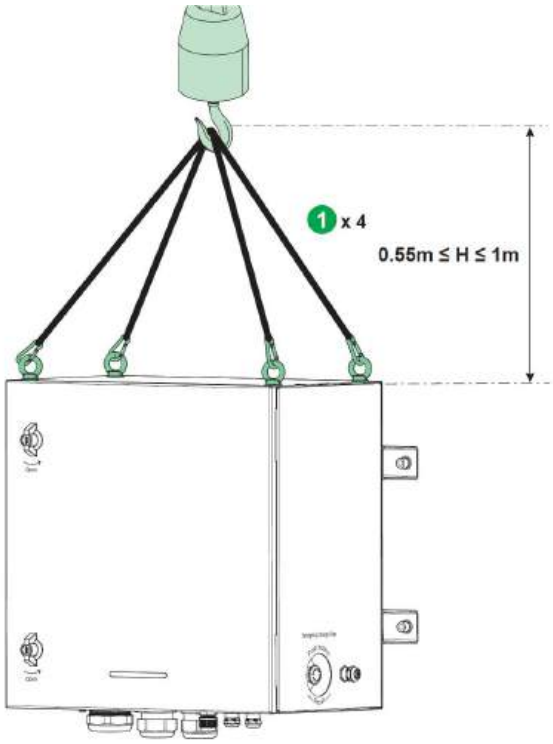

Figure 5-5 Hoisting

Fixing:

- Hoist the dispenser with the manual hoist slightly near to gantry.
- Mount the dispenser using the provided M8×50 screws on the holes on the gantry.

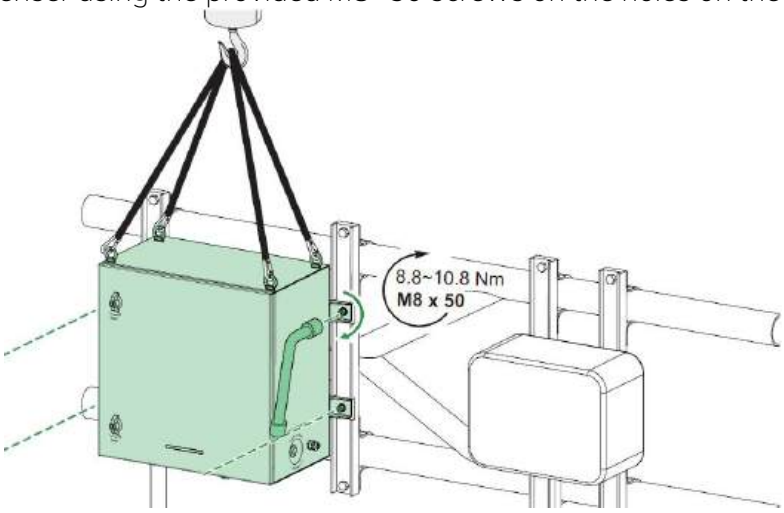

Figure 5-6 Gantry mounted fixing

5.7 Charging reel installation

Hoisting: Before attaching the belts to the reelbody(cf.drawing,items1,2and3)it has to be ensured that the reel spokes cannot be compressed during lifting. Should there not beany transportationlocks at the sepositions you will have to insert square-shaped timbers there and attach themby means of adhesive tape.

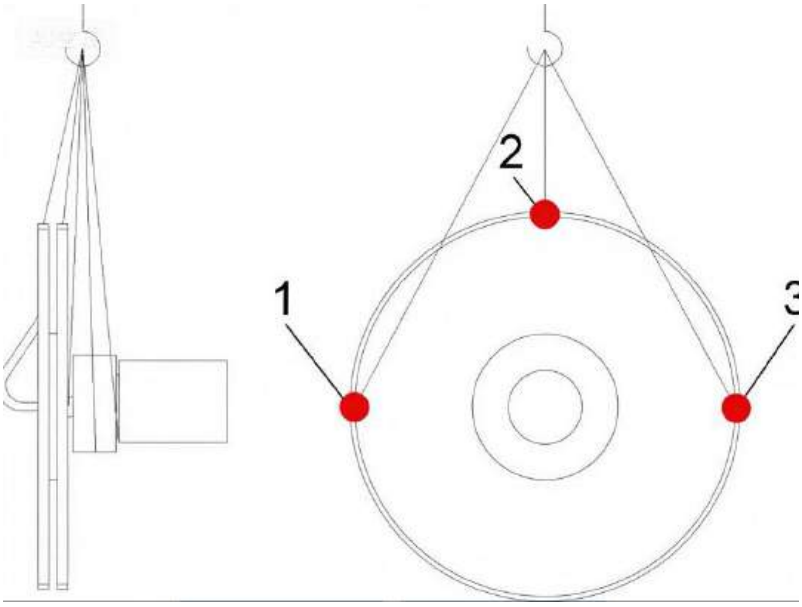

Figure 5-7 Transport–Charging cable reel (illustrated example)

Fixing:Prior to installation please check the foundation on which the Charging cable reel shall be installed.Dimension sand attachment hole shave to correspond to the foundation plan. The dimensions of the foundation for the Charging cable reelareindicated on thedimensional drawing of the Charging cable reelwhich youhave in hand.

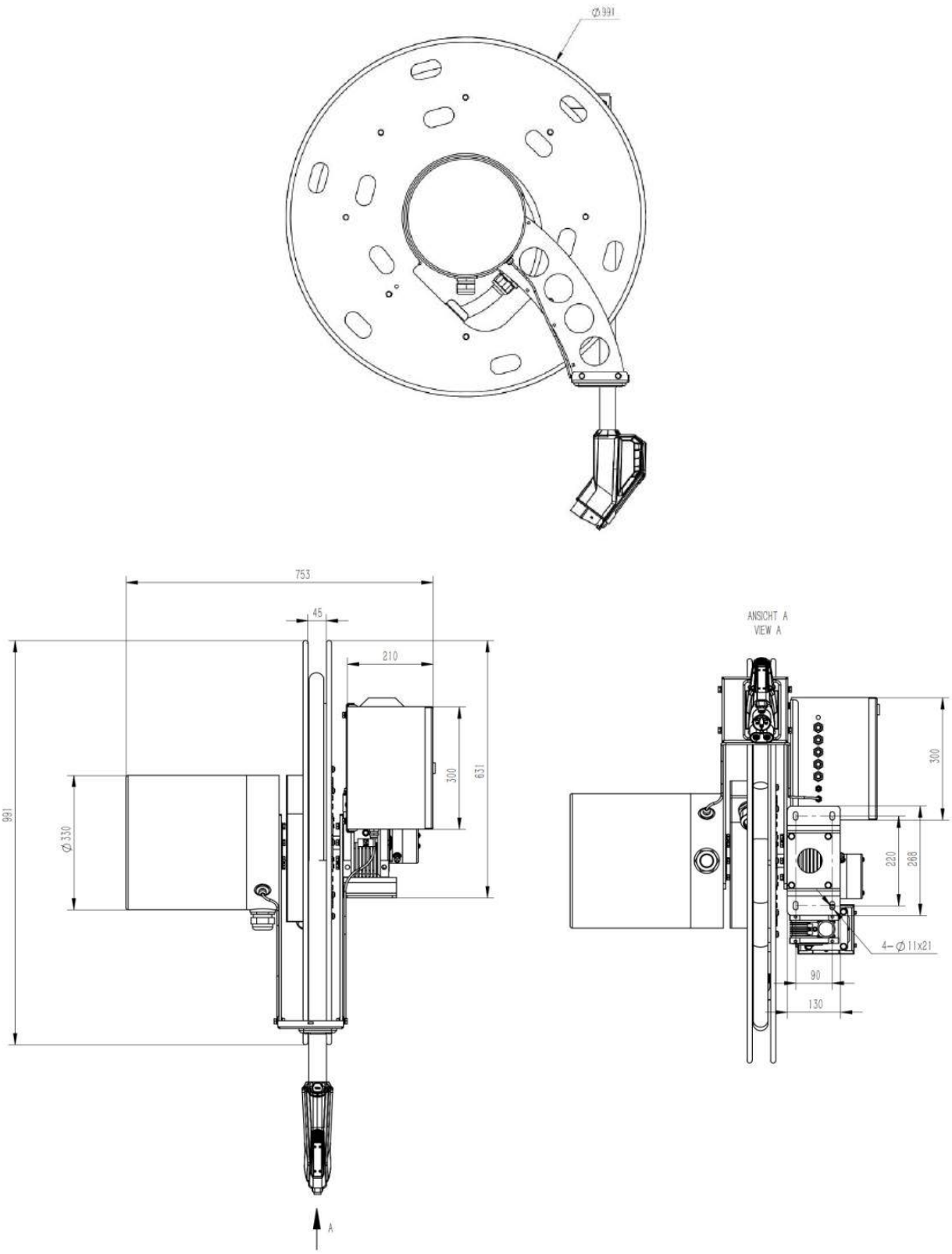

Figure 5-8 Installation of Charging cable reel

5.8 Charge controller installation

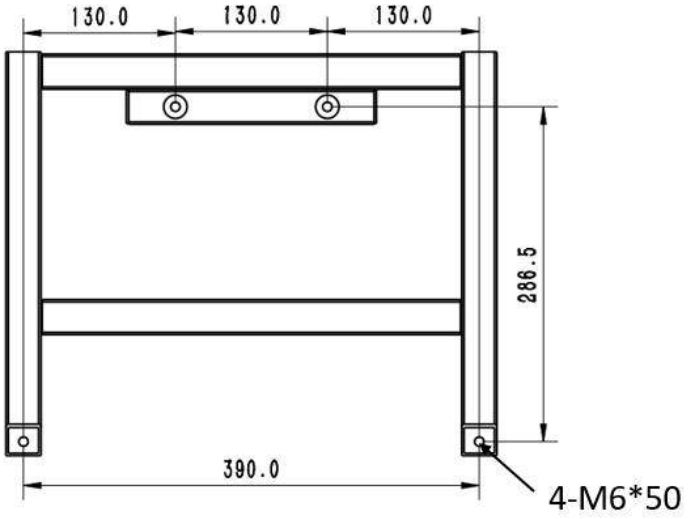

Figure 5-9 Mounting position of Charge controller installation

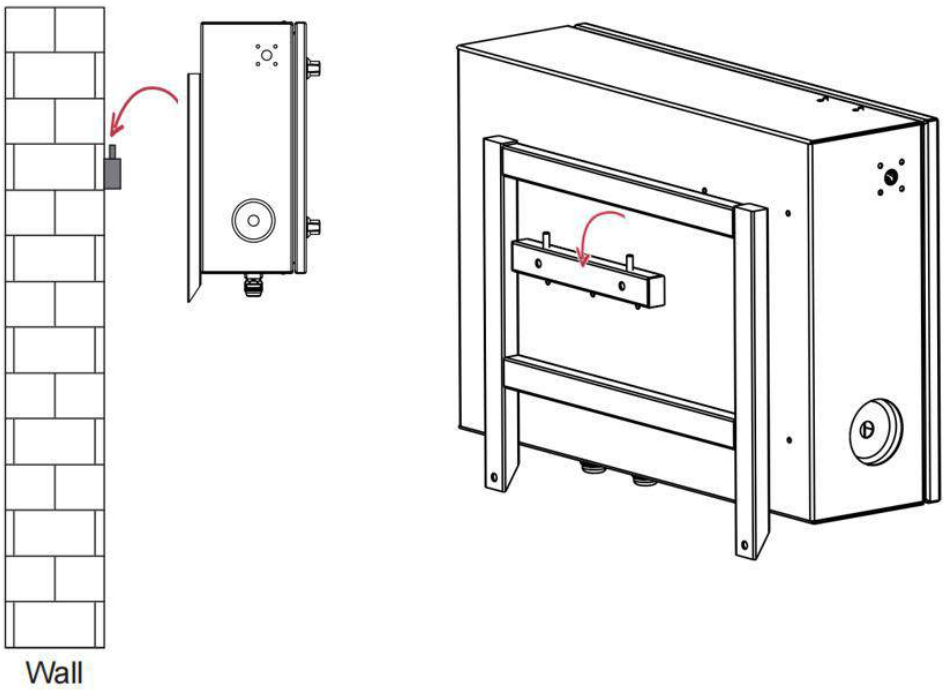

Figure 5-10 Installation of Charge controller installation

5.9 Electrical installation

5.9.1 Electrical schematic diagram

The following figure shows the schematic of the dispenser.

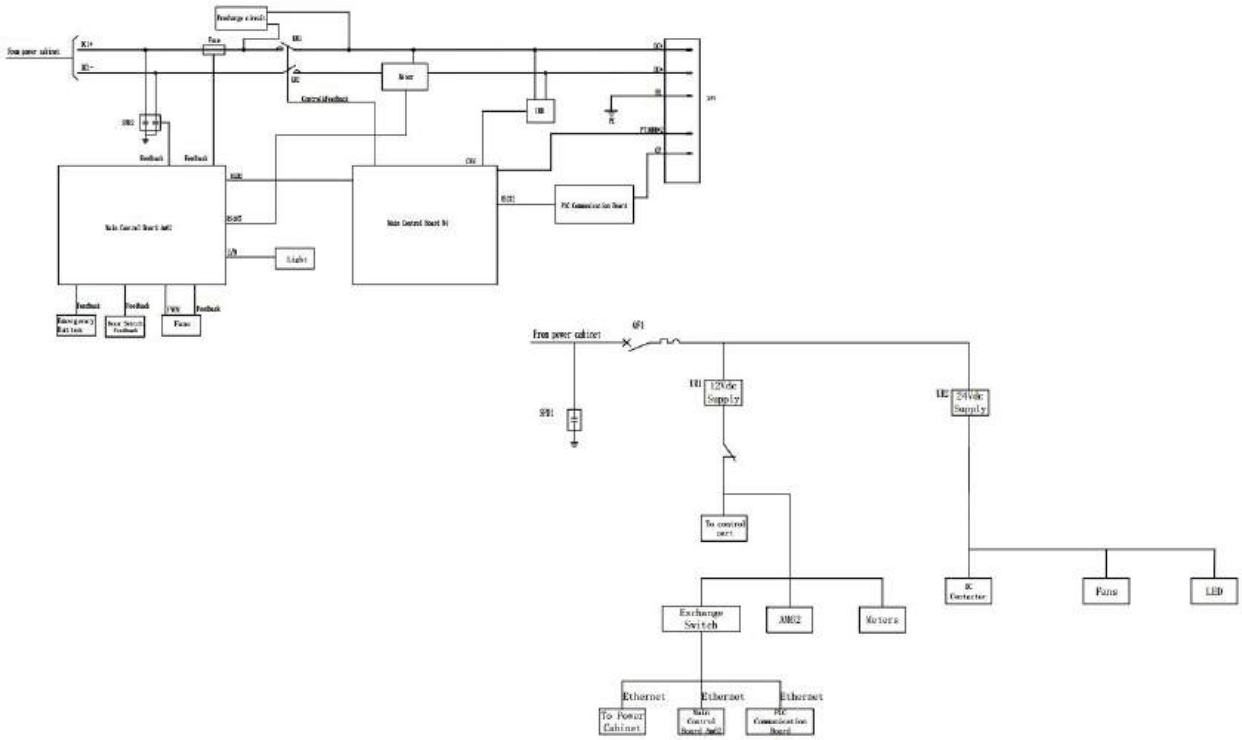

Figure 5-8 Electric schematic of the dispenser

5.9.2 Cable wiring

During wiring and connections, care should be taken to avoid scratching or damaging the cable insulation to prevent short circuits.

Follow the steps below to do the cable wiring.

5.9.2.1 Dispenser Cable wiring

1.拆下底部进线钣金，并打孔安装与 DC+,DC-与 PE 线缆对应的格兰头

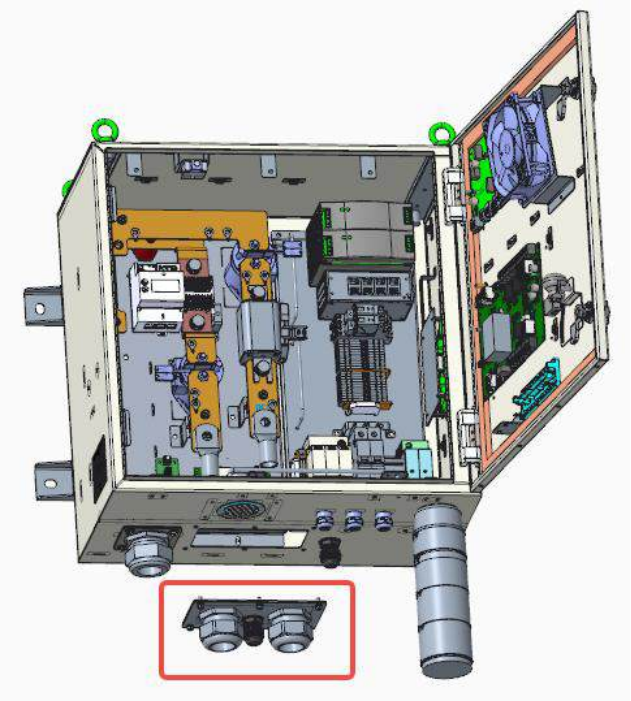

2. DC+与 DC-线缆穿过格兰头并压接铜鼻子，铜鼻子以 50Nm 的扭矩紧固。

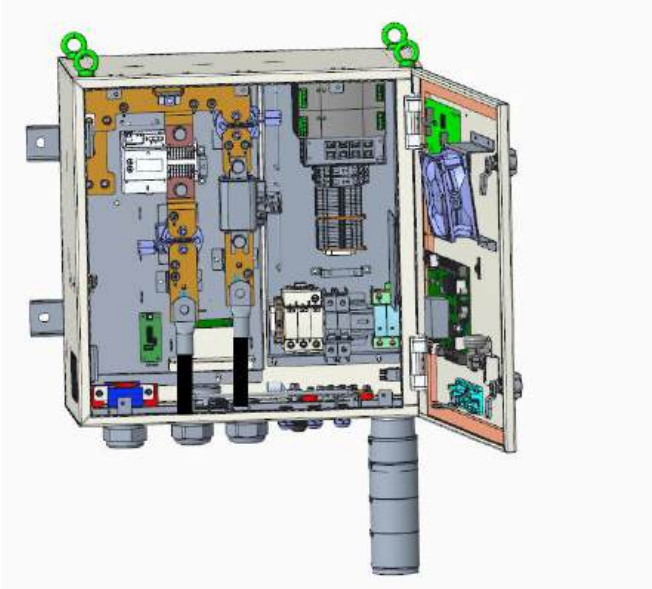

3.PE 线穿过格兰头并压接铜鼻子，铜鼻子以 10Nm 的扭矩紧固

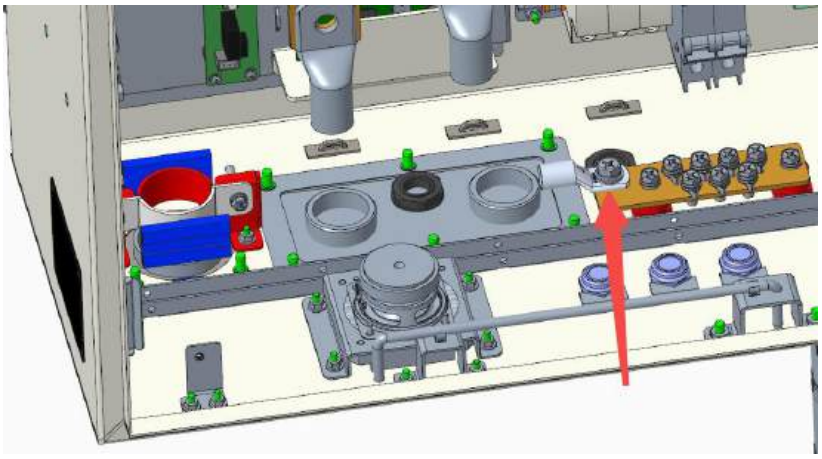

4.交流进线和网线穿过终端自带的格兰头,并压接针形端子和水晶头

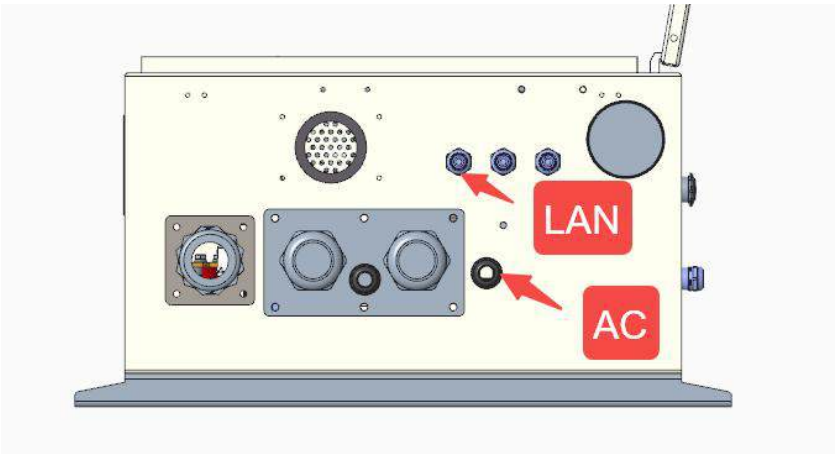

5.交流进线接法如下

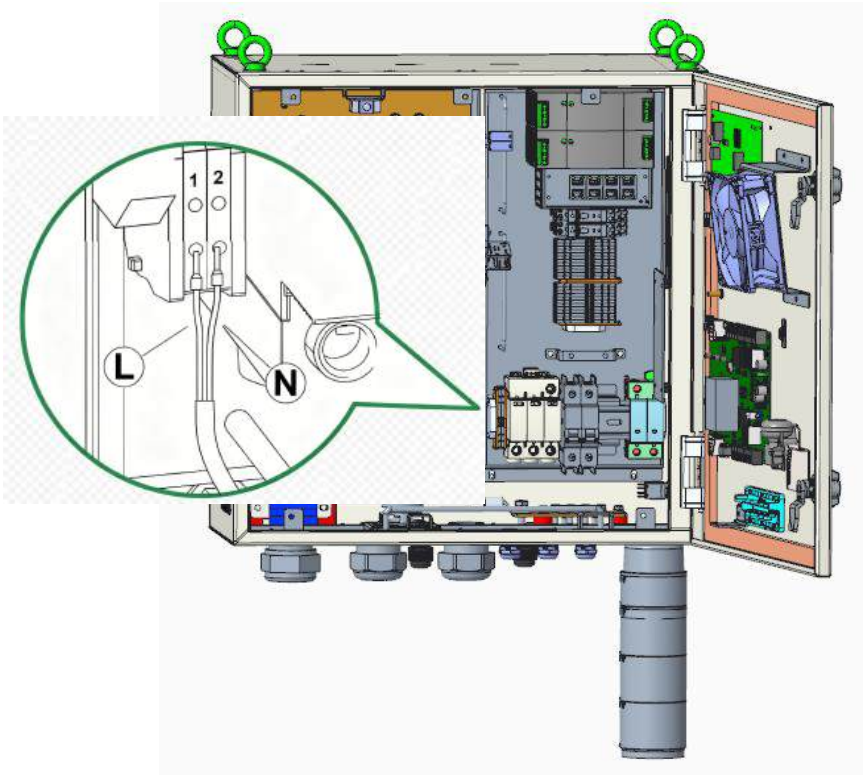

6.网线进线接法如下，共两根，一根为客户进线，一根为卷线盘网线进线

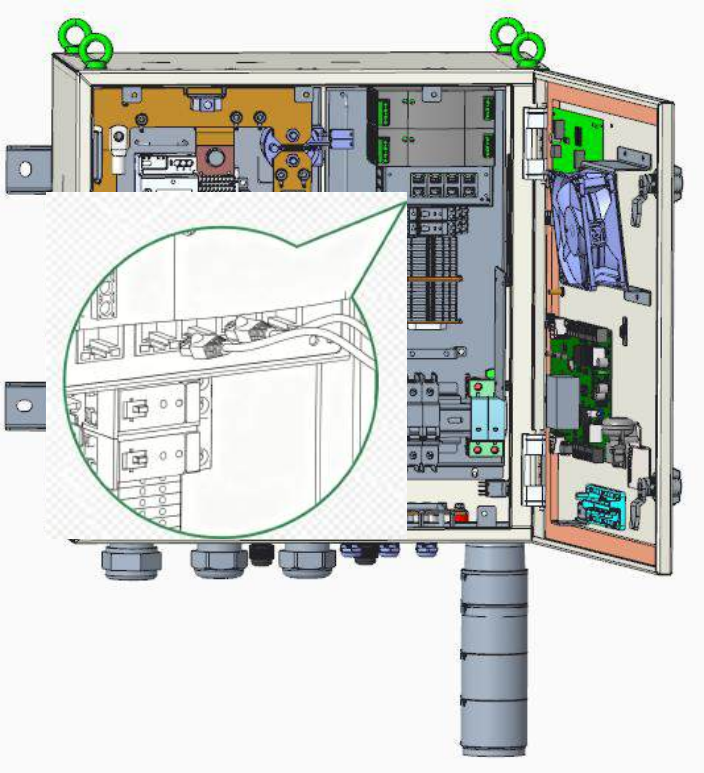

7. 来自卷线盘的充电枪线接法如下

1. 穿过最左侧格兰头
2. 2.将 4 个端子以 10Nm 扭矩固定在铜排上，注意区分正负极
3. 插接枪线信号线连接器

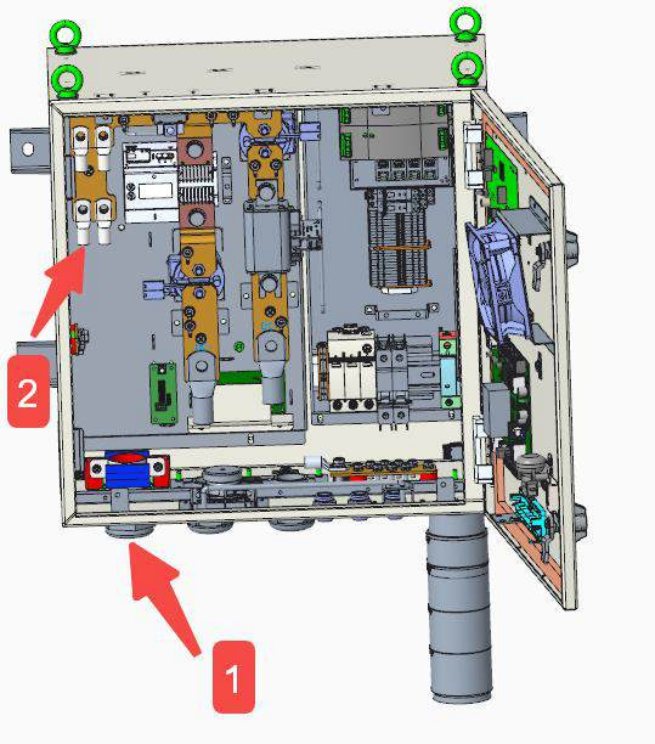

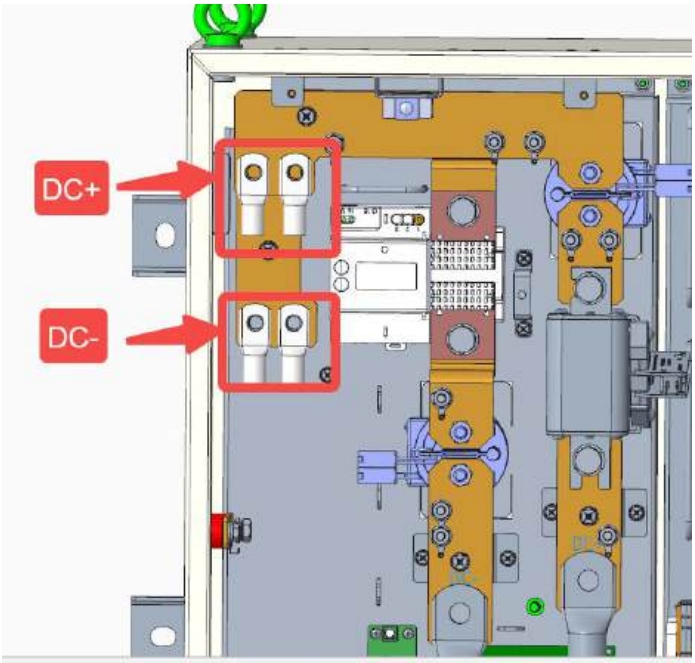

5.9.2.2 Dispenser Cable wiring

1.底部网线 AC 线和 PE 线先穿过格兰头进线，后压端子或水晶头

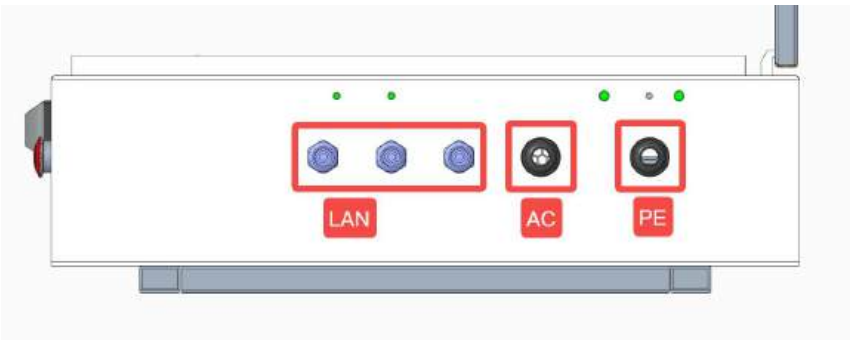

2.将网线 AC 线和 PE 线接线到对应位置，P 线铜鼻子以 10Nm 的扭矩紧固

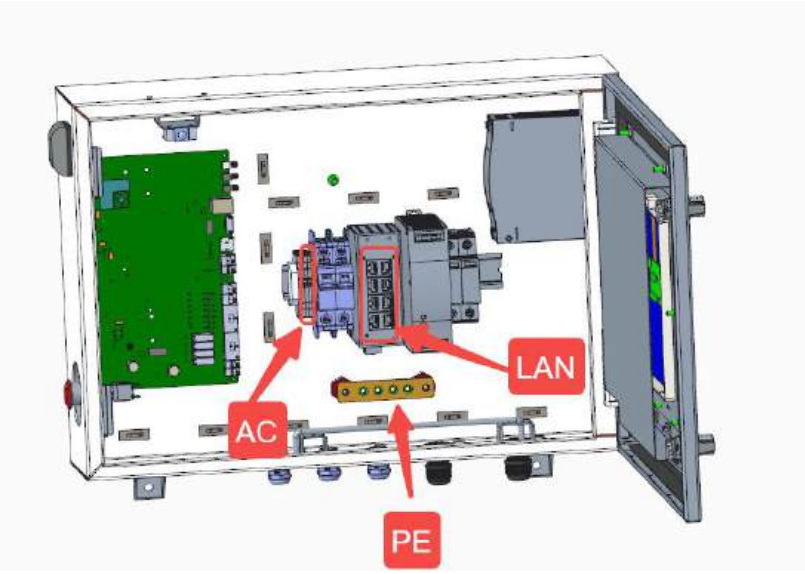

5.10 Check after installation

5.10.1 Installation and wiring check

Before the EVSE is turned on, only authorized personnel should inspect it. This section describes what to look for when inspecting the EVSE and its mounting:

- The EVSE should be clean and tidy, without any dents or damage. It should also be firmly attached to the base and not wobbly.
- The EVSE should be installed in the correct orientation, and all parts should be present. The installation should also be level.
- The cables should be laid and connected correctly.
- The insulation on the cables should not be scratched or damaged.
- The power cable terminals should be tight, and the communication cable terminals should be correct and not loose.
- There should be no hanging cables, and the bending radius of the cables should meet the requirements.
- The ground wire should be connected to the grounding grid for the device.

5.10.2 Check before power on the EVSE

- Short circuit check: Make sure there is no short circuit between the three phase wires, the neutral wire, and the ground wire in the power cable of the low-voltage distribution cabinet that is connected to the EVSE.
- Power voltage check: Make sure the power voltage at the top of the MCCB in the low-voltage distribution cabinet is normal. There should be no problems such as missing phases, overvoltage, undervoltage, or incorrect phase sequence.

5.10.3 Check on power-on

The EVSE can only be turned on after all the wiring is complete and correct. Here are the steps to turn on the EVSE:

(1) Close all MCCBs in the upstream power distribution cabinet.

(2) Measure whether the voltage of the output terminal of the MCCBs in the power distribution cabinet is 400 Vac (±10%).

(3) Measure whether the voltage of the inlet AC copper busbars in the EVSE are approximately 400 Vac (±10%).

(4) If the above conditions are met, power on the EVSE.

5.11 Completion information

Number	Name	Number of pages	Document Necessity
1	Unpacking record sheet	1	Required
2	Pre-installation checklist	1	Required
3	Post-installation checklist	1	Required

Table 5-1 Completion information

5.12 Appendix

Appendix 1 Unpacking Record Sheet

Unpacking Record Sheet					
Name of owner			Unpacking date		
No.	Case	Name of goods	Quantity	Acceptance	Notes
Unpacking conclusion					
Signature block	Installation unit			Owner unit	

Appendix 2 Pre-installation Checklist

Pre-installation Checklist				
Project name:				
Civil construction unit:		Equipment installation unit:		
Sub-project	SN	Main acceptance items	Acceptance record	Treatment measures
Installation plan	1	Whether the on-site equipment installation plan complies with the construction plan design drawings.		
Distribution cabinet MCCB	1	Meet the equipment installation requirements in “Installation Manual” for power cabinet.		
Maintenance distance	1	The maintenance distance meets the equipment spacing requirements in Chapter 5.2.		
Cable type	1	The cable meets the requirements in Chapter 5.3.		
Concrete foundation	1	The concrete foundation meets the requirements in Chapter 5.4.		
In conclusion:				
Note: (1) In the acceptance record, fill in "√" or "×" according to the on-site situation. (2) At the conclusion, fill in "qualified" or "need to rectify" according to the on-site situation.				
Signature of person in charge of inspection: _____ Date:				

Appendix 3 Post-installation Checklist

Post-installation Checklist			
No.	Checking items	Checking result (Y/N)	Note
1	Installation levelness is qualified		
2	The appearance is clean and tidy without bumps or damages		
3	All the parts /screws/bolts are fixed firmly without looseness and no parts missing		
4	No insulating layer of cable is scratched or damaged		
5	The phase sequence of the power cable wiring is correct		
6	The wiring terminals and screws are tightened without looseness		
7	The upstream main circuit breakers (MCCBs) meet the requirements		
8	No abnormality in the upstream power grid voltage		

6 Commissioning

6.1 Prerequisites

Before you start commissioning the charging System:

- Make sure you have read and understood all the safety instructions (refer to Chapter 2).
- Please prepare the debugging tools as per the appendix 4 of this chapter.
- Follow each step carefully while wearing the right safety gear, such as insulated shoes and gloves.

- Only authorized personnel should commission the EVSE, in accordance with local laws and regulations. StarCharge is not responsible for any losses caused by unauthorized commissioning by third-party personnel.
- Commissioning must be done carefully following the procedures. If any operation cannot be completed, stop until the cause is found and fixed.
- Do not commission the EVSE in severe weather conditions such as rain, snow, or sandstorms.
- During commissioning, the personnel must not leave the site while the door is open. The personnel must warn other people of the danger and prevent third parties from being curious and accidentally getting electrocuted. When leaving the site, make sure that all charger doors are closed and locked.

6.2 Commissioning flowchart

The commissioning flowchart of this EVSE is as follows:

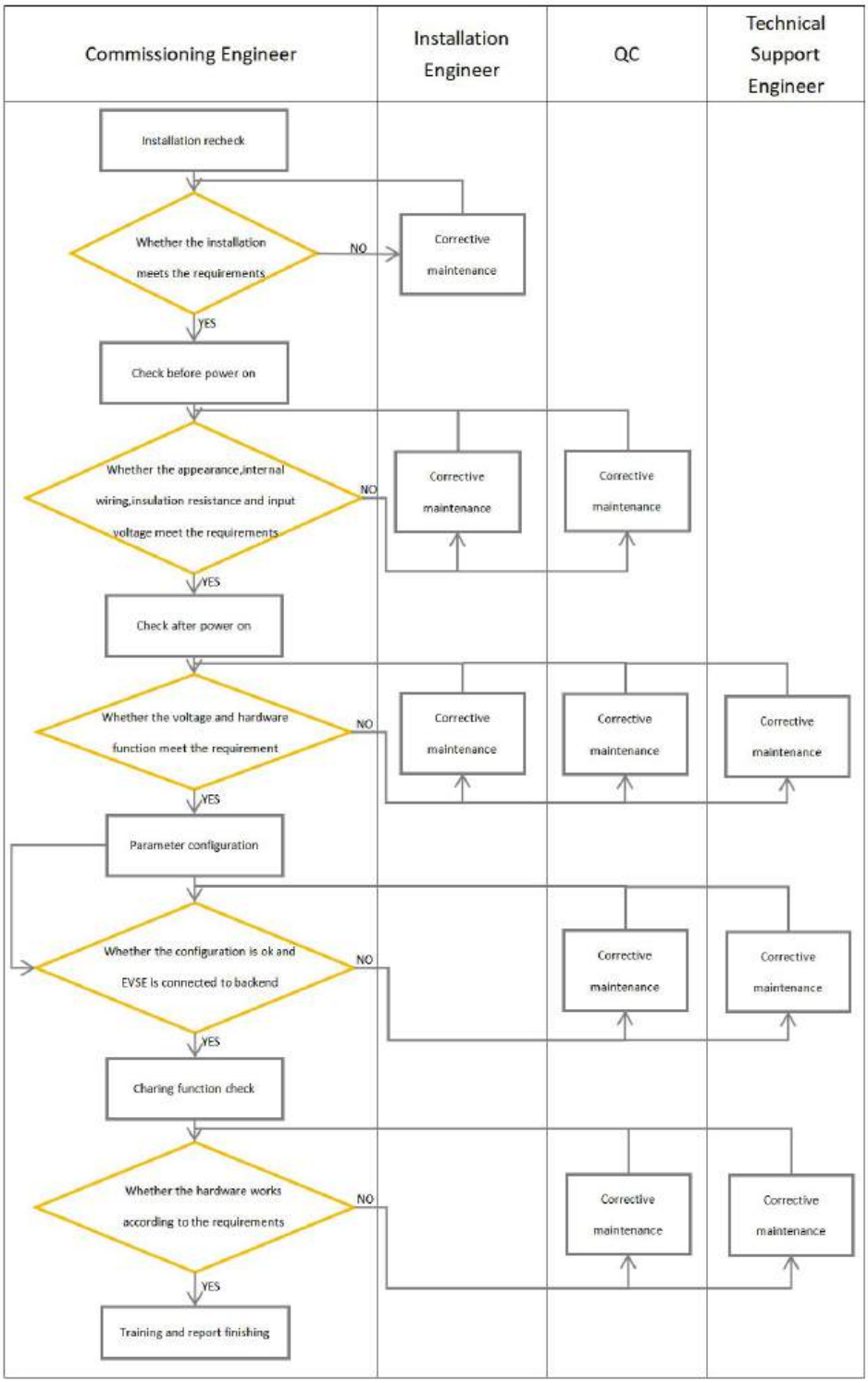

Figure 6-1 Commissioning flowchart

6.3 Installation recheck

Before commissioning the EVSE, make sure the following meet the installation requirements. Complete all the checkpoints and record any items that do not meet the requirements in Appendix 1 Post-installation Checklist.

- Check the equipment spacing (Refer to chapter 5.2 of the Installation Manual).
- Check the cement foundation (Refer to chapter 5.4 of the Installation Manual).
- Check the input voltage and current, and the distribution capacity (Refer to chapter 6.1 of the Installation Manual).
- Check the cables and cable wiring (Refer to chapter 2 of the Wiring Guide Manual).

6.4 EVSE power on and check

6.4.1 Pre-power-on check

6.4.1.1 Visual check

Complete all the checkpoints and record all the items that do not meet the requirements.

- Appearance:
  - Check whether the enclosure of the EVSE is clean and if there is any paint peeling, scratches, deformation, dents, cracks, or gaps.
  - Check whether the Lock (A), the LED light (B), Charging connector(C), Emergency Button(D), HMI(E), Card reader(F) are free of cracks and the frames are sealed without gaps.

Figure 6-2 Appearance check

Part	Name	Description
A	Lock	To lock the door of the dispenser or the control box.
B	LED light	To indicate the charging status of the dispenser.
C	Charging connector	To charging the EV.
D	Emergency stop button	To immediately stop charging of the dispenser.
E	HMI	To display the charging information.
F	Card reader	To identify the card.

- Nameplate: Check whether the nameplate is clear and intact, and the safety symbols are properly attached.
- Documents: Check whether the configuration information of the on-site EVSE conforms to the requirements of the contract, and if the accompanying documents are complete.
- Sealing:
  - Check whether the inlet hole of the Triton base is covered with sealant or sealing board.

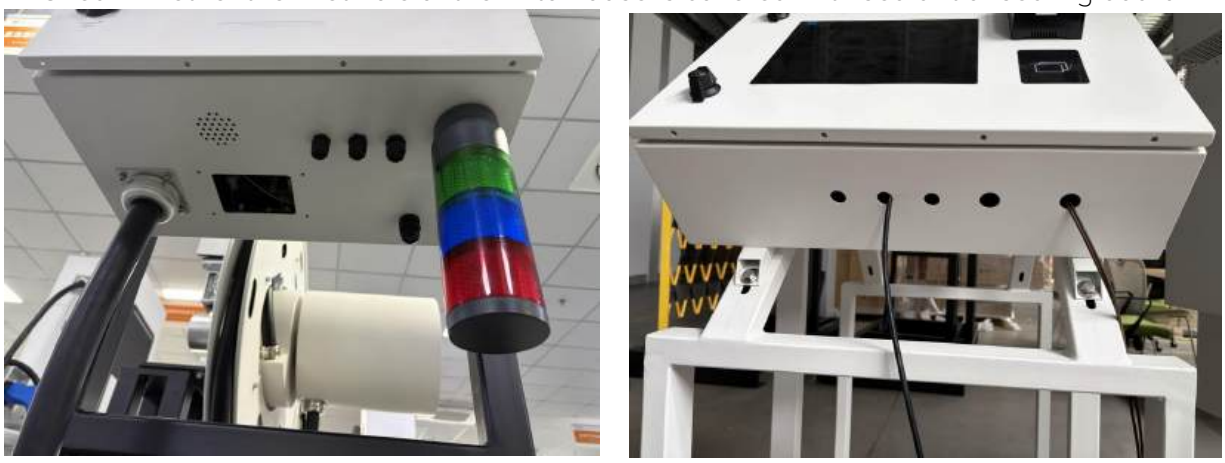

Figure 6-3 Sealing

  - Check whether the rubber seals of the door frame are free of falling off, deformation, and damage, and if the rubber seals can fully fit the door panel after closing.
  - Check whether the glands of the charging cables at the top of the user unit are sealed and not loose.
- Protection film: Check whether all the protective films of the EVSE have been removed, such as the films covering safety symbols, the touchscreen, the energy meter, and payment devices.

6.4.1.2 Environmental condition check

Refer to Chapter 6.1.4 of the Installation Manual for the environmental conditions that this EVSE

can operate in. Complete the checkpoints and record any items that do not meet the requirements in Appendix 3-3.2.

6.4.1.3 Internal cable inspection

In order to ensure the successful debugging and normal operation of the system, it is necessary to conduct a performance check of the cables before the debugging process begins.

- The inspection of the DC cable (Insulation Performance).
- The Inspection of the DC Cable (Verification of DC Cable Polarity).

Check the correctness of the polarity connection of the DC cables from the power cabinet to the user unit.

(1) Connect the DC positive pole of copper connector 1 in the power cabinet to PE copper busbar with a wire.

(2) Test the continuity between the DC positive input cable of connector A and PE copper busbar inside dispenser 1.

(3) It is normal if the DC positive input cable of connector A to the PE copper connector inside dispenser 1 is continuous. If the connection is not continuous on the dispenser side, it indicates an abnormal wiring. Please verify the DC cable.

Use the same method to check the correctness connection of each copper connector between the power cabinet and the dispenser.

Figure 6-4 Verification of DC Cables

- 480V AC cables check

Check whether the 480VAC cables inside the power cabinet and the user unit are properly connected and securely fastened.

Figure 6-5 Terminal inside power cabinet and user unit and control box

- Internet cable check

Check if power cabinet, user unit, control box and CMS Internet cables are properly inserted and Internet cables are workable. (Control box will be connected to one of the user unit based on real situation. Each CMS will be connected to the corresponding user unit)

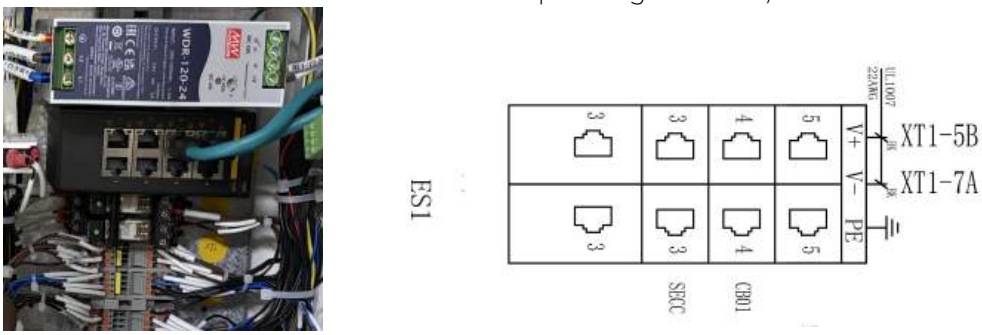

Figure 6-6-1 Switch inside user unit

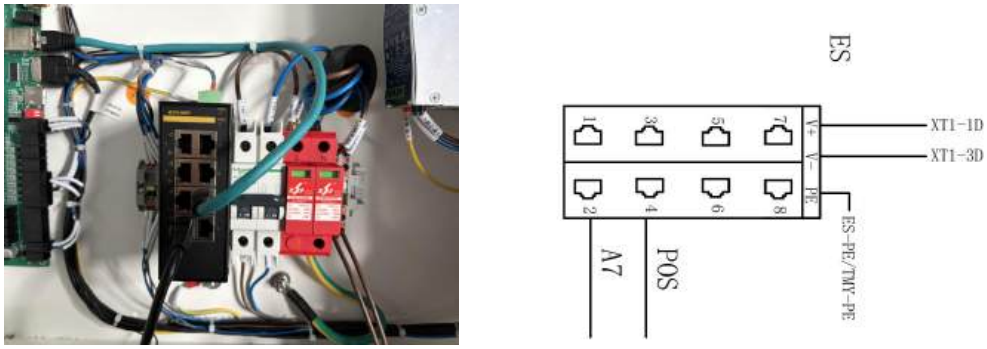

Figure 6-6-2 Switch inside control box

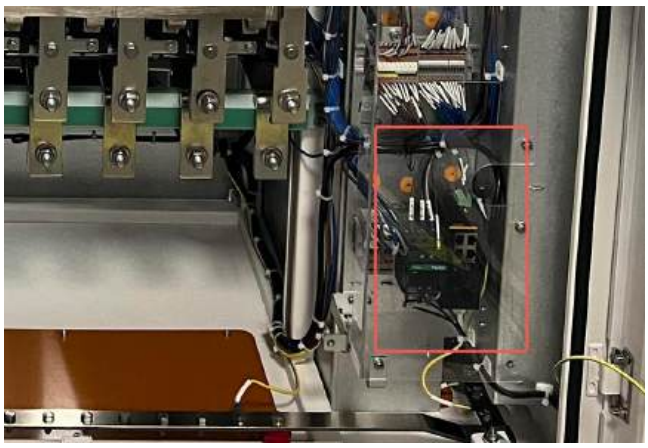

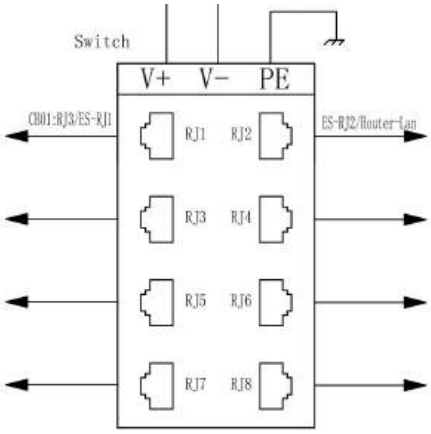

Figure 6-7 Switch inside power cabinet

6.4.2 EVSE Power on

You must follow these steps carefully to turn on the EVSE. Be careful of electric shock and wear protective gloves and shoes.

(1) Turn on the MCCBs in the power distribution cabinet that provide power to the power cabinet.

(2) Turn on the MCCBs in the power cabinet that provide power to the user unit.

(3) Turn on the RCCB inside EVSE.

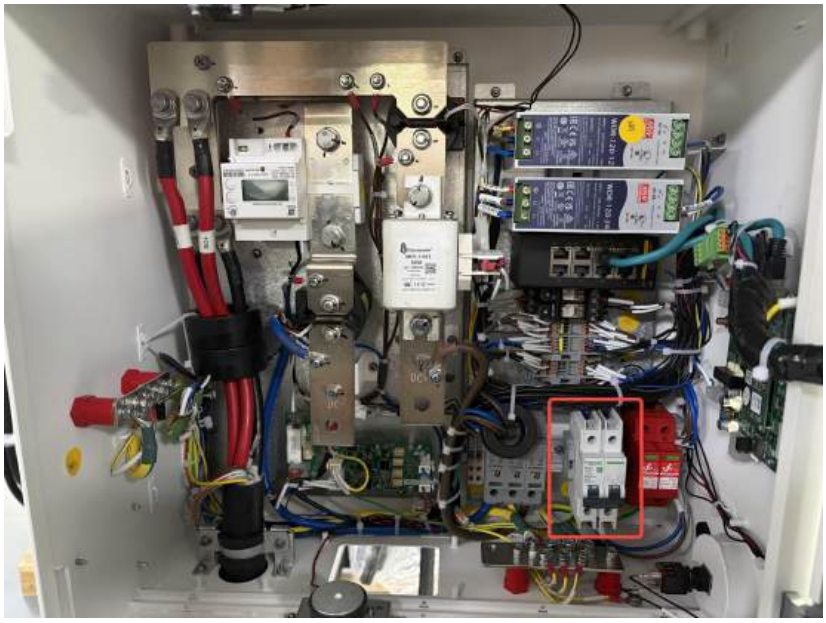

Figure 6-8-1 Turn on the RCCB inside user units

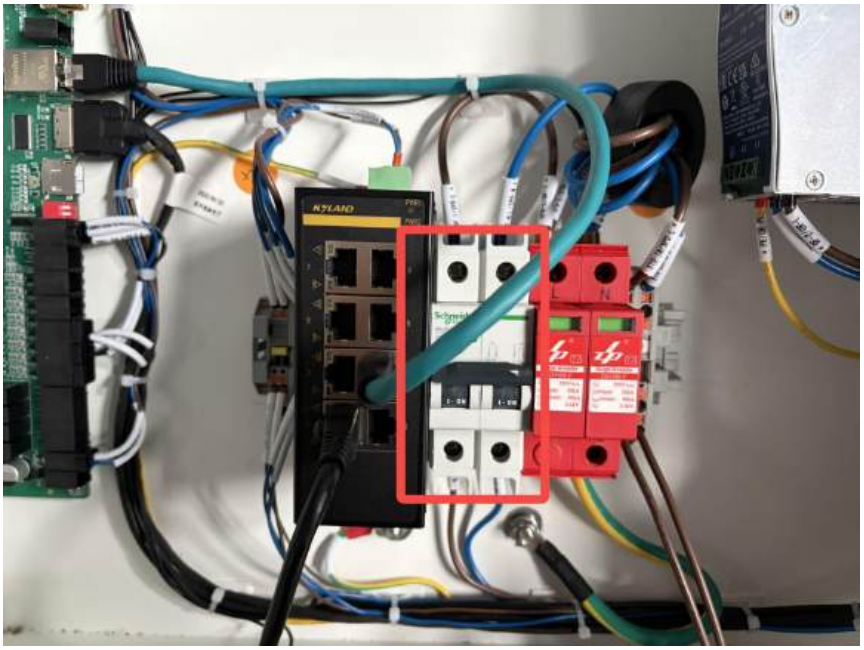

Figure 6-8-2 Turn on the RCCB inside control box

6.4.3 Recheck after power on

Check whether the following hardware functions meet the requirements.

- Voltage: Check that the output voltage of the main breaker inside the user unit is correct and that there are no faults, such as phase loss, overvoltage, undervoltage, or wrong phase sequence.
- Touchscreen: Check that the touchscreen displays normally, without any dead pixels, and that the words are clearly displayed. Make sure that the touchscreen is operating well with clear user interface (UI).
- LED status indicator: Check that the LED status indicator on the user unit functions well according to the design requirements.
- Power supply unit (PSU): The PSU can provide a stable voltage. Use an electrical multimeter to check that the output voltage of the PSU inside the user unit meets the requirements.
- Residual current circuit breaker with overcurrent protection device (RCBO): Press the "Test" button on the RCBO to check whether the device trips.

6.5 Laptop configuration

Only when the parameters settings are correctly completed after power on, the split system can communicate normally. Every part has the unique IP address. Therefore, there may be conflicting mailing IP addresses for individual parts before all the RealGun ID parameters are set, parameters need to be individually set for each user unit and the power cabinet.

(1) Disconnect the original Internet cable connected to the AM62 board and connect the laptop directly to the AM62 board inside the User unit #1 with a workable Internet cable.

Figure 6-9 Network port of AM62 board

(2) Change the IP address of the laptop to the following IP address 192.168.1.xxx; 192.168.88.xxx; 18.18.10.xxx (Detailed below). NOTE: Do not use xxx=205or 206 as it is the default IP address of the Charging Station (suggest using **199**). Set the subnet mask IP to 255.255.255.0

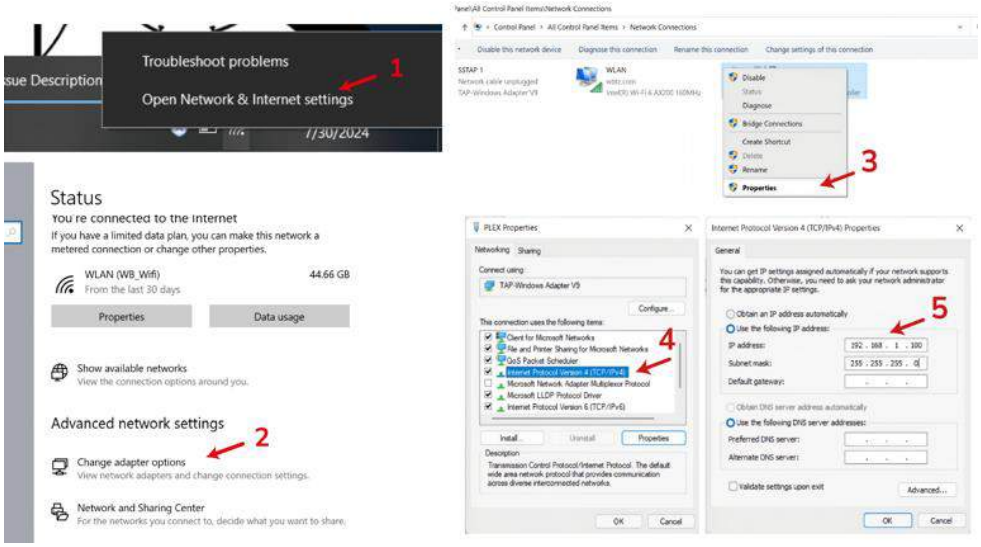

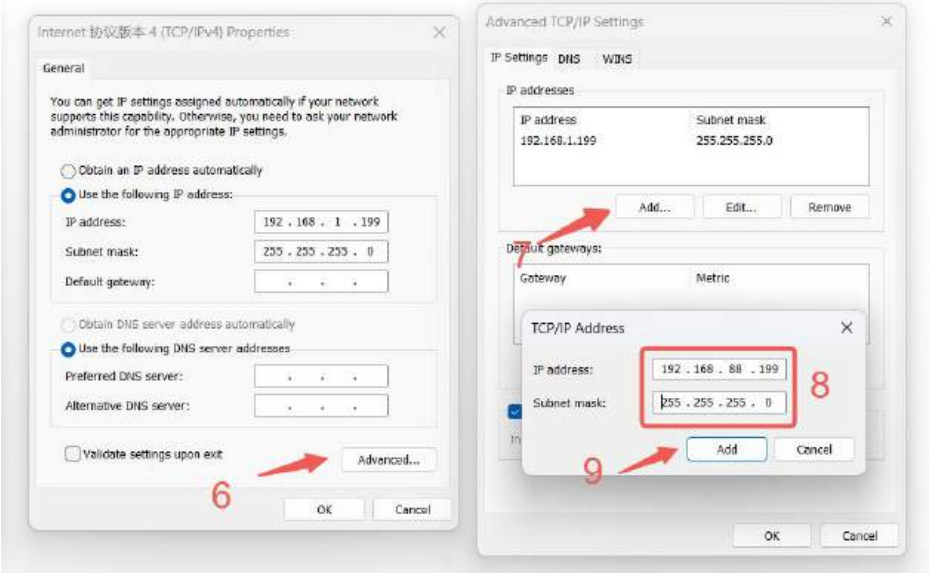

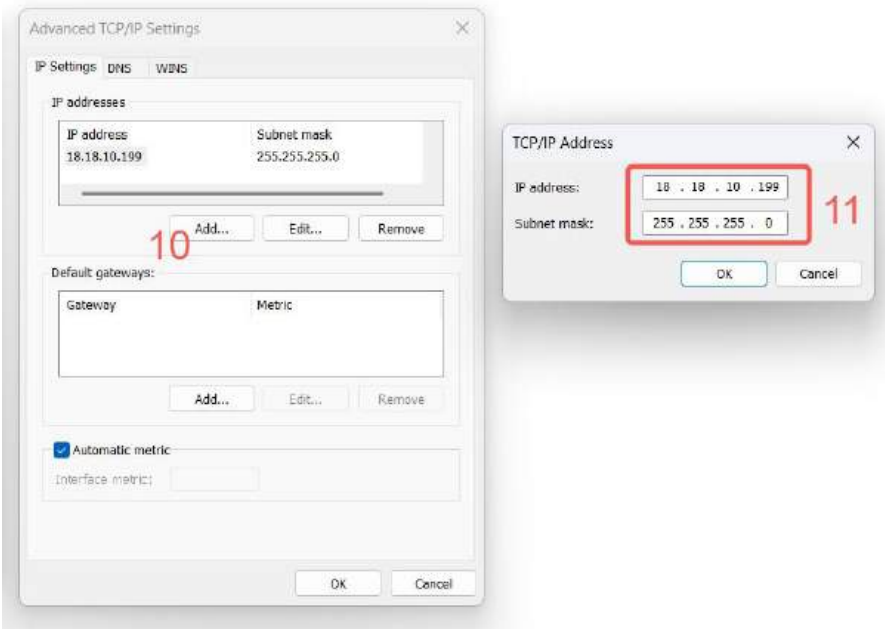

Figure 6-10 Configure the IPV4 of the laptop

6.6 Login web UI with the preset password

(1) On the computer web browser, type in website address"192.168.88.206" when laptop is directly connected to the AM62 board. The commissioning tool login page should appear.
Note: A security message might appear: "Connection not private", click advanced and proceed to access the web server login page.

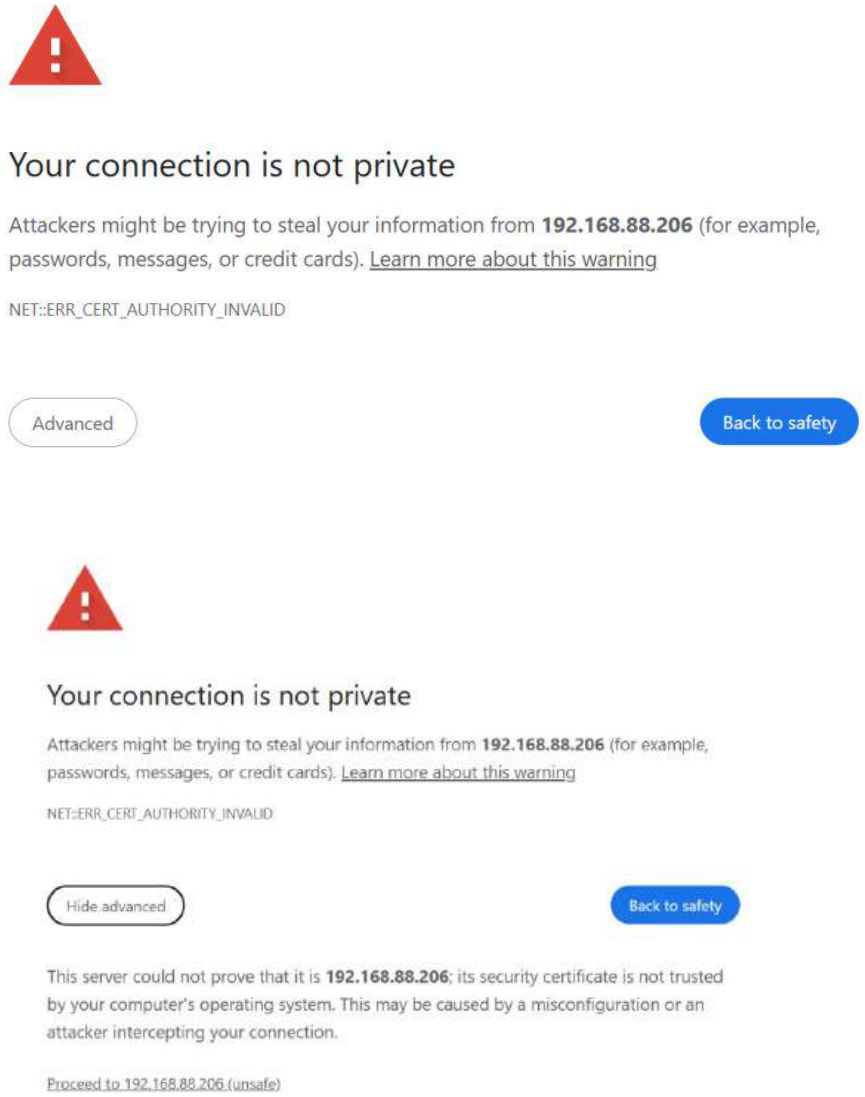

Figure 6-11 Login to the Web UI

(2) Click Advanced-Continue to 192.168.88.206 (unsafe)

(3) At the first connection on site, please enter the factory default password.:

- Username: Admin.
- Password: WBdh26835941. ; please note that the password ends with a dot.
- Click Login.

If the AM62 board is re-updated via the SD card (Require product model number, contact StarCharge service team for configuration), the initial login password is: 1234. After logging in, it is recommended to change the password to: **WBdh26835941.** ;please note that the password ends with a dot.

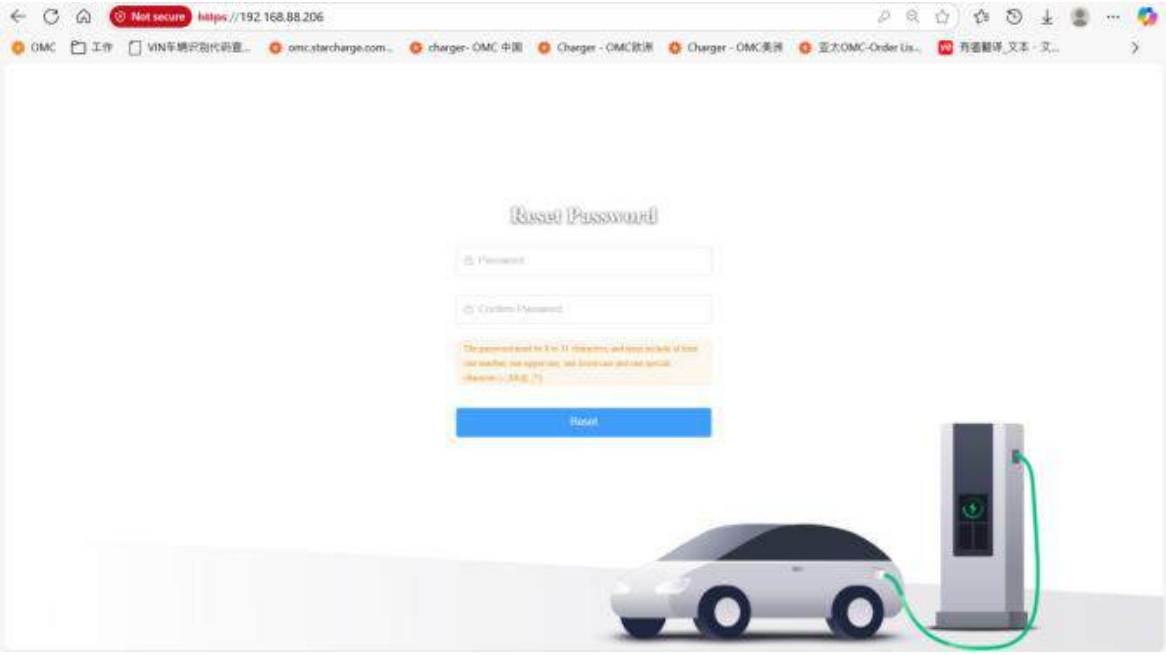

Figure 6-12 Reset the password

(4) After creating the new password, the web server system status screen should appear.

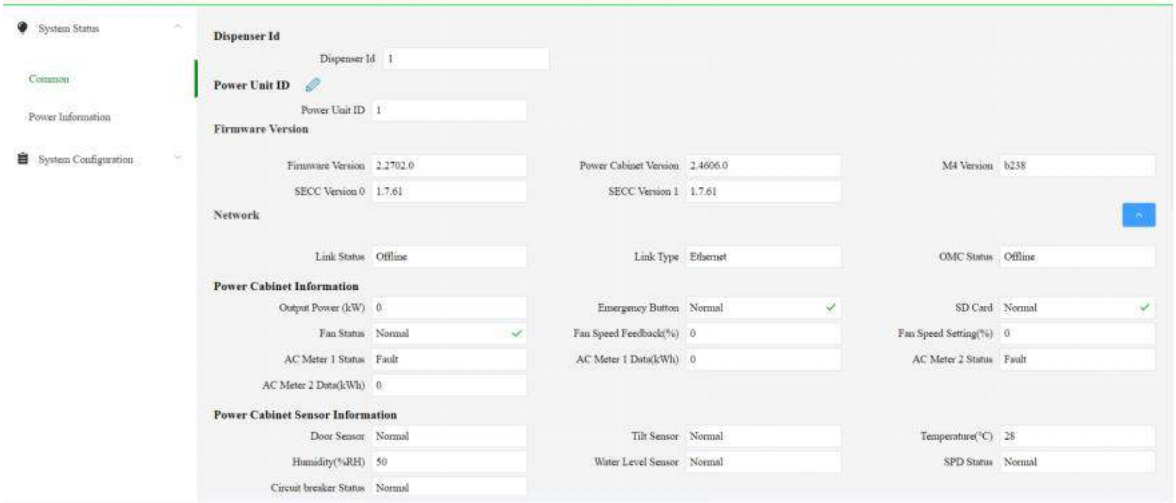

Figure 6-13 Successful login to the webUI

(5) You can change the language of the commissioning interface.

(6) You can log out.

6.7 The unique IP address setting of the user unit

6.7.1 RealGunID configuration (Important)

The communication between the power cabinet and the user units is established via Ethernet. Therefore, each user unit must have a unique IP address to avoid address conflicts. This chapter mainly explains how to set the parameters so that the IP address of each user unit becomes unique. The Split System Dispenser charging connectors RealGun ID are based on how the DC cables are connected to Power Cabinet copper Busbar. After Real ConNum is configured, the IP address of the dispenser web will change to 192.168.1.1XX (XX = smaller Real ConNum). This parameter setting is strongly related to Chapter 2 of the Cable Wiring Manual.

6.7.1.1 Complimented with NovaV4

The numbering of the copper Connectors in the power cabinet back door is as follows: 1、2、 3、4、 5、 6、 7、 8、 9、 10、 11、 12 (From right to left).

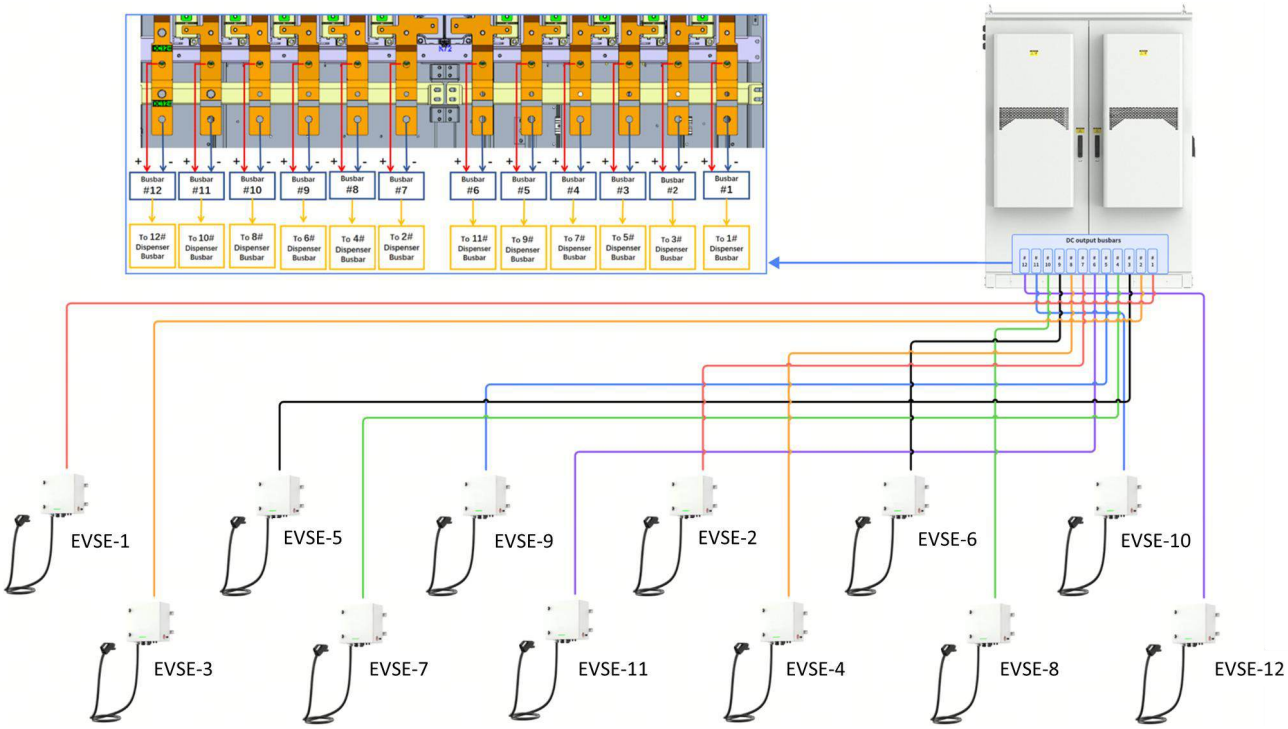

Figure 6-14 Numbering of the copper busbars in the power cabinet

(1) Navigation panel: System Configuration >> Basic Configuration >> RealGunID.

(Under **ConnectorID Mapping Enable** situation)Real ConNum **1** corresponds to User Unit Num [X] ,refer to the table below;

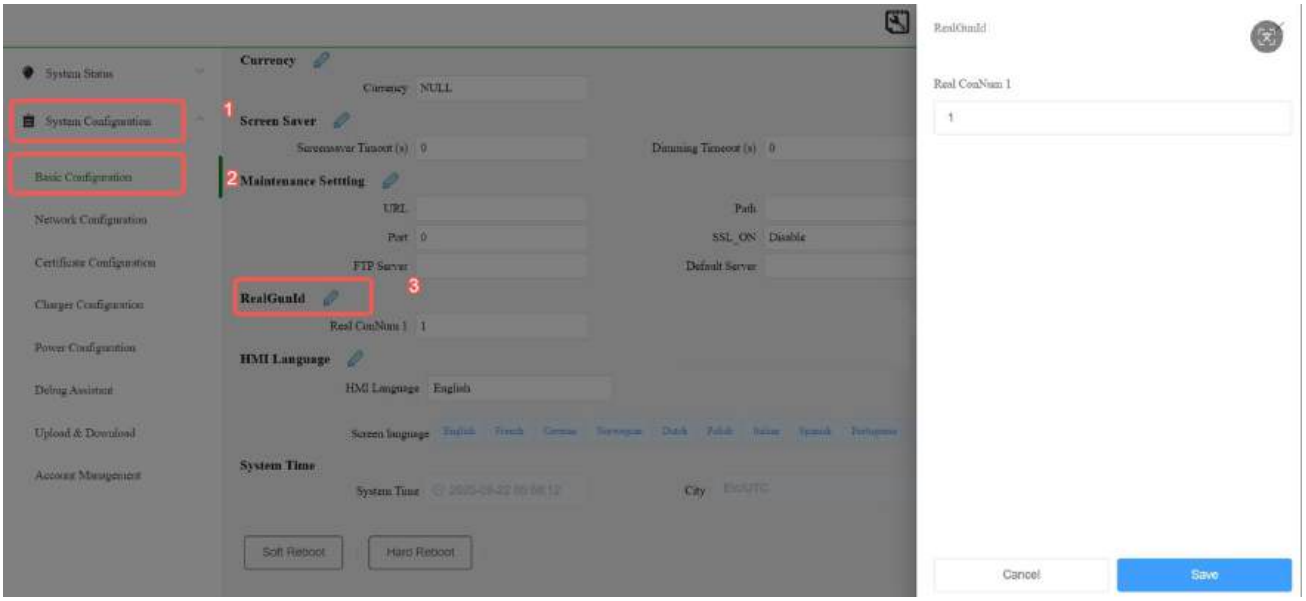

Figure 6-15 RealgunID Settings Guide

(2) Click Basic Configuration-RealGunID, RealGunID must be configured for each charging connector according to table below.

(3) The settings for RealConNum and the unique IP address generation rules are as follows.

User Units Num.	Busbar	Real ConNum1 Setting (ConnectorID Mapping Enable)	New IP address
#1	Busbar 1	1	192.168.1.101
#2	Busbar 7	2	192.168.1.102
#3	Busbar 2	3	192.168.1.103
#4	Busbar 8	4	192.168.1.104
#5	Busbar 3	5	192.168.1.105
#6	Busbar 9	6	192.168.1.106
#7	Busbar 4	7	192.168.1.107
#8	Busbar 10	8	192.168.1.108
#9	Busbar 5	9	192.168.1.109
#10	Busbar 11	10	192.168.1.110
#11	Busbar 6	11	192.168.1.111
#12	Busbar 12	12	192.168.1.112
Power Cabinet			192.168.1.136

Table 6-1 RealID Settings Guide and IP Correspondence

(4) After Dispenser #1 Real ConNum is configured, continue to directly connect laptop to other Dispenser's AM62 board and change the RealGunID.

(5) After all Dispensers Real ConNum are configured, reconnect all the Internet cable back to AM62 board and reboot all dispensers.

Attention:

Must enable **ConnectorID Mapping Enable** function in power cabinet web page (192.168.1.136).

1. Log in to 192.168.1.136 and go to System Configuration-Power Configuration and click the icon to edit

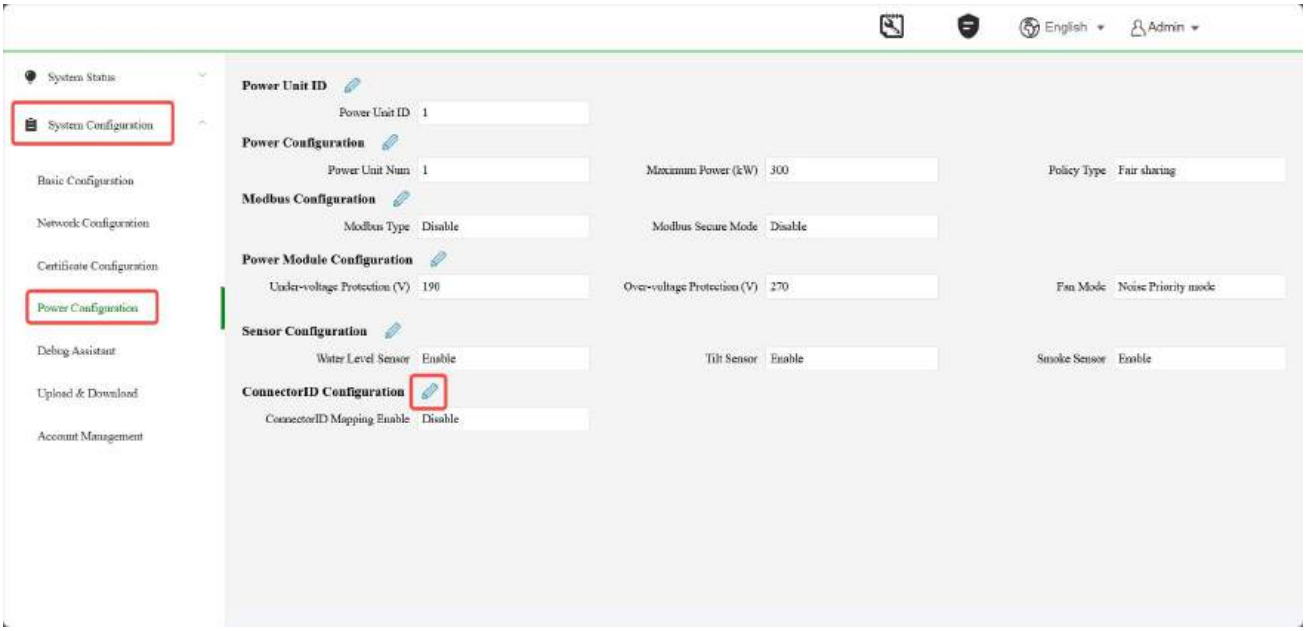

2. Enable the function and select Symtem gun num based on real situation

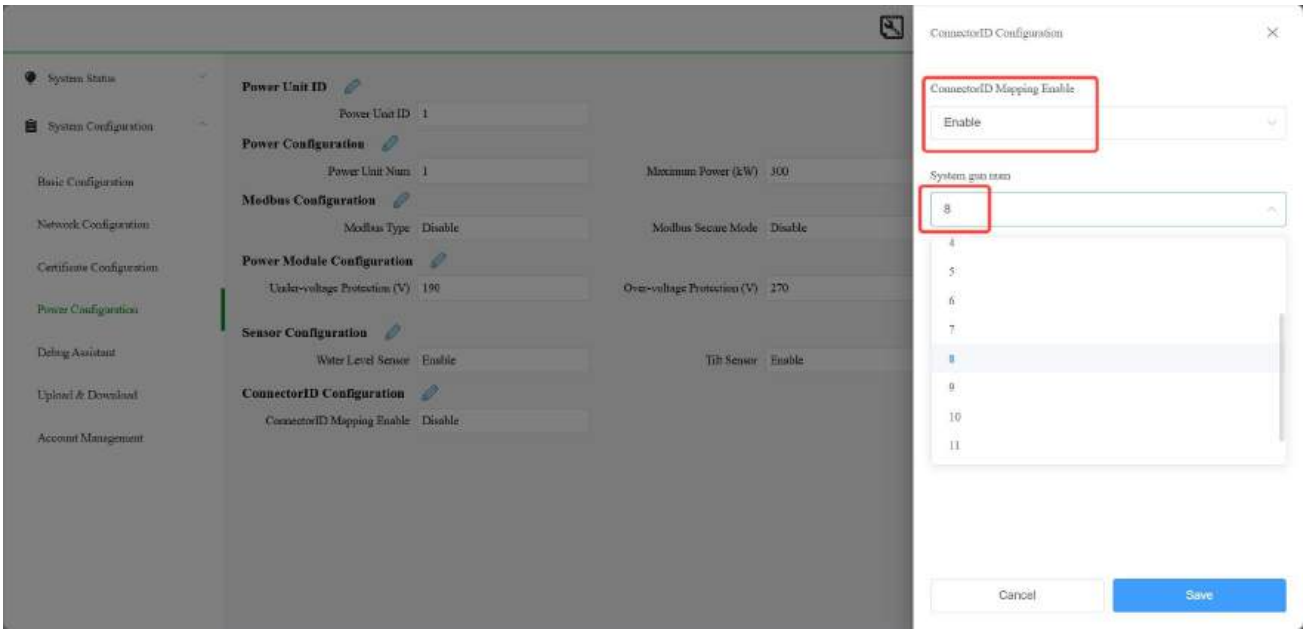

3. Click save button and check the if the configurations are correctly saved as figure below

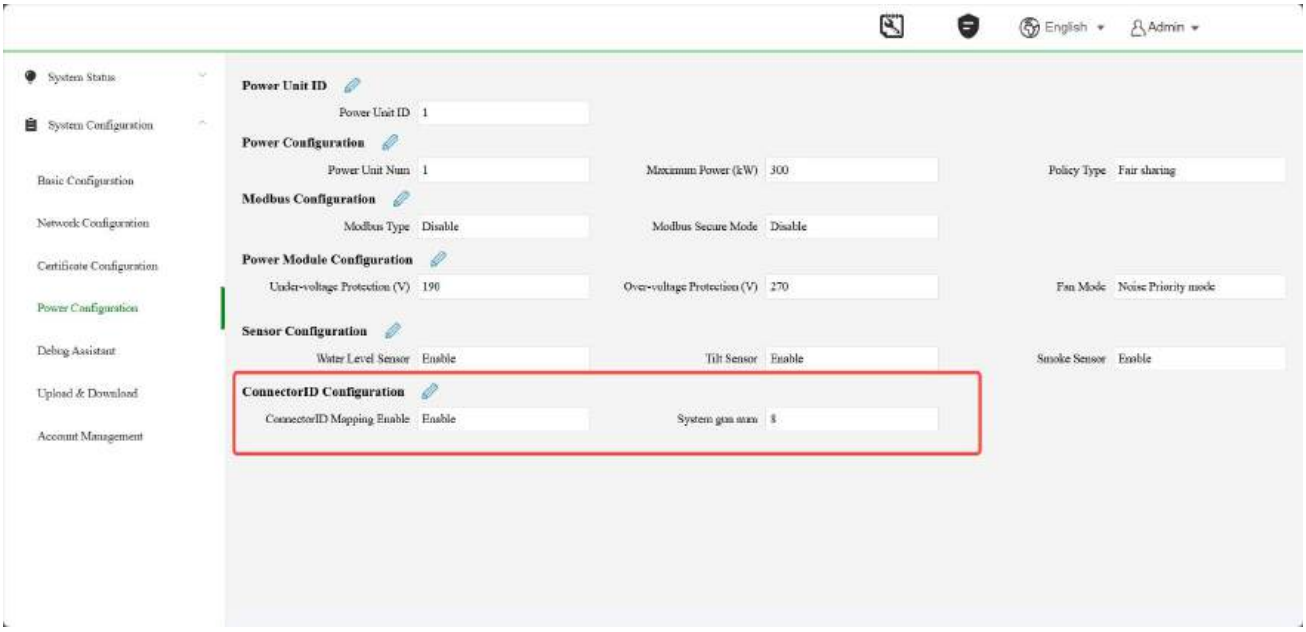

6.7.2 Login to the charger via the unique IP address

After setting all the RealGunID parameters for each user unit and completing the reboot, please log in to each user unit using its unique IP address. Since the split system power cabinet is independent and unique, the IP address of the power cabinet is always 192.168.1.136.

(1) Connect laptop to any Dispenser's switch empty port.

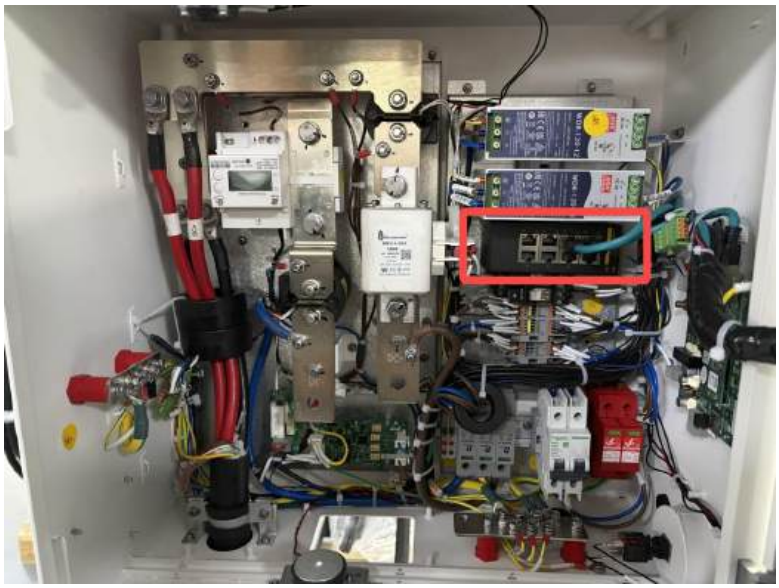

Figure 3-16 Connect laptop to any Dispenser's switch empty port

(2) Login to the user unit's Web UI with new IP address as shown below and keep the web open for next steps.

User Units Num.	Busbar	Real ConNum1 Setting	New IP address

#1	Busbar 1	1	192.168.1.101
#2	Busbar 7	2	192.168.1.102
#3	Busbar 2	3	192.168.1.103
#4	Busbar 8	4	192.168.1.104
#5	Busbar 3	5	192.168.1.105
#6	Busbar 9	6	192.168.1.106
#7	Busbar 4	7	192.168.1.107
#8	Busbar 10	8	192.168.1.108
#9	Busbar 5	9	192.168.1.109
#10	Busbar 11	10	192.168.1.110
#11	Busbar 6	11	192.168.1.111
#12	Busbar 12	12	192.168.1.112
Power Cabinet			192.168.1.136

Table 6-2 RealID Settings Guide and IP Correspondence

6.8 OCPP connection

Please refer to the power cabinet debugging manual for OCPP connection.
Configure OCPP configurations in Power Cabinet Web UI 192.168.1.136.

6.9 Introduction to the User Unit Web UI

6.9.1 Verify the status of the user unit

- Check user unit status

Before starting to modify the charging station parameters, it is recommended to check the different status of the equipment on the System Status page.
Navigation path: System Status > Common.

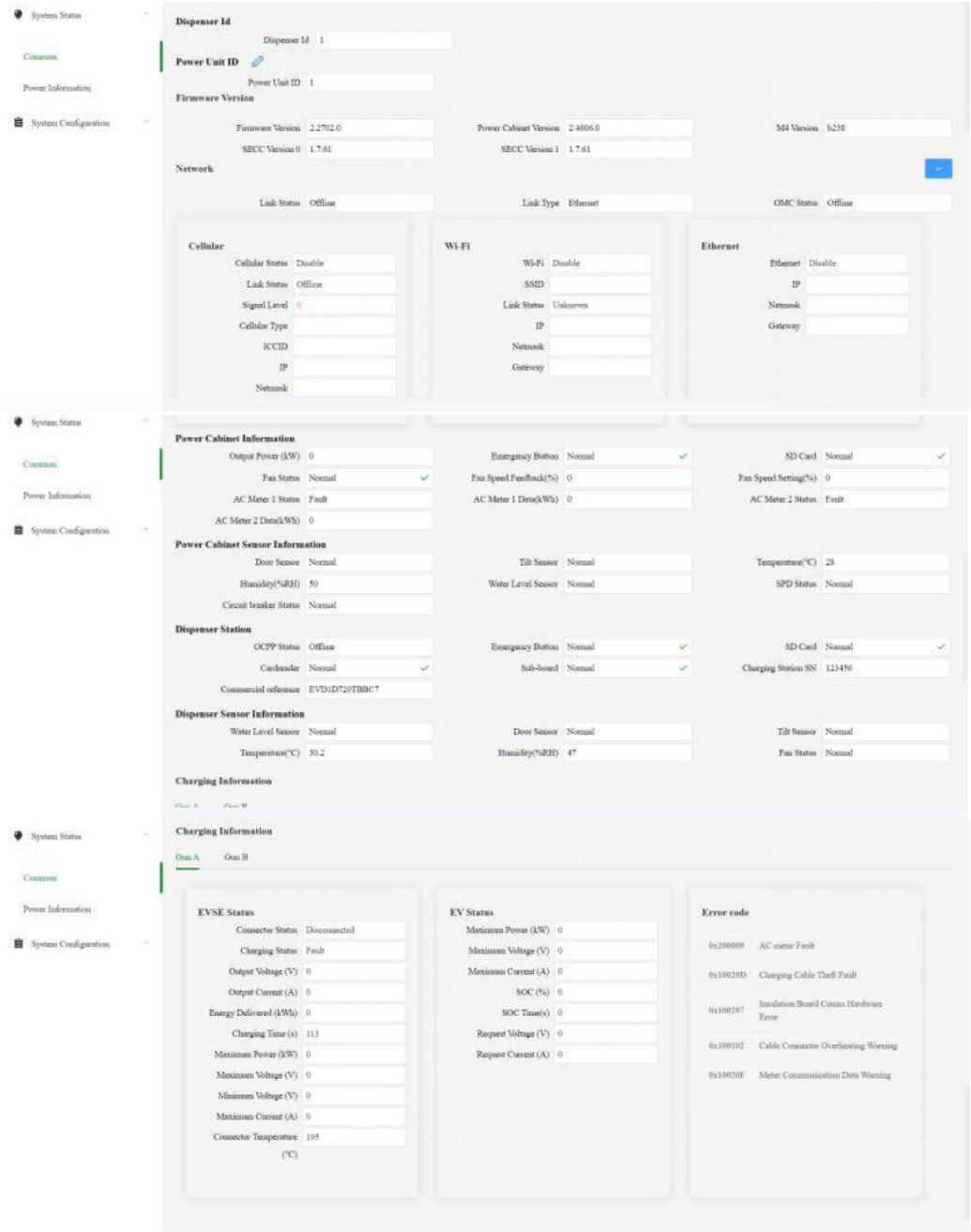

Figure 6-17 Status of the user unit

6.9.1.1 Firmware Version

Figure 6-18 Version of the user unit

Check the current firmware version is visible and check if it is the latest version

If it's not the case, update the firmware version (optional).

6.9.1.2 Network Status

Figure 6-19 Network status of the user unit

Displays the active Link Type: Wi-Fi, 4G or Ethernet. Check if the Link Status is online after it has been commissioned, it may be offline before commissioning.

6.9.1.3 Dispenser Station

Figure 6-20 Status of the user unit

- **OCPP Status:** Displays the connectivity status to the OCPP backend.
- **Emergency Button:** Displays the status of the Dispenser Emergency Button whether Normal or Fault. It should be in Normal status
- **SD card:** Displays the status of the SD card of Dispenser AM62 board whether Normal or Fault. It should be in Normal status
- **Cardreader:** Displays the status of the RFID card reader whether Normal or Fault. It should be in Normal status
- **Sub-board:** Displays the status of the M4 board whether Normal or Fault. It should be in Normal status
- **Charging Station SN:** Displays the Serial Number of this Charging Station matching its name plate
- **Commercial Reference:** Displays the Commercial reference of this Charging Station.

6.9.1.4 Dispenser Sensor Information

Figure 6-21 Sensor information of the user unit

- **Water Level Sensor:** Normal
- **Door Sensor:** Normal
- **Tilt Sensor:** Normal

- **Temperature (℃)**: Environmental temperature
- **Humidity(%RH):** Environmental humidity
- **Fan status:** Normal

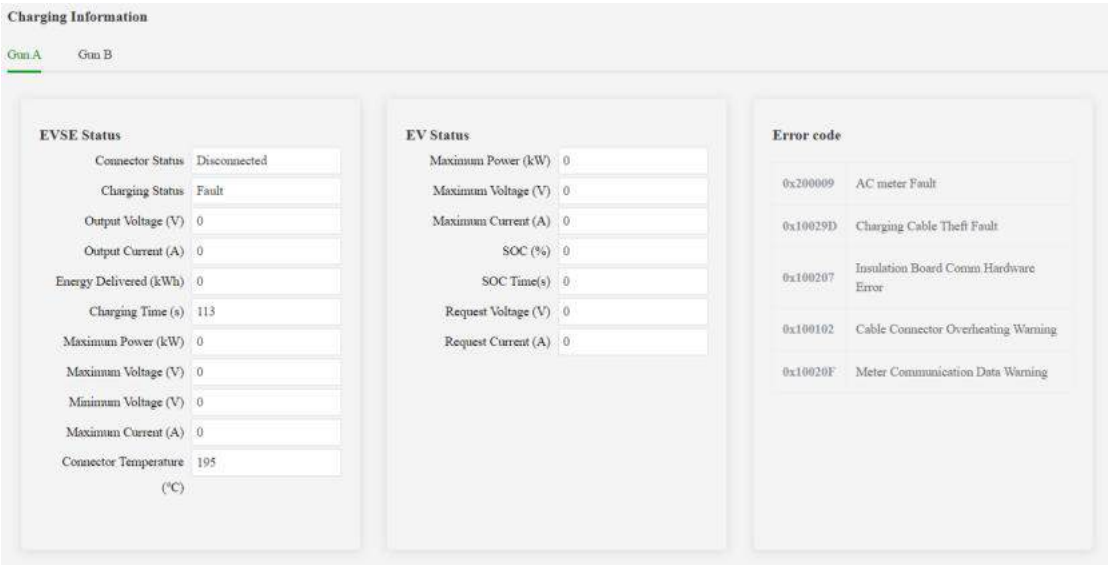

Figure 6-22 Charging information of the user unit

6.9.2 Basic configuration setting of the user unit

Navigation panel: **System Configuration** > **Basic Configuration**.

6.9.2.1 Charge Method (Optional)

Click the pencil icon to modify parameters. (Enable / disable)

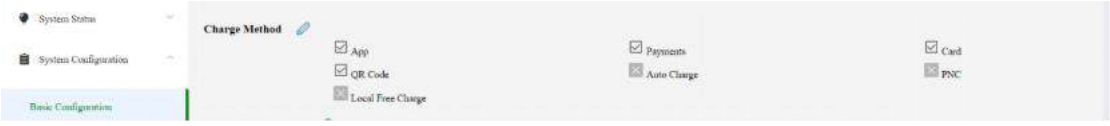

Figure 6-23 Charging method of the user unit

Note: Charge method here just to modify the icons shown on HMI, corresponding methods are based on Power cabinet Authentication Mode

6.9.2.2 Double Gun Charge (Optional)

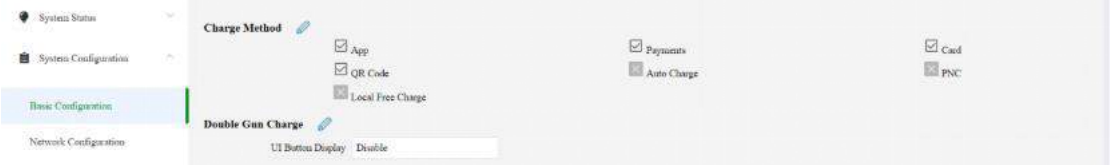

Figure 6-24 Charging method of the user unit

Click the pencil icon to modify parameters. (Enable / disable).

Note: Double Gun Charge mainly for EV BUS with 2 charging slots. Keep as default setting (Disable)

if not required.

6.9.2.3 UI Manual Stop Charging Method (Optional)

Click the pencil icon to modify parameters. (Enable / disable)

Figure 6-25 Stop method of the user unit

Note:

- The stop button for indication how to stop is always activated by default when authentication mode other than Mac address or Free charging is selected.
- When Mac address authentication or Free charging mode is selected the button is disable by default (to avoid anyone can stop a session). But it can be activated in case of need.

6.9.2.4 HMI Language (Optional)

Note: This step is needed to determine which languages the EV driver will be able to select on the HMI of the charger. The maximum number of languages is 12.

(1) Click System Configuration - Basic Configuration - HMI Language.

(2) Click the pencil icon to modify parameters.

(3) Remove the unnecessary languages and add the required languages from the drop-down list.

(4) Save the settings and reboot, check if the settings are correctly shown on the screen.

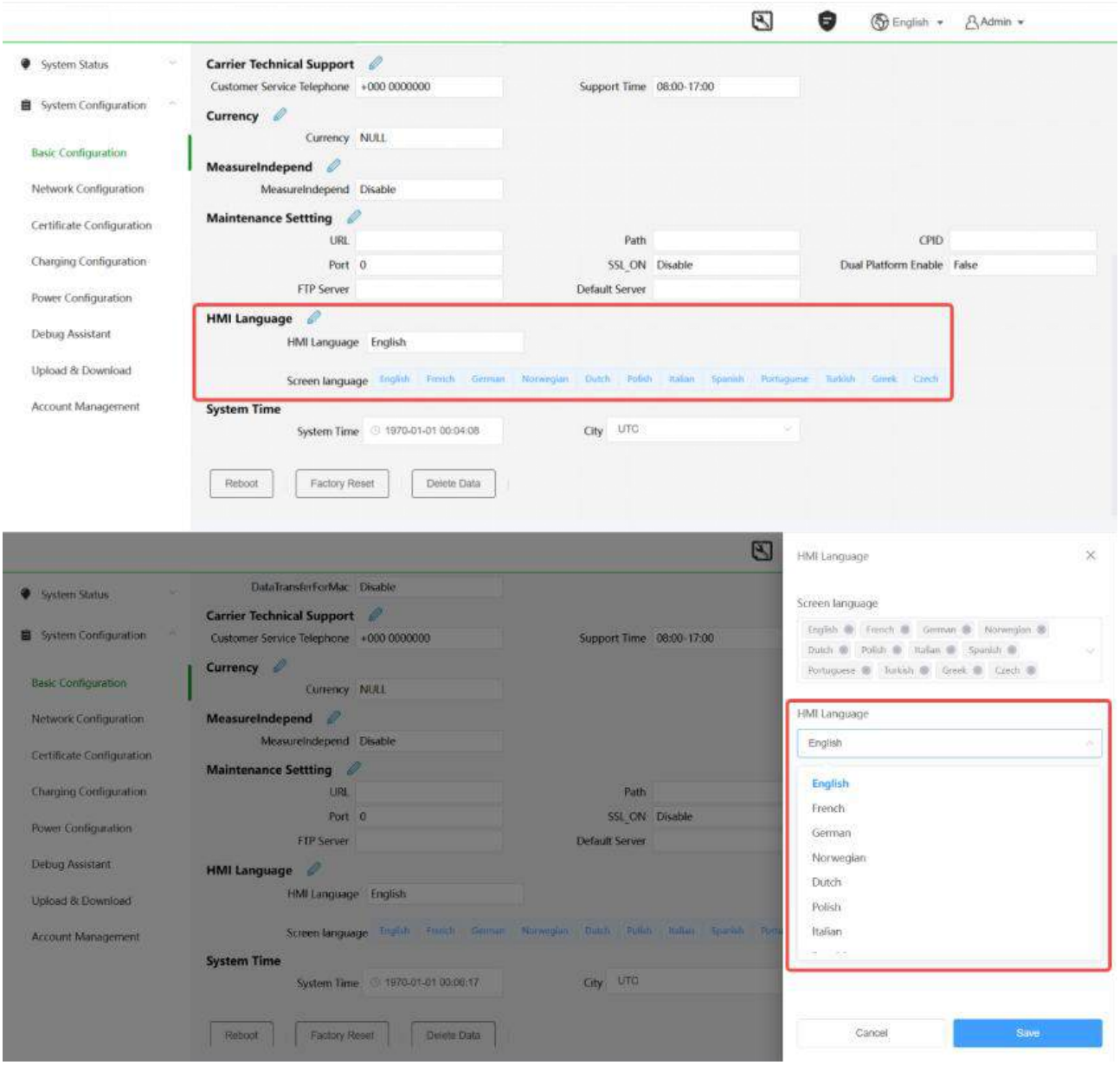

Figure 6-26 Language select of the user unit

6.9.2.5 System Time (Optional)

Note: Time setting will automatically change if the Charging Station is connected to an OCCP backend. But even in that case time and date need to be set initially, to ensure the first communication with the OCPP backend. Time zone city needs to be selected.

(1) Find System Time.

(2) Click on the System time box to set manually or click Now to synchronize with the computer time and date.

(3) Use the City drop-down menu to select the suitable time zone.

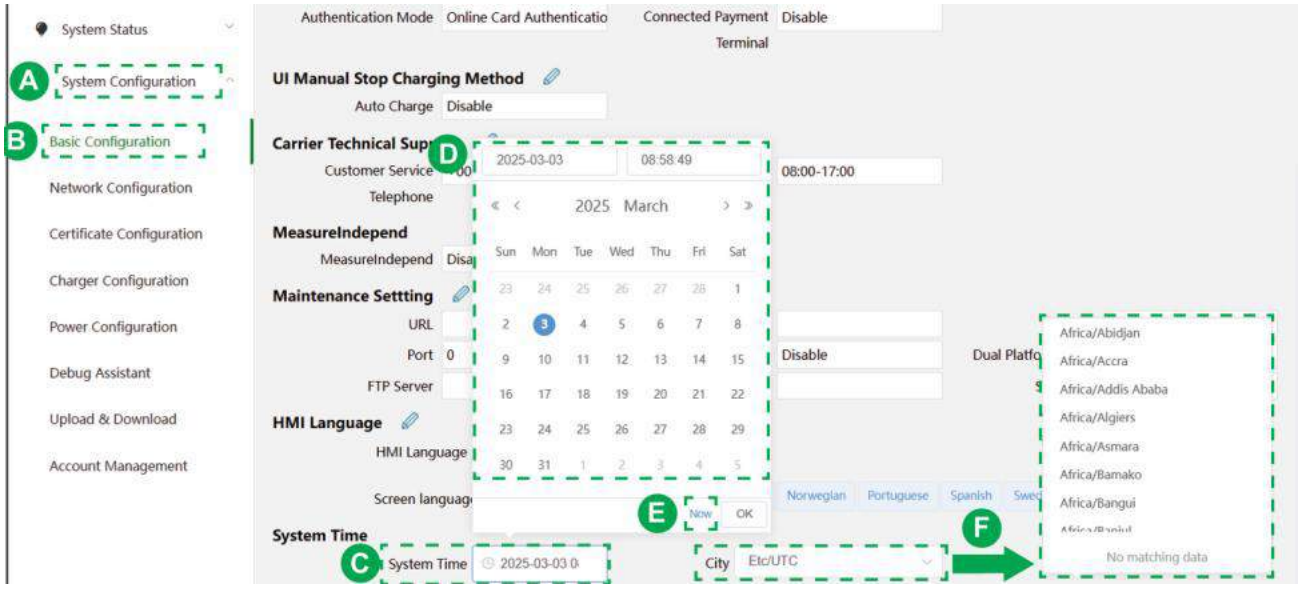

Figure 6-27 System time setting of the user unit

6.9.3 Charger configuration (Optional)

Navigation panel：System Configuration > Charger configuration.

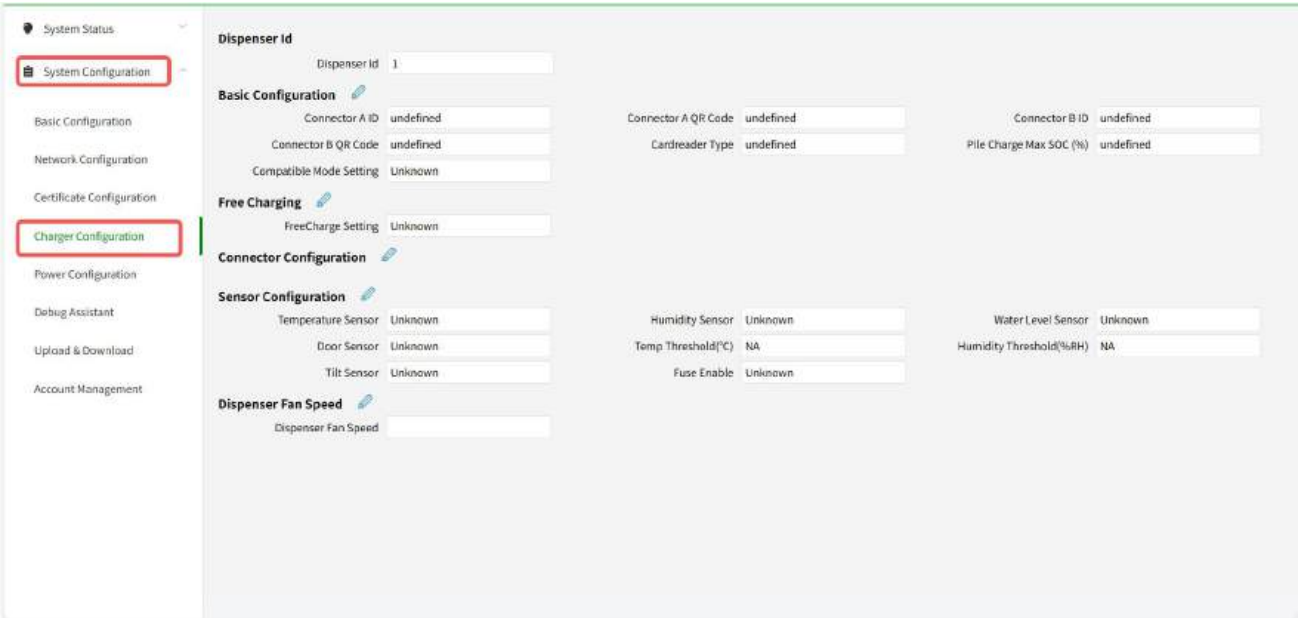

Figure 6-28 Charger configuration of the user unit

6.9.3.1 Basic Configuration

(1) System Configuration - Charger configuration - Basic Configuration.

(2) Click the pencil icon to modify parameters.

(3) Set the Alternating Charging parameters (Optional).

(4) Check the Connector ID is set as 1 and 2. No need to modify factory setting.

(5) Set the QR Code for each connector (Optional).

QR Code must be unique to each charging connector and Charging Station and must be within 40 characters.

This value can be set as a simple alphanumerical ID which could be used by Charge Point Operator application for charger and charging connector authentication.

It could be also a web address to directly link to a Charge Point Operator application. Once the QR Code is set it will appear on the authentication screen as one of the options to provide authentication for a backend to authorize a charging session.

(6) Click Save.

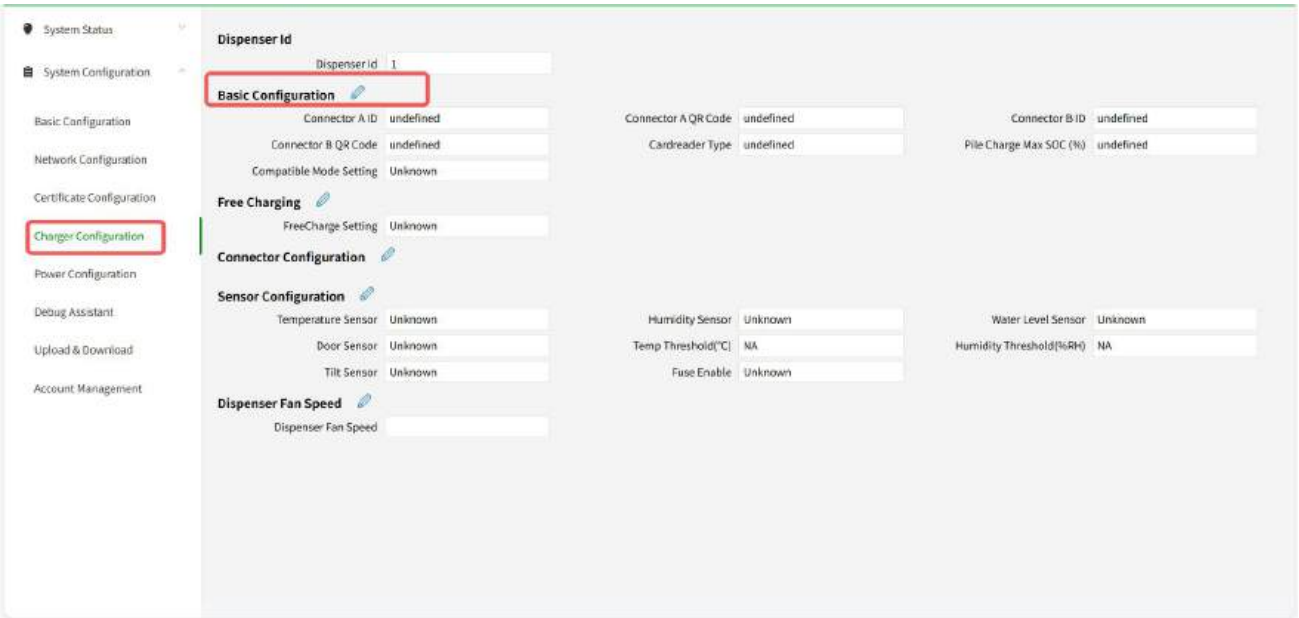

Figure 6-29 Charging basic configuration of the user unit

6.9.3.2 Free Charging (Optional)

(1) System Configuration - Charger configuration - Free Charging

(2) Click the pencil icon to modify parameters.

(3) Set the Free Charging parameters (Optional).

If customer backend platform enables this function, when ocpp offline, charger can start charging for free. Keep as default setting (Disable) if not required.

Figure 6-30 Free charging configuration of the user unit

6.9.3.3 Connector Configuration (Optional)

This parameter has already been set during the factory debugging process and no further settings are required.

(1) System Configuration - Charger configuration - Connector Configuration.

(2) To modify these parameters, click on the pencil icon.

(3) Configure the Guns respectively

(4) Set the Maximum Output Current and/or Maximum Output Voltage allowed to the desired load or set the Maximum Power delivered to the desired power.

(5) Set the Boost Enable to enable boost mode. **(Contact StarCharge team for detailed settings)**

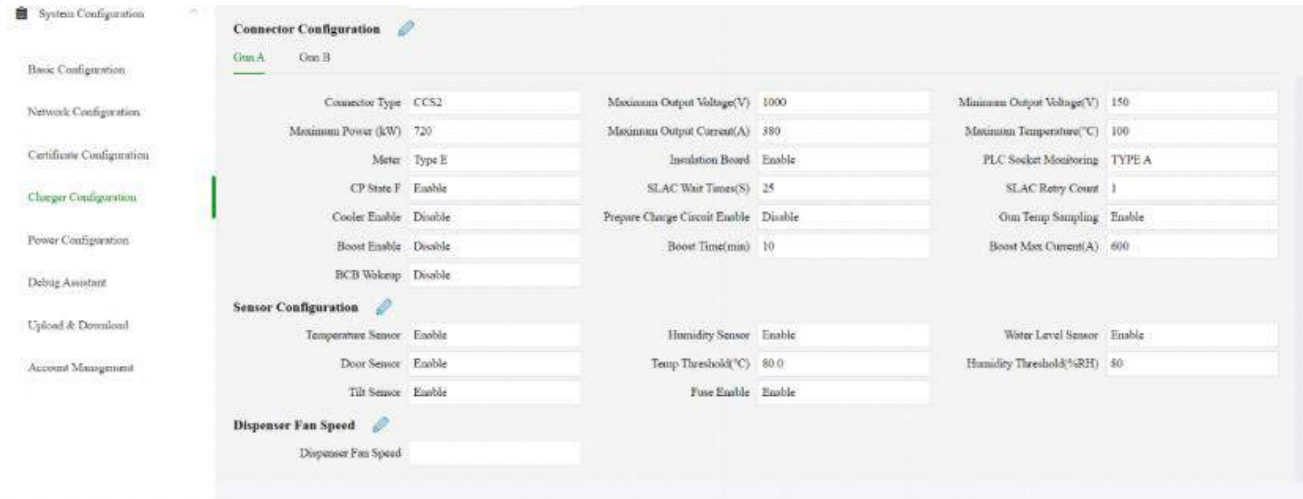

Figure 6-31 Connector configuration of the user unit

6.9.3.4 Sensor Configuration (Optional)

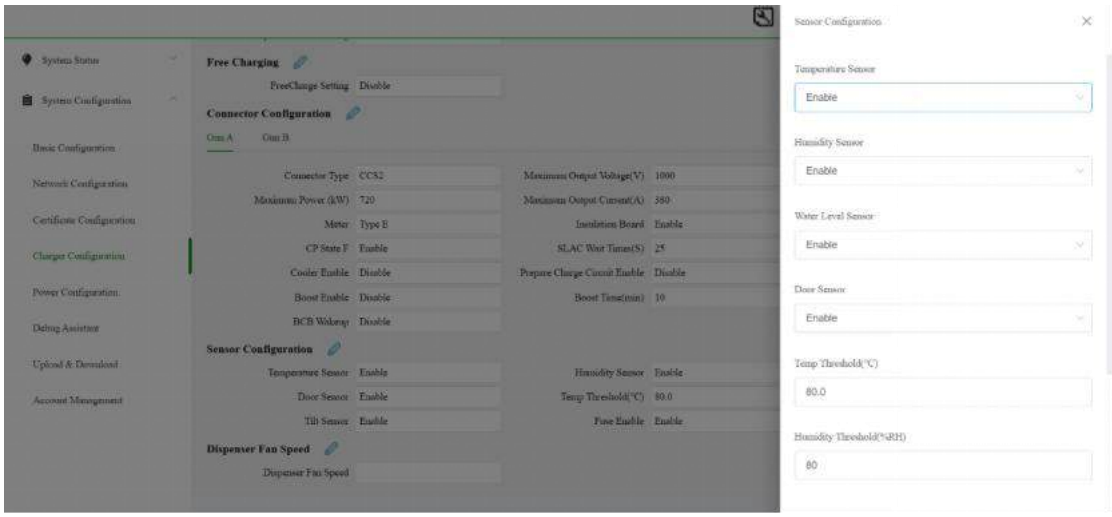

Figure 6-32 Sensor configuration of the user unit

(1) System Configuration - Charger configuration - Sensor Configuration

(2) To modify sensors parameters, click on the pencil icon.

(3) Set the required parameters for each sensor.

(4) Click Save.

Available Settings	
Temperature sensor:	Internal temperature sensor. **Must always be enabled.**
Humidity Sensor:	Internal humidity sensor. **Must always be enabled.**
Water Level Sensor:	Internal water flooding sensor. **Must always be enabled.**
Door Sensor:	Door open detection sensor. **Must always be enabled.**
Humidity Threshold:	Door open detection sensor. **Must always be enabled.**
Tilt Sensor:	Internal Tilt/shock sensor that will interrupt output power/charging session if the sensor detects a tilt or strong impact. **Must always be enabled.**

Table 6-3 The function of each sensor

6.9.3.5 Dispenser Fan Speed (Optional)

Set the Fan speed to test the Fan function, set the value to 0 and click save after the test is completed.

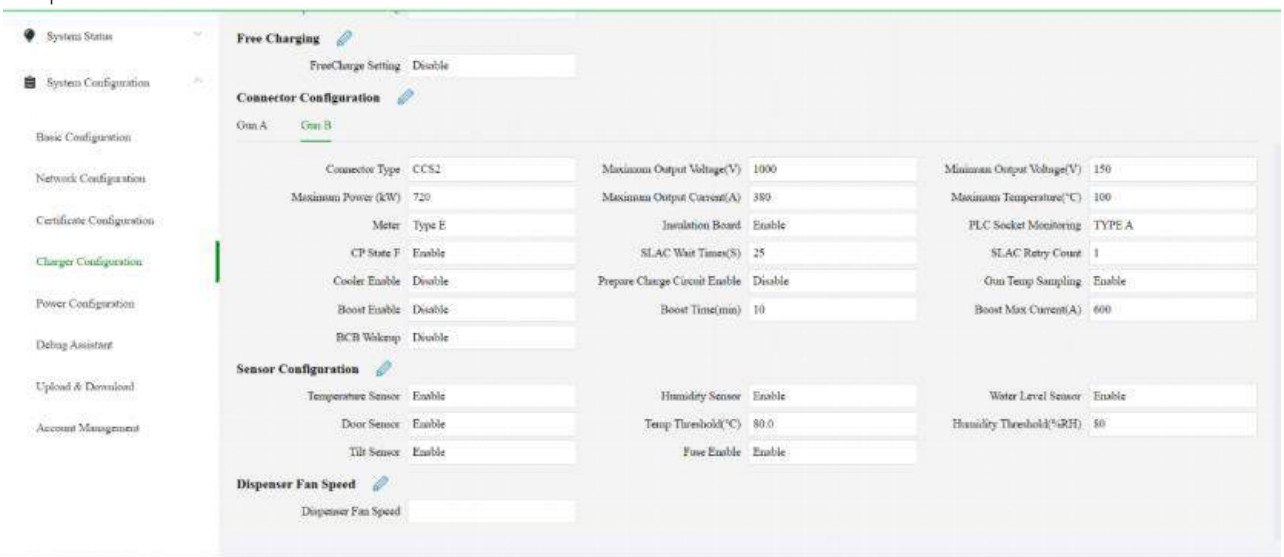

Figure 6-33 Dispenser fan speed of the user unit

6.9.4 Debug Assistant (Optional)

Navigation panel：System Configuration >> Debug Assistant.

(1) Find Debug Assistant.

(2) Fan Speed: Enables activating the Fan at the entered speed from 0 to 100%.

(3) Fan Control: Start/Stop the Fan manually.

(4) AC Contactor: Open/Close the AC Contactor manually.

(5) DC Contactor Control: Open/Close the DC Contactors K1 or K2 for each Vehicle Connector.

(6) PDU: Open/Close contactors on PDU.

(7) Power Test: Simulates a charging session on the selected connector by requesting voltage and

current.

(8) Power Module Test: Set Power Module ID, Output Voltage, Output Current to test Power Module.

Attention:

Do not use this function without Technical engineer supporting.

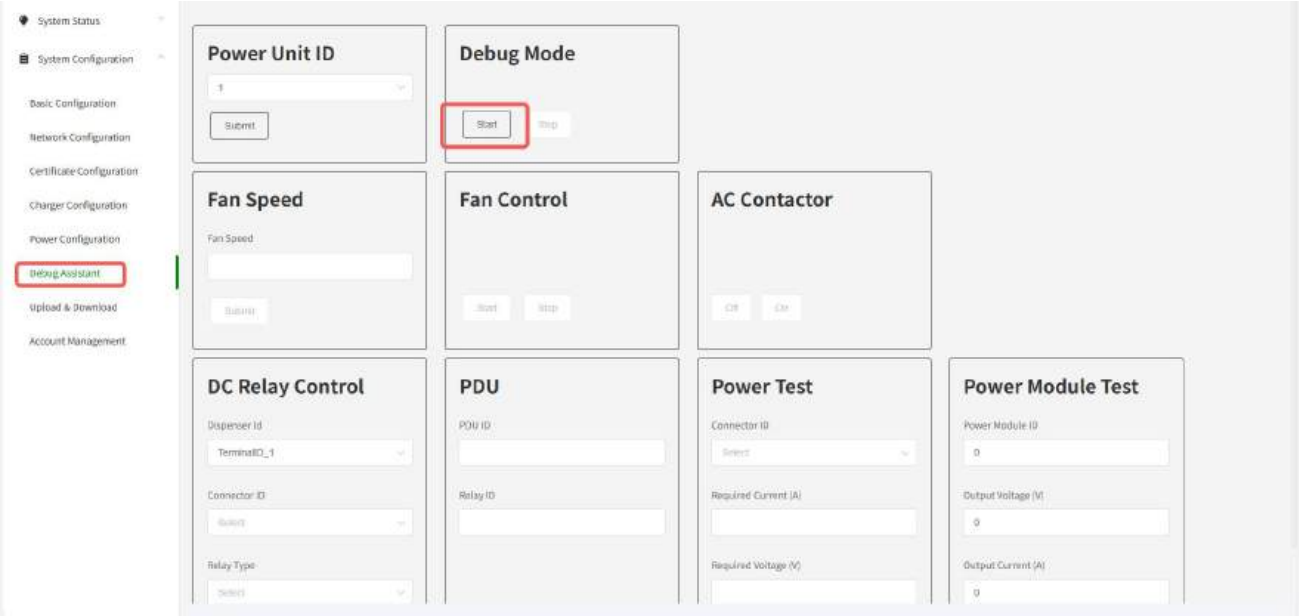

Figure 6-34 Debug model of the user unit

6.9.5 Upload (Optional)

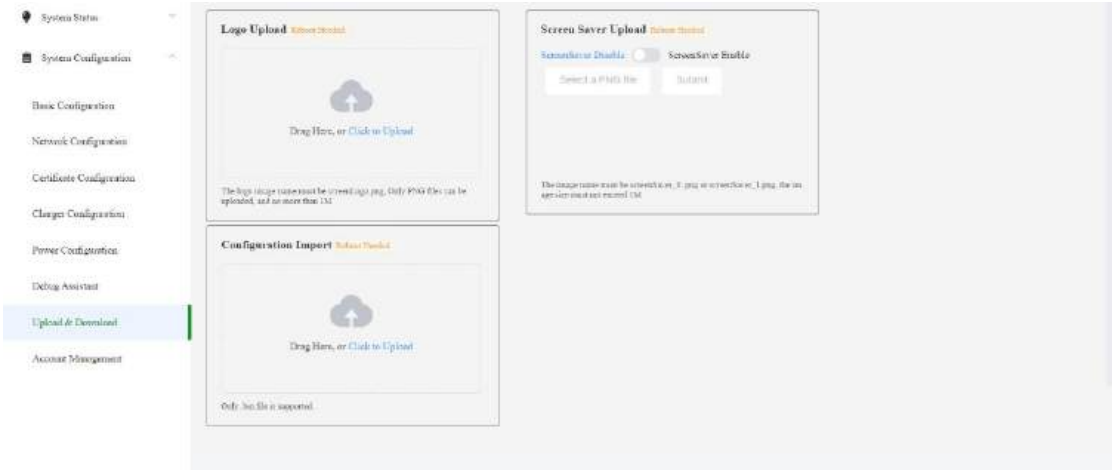

Figure 6-35 Debug model of the user unit

(1) Under System Configuration.

(2) Find Upload & Download.

(3) Then Upload Logo (Check with StarCharge team for Logo size details).

(4) Then Upload Screen Saver (Check with StarCharge team for Logo size details).

6.9.6 Account Management

The password for logging into the charger's Web UI can be added or deleted.

6.10 Manually upgrade firmware

6.10.1 Update SECC via Micro SD card

(1) Insert a Micro SD card into a laptop (Specific card for programming, don't use the original Micro SD card inside the EVSE).

(2) Enter the folder (A6G2C-WB128LI-Flash) and double click the file (a53_burn_script.bat).

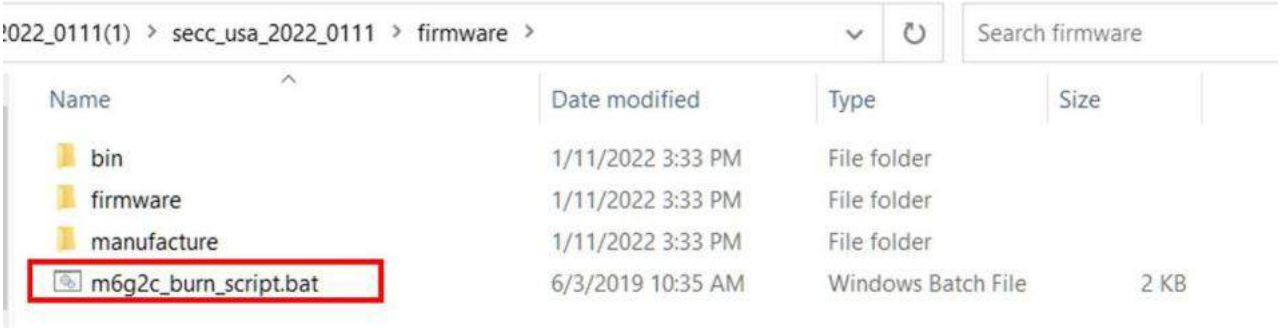

Figure 6-36 Update SECC via Micro SD card #1

(3) Enter the driver of Micro SD card. For example, the driver of my Micro SD card is "F".

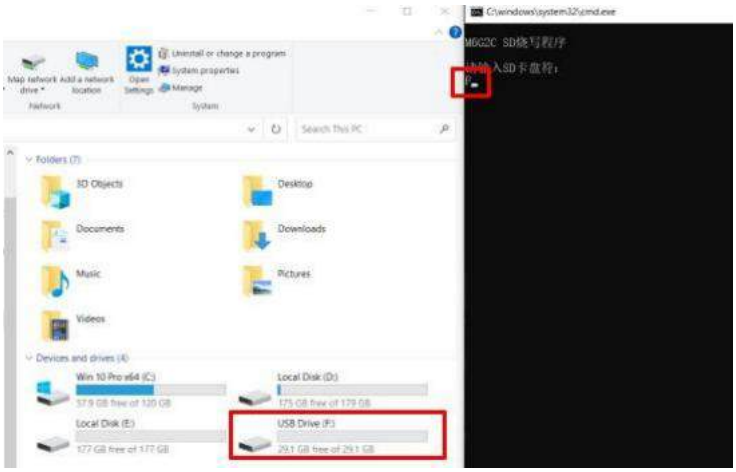

Figure 6-37 Update SECC via Micro SD card #2

(4) If there's a warning shown as the figure below, enter "y" to confirm and wait for the file to be copied completely.

```
M6G2C SD烧写程序

请输入SD卡盘符:
F
注意:
    文件会被烧写在 F 盘
ECHO is off.
ECHO is off.
**** 清除SD卡前4M空间内容 ****
rawwrite dd for windows version 0.6beta3.
Written by John Newbigin <jn@it.swin.edu.au>
This program is covered by terms of the GPL Version 2.

10+0 records in
10+0 records out
ECHO is off.
**** 重建分区表 ****
WARNING: make sure your input is right [y/*]
y
```

```
M6G2C SD烧写程序

请输入SD卡盘符:
F
注意:
    文件会被烧写在 F 盘
ECHO is off.
ECHO is off.
**** 清除SD卡前4M空间内容 ****
rawwrite dd for windows version 0.6beta3.
Written by John Newbigin <jn@it.swin.edu.au>
This program is covered by terms of the GPL Version 2.

10+0 records in
10+0 records out
ECHO is off.
**** 重建分区表 ****
WARNING: make sure your input is right [y/*]
y
Reserved Sector: 2048
Drive: F
ECHO is off.
**** 格式化分区 ****
Warning ALL data on drive 'F' will be lost irretrievably, are you sure
(y/n) :y_
```

Figure 6-38 Update SECC via Micro SD card #3

(5) After successful copying, press any key to exit and finish programming the microSD card.

```
Warning ALL data on drive F: will be lost irretrievably, are you sure
(y/n) :y
Size : 31GB 61141342 sectors
512 Bytes Per Sector, Cluster size 4096 bytes
Volume ID is 15f5:3037
32 Reserved Sectors, 59592 Sectors per FAT, 2 fats
7627765 Total clusters
7627764 Free Clusters
Formatting drive F:...
Clearing out 119224 sectors for Reserved sectors, fats and root cluster...
Wrote 61042688 bytes in 4.76 seconds, 12.22 Megabytes/sec
Initialising reserved sectors and FATs...
DoneECHO is off.
**** 烧写UBOOT到保留分区 ****
drive = F
removable = no
device block size = 512 bytes
device block count = 0x3a4f95e

firmware size = 0x71c00 bytes (0x38e blocks)
extra blocks = 1136
Writing firmware...
done!ECHO is off.
ECHO is off.
**** COPY FILES ****
manufacture\initramfs.uboot
1 File(s) copied
firmware\logo.bmp
1 File(s) copied
firmware\u-boot.imx
1 File(s) copied
firmware\dh180_a6g2c-wifi-bt-128m.dtb
1 File(s) copied
firmware\zImage
1 File(s) copied
firmware\rootfs.sqfs
1 File(s) copied
firmware\ubi.tar.gz
1 File(s) copied
烧写完毕，按任意键退出
```

Figure 6-39 Update SECC via Micro SD card #4

(6) Power off the SECC board, insert the Micro SD card, and turn on both 2 switches marked red shown in the figure below (“ON” Side).

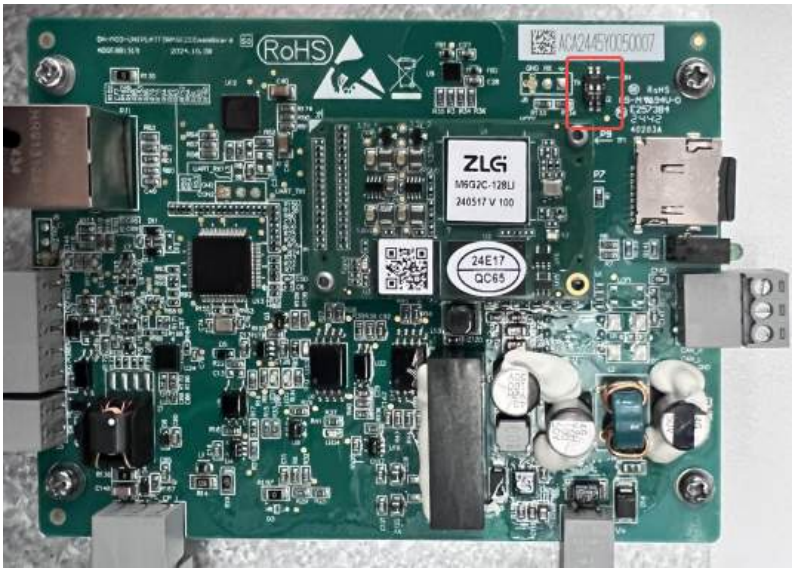

Figure 6-40 Update SECC via Micro SD card #5

(7) Power on the board again, the update will begin.

Note: The LED light will flash continuously during the update.

(8) Power off the board after the LED light is solid on for 30 seconds.

(9) Return back both DIP switches to positions 1 and 2.

Figure 6-41 Update SECC via Micro SD card #6

(10) Remove the programmed Micro SD card.

(11) Insert the original Micro SD card (in Step 8) back into the SECC board.

(12) Power on again to finish programming. It will take a little longer for the first reboot.

6.10.2 Update M4 board (CB02)/PDU control board/Environmental monitoring board via Micro SD card

(1) Connect the Jlink to the M4 board (CB02), the PDU control board, or the environmental monitoring board.

Figure 6-42 Update M4 board (CB02)/PDU control board/environmental monitoring board via Jlink #1

(2) Open "J-Flash V6.3.2"on the laptop.

(3) Choose the ".jlash" file.

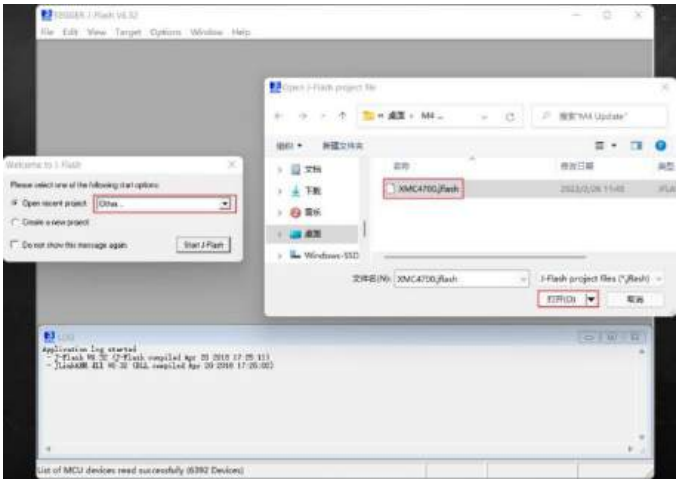

Figure 6-43 Update M4 board (CB02)/PDU control board/environmental monitoring board via Jlink #2

(4) Open the ". Mot" file.

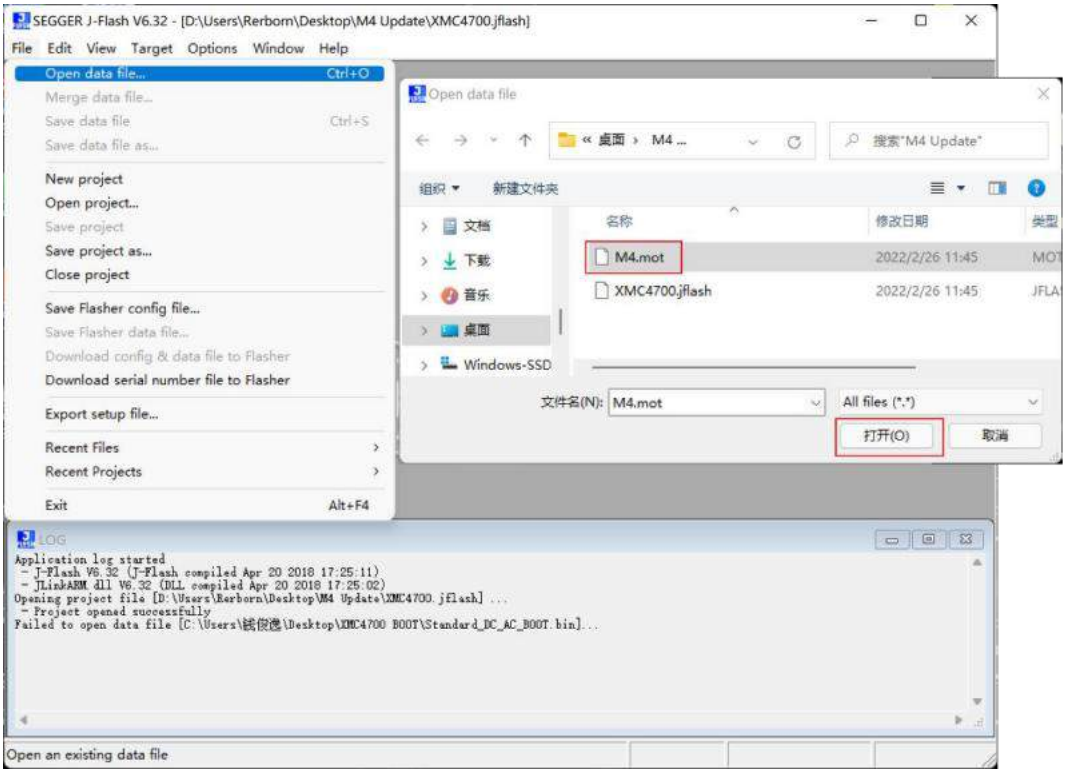

Figure 6-44 Update M4 board (CB02)/PDU control board/environmental monitoring board via Jlink #3

(5) Click **Target > Connect**.

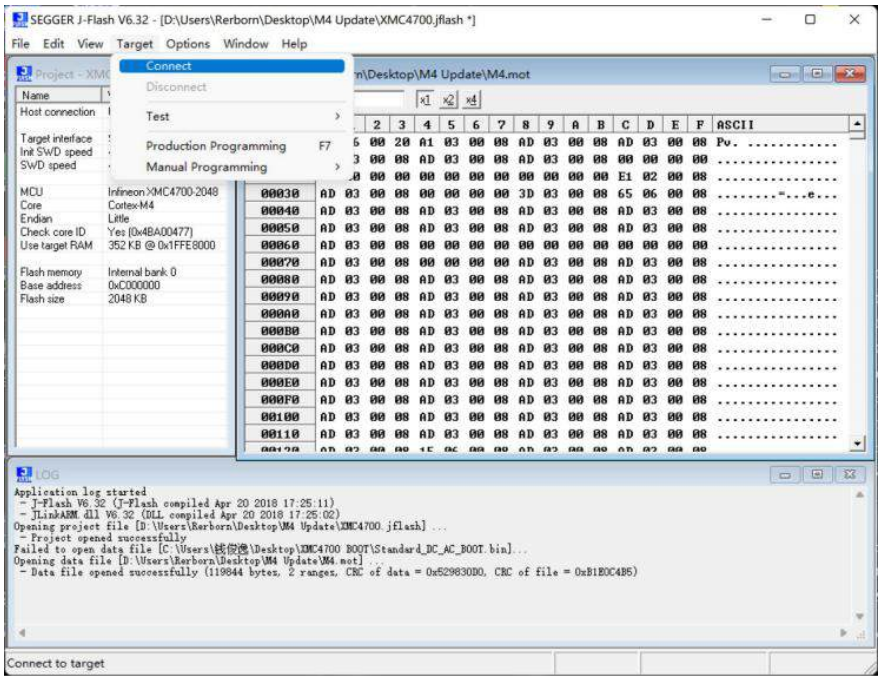

Figure 6-45 Update M4 board (CB02)/PDU control board/environmental monitoring board via Jlink #4

(6) Click **Target > Manual Programming > Erase Chip**.

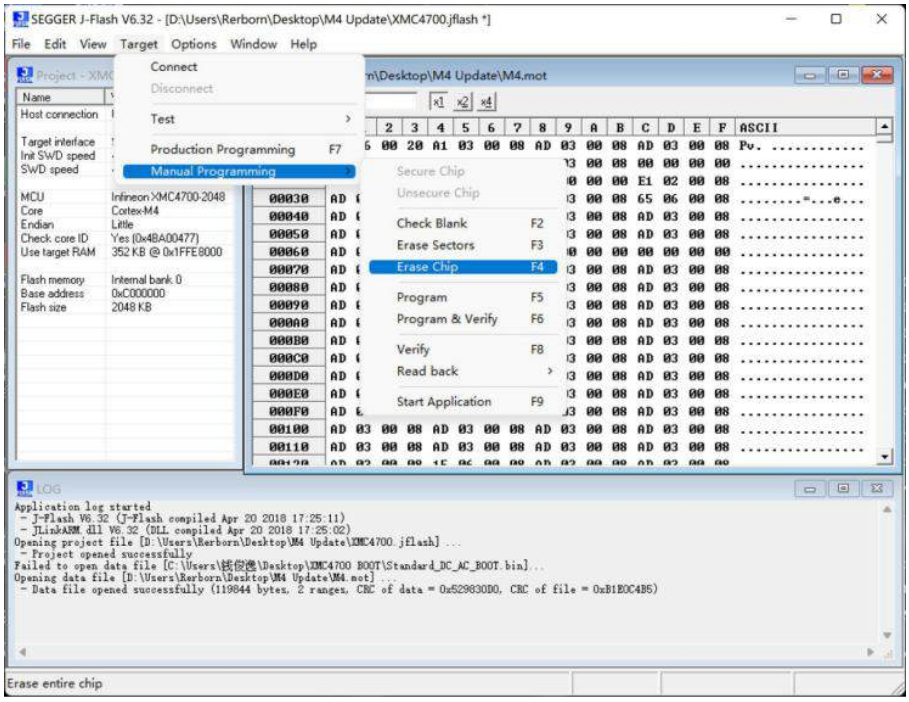

Figure 6-46 Update M4 board (CB02)/PDU control board/environmental monitoring board via Jlink #5

(7) Click **Target > Manual Programming > Program & Verify**. Try again if it fails.

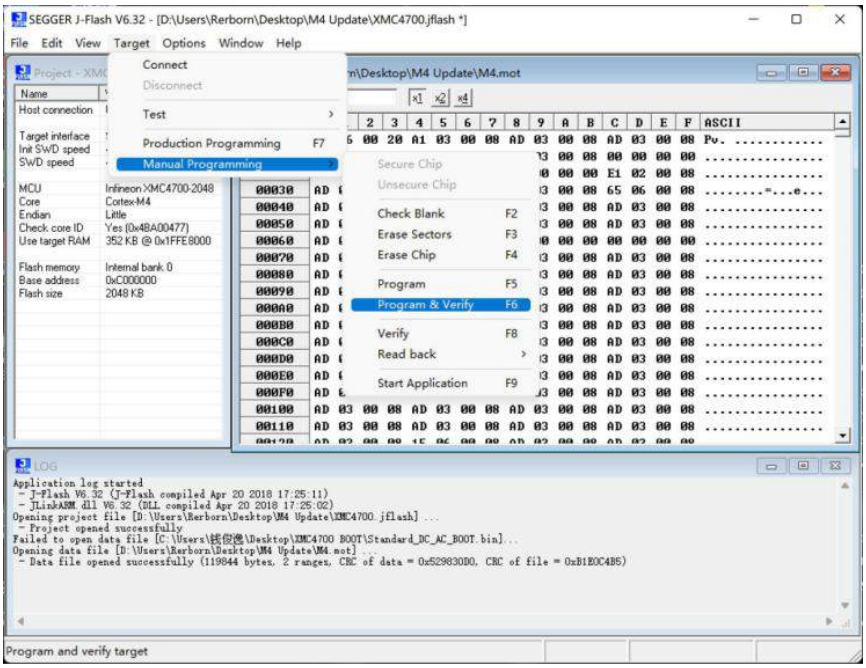

Figure 6-47 Update M4 board (CB02)/PDU control board/environmental monitoring board via Jlink #6

(8) **Click Target > Manual Programming > Start Application.**

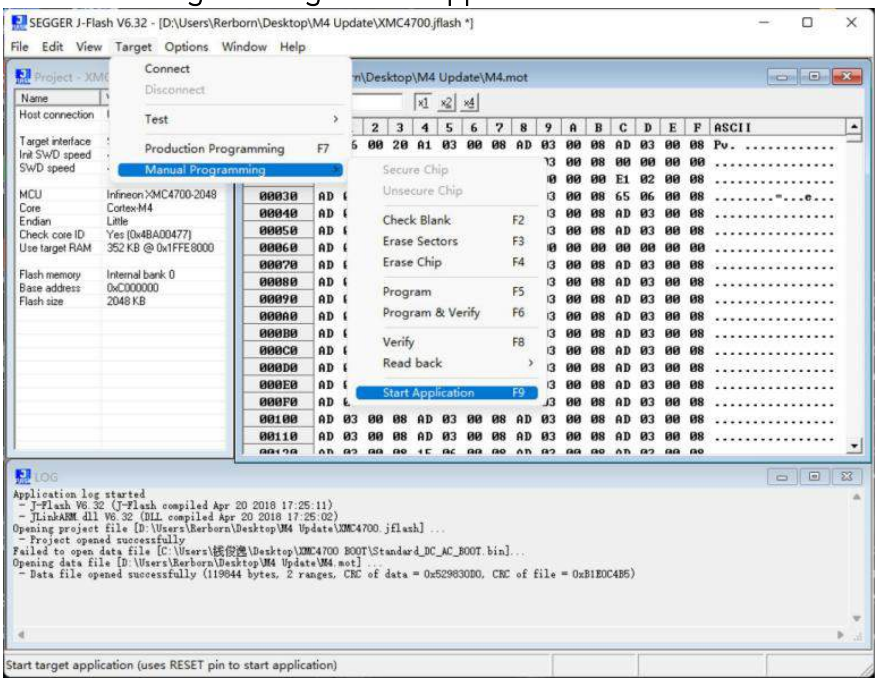

Figure 6-48 Update M4 board (CB02)/PDU control board/environmental monitoring board via Jlink #7

6.10.3 Update AM62 board via Micro SD card

(1) Insert a Micro SD card into a laptop (specific card for programming, don't use the Micro SD card put in the EVSE).

(2) Enter the folder (AM62MainBoard) and double click the file (m6g2c_burn_script.bat).

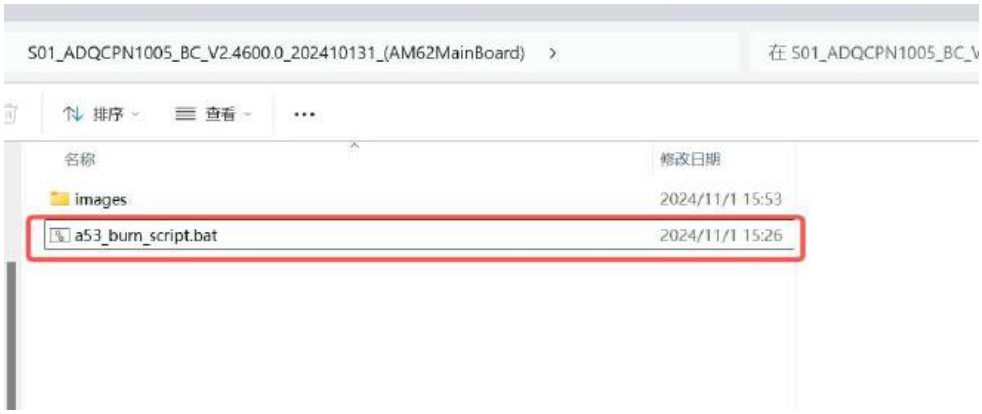

Figure 6-49 Update AM62 via Micro SD card #1

(3) Enter the driver of Micro SD card. For example, the driver of my Micro SD card is "G", then click the enter.

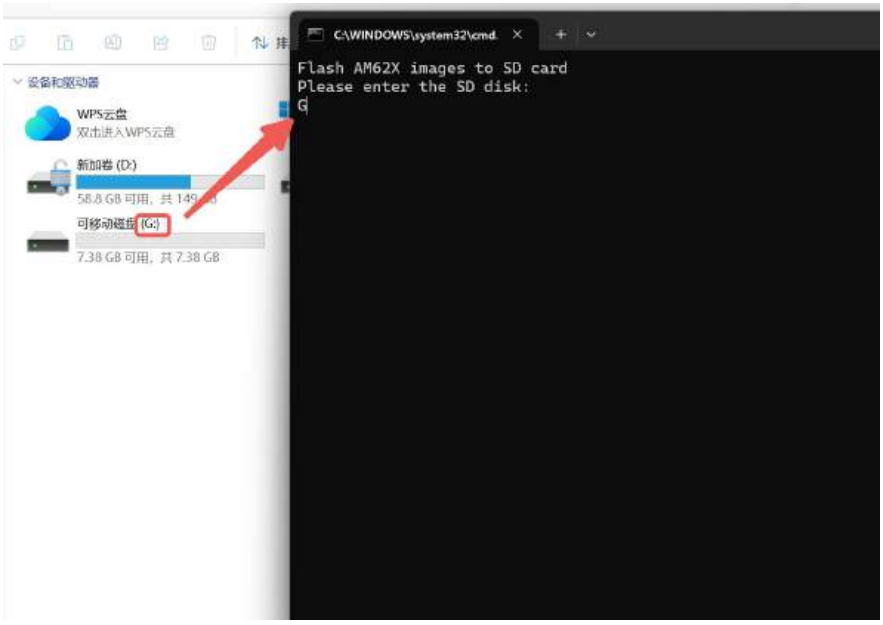

Figure 6-50 Update AM62 via Micro SD card #2

(4) Click **Enter** again.

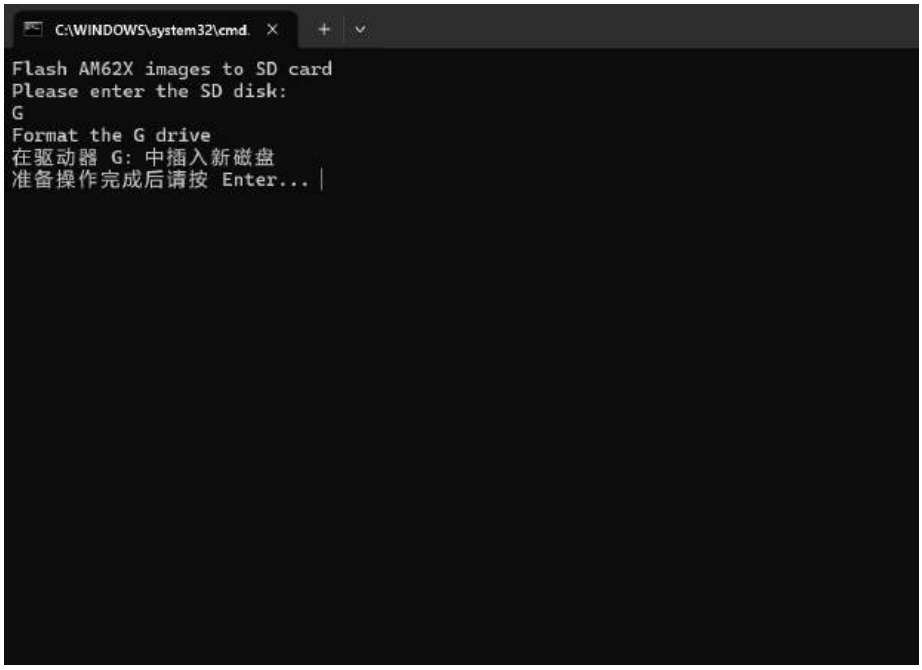

Figure 6-51 Update AM62 via Micro SD card #3

(5) After successful copying, press any key to exit and finish programming the microSD card.

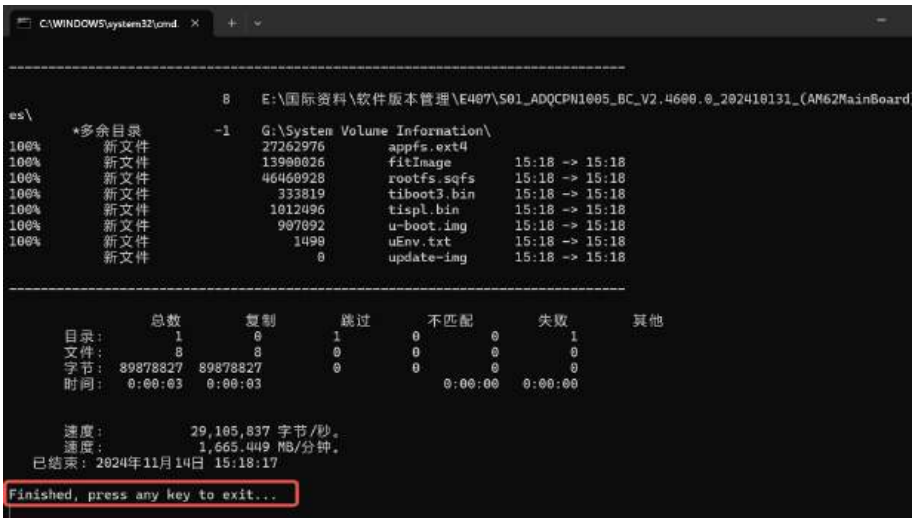

Figure 6-52 Update AM62 via Micro SD card #4

(6) Power off the AM62 board, insert the Micro SD card, and turn both 2 switches marked black shown in the figure below to ON position.

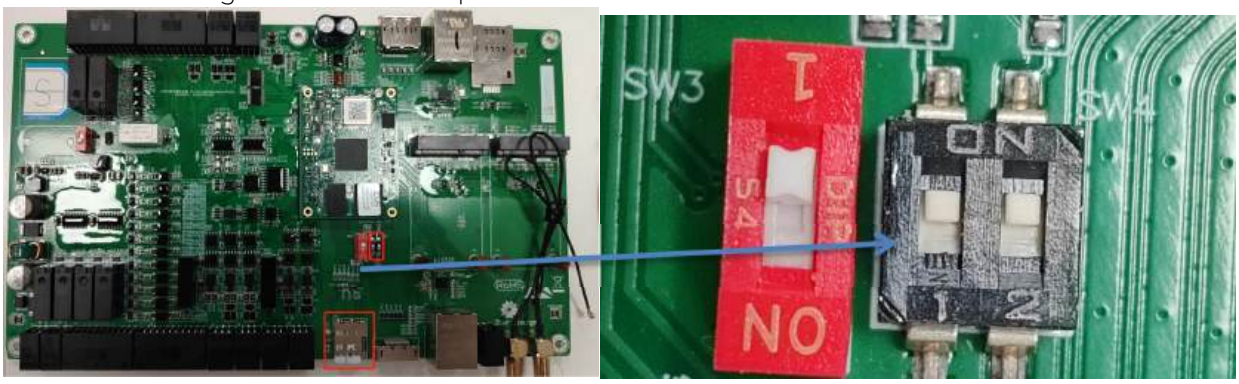

Figure 6-53 Update AM62 via Micro SD card #5

(7) Power on the board again, the update will begin.

Note: The LED light will flash continuously during the update.

(8) If the indicator effect is heartbeat (the default indicator effect configured in the kernel: Blink twice fast -> Off - Off -> Blink twice fast), the AM62 is successfully updated, wait for 30 seconds and power off, and then switch both switches back to positions 1 2.

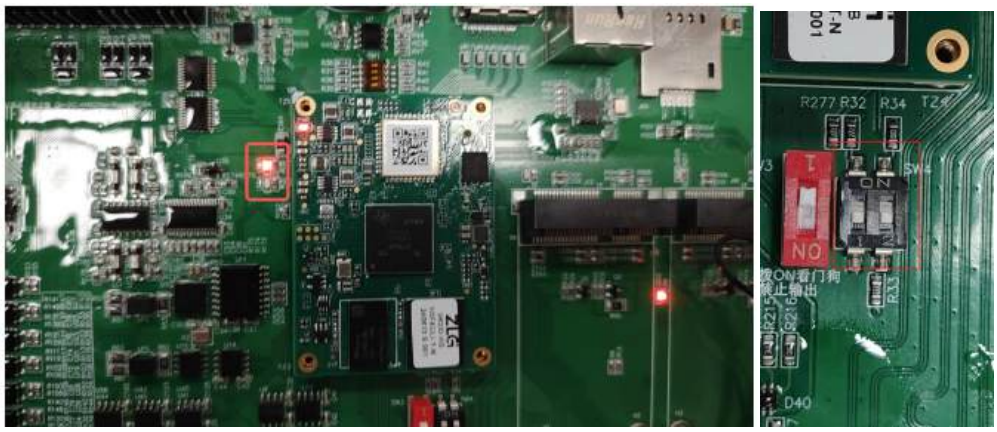

Figure 6-54 Update AM62 via Micro SD card #6

(9) Remove the programmed Micro SD card, insert the original Micro SD card back into the AM62 mainboard, and then power on again to finish programming. It will take a little longer for first reboot.

6.11 Charging function check

6.11.1 Charging testing

Follow the instructions in the user manual to perform the charging test. Complete the checkpoints and record any unauthorized items in table below.

6.11.2 Hardware function check

Check whether the following hardware functions meet the requirements. Complete the checkpoints and record any unauthorized items in table below.

- Door sensor: Open the EVSE door while charging. The EVSE should stop charging.
- Tilt sensor: Tilt the tilt sensor inside the EVSE while charging. The EVSE should stop charging.
- Emergency stop: Press the emergency stop on the side of the user unit or on the front of the power cabinet to stop charging.
- Fan: Check whether the fan inside the EVSE and the fan of the power module operate during charging.
- Meter: Check whether the meter displays accurately during charging.
- Charging cable: Make sure that the charging cables have no burrs, sharp edges, or signs of ignition or burning. The insulation cap on the easy-touch surface of the charging cable must be securely fastened. The charging cable should not be too tight or too loose when inserting and pulling out the charging connector.
- Contactors: Contactors should be open or closed normally.

6.12 Customer training

After completing the EVSE commissioning work, the personnel should provide the customer with basic training on the main features of the EVSE. This training is to help the customer learn how to use the EVSE and give them essential knowledge. The training can be in the form of written documentation or practical on-site explanations. The training content should include safety information, the basic charging procedure, and other relevant topics.

Once the customer is satisfied with the training, the personnel should get the customer's signature and properly record the training file.

6.13 Appendix

Appendix 1 Post-installation Checklist

Post-installation Checklist			
No.	Checking items	Checking result (Y/N)	Note
1	Installation levelness is qualified		
2	The appearance is clean and tidy without bumps or damage		
3	All the parts /screws/bolts are fixed firmly without looseness and no parts missing		
4	No insulating layer of cable is scratched or damaged		
5	The phase sequence of the power cable wiring is correct		
6	The wiring terminals and screws are tightened without looseness		
7	No abnormality in the upstream power grid voltage		

Appendix 2 Customer Training Record Sheet

Customer Training Record Sheet

Customer:

Project Name		Trainer	
Product Name		Training method	
Training Department		Training Date	
Training Content			
Training Purpose			
Training Content Outlines	1. Basic charging procedure ☐ 2. Emergency stop usage scenario ☐ 3. Common sense of safety and emergency ☐ 4. Troubleshooting process ☐		
Trainee Signature			
Customer feedback			
Customer:		Project Manager:	

Appendix 3 Commissioning Report

Commissioning Report

Date:
Commissioning Engineer:
Charging Station:
Address:

1 Details of EVSE

ID	Specification	Power module type	Power module quantity	Installation	Charging cable length	Firmware version	Backend

2 Installation recheck

Item	Content	Conclusion	Remark
Input voltage	480 Vac ±10% line voltage	☐ Pass ☐ Fail	
Input cable sequence	Neutral (N), live (L), and protective earth (PE) lines are all connected correctly	☐ Pass ☐ Fail	
Connection between power cabinet and user unit	All cables are connected in the correct sequence	☐ Pass ☐ Fail	

3 Check before power on

3.1 Visual check

Item	Content	Conclusion	Remark
Appearance	The enclosure of the EVSE is clean. The charging cable is not faulty. The EVSE is not tilted. The QR code is clear.	☐ Pass ☐ Fail	
Sign	No missing safety symbols and the nameplate is correct and clear.	☐ Pass ☐ Fail	
Components	The EVSE is the required type. The accessories are complete, including user manual, factory inspection report, and the random documents of qualification certificate.	☐ Pass ☐ Fail	
Sealing objects	The sealant is blocked in place.	☐ Pass ☐ Fail	

3.2 Environmental condition check

Item	Content	Conclusion	Remark
Operating Temperature	-30℃ to 50℃	☐ Pass ☐ Fail	
Humidity	5% to 95%	☐ Pass ☐ Fail	
Altitude	≤2000m	☐ Pass ☐ Fail	

3.3 Internal wiring check

Note: When using a multimeter/megohmmeter to test the following items, ensure that EVSE is off. Before conducting the inspection, it is necessary to verify whether the buzzer function of the multimeter and the function of the megohmmeter are normal.

Item	Content	Conclusion	Remark
Insulation value between input DC+ cable of connector A and PE	≥10MΩ	☐ Pass ☐ Fail	
Insulation value between input DC- cable of connector A and PE	≥10MΩ	☐ Pass ☐ Fail	
Insulation value between input DC+ cable and DC- cable of connector A	≥10MΩ	☐ Pass ☐ Fail	
Insulation value between input DC+ cable of connector B and PE	≥10MΩ	☐ Pass ☐ Fail	
Insulation value between input DC- cable of connector B and PE	≥10MΩ	☐ Pass ☐ Fail	
Insulation value between input DC+ cable and DC- cable of connector B	≥10MΩ	☐ Pass ☐ Fail	
Verify the correctness of the DC positive and negative polarity connections between Connector A and the output copper busbars of the power cabinet. Refer to the test method specified in Section 3.4.1.3.	No reverse connection and no wrong connection	☐ Pass ☐ Fail	
Verify the correctness of the DC positive and negative polarity connections between Connector B and the output copper busbars of the power cabinet. Refer to the test method specified in Section 3.4.1.3.	No reverse connection and no wrong connection	☐ Pass ☐ Fail	
N and DC+/DC-	≥10MΩ	☐ Pass ☐ Fail	
DC+ and DC- of charging cable	≥10MΩ	☐ Pass ☐ Fail	
DC+ and DC- of output copper bar	≥10MΩ	☐ Pass ☐ Fail	
DC+ of charging cable and DC+ of output copper bar	Continuous	☐ Pass ☐ Fail	

Item	Content	Conclusion	Remark
DC- of charging cable and DC- of output copper bar	Continuous	☐ Pass ☐ Fail	

3.4 Screws and connectors check

Item	Content	Conclusion	Remark
All screws of input	All screws are fastened without loosening or missing	☐ Pass ☐ Fail	
All screws of main breaker	All screws are fastened without loosening or missing	☐ Pass ☐ Fail	
Screws on the input and output of the power module socket	All screws are fastened without loosening or missing	☐ Pass ☐ Fail	
All grounding screws	All screws are fastened without loosening or missing	☐ Pass ☐ Fail	
Screws on DC+ and DC- copper bar	All screws are fastened without loosening or missing	☐ Pass ☐ Fail	
Each plug on the main control board	Each plug is firmly without loosening, and the plug connection is firmly without loosening	☐ Pass ☐ Fail	
Switch mode power supply	All screws are fastened without loosening or missing	☐ Pass ☐ Fail	

3.5 Voltage check before power on

Item	Content	Conclusion	Remark
Input Voltage of Main Breaker	480V ± 10% for line voltage 288V ± 10% for phase voltage	☐ Pass ☐ Fail	

4 Check after power on

4.1 Voltage check after power on

Item	Content	Conclusion	Remark
Output Voltage of Main Breaker	480V ± 10% for line voltage 288V ± 10% for phase voltage	☐ Pass ☐ Fail	

4.2 Basic check

Item	Content	Conclusion	Remark
Touchscreen	The touchscreen shows normally	☐ Pass ☐ Fail	
Status Indicators	The indicator lights work normally	☐ Pass ☐ Fail	
Switch Mode Power Supply	The switch mode power supply can provide 12V/24V normally and stably	☐ Pass ☐ Fail	
Residual Current Device	Press the “Test” button. It should be tripped	☐ Pass ☐ Fail	

4.3 Parameter configuration check

Item	Content	Conclusion	Remark
Configuration	Configure according to the requirements	☐ Pass ☐ Fail	
Backend Connection	Connect successfully	☐ Pass ☐ Fail	

5 Charging function check

5.1 Charging testing

Item	Content	Conclusion	Remark
Charging via APP	Start and stop charging via APP	☐ Pass ☐ Fail	
Charging via Tapping RFID Card	Start and stop charging via tapping RFID card	☐ Pass ☐ Fail	
Charging via Plug in and Charge Mode	Start and stop charging via plug in and charge mode	☐ Pass ☐ Fail	
Charging via MAC Start Mode	Start and stop charging via MAC start mode	☐ Pass ☐ Fail	

5.2 Hardware function check

Item	Content	Conclusion	Remark
Open the door of EVSE when charging, the EVSE should stop charging	The EVSE should stop charging if the door is opened while it is charging.	☐ Pass ☐ Fail	
Tilt the tilt sensor inside of the EVSE when charging, the EVSE should stop charging	The EVSE should stop charging if the tilt sensor is tilted while it is charging.	☐ Pass ☐ Fail	
Press the emergency stop button on the EVSE when charging, the EVSE should stop charging	The EVSE should stop charging if the emergency stop button is pressed while it is charging.	☐ Pass ☐ Fail	
Check whether the fan inside of EVSE and fan of power module during charging	Check that the fan inside the EVSE and the fan of the power module are operating while the EVSE is charging.	☐ Pass ☐ Fail	
Check whether the meter measures accurately during charging	Check that the meter is displaying accurate information while the EVSE is charging.	☐ Pass ☐ Fail	
There are no burrs, no sharp edges, no ignition or burning, no loosen insulation cap on the easy touch surface of the charging cable. It's neither too tight nor too loose when inserting and pulling out the charging cable	Check that the charging cable has no burrs, sharp edges, or signs of ignition or burning. The insulation cap on the easy-touch surface of the charging cable should be securely fastened. The charging cable should not be too tight or too loose when inserting and pulling out the charging connector.	☐ Pass ☐ Fail	
Contactors should be open or closed normally	Check that the contactors are open or closed normally.	☐ Pass ☐ Fail	

6 Conclusion

EV Model	Required Voltage (V)	Required Current (A)	Output Voltage (V)	Output Current (A)	Remark

Conclusion	Remark
☐ Pass ☐ Fail	

Commissioning Engineer: Customer:

Date:

Appendix 4 Required tools for commission

Name	Usage	Picture
Laptop	Parameter setting and intercept the passage	
P6 small line	M4 board program burning	
J-LINK	Flash program	
232 tool	Intercept message and flash program	
Slotted screwdriver	Fastening screws	
Phillips screwdriver	Fastening screws	
Allen key		
T15 Torx screwdriver		
Screwdriver set		
Wrench		
Multimeter	Electrician measuring appliance	

Name	Usage	Picture
Test pencil	Electrician measuring appliance	
Megohmmeter	Insulation resistance measurement	
Safety signs	Safety signs	
Electrician protective gloves	Safety protective equipment	
Electrician protective rubber shoes		
TF card	Update program	
Ethernet cable	Web setting	
Funnel (optional)	For coolant filling (non-essential, only for low coolant level)	

7 Preventive Maintenance

All Preventive Maintenance (PM) and Corrective Maintenance (CM) activities are provided for information only. PTOs are not required to learn or assess these activities for competency or qualification purposes, as evaluation and qualification are handled by the OEM.

Before you start any preventive maintenance on your EVSE, make sure you have read and understand all the safety instructions. This is important to prevent any accidents or injuries.

All preventive maintenance should be carried out by authorized technician. This is important to ensure that the maintenance is done correctly and safely.

The specific preventive maintenance tasks that should be performed differs from the type of EVSE. However, some common tasks include:

- Inspecting the EVSE for signs of damage or wear and tear.
- Cleaning the EVSE and its components.
- Testing the EVSE to ensure that it is functioning properly.

The following check items, as well as the frequency (per year) and working hours are based on Chinese experience and are provided for reference. Overseas regions can adjust them according to local requirements and actual conditions.

Items	Frequency	Working hours	Remark
External and environmental checks	Yearly	10min/site	
Functionality checks and tests		10min/unit	
Cleaning		10min/unit	
Electrical checks and tests		15min/unit	
New Electric Vehicles (EV) / e-buses		10min/unit	

Table 7-1 Preventive maintenance

7.1 External and environmental checks

Requirements: EV Charger power TURN-ON at isolator. It is necessary to identify the dangerous source of the charging site and report the hidden safety hazard.
Working hours: 10min/site
Frequency: Yearly

Content and Specification	Check Method	Conclusion	Remark
Installed outside hazardous zones where flammable or combustible gas or material may be presented	Visual	☐ Pass ☐ Fail	
Enclosure is not dented, damaged, corroded or in any rusty condition.	Visual	☐ Pass ☐ Fail	
Space around the EV Charger is adequate for easy access and maintenance work.	Visual	☐ Pass ☐ Fail	
Sealing rubber of all doors are in order, and doors including lockset (if any) can be opened and closed easily.	Visual	☐ Pass ☐ Fail	
No sign of insects inside EV Charger. Openings or vents are not blocked, no excess foreign particles.	Visual	☐ Pass ☐ Fail	
Detachable parts are not loose or falling off and not in a rusty condition.	Visual	☐ Pass ☐ Fail	
No visible moisture, waterlogging or burnt marks at the EV Charger and connector charging pins.	Visual	☐ Pass ☐ Fail	
Floor or wall mounting of EV Charger remains rigid and strong.	Visual	☐ Pass ☐ Fail	
Vehicle connector cable, mounting and support is secured and not damaged.	Visual	☐ Pass ☐ Fail	
Electrical warning labels is clear and prominent.	Visual	☐ Pass ☐ Fail	
Source of Distribution Box (DB) for EV Charger is clearly labelled and electrical source DB is accessible for operation.	Visual	☐ Pass ☐ Fail	
Bollards or continuous kerb(s) or other means of crash protection is installed to provide adequate protection against moving vehicles.	Visual	☐ Pass ☐ Fail	
Charger specification plate is clear, legible, and prominent according local requirement.	Visual	☐ Pass ☐ Fail	

RRP or Operator of EVSE's contact details label is legible and prominent	Visual	☐ Pass ☐ Fail	
Fail-safe emergency stop button (in red and yellow) is prominent and not damaged. For outdoor installation it shall be weatherproof. Clear directional signs shall be provided for multiple charger installations.	Visual	☐ Pass ☐ Fail	
Adequate lighting for charging operation.	Visual	☐ Pass ☐ Fail	
EV Charger's touchscreen and all User Interface accessories (e.g. press button, RFID reader etc.) are not damaged and are working properly.	Manually	☐ Pass ☐ Fail	
Incoming power supply cable including circuit protective conductor connections and termination(s) are properly made and tightened.	Visual	☐ Pass ☐ Fail	
Measurement of Proximity Pin -Protective Earth resistance value and to be compared with the given value in the IEC Standard.	PP-PE: (Ohm)	☐ Pass ☐ Fail	
Equipped with fire extinguishers and other safety facilities. Safety facilities are available.	Visual	☐ Pass ☐ Fail	
The nameplate is complete, correct, and firm.	Visual	☐ Pass ☐ Fail	
The fireproof mud or sealing boards is complete, correct, and firm	Visual	☐ Pass ☐ Fail	
The door cannot be opened when it is properly closed and locked.	Visual	☐ Pass ☐ Fail	
No water leakage, condensation, rust or damage inside the EVSE	Visual	☐ Pass ☐ Fail	

Table 7-2 External and environmental checks

7.2 Functionality checks and tests

Requirements: EV Charger power TURN-ON at isolator.
Working hours: 10min/unit
Frequency: Yearly

Content and Specification	Check Method	Conclusion	Remark
Perform the sequence of normal start and stop on every charging point.	Manually	☐ Pass ☐ Fail	
While charging, check EV ventilation fan (if any) is working.	Manually	☐ Pass ☐ Fail	
While charging, test all the fail-safe emergency stop button(s) to ensure it is functioning. (EVSE shall reset to state A upon releasing)	Manually	☐ Pass ☐ Fail	
Perform control pilot short fault simulation for every charging point. (EV Charger shall reset to state A upon releasing)	Manually	☐ Pass ☐ Fail	
Door interlock test - Open respective door of the charger and all its peripherals and the system shall show that the charger is unavailable.	Manually	☐ Pass ☐ Fail	
Emergency stop check - Start charging the EV, press open one of the doors during charging. Did the charge session stop immediately and did the system display an error screen.	Manually	☐ Pass ☐ Fail	
Surge protection device - Test/Confirm that protection is still active and available.	Manually	☐ Pass ☐ Fail	
Verify that all connections of CCS cables are tightened.	Manually	☐ Pass ☐ Fail	
All LED indicators work normally	Visual	☐ Pass ☐ Fail	
The HMI touchscreen displays normally, and touch function is workable.	Visual	☐ Pass ☐ Fail	
Corresponding DC output contactor ought to be connected or disconnected when you configure in web panel.	Web Debug mode	☐ Pass ☐ Fail	

Table 7-3 Functionality checks and tests

7.3 Charging connector inspection

Requirements: EVSE should be turned off.
Working hours: 20min/unit
Frequency: Yearly (Based on real situation)

Content and Specification	Check Method	Conclusion	Remark
Check if there is any damaged or burning parts on the charging connectors. If yes, please replace connector cable immediately.	Manually	☐ Pass ☐ Fail	
Check if there are any foreign particles or water stains in the charging connector head. If yes, take out the foreign particle with a stick shaped object to make sure the interior of the connector head is clean and tidy.	Manually	☐ Pass ☐ Fail	
Check whether the spring inside the gun head is deformed or hot melted. If yes, please replace connector cable immediately.	Manually	☐ Pass ☐ Fail	
Check whether the cable of the charging connector is wrinkled, cracked, and whether the cable at the end of the connector has sheathing off， If yes, please replace connector cable immediately.	Manually	☐ Pass ☐ Fail	
Check whether the waterproof rubber pad of the connector head has potential water leakage caused by cracking， If yes, please replace connector cable immediately.	Manually	☐ Pass ☐ Fail	
Check whether the connector head fixing screw is missing or loose, if so, tighten the screw before use.	Manually	☐ Pass ☐ Fail	

Table 7-4 Charging connector inspection

7.4 Electrical checks and tests

Requirements: To be performed by skilled person

Working hours: 20min/unit

Frequency: Yearly

Content and Specification	Check Method	Conclusion	Remark
Record the incoming power supply and charging cable insulation resistance value is more than 10M ohm.	Manually	☐ Pass ☐ Fail	
Rating of incoming cable from source DB & charging cable are adequate for maximum rated charging current.	Manually	☐ Pass ☐ Fail	
Perform earth loon impedance test and record value (< 0.1 ohm)	Manually	☐ Pass ☐ Fail	

Table 7-5 Electrical checks and tests

7.5 New Electric Vehicles (EV) / e-buses interoperability tests

Requirements: EVSE should be turned on.

Working hours: 15min/unit

Frequency: Yearly

Content and Specification	Check Method	Conclusion	Remark
Interoperability coordination meetings	Manually	☐ Pass ☐ Fail	
Interoperability test	Manually	☐ Pass ☐ Fail	
Interoperability issue handling and solution	Manually	☐ Pass ☐ Fail	

Table 7-6 New Electric Vehicles (EV) / e-buses interoperability tests

7.6 Charging test

Once you have completed all of the required checks above, refer to the user manual and do the following steps:

Use the designated app or scan the QR code or swipe the card to start the charging process.

If the charging process is successful, then your EVSE is working properly. If you have any problems, please contact the manufacturer or a authorized technician.

EV Model	CPID	Required Voltage (V)	Required Current (A)	Output Voltage (V)	Output Current (A)	Conclusion
						☐ Pass ☐ Fail
						☐ Pass ☐ Fail
						☐ Pass ☐ Fail
						☐ Pass ☐ Fail
						☐ Pass ☐ Fail
						☐ Pass ☐ Fail
						☐ Pass ☐ Fail
						☐ Pass ☐ Fail
						☐ Pass ☐ Fail
						☐ Pass ☐ Fail

Table 7-7 Charging test

8 Corrective Maintenance

8.1 Could not access web panel

Issue: Could not access web panel.

Possible causes:

- Enter the wrong website address.
- The IP address of the laptop is not configured correctly.
- The network connection of the network cable is unstable.
- There is hardware issue with the AM62 board or switch.

Solution:

(1) Check the IP address setting of the laptop.

(2) Check the connection of the network cable.

(3) Check if the network cable or the laptop is normal.

(4) Try to change a browser (Edge and Chrome are recommended) and clear the cache.

(5) Use SD card to upgrade AM62 board again.

(6) Try to replace the AM62 board.

Figure 8-1 The AM62 core board and the AM62 board

8.2 No network connection

Issue: EVSE is offline on the web panel in Network State.

Possible causes:

- The SIM card is not correctly inserted.
- Incorrect APN configuration.
- Unstable 4G signal.
- SIM card is out of charge.
- Non-supported frequency band.
- Unstable Wi-Fi signal.
- Unstable network connection.
- The 4G communication module or the AM62 board is faulty.

Solution:

- If the EVSE is connected to the network by SIM card:

(1) Power off and check whether the SIM card is correctly inserted. Reboot the system if inserting the SIM card while the EVSE is power on.

(2) Check whether the SIM card is workable and whether the configurations in the web panel are correct.

Figure 8-2 Configure parameters of the SIM card

(3) Check “Strength of 4G” in web panel. (If CSQ<18, the site signal is not stable)

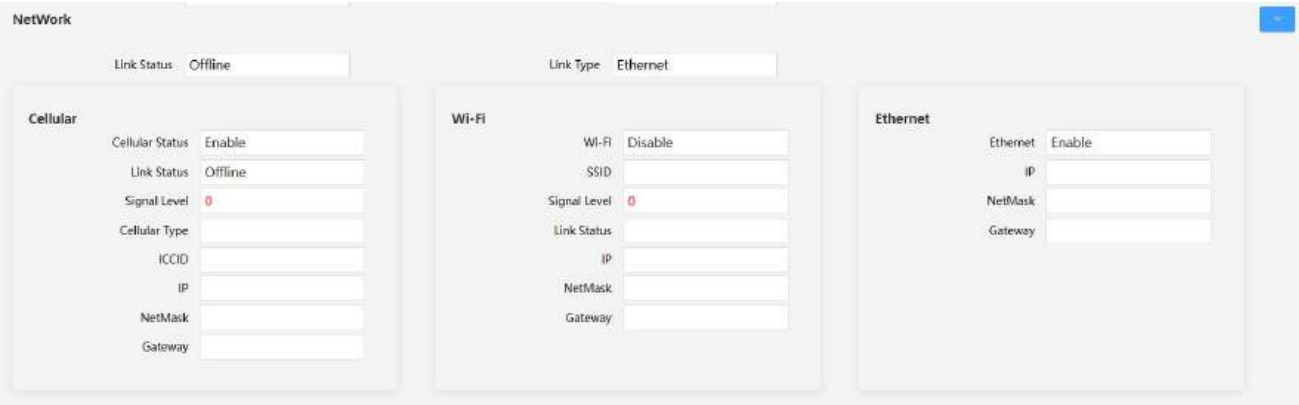

Figure 8-3 Network state

- If the EVSE is connected to the network by Wi-Fi or by Ethernet:

(1) Connect your mobile phone to this Wi-Fi or connect the network cable to your laptop to check whether it is connected to the network.

(2) Try to replace the 4G communication board or the AM62 board.

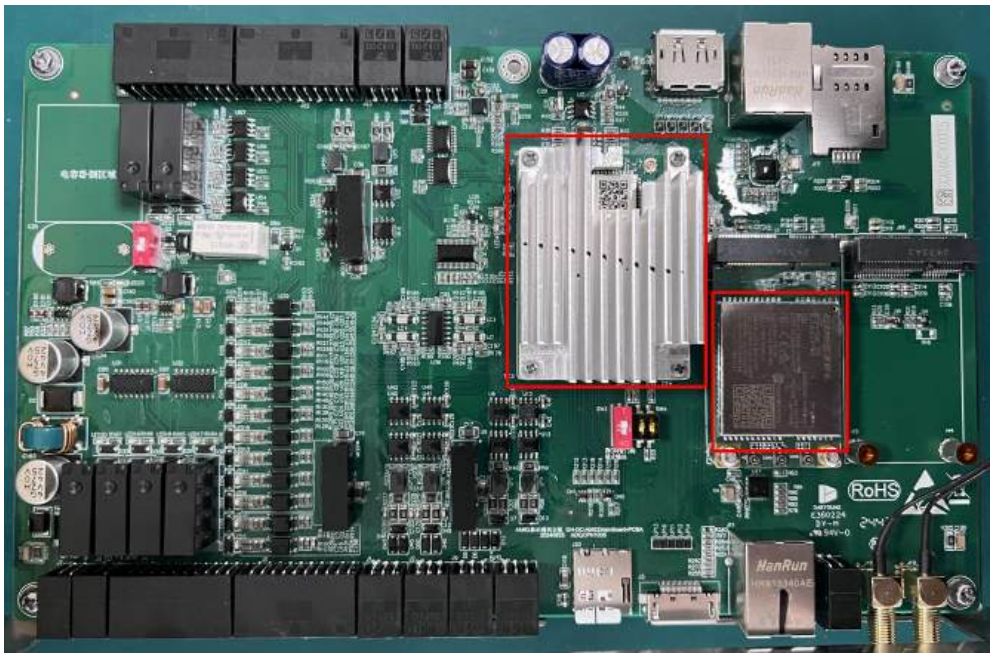

Figure 8-4 The location of the AM62 core board and the 4G communication board

8.3 EVSE is offline

Issue:

- EVSE is offline in the backend.
- OCPP status is Offline in the web panel.

Figure 8-5 Status of OCPP

Possible causes:

- The EVSE lost power.
- The EVSE is not connected to the network successfully.
- Configurations are not set correctly in the web panel or the backend.
- The 4G communication module or the AM62 board is faulty.

Solution:

(1) Check whether the EVSE is power-on. If not, check whether there is power.

(2) Check the network connection.

(3) Check the OCPP backend and the ID configuration in the web panel.

(4) Check charger status in OCPP backend, confirm the OCPP backend is normal.

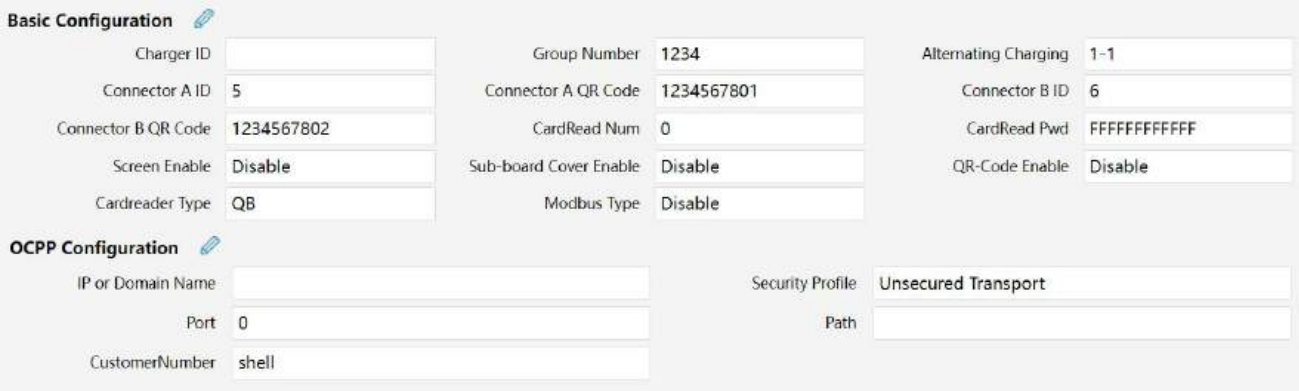

Figure 8-6 Configurations of CPID and OCPP

8.4 Power module communication fault

Issue: Power module communication fault

Possible causes:

- The power module or the power module socket is faulty.
- The MCCB is faulty or tripped.
- The AC contactor is faulty.
- The power module address is not set correctly.
- Power module configurations are wrong.

Solution:

(1) Check the power module addresses and configurations in the web panel.

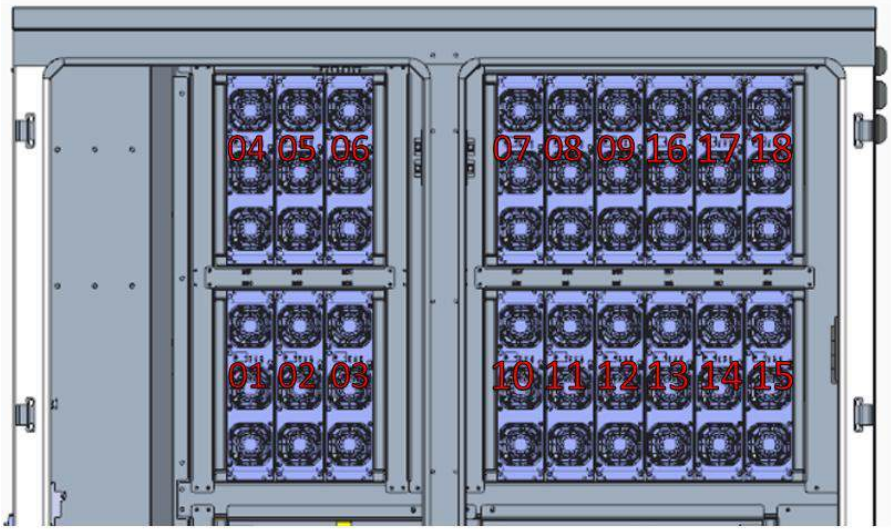

Figure 8-7 Addresses of the power module

Figure 8-8 Configure the power modules in the web panel

(2) Check whether some of the power module fault light is on. Follow the checklist below to check.

Indicator light	Status	Status description	Solutions
Alarm indicator (Yellow)	On	• Power derates due to missing phrase of AC input and temperature • Irregular current sharing	Check if the input wiring and power distribution switch of the charger or the charging stack cabinet are normal. If the input wiring and power distribution switch of the charger or the charging stack cabinet are normal, but the alarm still exists, replace it
	Flashing	Operating under manual mode	Contact your dealer or service team for help
Alarm indicator (Red)	On	• EEPROM fault • Fan drive fault • AC Input over/ under voltage • Missing phrase for AC input • Over temperature inside • Irregular communication for primary and secondary side • Output over/under voltage • AC over voltage separation • Serial number duplication	Replace the power module
	Flashing	Fans don't work	Contact your dealer or service team for help

Table 8-1 Power module fault light checklist

(3) Measure the input voltage of the EVSE. If abnormal, contact the installation team to check.

(4) If the input power is normal, check whether the MCCB is tripped. If so, turn it on. If not, measure the input and output voltage (AC 480V) of the MCCB. If there is no output, replace the MCCB.

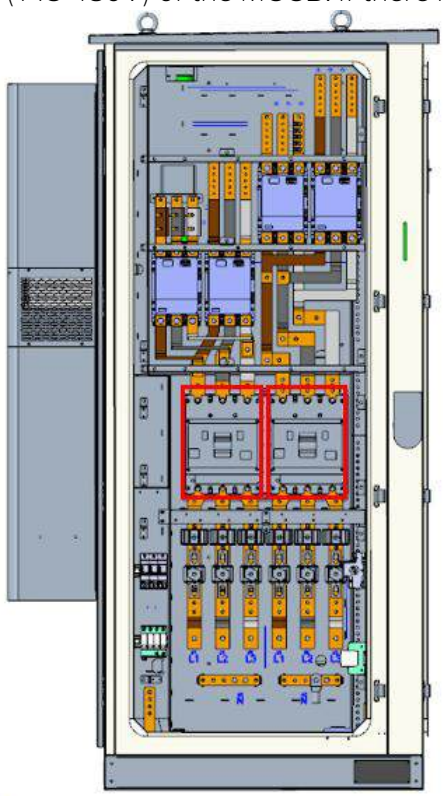

Figure 8-9 MCCBs of the EVSE

(5) If the MCCB is normal, close the AC contactor in web panel (disable the door sensor and close the AC contactor). Measure the input and output voltage of each AC contactor (AC 4800V). If there is no output in each AC contactor, check the AC contactor control signal first; If one AC contactor does not have output voltage, measure whether there is 480V to the AC contactor . If so, check the control loop of the AC contactor, If the control loop is normal, replace the AC contactor.

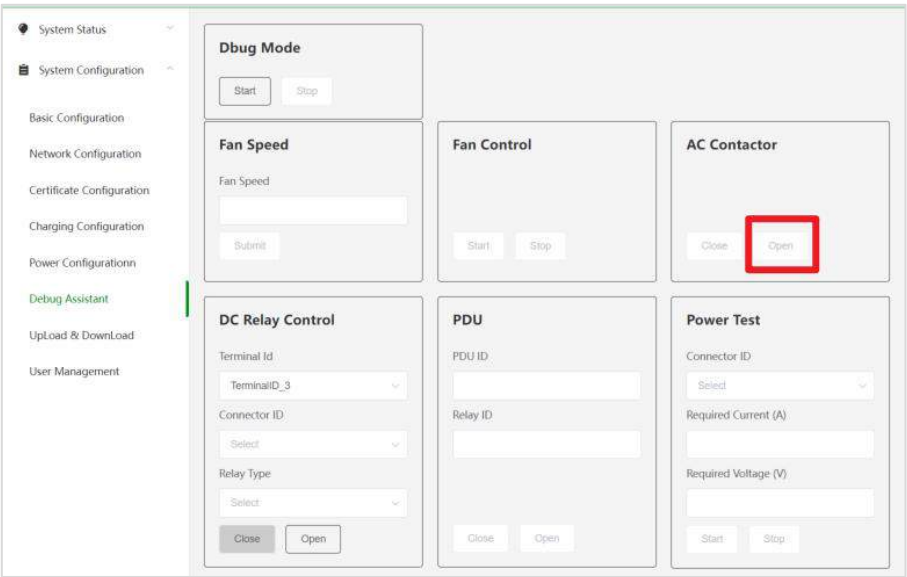

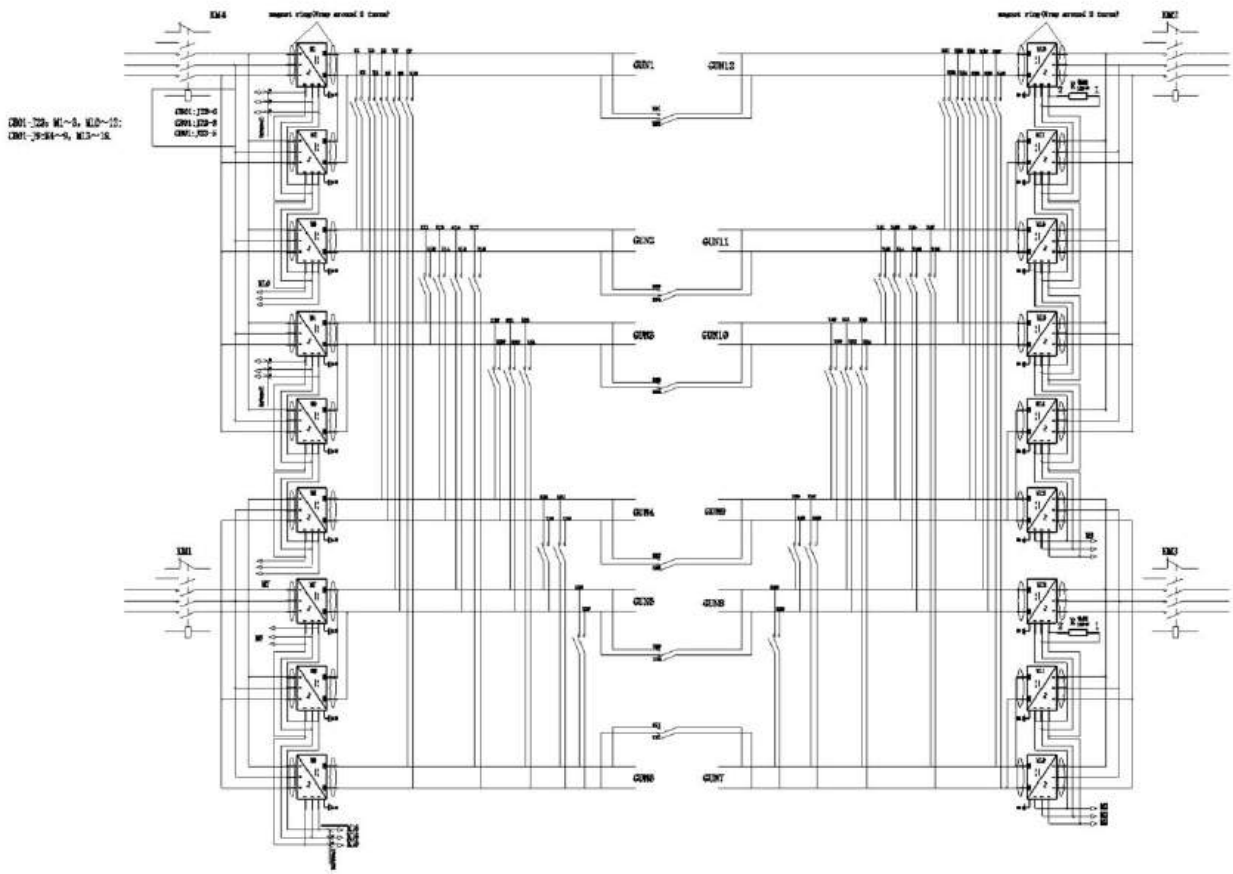

Figure 8-10 Configurations for the AC contactor in web panel

(6) If the AC contactor is normal, turn on the AC contactor in the web panel. Check the status of power modules in web panel. If the status of one of the power modules is offline, plug in this power module one more time or swap it with another power module. If the same power module remains offline, replace the faulty power module.

(7) If not, measure the resistance between CANL and CANH of the power module socket, the normal resistance is 60Ω. If abnormal, remove the J23 port on AM62 board (CB01)

(8) If modules at addresses 1/3/7/9/13/15/16/18 lose connection, measure the resistance between CANL and CANH of power module socket, the normal resistance is 120Ω. If abnormal, replace the 120Ω resistor on the power module socket. Measure the resistance between 1&4 pin of J23 port on AM62 board, the normal resistance is 120Ω. If abnormal, replace the AM62 board.

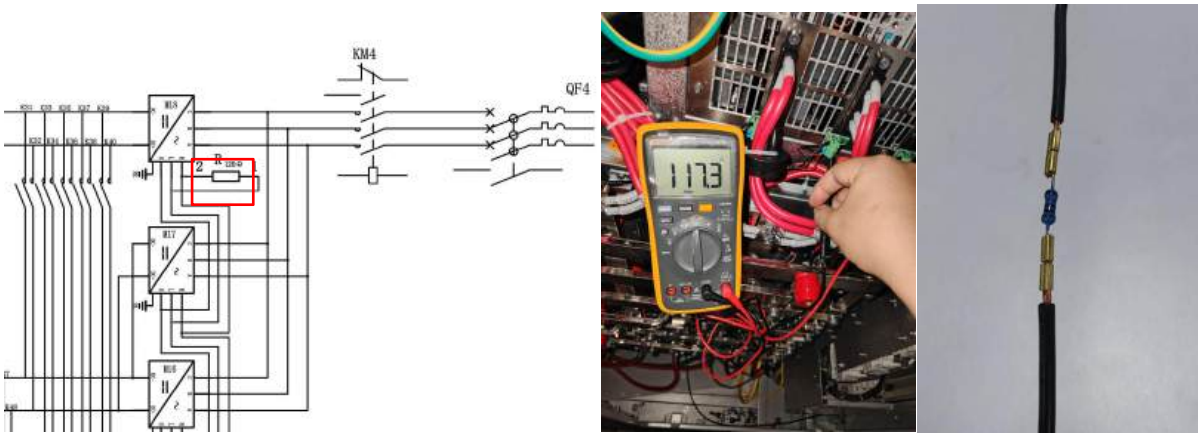

Figure 8-11 Measure the resistance

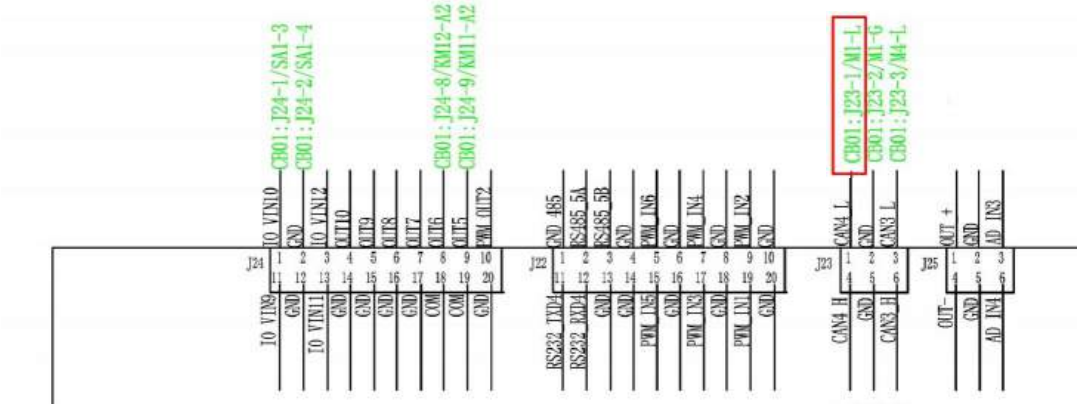

Figure 8-12 Power communication port on the mainboard

(9) If modules at addresses 4/6/10/12 lose connection, measure the resistance between CANL and CANH of power module socket, the normal resistance is 120Ω. If abnormal, replace the 120Ω resistor on the power module socket. Measure the resistance between 3&6 pin of J23 port on AM62 board, the normal resistance is 120Ω. If abnormal, replace the AM62 board.

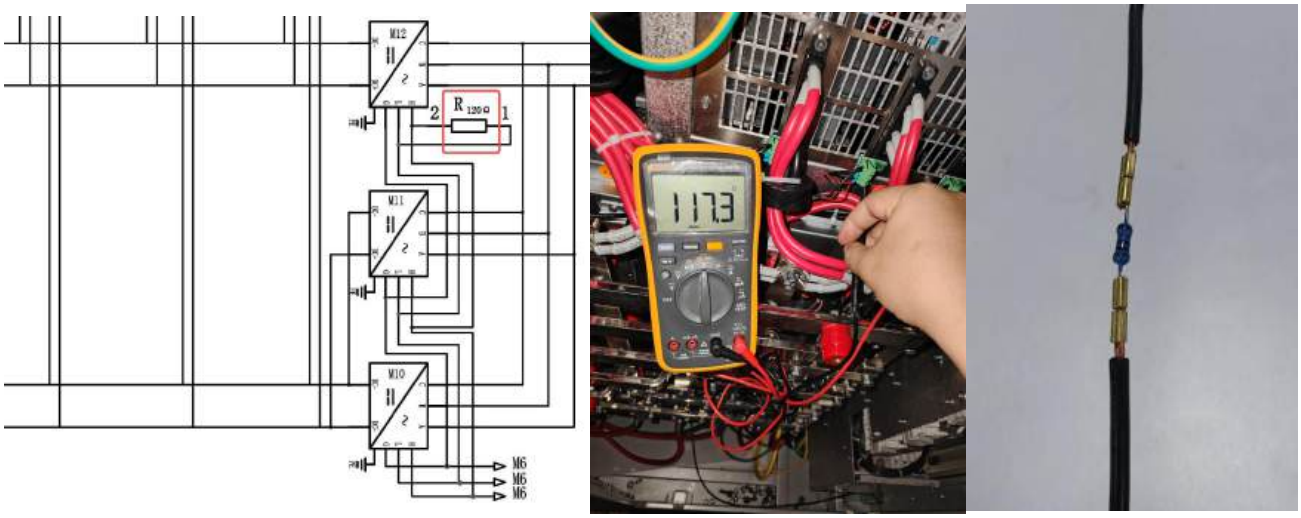

Figure 8-13 Measure the resistance

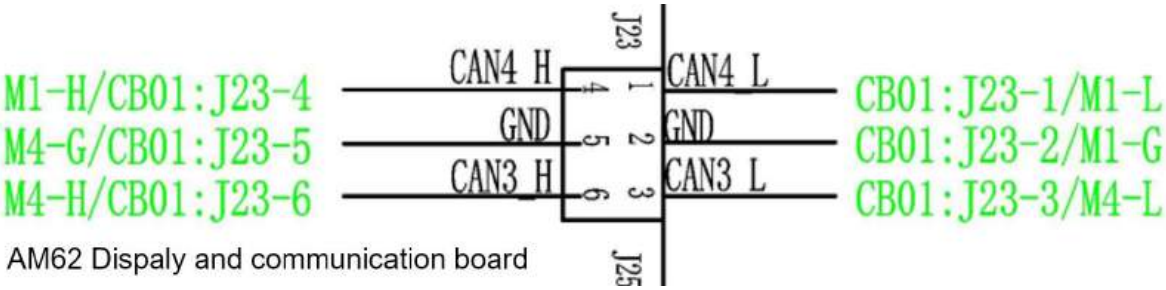

Figure 8-14 Power communication port on the mainboard

8.5 No response after plug in

Phenomenon: No response after plug in the charging connector

Possible causes:

- Charging connector faulty.
- Abnormal CP voltage.
- Abnormal wire connection of the SECC board.

Solution:

(1) Check whether there is water, stone, or foreign materials inside the charging connector head. If so, clean or dry it.

(2) Measure the voltage between CP and PE when the charging connector is not plugged in, the normal voltage is 12V. Measure the voltage between CP and PE inside of the EVSE when plug in the charging connector into the EV, the normal voltage is 9V. If the voltage is abnormal, check the wiring on the SECC board. Correct it or replace the SECC board.

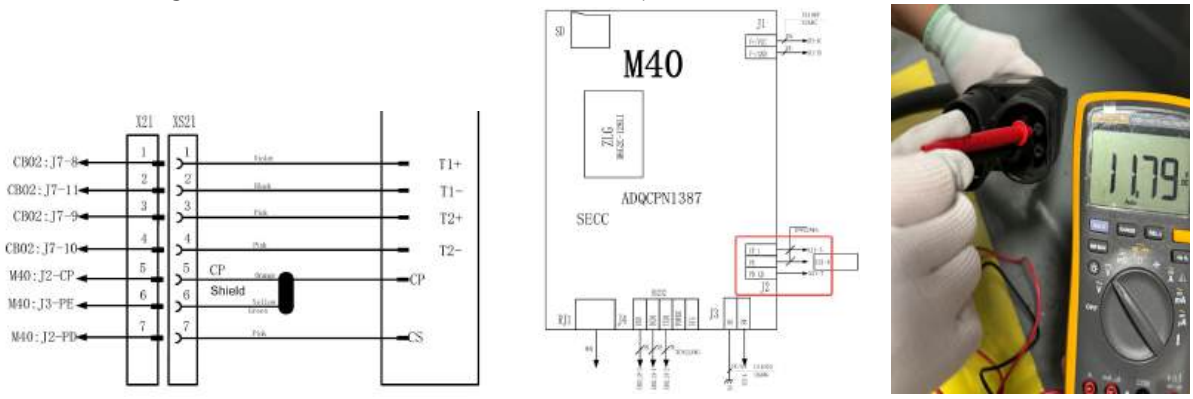

Figure 8-15 Measure the voltage between CP and PE

(3) Measure the resistance between PP and PE, the normal resistance is 1.45kΩ. If abnormal, replace the charging connector.

Figure 8-16 Measure the voltage between PE and PP

(4) Check the wiring between the SECC board and the M4 board (CB02)..

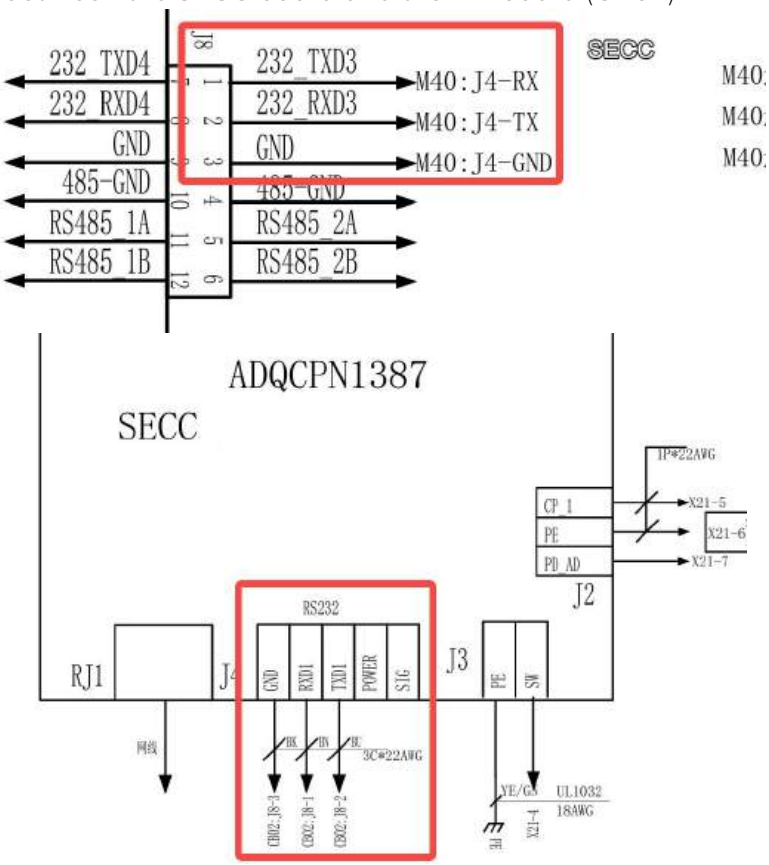

Figure 8-17 Wiring between the SECC board and the M4 board (CB02)

8.6 Meter communication failure

Phenomenon: Meter communication light is off, and the LED indicator is always red.

Possible cause: The RS485 communication between the AM62 board (CB01) and the DC Meter is abnormal.

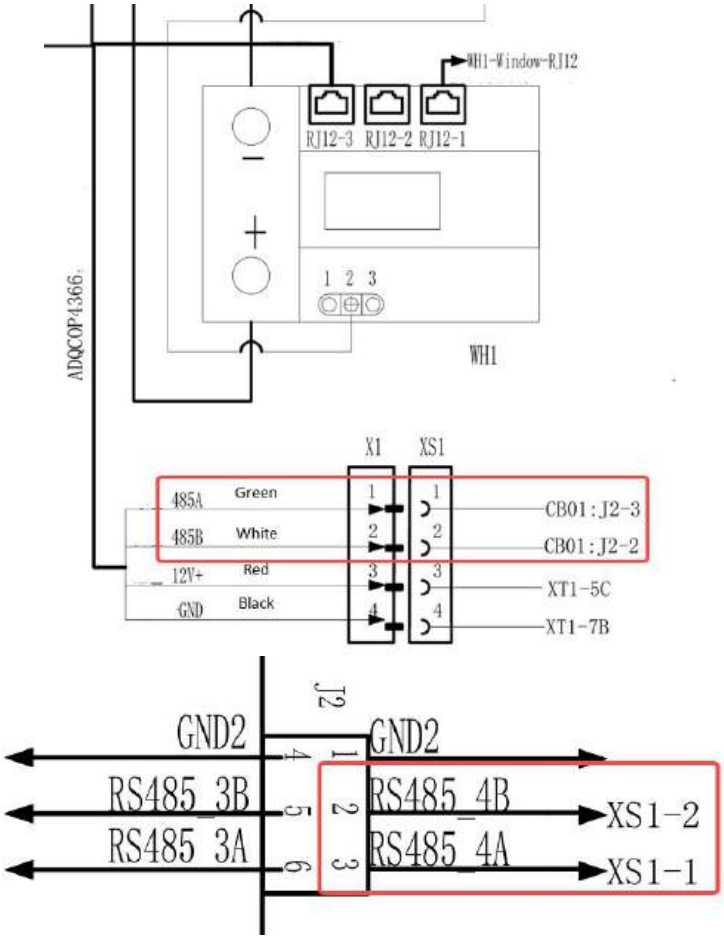

Figure 8-18 RS485 communication between the AM62 board (CB01) and the meter

Solution:

(1) Use a multimeter to check the circuit of the AM62 board (CB01) 485 communication ports A and B corresponding to the A and B interface of the meter. If there is anything abnormal, replace the communication wire or correct the wiring.

(2) Check the meter communication logs to identify the problem, and replace the faulty components as needed.

Note: If the issue persists even after following these steps, please contact the customer service for further assistance.

8.7 Input under-voltage fault

Possible causes:

- The input voltage is over 480V-10%.
- The power module is faulty.

Solution:

(1) Measure the input voltage of the EVSE, if abnormal, contact the installation team.

(2) Monitor whether there are any errors with the power modules during charging. If so, replace the faulty power module.

8.8 Input over-voltage fault

Possible causes:

- The input voltage is over 480V+10%.
- The power module is faulty.

Solution:

(1) Measure the input voltage of the EVSE, if abnormal, contact the installation team.

(2) Monitor whether there are any errors with the power modules during charging. If so, replace the faulty power module.

8.9 Insulation fault

Possible causes:

- The wires between M4 board and Copper busbar are loosen or faulty
- The M4 Board is faulty
- The power model is faulty
- The insulation resistance of the charging connector is less than 100Ω/V
- The insulation resistance of the DC cable which between power cabinet and user unit is less than 100Ω/V
- Electric vehicles faulty with insulation issues.

Solution:

Please power off the power cabinet and user unit before testing the insulation value.

- If only one charging connector reports the insulation fault regularly.

(1) Check the wires between M4 board and Copper busbar, make sure all the wires are properly connected.

(2) Replace with a new M4 board and test charging again.

(3) Remove the charging connector from the copper busbar. Check the insulation value between charging connector DC positive cable (DC negative cable) and PE with the megohmmeter. If the insulation value is less than 100Ω, please replace the charger connector.

(4) Check the insulation value between the DC input cable to PE inside the user unit. If the insulation value is less than 100Ω/V， please consider the cable is faulty and contact the installer.

- If multiple charging connector A / connector B from different user units are reporting insulation fault and they are connected to same power cabinet. Please consider the power model is faulty.

(1) Analysis the power cabinet log to check whether it report insulation fault when the specific power module is used. If yes, please replace the power module.

Power module

Charging Connector

mod	online	on_off	group	req_vol	req_cur	rsp_vol	rsp_cur	out_vol	out_cur	cur_cap	temp	hl	run_time	dc_ver	pfc_ver	sn	state
1	1	1	1	421400	71300	421400	71300	375168	71387	106990	18	2	86400	13.10.2C.01	13.11.07.21	0300424110620200007	0
2	1	1	1	421400	71300	421400	71300	375684	71365	106850	18	2	90000	13.10.2C.01	13.11.07.21	0300424110620200194	0
3	1	1	2	422100	83333	422100	83333	412131	83460	97378	18	2	100800	13.10.2C.01	13.11.07.21	0300424110620200103	0
4	1	1	2	422100	83333	422100	83333	411672	83444	97488	17	2	90000	13.10.2C.01	13.11.07.21	0300424110620200214	0
5	1	1	2	422100	83333	422100	83333	412183	83405	97365	17	2	100800	13.10.2C.01	13.11.07.21	0300424110620200215	0
6	1	1	4	552200	1000	552200	1000	6125	77	72437	18	1	97200	13.10.2C.01	13.11.07.21	0300424110620200137	0
7	1	1	5	672000	38000	672000	38000	597667	38024	67086	19	1	82800	13.10.2C.01	13.11.07.21	0300424110620200219	0
8	1	1	5	672000	38000	672000	38000	598311	38042	67008	18	1	75600	13.10.2E.06	13.11.07.64	0300425112920500778	0
9	1	1	4	552200	1000	552200	1000	6536	52	72437	18	1	90000	13.10.2E.06	13.11.07.64	0300425112120500519	0
10	1	1	7	387000	96600	387000	96600	353846	96613	113507	19	2	82800	13.10.2C.01	13.11.07.21	0300424110620200118	0
11	0	0	0	387000	96600	0	0	0	0	0	0	0	-1				33556432
12	1	1	8	437000	97500	437000	97500	409353	97550	98054	18	2	90000	13.10.2C.01	13.11.07.21	0300424110620200213	0
13	1	1	9	463800	51600	463800	51600	453917	51659	88383	18	2	104400	13.10.2C.01	13.11.07.21	0300424110620200102	0
14	1	1	9	463800	51600	463800	51600	453603	51665	88440	17	2	100800	13.10.2C.01	13.11.07.21	0300424110620200255	0
15	1	1	15	330886	100	330886	100	341990	0	117424	19	2	93600	13.10.2C.01	13.11.07.21	0300424110620200092	0
16	1	1	11	672200	64500	672200	64500	603166	64566	66472	18	1	100800	13.10.2C.01	13.11.07.21	0300424110620200243	0
17	1	1	11	672200	64500	672200	64500	603779	64564	66406	17	1	100800	13.10.2E.06	13.11.07.64	0300425112920500783	0
18	1	1	8	437000	97500	437000	97500	409377	97574	98082	18	2	72000	13.10.2C.01	13.11.07.21	0300424110620200019	0

8.10 User unit door is open

Solution:

(1) Check if the door is open.

(2) Inspect the door switch circuit for abnormalities, such as fault connections or abnormal terminal ports. If any issues are found, rectify the wiring or replace the AM62 board.

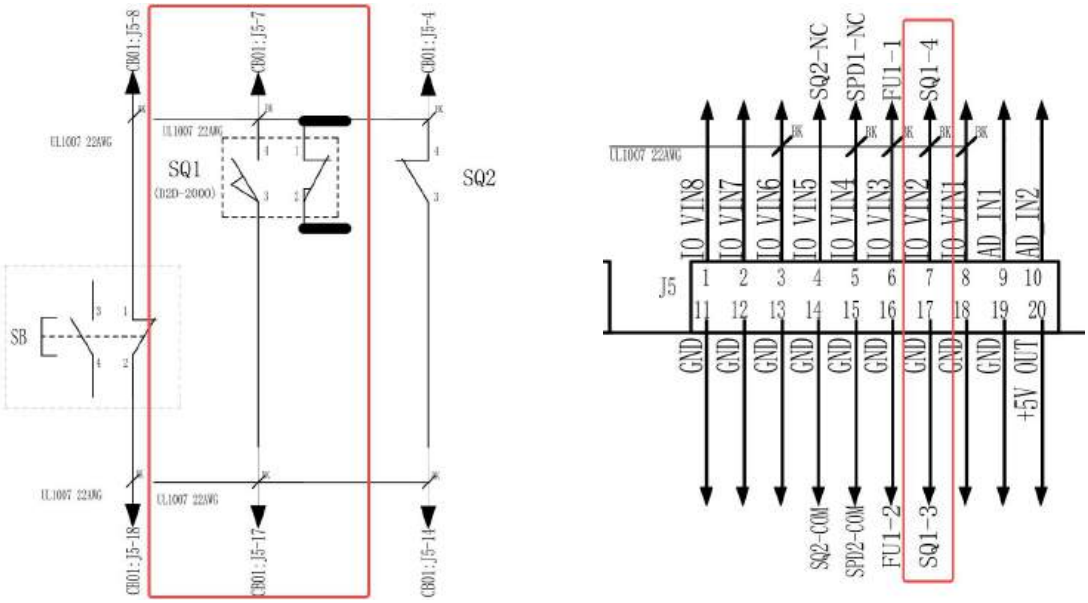

Figure 8-19 Circuit of the door switch

(3) Manually close the door switch to check if its function is normal.

(4) Adjust the switch position in case the door does not touch the switch properly when closed.

(5) Use a multimeter to check if the door switches can properly close. If any issues are found, replace the door switch.

8.11 No effective current output

Phenomenon: The charger is receiving the required voltage and current, but there is no output current of the charging connector.

Possible causes:

- The output contactor is faulty.
- The circuit is abnormal.
- The fuse protector is faulty.
- The power module is faulty.
- The charging connector is faulty
- There is an issue with the EV.

Solution:

(1) Check whether the DC contactor circuit is correct. Verify if there is a signal in the contactor coil control line after starting. If there is no signal, change the circuit to the correct one.

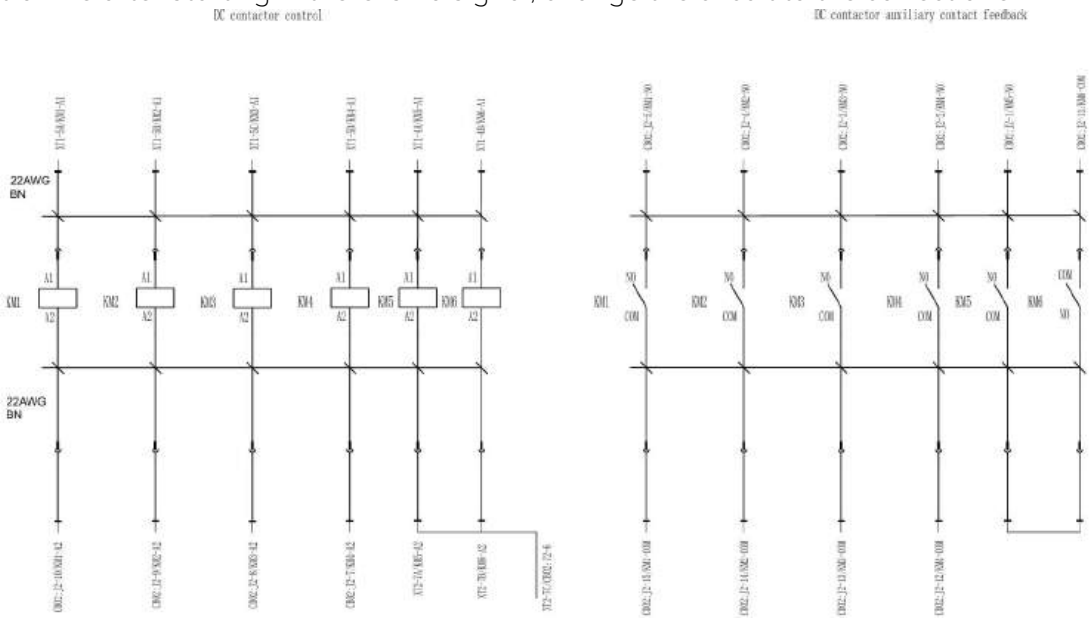

Figure 8-20 Circuit diagram DC contactor control

(2) Use a multimeter to measure whether the two sides of the DC contactor are conducting after receiving the pull-in signal. If not, replace the DC contactor.

(3) Use a multimeter to check whether the fuse is conducting. If not, replace the fuse.

8.12 No response after swiping a card

Possible causes:

- Wrong configuration.
- UID of the RFID card is not uploaded in the backend.
- Incompatible format of the card.
- The card reader is faulty.

Solution:

(1) Check the configuration in the web panel.

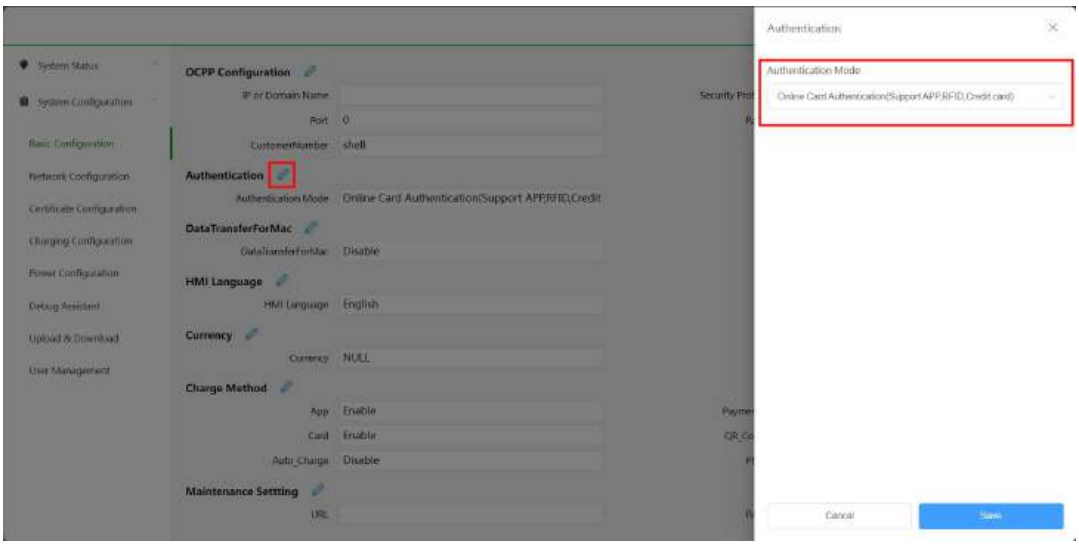

Figure 8-21 Authentication method in the web panel

(2) If EVSE is set in “Backend Authentication” mode, make sure the UID of the RFID card is uploaded in the backend by the backend supplier.

(3) Swipe the RFID card on the card reader for 2 seconds and then remove it.

(4) Replace the RFID card reader.

(5) If the issue still exists, send the log file and the specification of the RFID card to StarCharge for analysis.

8.13 Cannot reach the maximum output capacity

Solution:

(1) During the charging process, check the details of the power modules and verify if the indicator lights of the power modules are normal. Replace new power module if faulty.

(2) Check the parameter settings and ensure that the maximum output voltage and the current are set correctly.

8.14 Cooling fan malfunction

Possible causes: The cooling fan does not work during charging, resulting in abnormal heat dissipation and a decrease in charging current.

Solution:

(1) Check whether the power line of the fan is loose, short-circuited, or open-circuited. If any abnormalities are found, rectify the wiring.

(2) Check if the power supply to the fan is normal. If the power supply is abnormal, check the connection of the environment board port or related control relays. If needed, replace the mainboard.

8.15 Power supply is normal, PCB boards are not on

Solution:

(1) Check whether the power line is loose, short-circuited, or open-circuited. If any abnormalities are found, rectify the wiring.

(2) Check whether the output of the corresponding power supply unit (PSU) is normal. If it is abnormal, check whether the PSU is faulty or other components on the output circuit are faulty. Replace the faulty components.

8.16 Output over current

Possible cause: The output current is greater than the set current.

Solution:

(1) Check whether the output of the power modules is normal.

(2) Contact with StarCharge to update the firmware.

8.17 With voltage but no current

Possible cause: After starting charging, the charging connector outputs voltage but no current.

Solution:

(1) A faulty power module may impact the output of other functioning modules during charging. Identify the problematic module by examining its details and observe if its indicator is flashing, replace faulty power modules.

(2) The vehicle high-voltage switch relay or charger's DC output contactor may not be attracted. Measure the voltage of the charger's DC output contactor from left to right. If the measured voltage is the set voltage transmitted by the vehicle, the vehicle relay is not attracted. If the module output voltage and the actual battery voltage of the vehicle can be measured, the charger DC contactor is not attracted. Determine whether the M4 board (CB02) or the DC contactor is faulty by measuring whether the DC contactor has a 12V power supply. Replace the faulty component.

(3) If the hardware is normal, intercept the communication message between the charger and the EV and send it to StarCharge.

8.18 MCCB disconnected

Solution:

(1) Disconnect the upstream power supply, make sure there is no short circuit fault at the back of the MCCB, confirm that the appearance of the MCCB is not damaged, and that the leakage indicator is not protruding. If the appearance of the MCCB is damaged, please replace it with a new one in a timely manner.

(2) Restore the upstream power supply, confirm that the input voltage is 480V (±10%), and reclose the MCCB.

(3) Press the leakage test button to confirm that the MCCB is correctly tripped.

(4) Reclose the MCCB.

8.19 Input surge protection alarm

Solution: Check the color of the indicator window on the surge protective device (SPD).

(1) If the indication window is red, replace a new SPD in time.

(2) If the indication window is green, please check whether the signal line from the SPD to the control board is normal according to figure below.

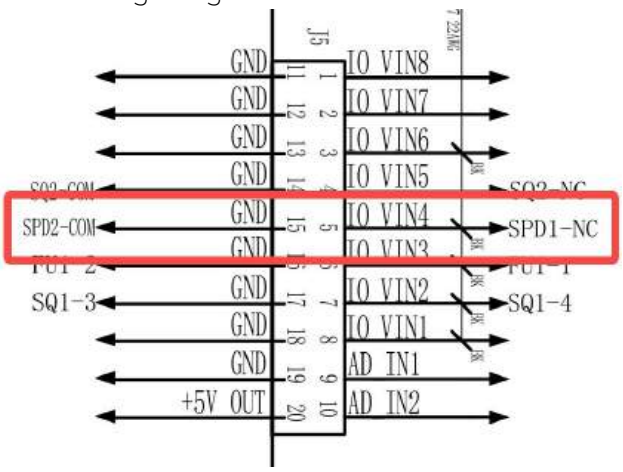

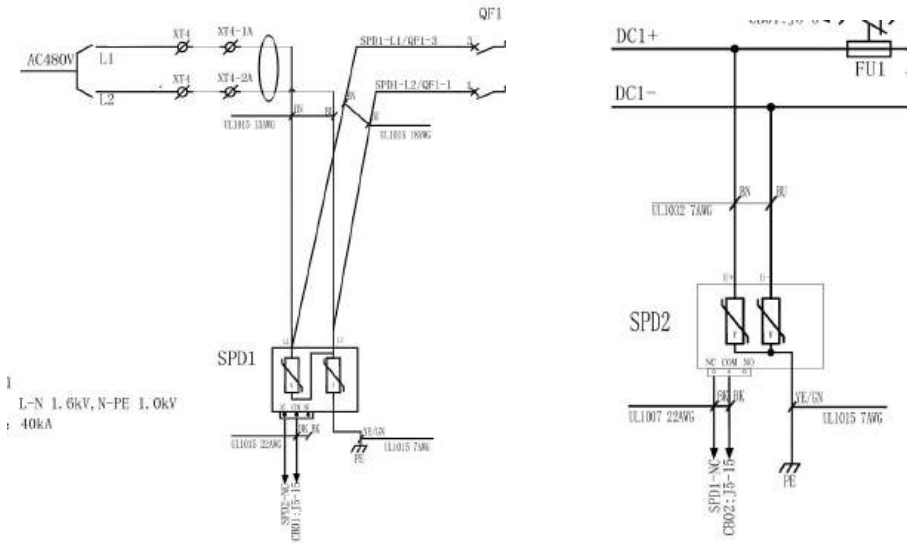

9 Technical specifications

9.1 Technical data

9.1.1 General parameters

Product name	Triton V2 UL Natural-cooling Dispenser
Product models	DC3000AN601926

9.1.2 Input parameters and grid parameters

Rated Input power	480V/2P+PE /2A 60Hz
Power factor	≥0.99 @ full load
Total harmonic current	≤5% @ more than half a load
Rectification efficiency	≥95% @ full load
Earthing system	TN-S, TN-C-S, TT

9.1.3 Output parameters

Output current	300A DC
Output voltage	150 to 1000V DC

9.1.4 Environmental parameters

Operating temperature	-30℃ to +50℃
Storage temperature	-40℃ to +70℃
Relative Humidity	5% to 95%
Altitude	≤2000m
Dust level	≤1 mg/m³
Corrosive substance	No pollutants, such as salt, acid, smoke, etc.
Vibration	≤1.5mm/s^2
Fire prevention	Do not stack flammable and explosive substances around

9.1.5 Communication parameters

Network interface	Ethernet

9.1.6 User Interface & control

Mechanical button	Emergency stop
Start method	Local plug and charge

9.1.7 Mechanical parameters

Protection level	Type 3R
Cooling method	Natural-cooling
Dimensions (W×H×D)	500×500×300mm
Weight	Approx. 30kg (EVSE without charging cable)

9.2 Required tools

9.2.1 Required tools for installation

Category	Name	Usage	Picture
Cable preparation tool	Electrician knife	Stripping of insulating sheath	
	Cable cutter	Cable cutting	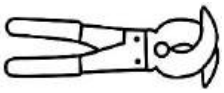
	Hydraulic tongs	Terminal crimping	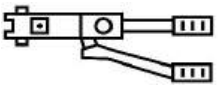
	Wire stripping pliers	Stripping of insulating sheath	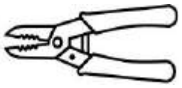
	Hot air gun	Thermal shrinkage of insulating materials	
	Network cable pliers	Crimping of RJ45 connector	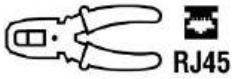
Installation tool	Percussion drill	Drilling hole	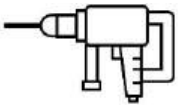
	Open-end wrench (full set)	Installing and removing nuts	
	Cross screwdriver (PH2)	Installing and removing screws	
Installation tool	Torx screwdriver (full set)	Installing and removing screws	
	Hammer	Knocking	

Category	Name	Usage	Picture
Measurement tool	Spirit level	Horizontal measurement	
	Tape measure	Distance measurement	
	Multimeter	Measurement of voltage, current, etc.	
	Megger	Measurement of resistance	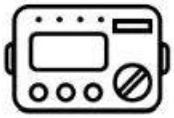
Marking tool	Maker pen	Position making	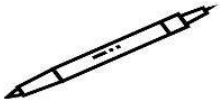
Handling tool	Fork lift	Equipment handling	
Hoisting tool	Crane	Equipment hoisting	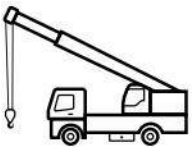

9.2.3 Bolts recommended Torque reference sheet

Bolt Specifications	Torque Range (Unit: N·m)	Recommended Torque (Unit: N·m)
M6	4.0-4.9	4.5
M8	8.8-10.8	10.0
M10	17.7-22.6	20.0
M12	31.4-39.2	36.0
M14	51.0-60.8	55.0
M16	78.3-98.1	83.0
M18	98.0-127.4	115.0
M20	156.9-196.2	180.0
M24	274.6-343.2	320.0

9.4 Compliance and standard adhered to

9.4.1 Certification

Certificates:

9.4.2 Standards

The following documents are the design standards for this product:

Customer service

Preparation:
If you have any questions or problems, please contact the company responsible for performing the electrical installation.

Before contacting Customer Service:
Check the Troubleshooting chapter in the manual.