Z-STANCE®

Operator's Manual
Manuel de l'utilisateur

Models

994158 – Z-STANCE 52
(SN 002000 +)

994159 – Z-STANCE 48
(SN 002000 +)

994160 – Z-STANCE 32
(SN 002000 +)

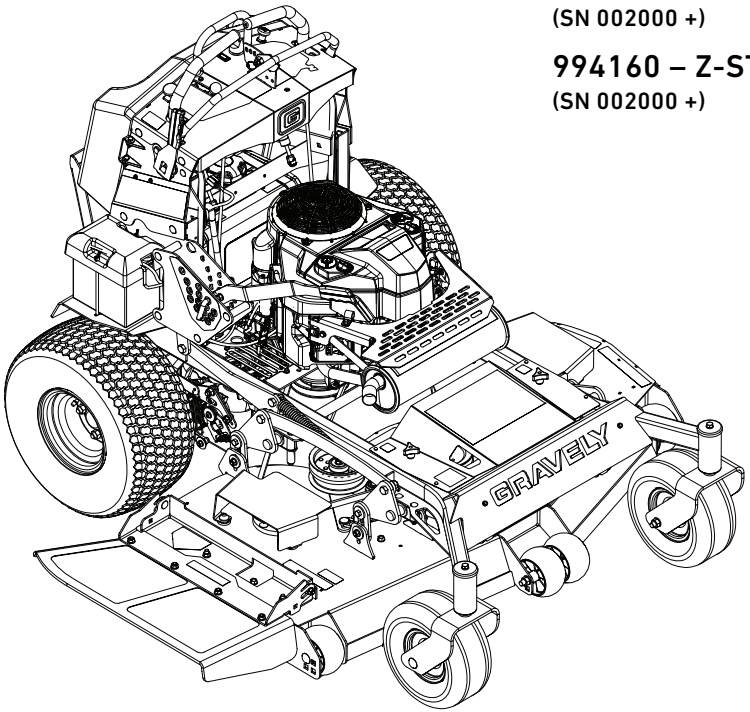

E10 E15 E20 E85

EN ENGLISH

FR FRANÇAIS

09670500A • 11/24
Printed in USA

TABLE OF CONTENTS

WELCOME 1
Register Your Product!. 1
SAFETY. 2
Practices & Laws 2
Emission Control System. 2
Required Operator Training 2
Safety Alert Symbol 2
Signal Words 2
Safety Decals. 3
Safety Rules. 6
SETUP 12
CONTROLS AND FEATURES 13
Ignition Switch 15
Choke Control Knob. 15
Throttle Control Lever 15
Power Take-Off (PTO) Switch 15
Oil Pressure Warning Light 16
Speed Limiting Bar. 16
Deck Lift Lever 16
Transaxle Bypass Levers. 16
Anti-Scalp Wheels 16
Hour Meter 16
Parking Brake Lever 16
Steering Levers 16
Safety Interlock System 16
BEFORE OPERATION 17
Set Cutting Height 17
Transport Unit 18
Release Transport Lock. 18
Set Operator Platform 18
OPERATION 19
Emergency Stopping 19
Start The Engine 19
Operate Unit. 19
Stop The Engine 20
Move Unit Manually 20
MAINTENANCE 21
Service Position 21
Maintenance Schedule 22
Service Parts 22
Check Safety Interlock System 22
Check Hydraulic System 22
Check Tire Pressure 24
Check Mower Blades. 24
Check Parking Brake 25
Clean Battery 25
Charge Battery. 26
Check Fasteners 26
Lubricate Unit. 26
SERVICE AND ADJUSTMENTS 26
Adjust Speed Limiting Bar 26
Adjust Transaxles 27
Adjust Steering Levers. 27
Adjust Unit To Drive Straight 28
Replace Mower Belts. 28
Adjust Anti-Scalp Wheels 30
Adjust Deck Lift 31
Remove / Install Mower Deck 31
Level and Pitch Mower Deck 32
ELECTRICAL SERVICE 33
TROUBLESHOOTING 35
STORAGE 37
Short-Term Storage 37
Long-Term Storage 37
Start-Of-Season Preparation 37
ACCESSORIES. 37
SPECIFICATIONS. 38
WARRANTY 39

WELCOME

Congratulations on your purchase and welcome to the Gravely family! Every machine in the Gravely lineup is designed for long-lasting and unsurpassed performance. We are confident your machine will be part of your family for many years to come.

Have Questions or Need Assistance?
www.gravely.com

A parts manual for your unit is available for free download or purchase at www.gravely.com.
Manual del operador español está disponible para su descarga gratuita o compra en www.gravely.com.

REGISTER YOUR PRODUCT!

It is extremely important to register your product at time of purchase. Product registration activates the warranty and establishes a communication link from AriensCo.

Locate the model and serial number decal on your unit and register those numbers online at www.gravely.com. See Figure 1 for decal location. Be aware that the original selling dealer may have already completed product registration on behalf of the original purchaser.

Model & Serial Number Label

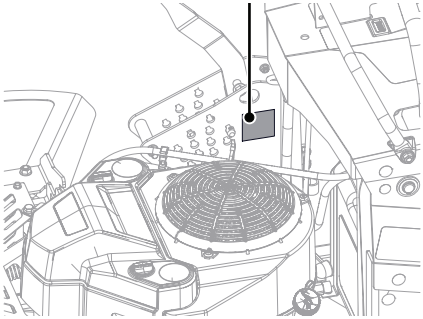

Figure 1

Record model number here.

Record serial number here.

MANUALS

Before operating or servicing the unit, carefully and completely read the manuals provided with the unit. They contain safety instructions and important information about unit controls.

The engine on this unit is covered by a separate manual. Refer to the engine manual for engine service recommendations. Contact the engine manufacturer for a replacement manual if necessary.

Your dealer must review important information in this manual with you before or upon delivery of the unit. It is your responsibility to read and understand all safety precautions and instructions in the manuals. If you do not understand or have difficulty following the instructions, contact your Gravely dealer for assistance. To locate your nearest Gravely dealer, go to www.gravely.com.

DISCLAIMER

Gravely reserves the right to discontinue, make changes to, and add improvements upon its products at any time without public notice or obligation. The descriptions and specifications contained in this manual were in effect at printing. Equipment described in this manual may be optional. Some illustrations may not be applicable to your unit.

SAFETY

Read these safety rules and follow them closely. Failure to follow these rules could lead to loss of control of unit, severe personal injury or death to you or bystanders, or result in damage to property or the machine.

PRACTICES & LAWS

Practice usual and customary safe working precautions. Learn applicable rules and laws in your area. Always follow the practices set forth in this manual.

EMISSION CONTROL SYSTEM

This equipment and/or its engine may include exhaust and evaporative emissions control system components required to meet U.S. Environmental Protection Agency (EPA) and/or California Air Resources Board (CARB) regulations. Tampering with emission controls and components by unauthorized personnel may result in severe fines or penalties. Emission controls and components can only be adjusted by a Gravely dealer or an authorized engine manufacturer's service center. Contact your Gravely Equipment Retailer concerning emission controls and components.

REQUIRED OPERATOR TRAINING



Read and understand the Operator's Manual and decals on the unit. This information is for your safety and the proper use of your equipment. Failure to follow these instructions and warnings may cause death or serious injury. If you have purchased this product from a Gravely dealer, the dealer can provide you with training.

Familiarize yourself and any other operators with all controls and the safe use of the features of this unit. If you loan, rent or sell this product to others, provide them with all manuals.

If you have any questions, please call our customer support line at 920-756-4688 or contact us at www.gravely.com. Do not use this equipment if, after reading the Operator's Manual and the on-board decals, you have any questions about the safe use of this product.

WARNING: AVOID INJURY. This cutting machine is capable of amputating hands and feet and throwing objects. Failure to observe the safety instructions in the manuals and on decals could result in serious injury or death.

SAFETY ALERT SYMBOL

This is the safety alert symbol. It means:

- **ATTENTION!**
- **YOUR SAFETY IS INVOLVED!**

When you see this symbol:

- **BECOME ALERT!**
- **OBEY THE MESSAGE!**

SIGNAL WORDS

The safety alert symbols above and signal words below are used on decals and in this manual.

Read and understand all safety messages.

1. Danger

DANGER: Indicates an IMMINENTLY HAZARDOUS SITUATION! If not avoided, WILL RESULT in death or serious injury.

2. Warning

WARNING: Indicates a POTENTIALLY HAZARDOUS SITUATION! If not avoided, COULD RESULT in death or serious injury.

3. Caution

CAUTION: Indicates a POTENTIALLY HAZARDOUS SITUATION! If not avoided, MAY RESULT in minor or moderate injury. It may also be used to alert against unsafe practices.

4. Notice

NOTICE: Indicates information or procedures that are considered important but not hazard related. If not avoided property damage could result.

5. Important

IMPORTANT: Indicates general reference information worthy of special attention.

SAFETY DECALS

The safety decals on your machine are visual reminders of the important safety information in this manual. All messages on your unit must be fully understood and carefully followed. Safety decals on the machine are explained below.

ALWAYS replace missing or damaged safety decals. Replacement decal information is in the parts manual for your unit. Decals can be ordered from your dealer. See Figure 2 for safety decal locations.

Safety Decal Locations

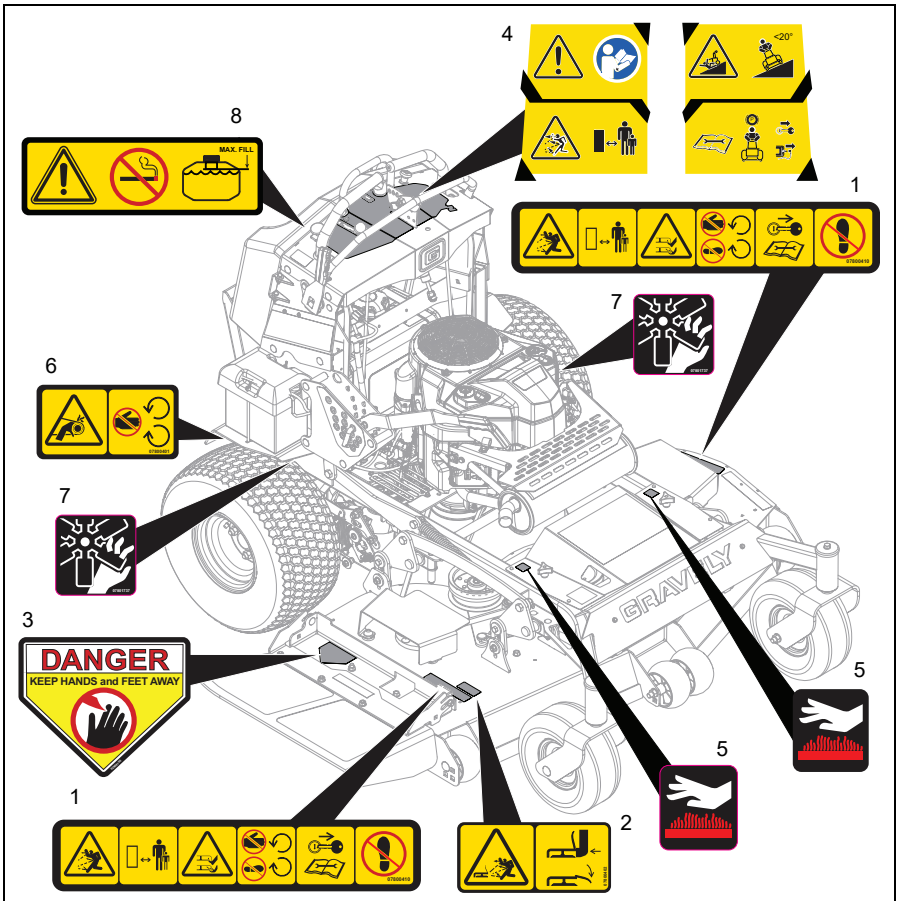

Figure 2

Safety Decal Descriptions

1. DANGER!



Discharge Hazard – NEVER direct discharge toward people, pets or property. Thrown objects can cause injury or damage.



Keep children and others away from unit while unit is in operation.



Dismemberment Hazard – NEVER stick hands or feet under deck or shielded areas.



Keep feet and hands away from all rotating or moving parts.



Shut off engine, remove key, and read manual before servicing or making adjustments to unit.



DO NOT step or stand in this area.

2. DANGER!



Discharge Hazard – NEVER operate unit without discharge chute in operating position. Thrown objects can cause injury or damage.

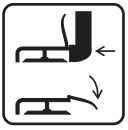

Do not operate mower unless all guards are in operating position or bagger is attached.

3. DANGER!



ALWAYS keep hands and feet away from discharge chute.

4. CAUTION!



DO NOT touch parts which are hot from operation. ALWAYS allow parts to cool.



Read Owner/Operator Manual. Allow operation only by properly trained adult, never children.



Discharge Hazard – NEVER direct discharge toward people, pets or property. Thrown objects can cause injury or damage.



Keep children and others away from unit while unit is in operation.



Operating on slopes may cause the unit to tip unexpectedly. Do not tip mower while operating the unit. Mow across slopes, not up and down.



Look down and behind before and while backing.

DO NOT operate on slopes over 20°. This maximum degree of operation is without attachments.

DO NOT operate on slopes over 10° when operating with attachments.





Read manual, set parking brake, remove key and remove spark plug before you adjust or repair unit.

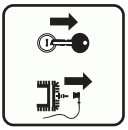

5. HOT PARTS!



DO NOT touch parts which are hot from operation. ALWAYS allow parts to cool.

6. DANGER!



To avoid amputation hazard DO NOT put hands near moving belts.



Keep hands away from all rotating or moving parts.

7. ROTATING PARTS!



AVOID INJURY. Stay clear of rotating parts.

8. DANGER!



DANGER!



No smoking.

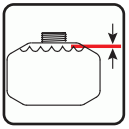

IMPORTANT: DO NOT overfill. Fill fuel tank to below bottom of filler neck.

WARNING: Overfilling may cause severe damage to evaporative system!

- Never fill fuel tank when engine is running, hot or unit is indoors. Never overfill fuel tank.
- Replace fuel cap securely and clean up spilled fuel.

SAFETY RULES

The following safety instructions are based on the B71.4 specifications of the American National Standards Institute and ISO 5395 in effect at the time of production.

Training

Read, understand, and follow all instructions on the machine and in the manuals before starting.

Become familiar with the safe operation of the equipment, operator controls, and safety signs.

Be sure the area is clear of bystanders and pets before operating. Stop machine if anyone enters the area.

Improper use of power equipment can cause serious permanent injury or death to the operator or a bystander.

Understand:

- How to operate all controls
- The functions of all controls
- How to STOP in an Emergency
- Braking and steering characteristics
- Turning radius and clearances

Read the Operator's Manual and other training material. If the operator(s) or mechanic(s) cannot read English, it is the owner's responsibility to explain this material to them.

All operators and mechanics should be trained. The owner is responsible for training the users.

Never let children or untrained people operate or service the equipment. Local regulations may restrict the age of the operator.

The owner/user can prevent and is responsible for accidents or injuries occurring to themselves, other people or property.

Operator Age

Do not allow children under the age of 18 to operate or service any outdoor power equipment.

Local regulations may restrict the age of the operator.

Data indicates operators age 60 years and above are involved in a large percentage of riding mower-related injuries.

These operators should evaluate their ability to operate the riding mower safely enough to protect themselves and others

from serious injury.

Children

Tragic accidents can occur if the operator is not alert to the presence of children. Children are often attracted to the machine and the mowing activity. Never assume that children will remain where you last saw them.

Be alert and turn machine off if a child enters the area.

Before and while backing, look behind and down for small children.

Never carry children, even with the blade(s) shut off. They may fall off and be seriously injured or interfere with safe machine operation. Children who have been given rides in the past may suddenly appear in the mowing area for another ride and be run over or backed over by the machine.

Never allow children to operate or service the machine.

Use extreme care when approaching blind corners, shrubs, trees, or other objects that may block your view of a child.

Keep children out of the mowing area and in the watchful care of a responsible adult other than the operator.

Personal Protection

Always wear appropriate clothing including hard hat, protective gloves, safety glasses and hearing protection. Long hair, loose clothing or jewelry may get tangled in moving parts.

DO NOT wear loose clothing or jewelry and tie back hair during operation.

Wear proper footwear to improve footing on slippery surfaces. NEVER wear open sandals or canvas shoes during operation.

Before Operating

Evaluate the terrain to determine what accessories and attachments are needed to properly and safely perform the job. Only use accessories and attachments approved by the manufacturer.

Inspect the area where the equipment is to be used and remove all objects such as rocks, toys and wire which can be thrown by the machine.
Keep all nuts and bolts tight to be sure the equipment is in safe working condition.
Maintain the machine to be in compliance with the maintenance schedule.
Clean grass and debris from unit, especially from around muffler and engine, to help prevent fires.
Check parking brake operation frequently. Adjust and service as required.
Inspect unit before each use for missing or damaged decals and shields, correctly operating safety interlock system, and deterioration of grass catchers. Replace or repair as needed.
Check that operator's presence controls, safety switches and shields are attached and functioning properly. Do not operate unless they are functioning properly.
Ensure Safety Interlock System is functioning properly. DO NOT operate unit if safety interlock is damaged or disabled.
Be sure all drives are in neutral and parking brake is engaged before starting engine. Steering control levers must be in neutral and PTO disengaged. Only start engine from the operator's position. Use seat belts if provided.
Operate unit only when standing in operator zone.
Be sure the area is clear of bystanders and pets before operating.
Never tamper with safety devices. Check their proper operation regularly.
Keep machine free of grass, leaves, or other debris build-up. Clean up oil or fuel spillage and remove any fuel-soaked debris.

Operation
Never operate machine in a closed or poorly ventilated area. Never run an engine in an enclosed area.
ALWAYS maintain unit in safe operating condition. Damaged or worn out muffler can cause fire or explosion.
This product is equipped with an internal combustion type engine. DO NOT use unit on or near any unimproved, forest-covered or brush covered land unless exhaust system is equipped with a spark arrester meeting applicable local, state or federal laws. A spark arrester, if it is used, must be maintained in effective working order by operator.
DO NOT operate machine while feeling tired, ill or under the influence of alcohol or other drugs.
Do not change the engine governor setting or overspeed the engine.
Do not operate the mower under the influence of alcohol or drugs.
Keep hands and feet away from the cutting units. Do not put hands or feet near rotating parts or under the machine. Keep clear of the discharge opening at all times.
DO NOT touch parts which are hot. Allow parts to cool.
Never operate with the discharge deflector raised, removed or altered, unless using a grass catcher. Make sure other safety devices are in place and working.
Always keep hands and feet away from all pinch points.
Avoid slippery surfaces. Be sure of your footing while using pedestrian controlled equipment, especially when backing up. Walk, don't run. Use extreme caution if operating on wet grass, reduced footing could cause slipping.
Never carry passengers and keep pets and bystanders away. Stop machine if anyone enters the area.
Be aware of the mower discharge direction and do not point it at anyone. Never direct discharged material toward anyone. Avoid discharging material against a wall or obstruction. Material may ricochet back toward the operator. Stop the blade(s) when crossing gravel surfaces.
Never engage PTO when attachment, including mower blades, is not in use. Always turn off power to attachment when not in active use such as traveling or crossing driveways.
Slow down and use caution when making turns and crossing roads and sidewalks. Stop blades if not mowing.

Stop on level ground, lower implements, disengage drives, engage parking brake (if provided), disengage PTO, shut off engine and allow moving parts to stop before leaving the operator's position for any reason including emptying the catchers or unclogging the chute.
Never engage PTO while raising the attachment, including mower blades, or when attachment is in the raised position.
Never raise deck with the blades running.
Never operate with the PTO shield, or other guards not securely in place. Be sure all interlocks are attached, adjusted properly, and functioning properly. Never modify or remove safety devices.
Do not mow in reverse unless absolutely necessary. Always look behind and down before backing up to be sure of a clear path.
Stop equipment and inspect blades after striking objects or if an abnormal vibration occurs. Make necessary repairs before resuming operations.
Never leave a running machine unattended. Always turn off blade(s), set parking brake, stop engine and remove key before dismounting.
Disengage blade(s) when not mowing. Shut off engine and wait for all parts to come to a complete stop before cleaning the machine, removing the grass catcher, or unclogging the discharge guard.
Know the weight of loads. Limit loads to those you can safely control and the unit can safely handle.
Use care when loading or unloading the machine into a trailer or truck.

Operating Conditions
Lightning can cause severe injury or death. If lightning is seen or thunder is heard in the area, do not operate the machine; seek shelter.
Always check overhead and side clearances carefully before operation.
Watch for traffic when operating near or crossing roadways.
Ensure the area is cleared of objects such as rocks, wire, toys, etc., which could be thrown by the blades prior to operation.
Check for weak spots on docks, ramps or floors. Avoid uneven work areas and rough terrain. Stay alert for hidden hazards or traffic.
Always use ramps to climb curbs to prevent personal injury or equipment damage.
Use care when approaching blind corners, shrubs, trees or other objects that may obscure vision.
Dust, smoke, fog, etc. can reduce vision and cause an accident.
Only operate in good light, keeping away from holes and hidden hazards.

Slope Operation
Slopes are a major factor related to loss of control and tip-over accidents, which can result in severe injury or death. Operation on all slopes requires extra caution. If you cannot back up the slope or if you feel uneasy on it, do not mow it.
DO NOT operate on slopes of more than 20°. This maximum degree of operation is without attachments.
Do not operate on slopes of more than 10° with attachments such as grass catchers installed.
Mow across slopes, not up and down.
DO NOT operate the mower on slopes at all when the grass is wet.
DO NOT operate on slopes steeper than you can feel secure about the traction of the tires and the stability of the mower.
Watch for holes, ruts, bumps, rocks, or other hidden objects. Uneven terrain could overturn the machine. Tall grass can hide obstacles.
Do not mow on moist or wet grass. Tires may lose traction causing a loss of control.
Use extra care while operating machine with grass catchers or other attachments; they can affect the stability of the machine. Do not use on steep slopes.
Slow down and use caution when making turns and when changing directions on slopes. Keep all movements on the slope *slow* and *gradual*. Sudden changes in speed or direction could cause the machine to roll over.
Avoid starting, stopping, or turning on a slope. If the tires lose traction, disengage the blade(s) and proceed slowly straight down the slope.

Operation on slopes may lead to loss of steering control. When operating on slopes be prepared to react to an emergency situation: • Return steering levers to neutral position. • Immediately set parking brake. • Turn off PTO and engine.
DO NOT try to stabilize the machine by putting your foot on the ground.
DO NOT park on slopes unless necessary. When parking on slope always chock or block wheels. Always set parking brake.
Choose a low ground speed so you will not have to stop or shift while on a slope.
Slow down and use extra care on hillsides. Be sure to travel in the recommended direction on hillsides. Turf conditions can affect the machine's stability. Use caution while operating near drop-offs.
DO NOT operate near drop-offs, ditches, or embankments. Unit can suddenly turn over if a wheel is over the edge of a cliff or ditch, or if an edge caves in.
Do not bypass transmission or allow transmission to free-wheel when on a slope.

Fuel
To avoid personal injury or property damage, use extreme care in handling gasoline. Gasoline is extremely flammable and the vapors are explosive.
Ethanol blends must not exceed E10. Higher ethanol content may cause your machine to run hotter and damage your engine.
Replace fuel cap securely and clean up spilled fuel before starting engine.
Extinguish all cigarettes, cigars, pipes, and other sources of ignition.
Use only an approved fuel container.
Never store the machine or fuel container where there is an open flame, spark, or pilot light such as on a water or space heater or other appliances.
Never fill containers inside a vehicle or on a truck or trailer bed with a plastic liner. Always place containers on the ground away from your vehicle before filling.
Never refuel the machine indoors.
Never remove fuel cap or add fuel with the engine running. Allow engine to cool before refueling.

Fuel is highly flammable and its vapors are explosive. Handle with care. Use only an approved gasoline container with an appropriately sized dispensing spout. NO smoking, NO sparks, NO flames.
Remove equipment from the truck or trailer and refuel it on the ground. If this is not possible, then refuel such equipment with a portable container, rather than from a gasoline dispenser nozzle.
Keep the nozzle in contact with the rim of the fuel tank or container opening at all times until the fueling is complete. Do not use a nozzle lock open device.
Never overfill fuel tank. Replace fuel cap and tighten securely.
If fuel is spilled on clothing, change clothing immediately.
DO NOT OVERFILL! This equipment and/or its engine may include evaporative emissions control system components, required to meet EPA and/or CARB regulations, that will only function properly when the fuel tank has been filled to the recommended level. Overfilling may cause permanent damage to evaporative emissions control system components. Filling to the recommended level ensures a vapor gap required to allow for fuel expansion. Pay close attention while filling the fuel tank to ensure that the recommended fuel level inside the tank is not exceeded. Use a portable gasoline container with an appropriately sized dispensing spout when filling the tank. Do not use a funnel or other device that obstructs the view of the tank filling process.

Towing
Do not attach towed equipment or accessories.This vehicle is not designed to tow.

Accessories
Follow the manufacturer's recommendation for wheel weights or counterweights
Attachments reduce the maximum operating slope angle. DO NOT operate on slopes over 10° when operating with attachments.
Check grass catcher components and the discharge guard frequently and replace with the manufacturer's recommended parts, when necessary.

Use only attachments recommended by AriensCo that are appropriate to your use and can be used safely in your application.

Batteries

Avoid Electric Shock. Objects contacting both battery terminals at the same time may result in injury and unit damage. DO NOT reverse battery connections.

Reverse connections may result in sparks which can cause serious injury. Always connect positive (+) lead of charger to positive (+) terminal, and negative (-) lead to negative (-) terminal.

ALWAYS disconnect negative (-) cable FIRST and positive (+) cable SECOND. ALWAYS connect positive (+) cable FIRST, and negative (-) cable SECOND.

Explosive Gases from battery can cause death or serious injury. Poisonous battery fluid contains sulfuric acid and its contact with skin, eyes or clothing can cause severe chemical burns.

No flames, No sparks, No smoking near battery.

Charge batteries in an open well ventilated area, away from spark and flames. Unplug charger before connecting or disconnecting from battery. Always wear protective clothing and safety glasses near battery and use insulated tools.

ALWAYS keep batteries out of reach of children.

Battery posts, terminals and related accessories contain lead and lead compounds, chemicals known to the State of California to cause cancer and reproductive harm. Wash hands after handling.

Service

The use of non-genuine replacement parts or accessories could adversely affect machine operation and safety.

Do not change engine governor setting or overspeed the engine

Park machine on level ground. Never allow untrained personnel to service machine.

Disconnect battery or remove spark plug wire before making any repairs. Disconnect the negative terminal first and the positive last. Reconnect positive first and negative last.

Keep all parts in good working condition and all hardware tightened. Replace all worn or damaged decals.

Keep unit free of debris. Clean up oil or fuel spillage.

ALWAYS block wheels and know all jack stands are strong and secure and will hold weight of unit during maintenance. Use jack stands to support components when required.

Carefully and slowly release any pneumatic or hydraulic pressure from components with stored energy.

ALWAYS keep body and hands away from pin holes or nozzles which eject hydraulic fluid under pressure.

NEVER attempt to make any adjustments or repairs to unit while engine is running (except where specifically recommended). Disengage drives, lower implement, set parking brake, stop engine and remove key or disconnect spark plug wire. Wait for all movement to stop before adjusting, cleaning or repairing.

Keep hands and feet away from moving parts. If possible, do not make adjustments with the engine running.

Lower cutting deck unless a positive mechanical lock is used.

Allow engine to cool before servicing.

Moving parts can cut or amputate fingers or a hand. On multiblade mowers, rotation of one blade will cause all blades to rotate.

Use care when checking blades. Wrap the blade(s) or wear gloves, use caution when servicing them. Replace damaged blades. Never straighten or weld them.

Transporting Unit

Use care when loading or unloading the machine into a trailer or truck.

Use full width ramps for loading machine into trailer or truck.

Secure unit chassis to transport vehicle. Never secure from rods or linkages that could be damaged. Tie the machine down securely using straps, chains, cable, or ropes. Both front and rear straps should be directed down and outward from the machine.

Do not transport machine while engine is running.

ALWAYS turn off power to attachment and shut off fuel when transporting unit.

Storage
NEVER store unit with fuel in fuel tank, inside a building where any ignition sources are present.
Clean grass and debris from cutting units, drives, mufflers, and engine to help prevent fires. Clean up oil or fuel spillage. Let engine cool before storing and do not store near flame.
Shut off fuel while storing or transporting. Do not store fuel near flames or drain indoors.
For extended storage, shut off fuel and clean unit thoroughly. See engine manual for proper storage.

SETUP

WARNING: AVOID INJURY. Read and understand entire *Safety* section before proceeding.

1. Remove pins and fold crate ends outward.
2. Remove and discard packaging.
3. Unlock and lower operator platform into operating position. See *Set Operator Platform* on page 18.
4. Remove wing nuts retaining battery cover.
5. Remove battery cover.
6. Remove hardware from negative (black) battery cable. DO NOT discard hardware.
7. Secure negative battery cable to negative (open) battery terminal with hardware removed in previous step.
8. Reinstall battery cover and secure with original hardware.
9. Check engine oil level and add oil if needed. Refer to engine manual.
10. Check hydraulic oil level and add oil if needed. See *Check Hydraulic Oil Level* on page 22.
11. Check tire pressures. See *Check Tire Pressure* on page 24 and *Specifications* on page 38.
12. Ensure transaxle bypass levers are in the operating position. See *Move Unit Manually* on page 20.
13. Check fuel level and add fuel if needed.
14. Start the engine. See *Start The Engine* on page 19.
15. With left steering control (OPC) depressed, release parking brake. See Figure 10.
16. Set throttle to slow speed and slowly move steering levers forward to drive unit off crate. See *Operate Unit* on page 19.
17. Stop engine after unit is off crate. See *Stop The Engine* on page 20.
18. Place discharge chute in the operating position. See Figure 3.

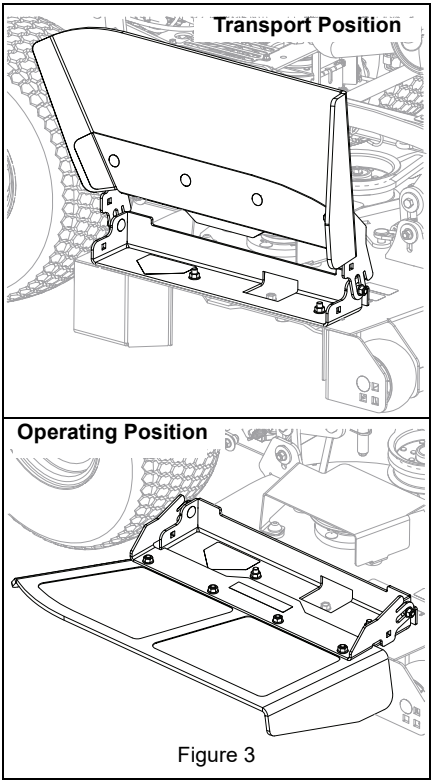

Figure 3

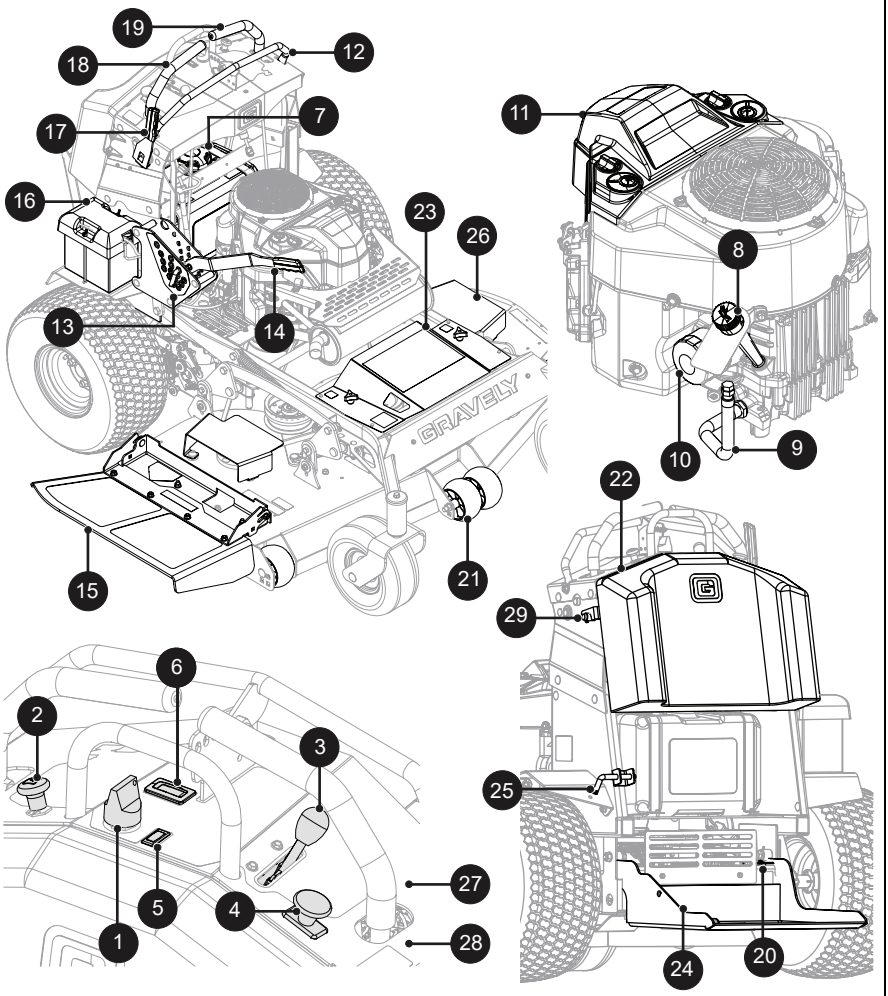
19
18
12
17
7
16
23
26
13
14
15
21
11
8
10
9
22
29
25
24
20
6
2
3
5
4
1
27
28
GRAVELY

Figure 4

1. Ignition Switch
2. Choke Control Knob
3. Throttle Control Lever
4. Power Take Off (PTO) Switch
5. Oil Pressure Warning Light
6. Hour Meter
7. Fuel Tank and Cap
8. Oil Fill / Dipstick
9. Oil Drain
10. Engine Oil Filter
11. Air Filter
12. Speed Limiting Bar
13. Height-of-Cut (HOC) System
14. Deck Lift Lever
15. Discharge Chute
16. Battery
17. Parking Brake Lever
18. Steering Lever (2)
19. Operator Presence Control (OPC) Lever
20. Transaxle Bypass Lever (2) (Behind Operator Platform)
21. Anti-Scalp Wheels
22. Pad/Rear Access Panel
23. Belt Access Panel
24. Operator Platform
25. Platform Lock Pin
26. Belt Cover (2)
27. Fuse Box (Below Control Panel)
28. Relay (Below Control Panel)
29. Hinged Pad Latch

WARNING: AVOID INJURY. Read and understand entire *Safety* section before proceeding.

See Figure 4 for Controls and Features locations.

IGNITION SWITCH

See Figure 5.

Controls power to the engine. The key cannot be removed when in the on position.

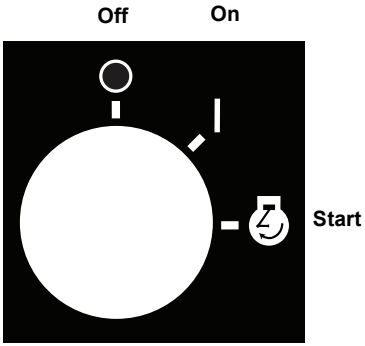

Figure 5

CHOKE CONTROL KNOB

See Figure 6.

Controls air intake to the engine.

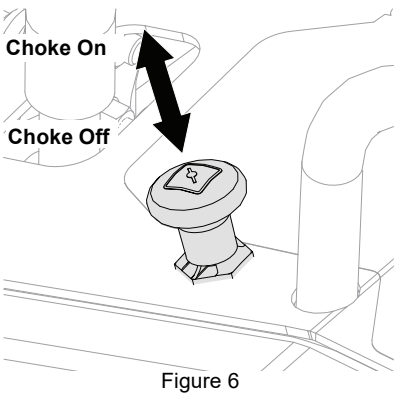

Figure 6

THROTTLE CONTROL LEVER

See Figure 7.

Controls engine speed.

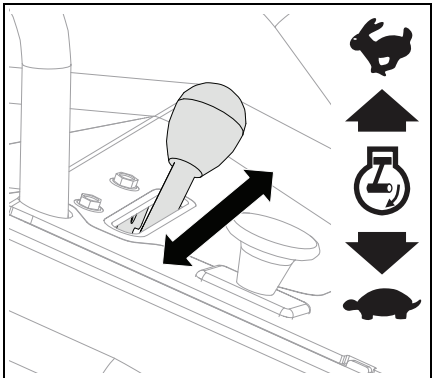

Figure 7

POWER TAKE-OFF (PTO) SWITCH

See Figure 8.

Controls power to the mower blades. The engine will not start with the PTO switch in the on position.

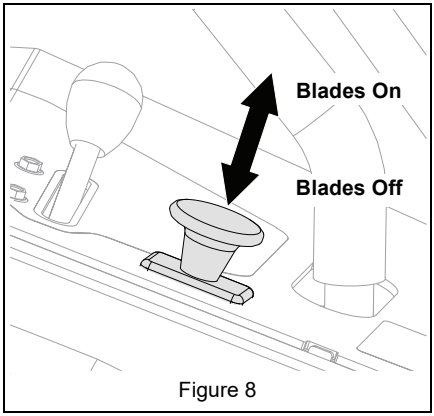

Figure 8

OIL PRESSURE WARNING LIGHT

See Figure 9.

Illuminates when oil pressure is low. Stop engine immediately and refer to engine manual.



Figure 9

SPEED LIMITING BAR

Controls the speed of forward travel.

DECK LIFT LEVER

Deck lift lever or pedal raises and lowers mower deck for mowing or transport.

TRANSAXLE BYPASS LEVERS

Engage and disengage transaxles so unit can be moved with the engine off.

ANTI-SCALP WHEELS

Help prevent the deck from contacting the ground and scalping the lawn when mowing over high spots.

HOUR METER

Measures and displays engine runtime.

PARKING BRAKE LEVER

See Figure 10.

Engages the parking brake. The engine will not start when brake is released.

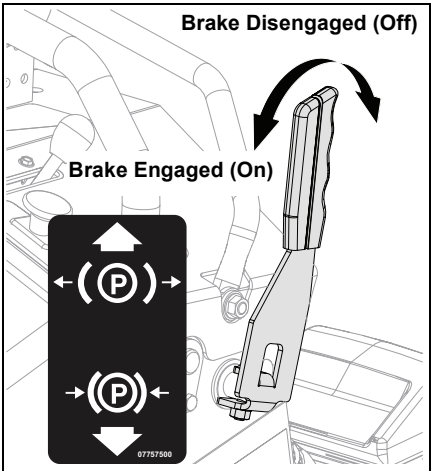

Figure 10

STEERING LEVERS

Control the direction and speed of unit. The levers gradually return to neutral when released and are locked in neutral when parking brake is engaged.

SAFETY INTERLOCK SYSTEM

Monitors the interaction of various unit features for operator safety.

BEFORE OPERATION

WARNING: AVOID INJURY. Read and understand the *Safety* section before proceeding.

1. Know how to stop in an emergency. See *Emergency Stopping* on page 19.
2. Check fuel level and add fuel if needed.

IMPORTANT: Use fresh unleaded fuel with an octane rating of at least 87. DO NOT use E85 blended fuels; the engine is not E20 / E30 / E85 compatible. The maximum recommended ethanol content is 10%. Gravely recommends using a quality fuel stabilizer in all fuel. See *Short-Term Storage* on page 37.

3. Check engine oil level and add oil if needed. Refer to engine manual.
4. Check hydraulic oil level. See *Check Hydraulic Oil Level* on page 22.
5. Check condition of air cleaner. Refer to engine manual.
6. Check function of all controls.
7. Check function of the Safety Interlock System by performing the tests below. Contact your Gravely dealer for repair if any of the tests fail.

WARNING: AVOID INJURY. Failure of Safety Interlock System together with improper operation can result in severe personal injury.

Test	Steering Levers	PTO	Parking Brake	Result
Starting Interlock				
1	Neutral	Off	Engaged	Engine starts.
2	Forward, Neutral, Reverse	On	Engaged or Disengaged	Engine does not start.
3	Forward, Neutral, Reverse	On or Off	Disengaged	Engine does not start.
Operating Interlock (Engine On)				
4 *	Forward, Neutral, Reverse	On	Engaged or Disengaged	Engine shuts off.
5 *	Forward, Neutral, Reverse	On or Off	Disengaged	Engine shuts off.
* When operator lifts off operator presence control arm				

SET CUTTING HEIGHT

See Figure 11.

IMPORTANT: *Model 994160*: Minimum cutting height is 5.1 cm (2"). See *Specifications* on page 38.

1. Pull lift lever rearward to release deck pressure from HOC pin.
2. Rotate HOC pin and remove pin.

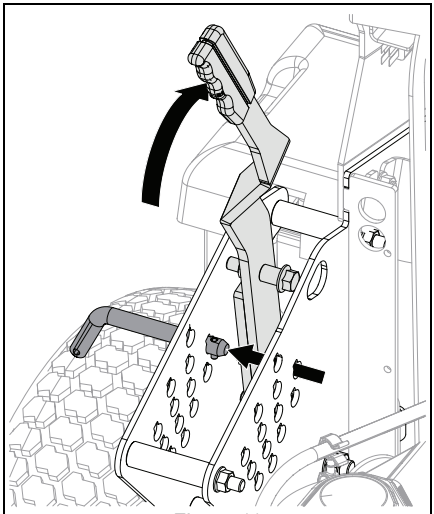

Figure 11

3. Align pin with desired HOC setting and insert pin.
4. Slowly return lift lever to resting position.

TRANSPORT UNIT

See Figure 12.

1. Pull lift lever rearward and move lever to the left to insert bolt through transport lock hole. Ensure washer is positioned against HOC plate.
2. Move unit to transport vehicle.
3. Stop engine, engage parking brake and remove key.
4. Secure mower frame to transport vehicle.

NOTICE: NEVER secure unit to vehicle from rods or linkages that could be damaged.

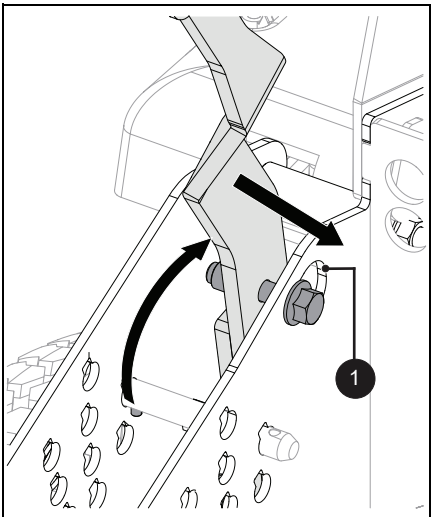

1. Transport Lock Hole

Figure 12

RELEASE TRANSPORT LOCK

1. Pull lift lever rearward and move lever to the right to release transport lock.
2. Slowly return lift lever to resting position.

SET OPERATOR PLATFORM

CAUTION: Platform will drop when lock pin is released. Stand clear when releasing platform.

See Figure 13.

To rotate platform up:

1. Rotate platform up to the storage position.
2. Align pin with notch in platform and insert pin.
3. Rotate pin to lock platform in place.

To rotate platform down:

4. Rotate platform lock pin and release pin.
5. Rotate platform down to the standing position.

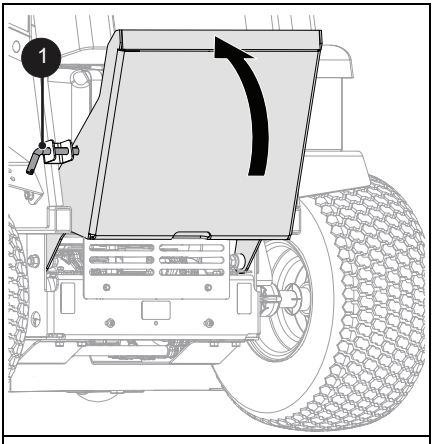

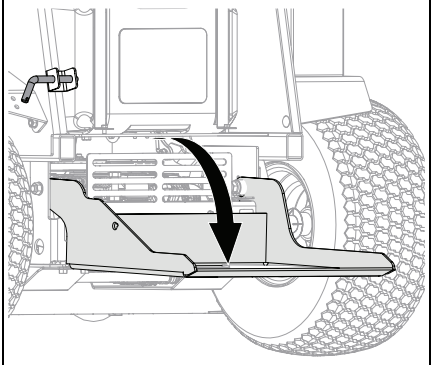

1. Platform Lock Pin

Figure 13

OPERATION

WARNING: AVOID INJURY. Read and understand the *Safety* section before proceeding.

IMPORTANT: All references to left, right, front or rear are given from the perspective of operator in operator's position, facing the direction of forward travel.

EMERGENCY STOPPING

WARNING: AVOID INJURY. Operating on slopes may lead to loss of steering control. Be prepared to react.

1. Return steering levers to neutral position.
2. Engage parking brake.
3. Push PTO switch down to off position.
4. Turn key to off position and remove from ignition.

START THE ENGINE

1. Move steering levers to neutral position.
2. Engage parking brake.
3. Push PTO switch down to off position.
4. If engine is cold, move choke control lever to the on position. DO NOT use choke on a warm engine.
5. Move throttle control lever to 3/4 fast position.
6. Insert ignition key and turn to the start position. Release key when engine starts.

NOTICE: Do not operate the starter for more than 10 seconds per starting attempt. If the engine does not start, allow a 60-second cool down period between starting attempts.

7. Gradually move choke control lever to the off position after engine starts.

NOTICE: Do not operate the starter for more than 10 seconds per starting attempt. If the engine does not start, allow a 60-second cool down period between starting attempts.

OPERATE UNIT

1. Start the engine. See *Start The Engine* on page 19.
2. With left steering control (OPC) depressed, release parking brake.
3. Move steering levers to neutral and set throttle control lever to fast position.

IMPORTANT: Engaging the PTO knob with the throttle lever set lower than fast position can cause excessive belt wear. ALWAYS use fast position when engaging the PTO.

4. With left steering control (OPC) depressed, pull PTO switch up to the on position.

IMPORTANT: Never engage the PTO if the mower is plugged with grass or debris. This may cause damage to the electric clutch.

WARNING: AVOID INJURY. Move the steering levers slowly and keep the throttle at slow speed until you learn how to operate the unit.

5. Move steering levers to begin mowing.

Direction of Travel	Lever Position
Forward	Push both levers forward from neutral position.
	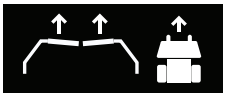
Reverse	Pull both levers backward from neutral position.
	
Right Turn	Push left lever farther forward than the right lever.
	
Left Turn	Push right lever farther forward than the left lever.
	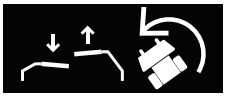

Direction of Travel	Lever Position
Stop	Return both levers to neutral position.
	

IMPORTANT: Aggressive turning can scuff or damage lawns. Always keep both wheels rotating when making sharp turns. DO NOT make turns with inside wheel completely stopped. For minimum turning radius, slowly reverse inside wheel while moving outside wheel slowly forward.

For Best Mowing Results

1. Cut grass when it is dry.
2. Keep mower blades sharp.
3. Keep mower deck properly leveled.
4. Adjust anti-scalp wheels to prevent scalping.
5. Do not set height of cut too low. For very tall grass, mow twice.
6. Do not travel too fast.
7. Mow with engine at full throttle.
8. When mulching, only remove 1/3 of grass length per cutting. Do not cut more than 2.5 cm (1") at a time.
9. Discharge clippings into areas already cut.
10. Change cutting pattern with each mowing.
11. Do not allow grass or debris to collect inside mower deck. Clean after each use.

STOP THE ENGINE

WARNING: AVOID INJURY. Wait for all moving parts to stop before leaving operator's position.

1. Move steering levers to the neutral position.
2. Engage parking brake.
3. Reduce throttle to 3/4 fast position.
4. Push PTO switch down to the off position.
5. Move throttle control lever to slow position.
6. Turn key to off position and remove from ignition.

MOVE UNIT MANUALLY

Bypass the transaxles to move the unit with the engine off.

1. Place steering levers in neutral position and engage parking brake.
2. Stop engine, remove key and wait for moving parts to stop and for hot parts to cool.
3. Rotate platform up and engage platform lock.
4. Pull both transaxle bypass levers out into bypass position. See Figure 14.

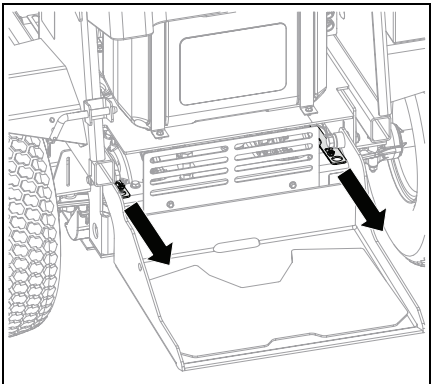

Figure 14

5. Release parking brake and push unit to desired location.
6. Engage parking brake.

7. Push bypass levers into operating position. See Figure 15.

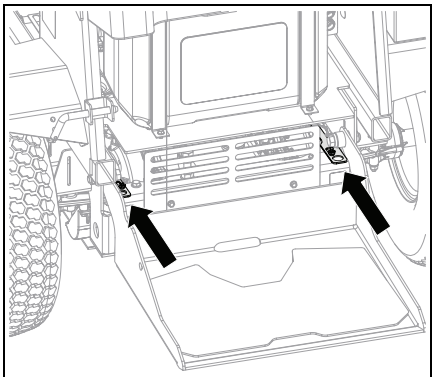

Figure 15

8. To return platform to standing position, release platform lock pin and lower platform.

MAINTENANCE

WARNING: AVOID INJURY. Read and understand entire *Safety* section before proceeding.

Proper maintenance can prolong the life of unit. The *Maintenance Schedule* on page 22 shows the recommended service schedule.

Your Gravely dealer can provide service and adjustments to keep your unit operating at peak efficiency. Contact an authorized engine manufacturer's service center for engine service.

More frequent service may be required due to working conditions (heavy loads, high ambient temperatures, dusty conditions, or airborne debris).

See the maintenance instructions in the Engine Manual for additional information.

SERVICE POSITION

1. Park unit on a flat, level surface.
2. Stop engine, remove key and wait for moving parts to stop and for hot parts to cool.
3. Chock wheels. Strap and clamp unit onto lift, if used.
4. Place steering levers in neutral position and engage parking brake.

5. Remove belt access panel. See Figure 16.

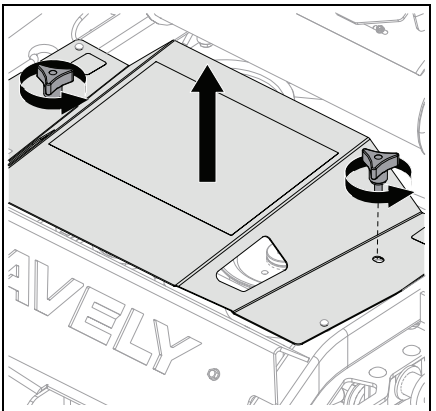

Figure 16

6. Disengage pad latch and rotate swing door outward. See Figure 17.

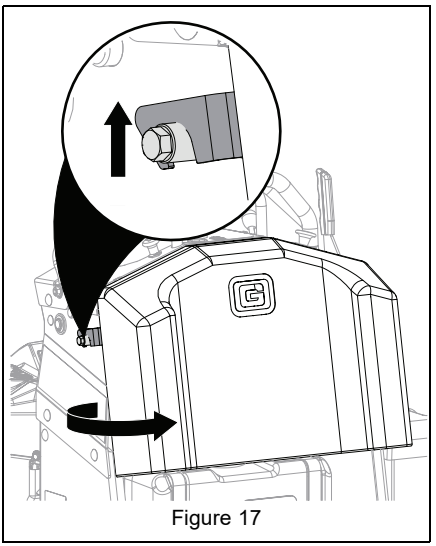

Figure 17

HOUR METER

See Figure 18.

Timer measures engine runtime and cannot be reset.

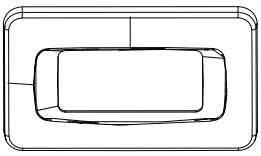

Figure 18

MAINTENANCE SCHEDULE

Service Performed	Each Use	Every 25 hrs.	Every 50 hrs.	Every 100 hrs.	Every 400 hrs.	Every 500 hrs.
Clean Debris from Engine	•					
Inspect Belt Cover Grommets for Damage	•					
Check Engine Oil *	•					
Change Engine Oil *						
Check Air Filter *			•			
Change Air Filter *						
Clean Engine * Cooling System				•		
Check Safety Interlock System	•					
Check Hydraulic System	•					
Check Tire Pressure	•					
Check Mower Blades		•				
Lubricate Unit			•			
Check Parking Brake	•					
Clean Battery				•		
Check Fasteners				•		
Check Belts				•		
Change Hydraulic Oil and Filter **					•	

* Refer to engine manual for instructions.

** Change after first 75 hours of operation.

SERVICE PARTS

See your Gravely dealer to purchase service parts for your unit.

Description	Qty	Part No.
Air Filter Outer Element	1	21537000
Air Filter Inner Element	1	21536900
Engine Oil Filter	1	21535800
Fuel Filter	1	21538400
Hydraulic Oil Filter	2	21545100
PTO Belt (Engine to Deck) – 48"	1	07200729
PTO Belt (Engine to Deck) – 52"	1	07200819
PTO Belt (Engine to Deck) – 32"	1	07200917
Traction Belt (Hydro Pump) – 48" & 52"	1	07200919
Traction Belt (Hydro Pump) – 32"	1	07200918
Mower Blade – 48"	3	00450200
Mower Blade – 52"	3	03253800
Mower Blade – 32"	2	00450200

CHECK SAFETY INTERLOCK SYSTEM

Parking Brake Interlock System

With the parking brake engaged, the steering levers must be locked in neutral.

With the parking brake disengaged, the engine must not start and the engine must shut off if the operator releases the control lever. See *Before Operation* on page 17. If system does not operate correctly, see your dealer for repair. DO NOT operate until repairs are made.

CHECK HYDRAULIC SYSTEM

Check Hydraulic Oil Level

1. Place unit in service position. See *Service Position* on page 21.
2. Remove side port plug and check oil level in transaxle. Oil level MUST reach the bottom edge of the side fill port. See Figure 20.

IMPORTANT: Engine should be cold when checking initial oil level.

3. Operate engine for one minute and recheck oil levels.
4. Add hydraulic oil, if needed. See *Add Hydraulic Oil* on page 23.

Add Hydraulic Oil

1. Place unit in service position. See *Service Position* on page 21.
2. Lift and properly support rear of unit and remove wheel.
3. Remove and retain skid plate hardware and skid plate. See Figure 19.

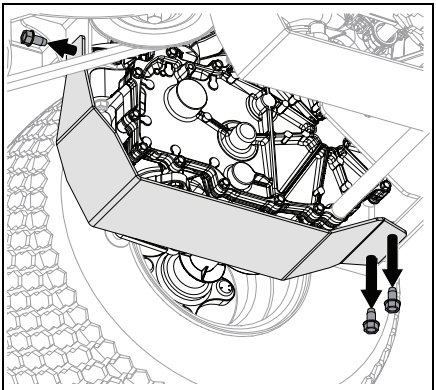

Figure 19

See Figure 20.

4. Remove fill port plugs from transaxle.
5. Add 15W-50 Full-Synthetic Hydraulic Fluid (Gravely p/n 00057100) or equivalent until oil reaches the bottom edge of the side fill port. (approximately 1.9 L (2 qt) per transaxle).
6. Reinstall fill port plugs. Torque to 20.3 N•m (120 in-lbs)
7. Repeat steps 4 – 12 for the other transaxle.

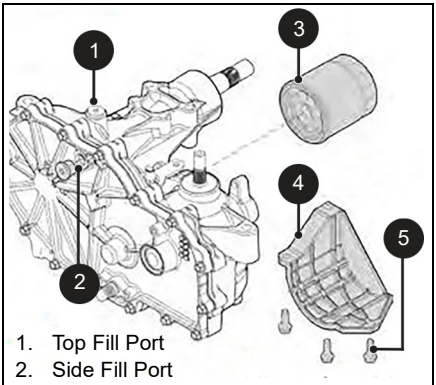

1. Top Fill Port
2. Side Fill Port
3. Oil Filter
4. Filter Guard
5. Mounting Hardware

Figure 20

Change Hydraulic Oil and Filter

1. Operate unit for a few minutes to warm hydraulic oil.
2. Stop engine, remove key and wait for all moving parts to stop and for hot parts to cool.
3. Lift and properly support rear of unit and remove wheel.
4. Position container under oil filter to catch used oil.

See Figure 20.

5. Remove filter guard and oil filter from transaxle. Allow the transaxle to drain completely.
6. Wipe filter-mounting surface clean.
7. Lubricate rubber gasket on new oil filter with clean hydraulic oil.
8. Spin filter onto filter housing until it makes contact, and then turn filter 3/4 turn to tighten.
9. Reinstall filter guard. Torque hardware to 13.0 N•m (115 in-lbs). DO NOT overtighten.
10. Add hydraulic oil. See *Add Hydraulic Oil* on page 23.
11. Purge hydraulic system. See *Purge Hydraulic System* on page 23.

Purge Hydraulic System

Purge air from hydraulic system after draining oil or changing the filter.

WARNING: AVOID INJURY. This adjustment requires operating the engine. Use extreme care to avoid contact with moving parts and hot surfaces. Be sure rear of unit is well supported and secure before starting engine.

1. Park unit facing a wall or chock wheels.
2. Release parking brake.
3. Support unit so drive wheels are off the ground.
4. Bypass transaxles. See *Move Unit Manually* on page 20.
5. Start the engine and slowly move steering levers forward and backward five or six times.
6. Stop engine.
7. Return transaxle bypass levers to operating position. See *Move Unit Manually* on page 20.
8. Start engine.

9. Slowly move steering levers forward and backward five or six times.
10. Stop engine, lower unit to ground and check oil level. Add oil if needed.
11. Repeat steps 1 – 10 until transaxles operate smoothly in forward and reverse at normal speeds without excessive noise.

CHECK TIRE PRESSURE

See *Specifications* on page 38 for recommended tire pressure.

WARNING: AVOID INJURY. Explosive separation of tire and rim parts is possible.

- DO NOT inflate tires above the recommended pressure.
- DO NOT inflate tires with a compressor; use a hand pump.
- DO NOT stand in front of tire assembly when inflating. Use a clip-on chuck and extension hose long enough to allow you to stand to one side.
- DO NOT mount a tire without proper equipment and experience.

CHECK MOWER BLADES

Check blades for wear. Replace or sharpen as needed.

CAUTION: AVOID INJURY. Use sturdy gloves or padding to protect hands when working with mower blades.

Rotation of one blade rotates the other blades.

Remove Blades

1. Place unit in service position. See *Service Position* on page 21.
2. Disconnect spark plug wires.

See Figure 21.

3. Remove and retain hardware securing mower blades and remove blades.

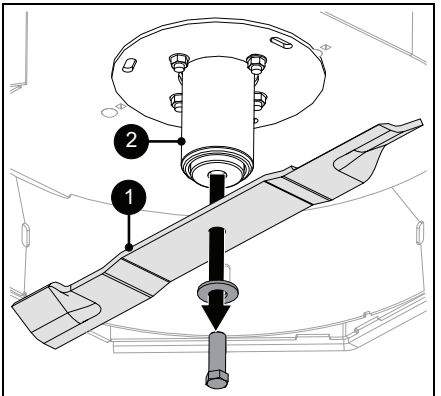

1. Mower Blade
2. Spindle

Figure 21

Sharpen Blades

CAUTION: DO NOT sharpen blades while attached to unit.

1. Remove blades. Discard blades if:
   - More than 1.3 cm (1/2") of metal is removed.
   - Air lifts are eroded.
   - Blades are bent or broken.
2. File or grind an equal amount of metal from each cutting edge of the blade until sharp. DO NOT change angle of cutting edge or round the corner of the blade. See Figure 22.

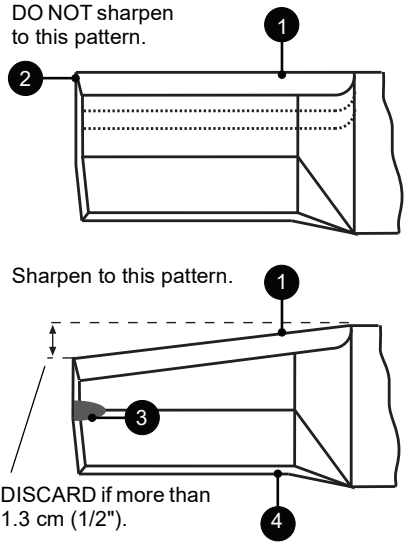

1. Cutting Edge
2. Square Corner
3. Air Lift Erosion
4. Air Lift

Figure 22

CAUTION: Unbalanced blades cause excessive vibration and eventual damage to unit. Balance blades before reinstalling on unit. NEVER weld or straighten blades.

3. Check blade balance by sliding an unthreaded bolt through center hole. Hold the bolt level. If blade does not remain horizontal, sharpen the heavy end until blade is balanced.

Install Blades

See Figure 21.

1. Secure blades to spindles with washers and hex bolts removed earlier. Torque to 156 – 217 N•m (115 – 160 lb-ft).
2. Reconnect spark plug wires.

CHECK PARKING BRAKE

IMPORTANT: Parking brake lever engages drive wheels with two independent cables. It is possible for parking brake to engage one drive wheel only.

1. Place unit in service position. See *Service Position* on page 21.
2. Bypass transaxles. See *Move Unit Manually* on page 20.
3. Push unit forward.
   - If unit does not move forward, parking brake is functioning correctly.
   - If unit easily moves forward, repair is required. Contact your Gravely dealer.
4. Return transaxle bypass levers to operating position. See *Move Unit Manually* on page 20.

CLEAN BATTERY

WARNING: AVOID INJURY. Battery posts, terminals and related accessories contain lead and lead compounds, chemicals known to the State of California to cause cancer and reproductive harm. Wash hands after handling.

Remove Battery

See Figure 23.

1. Place unit in service position. See *Service Position* on page 21.
2. Remove wing nuts retaining battery cover and remove cover.
3. Remove hardware retaining battery hold-down bracket and remove bracket.
4. Disconnect the negative cable and then the positive cable from battery.
5. Remove battery.

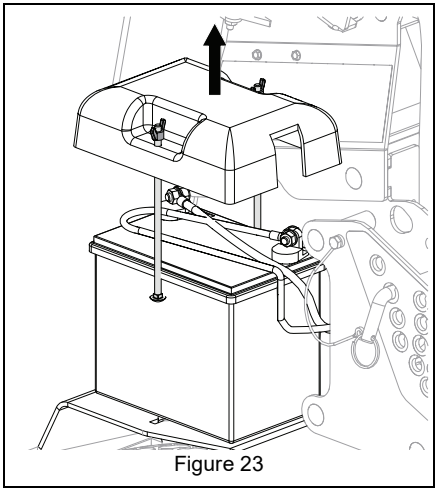

Figure 23

Clean Battery

1. Clean terminals and battery cable ends with wire brush.
2. Coat terminals with dielectric grease or petroleum jelly.

Install Battery

1. Install battery.
2. Reconnect positive cable and then the negative cable.
3. Reposition boot over positive terminal.
4. Secure hold-down bracket to battery using original hardware.
5. Reinstall battery cover and secure with wing nuts.

CHARGE BATTERY

NOTICE: DO NOT fast charge. Charging at a higher rate damages or destroys battery. ONLY use an automatic charger designed for use with your battery.

NOTICE: ALWAYS follow information provided on battery by battery manufacturer. Contact battery manufacturer for details regarding charging.

1. Remove battery from unit. See *Remove Battery* on page 25.
2. Place battery on bench or other well-ventilated place.
3. Connect positive lead of charger to positive terminal.
4. Connect negative lead of charger to negative terminal.
5. Charge battery according to charger and battery manufacturers' instructions.
6. Reinstall battery. See *Install Battery* on page 26.

Jump-Starting

Gravely does not recommend jump-starting your unit. Jump-starting can damage engine and electrical system components. See your engine manual for more detailed information.

CHECK FASTENERS

Check for loose hardware and tighten if necessary.

LUBRICATE UNIT

1. Apply oil to all pivot points and pin connections.

SERVICE AND ADJUSTMENTS

WARNING: AVOID INJURY. Read and understand entire *Safety* section before proceeding.

ADJUST SPEED LIMITING BAR

See Figure 24.

1. Pull the spring pin.
2. Move speed limiting bar rearward to decrease maximum speed or forward to increase maximum speed.
3. Reinstall spring pin into the desired speed setting.

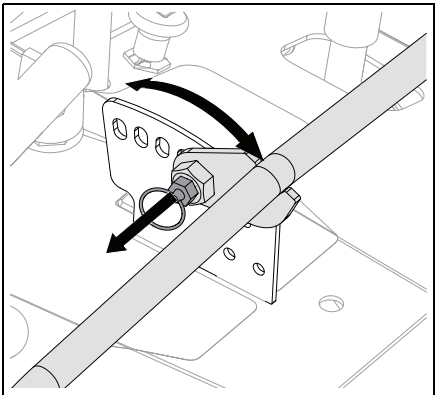

Figure 24

ADJUST TRANSAXLES

Check for Excessive Creep

WARNING: AVOID INJURY. This adjustment requires operating the engine. Use extreme care to avoid contact with moving parts and hot surfaces. Be sure rear of unit is well supported and secure before starting engine.

1. Operate unit for a minimum of five minutes to warm hydraulic system.
2. Stop engine and engage parking brake.
3. Chock front wheels and support unit so both drive wheels are off the ground.
4. Remove drive wheels.
5. Start engine, move throttle lever to fast position and release parking brake.
6. Move steering levers forward and backward five or six times and then return levers to neutral position.
7. Check wheel hubs for rotation.
   - If there is only slight rotation, stop engine, reinstall wheels and lower unit to ground.
   - If there is excessive rotation, adjust neutral position. See *Adjust Neutral Position* on page 27.

Adjust Neutral Position

If wheel hub has excessive rotation after checking for excessive creep, adjust neutral position.

1. Loosen the return-to-neutral screw on the transaxle. See Figure 25.

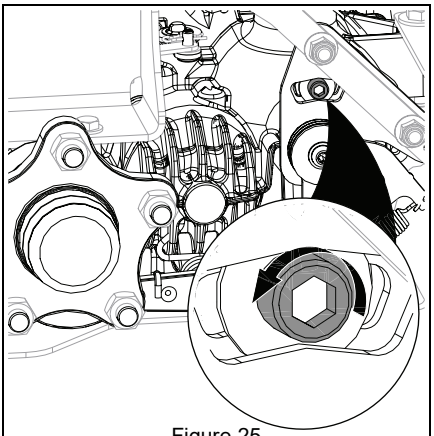

Figure 25

2. Slowly turn transaxle control arm in the opposite direction of hub rotation until hub stops. See Figure 26.

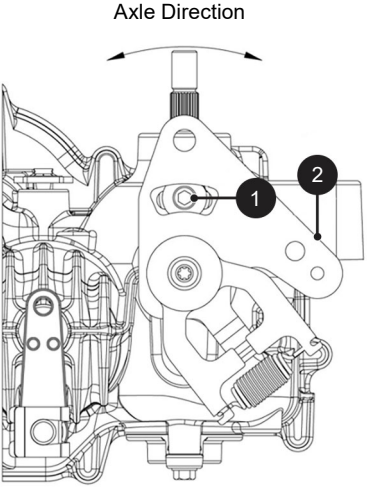

1. Return To Neutral Screw
2. Transaxle Control Arm

Figure 26

3. Hold the transaxle control arm in position and tighten the return-to-neutral screw.
4. Start engine, move throttle lever to fast position and release parking brake.
5. Move steering levers forward and backward five or six times and then return levers to neutral position.
6. Check wheel hubs for rotation:
   - If there is only slight rotation, stop engine, reinstall wheels and return unit to operating position.
   - If there is excessive rotation, repeat steps 1 – 5.

ADJUST STEERING LEVERS

1. Stop engine, remove key and wait for all moving parts to stop and for hot parts to cool.
2. Engage parking brake.

See Figure 27 and 28.

4. Loosen the eccentric spacer nut.
5. Loosen the jam nuts located on the tie rod.
6. Push and hold a steering control lever forward and turn the control rod until the steering lever makes contact with the speed limiting bar.

7. Repeat step 6 on other side.
8. Return the steering levers to the neutral position.
9. If necessary, slightly adjust the control rods so the steering levers are aligned with each other.
10. Turn tie rod until steering levers align. Adjust both left and right sides as needed.
11. Tighten jam nuts and eccentric spacer nut.

NOTICE: Adjust steering lever interlock if the steering levers are shifted during application of the brake. See *Steering Lever Interlock Adjustment* on page 28.

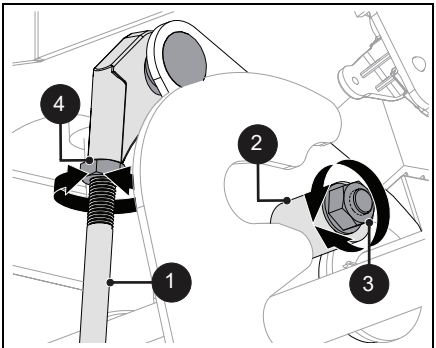

1. Tie Rod
2. Eccentric Spacer
3. Eccentric Spacer Nut
4. Jam Nut

Figure 27

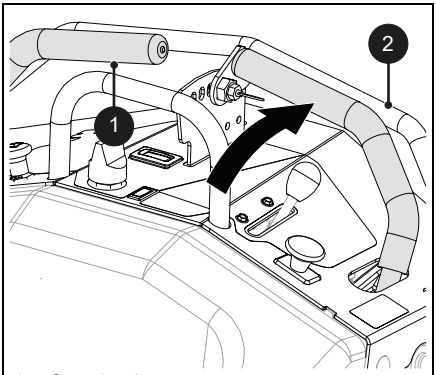

1. Steering Lever
2. Front Index Bar

Figure 28

Steering Lever Interlock Adjustment

See Figure 29.

1. Stop engine, remove key and wait for all moving parts to stop and for hot parts to cool.
2. Chock wheels to prevent unit from rolling.
3. Release parking brake.
4. Loosen but do not remove the outer lock nut on the eccentric brake bushing.
5. Engage the parking brake. Bushing will seat in notch in brake lever bracket.
6. Tighten lock nut.
7. If necessary, adjust steering levers to ensure full alignment with each other.

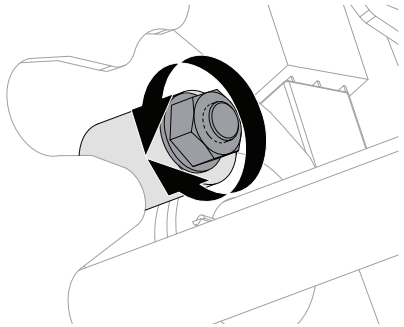

Figure 29

ADJUST UNIT TO DRIVE STRAIGHT

1. Park unit on a flat, level surface.
2. Check tire pressures. If needed, adjust to recommended pressures. See *Specifications* on page 38.

IMPORTANT: DO NOT inflate tires outside recommended range.

3. Drive machine forward, pushing both control levers all the way to speed limiting bar.
4. Check tracking. If unit does not drive in a straight line, adjust steering levers. See *Adjust Steering Levers* on page 27.

REPLACE MOWER BELTS

CAUTION: Damaged or worn belts may result in injury and / or damage to the unit. Check belts for excessive wear or cracks often.

Belt Access

1. Place steering levers in neutral position and engage parking brake.
2. Stop engine, remove key and wait for moving parts to stop and for hot parts to cool.
3. Position mower deck at lowest cutting height.
4. Lift belt covers to remove from mower deck. See Figure 30.

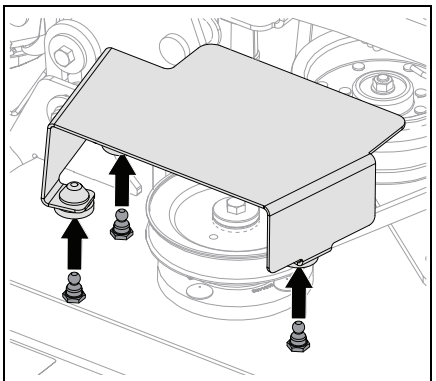

Figure 30

5. Remove the belt access panel. See *Service Position* on page 21.

Remove PTO Belt

CAUTION: Use care when releasing idler spring tension. Keep body parts well away from idlers when performing this operation.

See Figures 31 and 32.

1. Using a spring puller, slowly remove spring from anchor bolt until all tension is removed.
2. Remove PTO belt from deck sheaves.

Models 994158, 994159

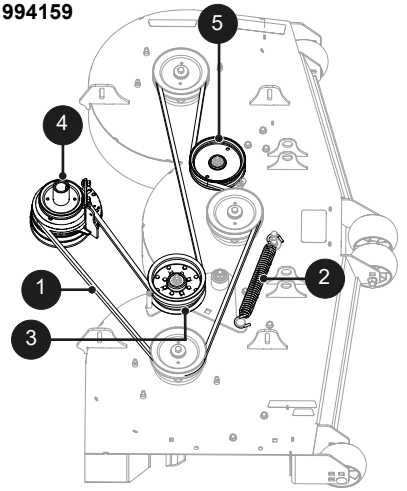

1. PTO Belt
2. Spring
3. PTO Belt Idler
4. Mower Clutch Sheave
5. Center Sheave

Figure 31

Model 994160

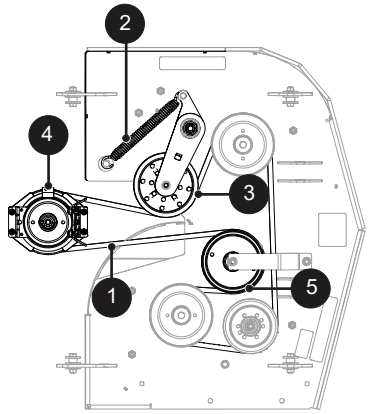

1. PTO Belt
2. Spring
3. PTO Belt Idler
4. Mower Clutch Sheave
5. Center Sheave

Figure 32

Remove Hydro Pump Belt

See Figure 33.

CAUTION: Use care when releasing idler spring tension. Keep body parts well away from idlers when performing this operation.

1. Using a spring puller, slowly remove spring from anchor bolt until all tension is removed.
2. Remove hardware securing clutch stop bracket to frame and remove bracket.
3. Remove hydro pump belt.

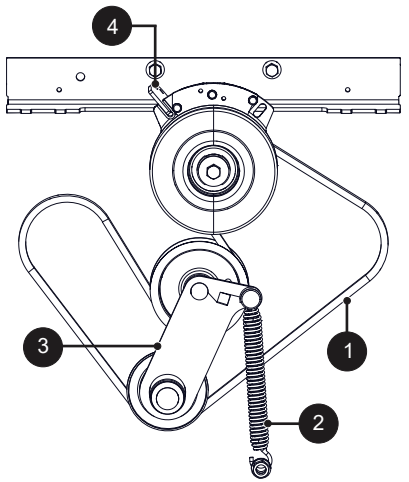

1. Hydro Pump Belt
2. Spring
3. Idler Arm
4. Clutch Stop

Figure 33

Install Hydro Pump Belt

See Figure 33.

IMPORTANT: Hydro pump belt MUST be installed before PTO belt.

1. Install hydro pump belt around sheaves. Route belt as shown in Figure 33.
2. Reinstall clutch stop bracket and secure with original hardware.
3. Reinstall PTO Belt. See *Install PTO Belt* on page 30.

IMPORTANT: Verify that there are no twists in belts and that they are routed correctly.

4. Close belt access panel and reinstall belt covers.

Install PTO Belt

1. Install PTO belt around deck sheaves. Route belt according to the decal located on the bottom of the floor pan. See Figures 31 and 32.

IMPORTANT: Verify that there are no twists in belts and that they are routed correctly.

2. Close belt access panel and reinstall belt covers.

ADJUST ANTI-SCALP WHEELS

See Figure 34.

The anti-scalp wheels are set at the factory for typical mowing height, but can be adjusted for high or low cutting conditions.

1. Place steering levers in neutral position and engage parking brake.
2. Stop engine, remove key and wait for moving parts to stop and for hot parts to cool.
3. Remove hardware securing anti-scalp wheels to deck and remove wheels.
   - For a very high cutting height, set the anti-scalp wheels in the lowest position on the bracket.
   - For a very low cutting height, set the anti-scalp wheels in the highest position on the bracket.

NOTICE: All anti-scalp wheels MUST be set to the same height.

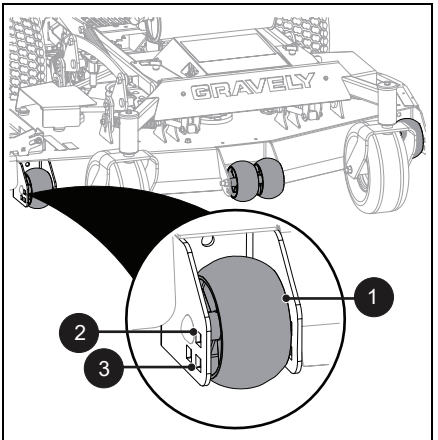

1. Anti-Scalp Rollers
2. Lowest Cutting Height
3. Highest Cutting Height

Figure 34

ADJUST DECK LIFT

Models 994158, 994159

See Figure 35.

The deck-lift assist tension may be adjusted to modify deck lift assist and deck stability. Increased spring tension leads to easier deck lifting, but also decreases deck stability.

1. Loosen jam nuts on anchor bolt.
2. Adjust the spring anchor to the desired setting:
   - Turn spring anchor counterclockwise to decrease lift assist and increase deck stability.
   - Turn spring anchor clockwise to increase lift assist and decrease deck stability.

NOTICE: Excessive spring tension increases the potential for deck to lift and bounce over rough terrain and affect cut quality.

3. Measure the spring length between the outside edges of spring hooks at 3.25" HOC position. Readjust spring tension if necessary. See Figure 36 for spring length range for each deck size.
4. Tighten jam nuts against spring anchor.

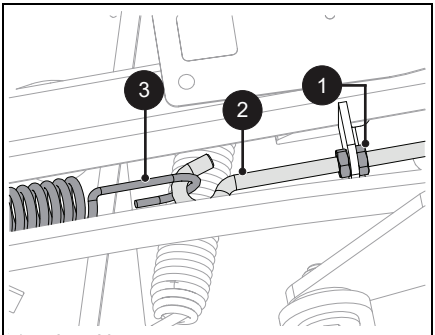

1. Jam Nut
2. Adjustable Spring Anchor
3. Spring

Figure 35

48" / 52" Decks: 25.7 cm ± 0.32 cm (10.12" ± 0.125")

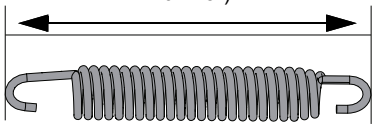

HOC Position: 3.25"

Figure 36

REMOVE / INSTALL MOWER DECK

Remove Deck

1. Place unit in service position. See *Service Position* on page 21.

WARNING: AVOID INJURY! Springs store energy. Keep body parts well away from pinch points when removing the deck.

2. Remove PTO belt from clutch. See *Remove PTO Belt* on page 29.

WARNING: AVOID INJURY. Mower lift arms and lift pedal could cause severe injury if the lift-assist springs are not disconnected before the lift links.

3. Engage transport lock and slowly disconnect lift-assist spring from mower lift arm by unthreading the spring eye-bolt. See Figure 37.

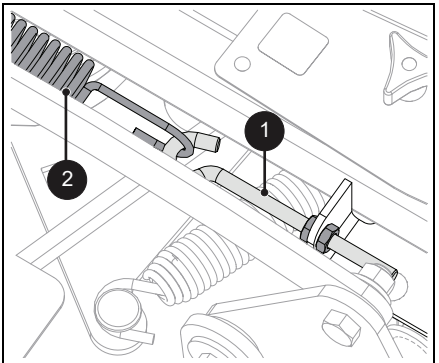

1. Eye-Bolt
2. Deck Lift-Assist Spring

Figure 37

NOTICE: Position supports such as blocks or jack stands under each side of the deck.

4. Release transport lock and slowly lower deck until it rests on supports.
5. Remove hardware securing mower lift links to the deck. See Figure 38.

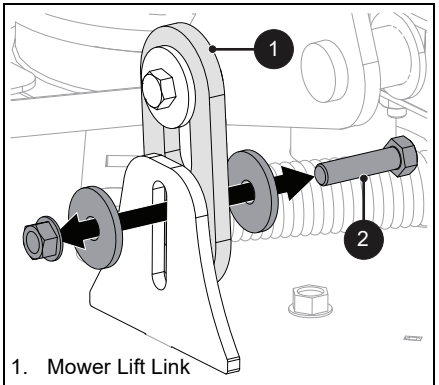

1. Mower Lift Link
2. Mounting Hardware

Figure 38

7. Remove and retain the drag link hardware. See Figure 39.
8. Slide deck out from under unit.

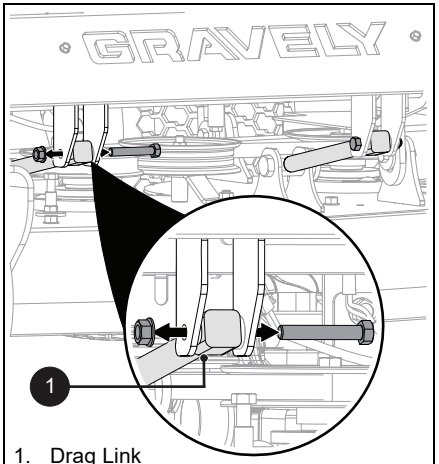

1. Drag Link

Figure 39

Install Deck

1. Position deck under unit.
2. Reinstall drag links to deck with original mounting pins and hardware.
3. Reinstall lift links using original hardware. Torque to 31.2 N•m (23 lb-ft).
4. Install PTO belt. See *Install PTO Belt* on page 30.
5. Raise deck to transport (fully raised) position and reconnect lift assist springs.
6. Adjust spring length to specifications. See *Adjust Deck Lift* on page 31.

LEVEL AND PITCH MOWER DECK

IMPORTANT: Make sure unit is on a flat, level surface and that tires are inflated to the recommended pressures.

Check Blade Level and Pitch

1. Place steering levers in neutral position and engage parking brake.
2. Stop engine, remove key and wait for moving parts to stop and for hot parts to cool.
3. Raise mower deck to 3.25" cutting height.
4. Place blocks at each corner of the deck to support the weight of the deck.

NOTICE: Place blocks under the bottom edge of the deck, not under the reinforcement bar welded along deck face.

See Figure 40.

5. Position mower blades so ends point left to right across the width of the deck.
6. Measure the distance between the ground and cutting edge of the left blade and right blades. Distances should be within 4.7 mm (3/16”).

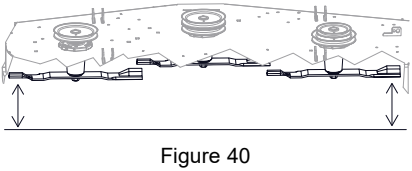

Figure 40

See Figure 41.

7. Position mower blades so ends point front to back and measure the following:
   - At the front of the deck, measure the distance between the ground and the cutting edge of the middle blade.

- At the rear of the deck, measure the distance between the ground and the cutting edge of the left and the right blades.

8. The cutting edge at the front of the deck should be 3.2 mm (1/8") lower than the cutting edges at the rear of the deck.

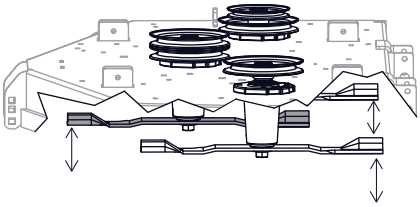

Figure 41

If measurements are out of range, raise the low side of the deck using the height adjusters on the deck lift brackets. See *Adjust Blade Height* on page 33.

Adjust Blade Height

See Figure 42.

1. Park unit on a flat, level surface.
2. Stop engine, remove key and wait for moving parts to stop and for hot parts to cool.
3. Set mower deck to transport (fully raised) position.
4. Position mower blades so ends point front to back.
5. Place spacers under mower blade tips.

IMPORTANT: Place taller spacers in rear blade position to set deck pitch. For example, 7.6 cm (3") front spacers and 7.9 cm (3 1/8") rear spacers will set deck to 0.3 cm (1/8") front pitch.

6. Set deck to 7.6 cm (3") HOC position and lower deck onto spacers.
7. Loosen deck adjustment hardware on the four deck hangers. If not adjusted properly, bolt location should move up or down in the adjustment slots.
8. Tighten deck adjustment hardware.
9. Set mower deck to transport (fully raised) position and remove spacers.

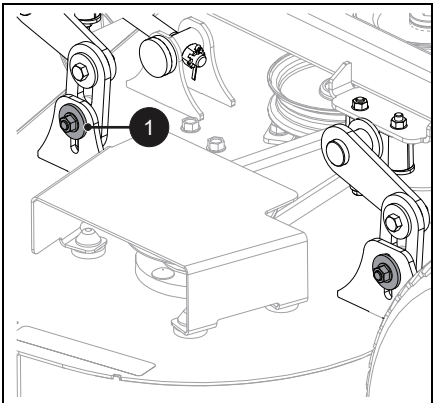

1. Deck Adjustment Hardware

Figure 42

ELECTRICAL SERVICE

See *Controls and Features* on page 13 for fuse box location.

See Figure 43.

Replace Fuse

IMPORTANT: To avoid damaging the circuit, replace fuses with fuses of the same amperage (A) rating. Determine the cause of electrical failure and repair before replacing failed electrical components.

1. Press locking clip and pull fuse box down from cover.
2. Remove defective fuse.
3. Determine cause of fuse failure and repair condition.
4. Install new fuse.
5. Insert fuse box into cover and push up until locking clip snaps into place.

Replace Relay

NOTICE: Relays are interchangeable. Use only quality replacement parts.

1. Press locking clip and pull fuse box down from cover.
2. Remove defective relay.
3. Determine cause of relay failure and repair condition.
4. Install new relay.
5. Insert fuse box into cover and push up until locking clip snaps into place.

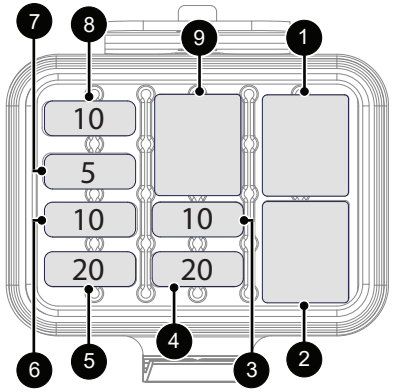

1. PTO Relay
2. Run Relay
3. Time Delay Fuse 10A
4. Main Fuse 20A
5. Charge Fuse 20A
6. Control Fuse 10A
7. Auxillary Fuse 5A
8. PTO Fuse 10A
9. Time Delay Relay

Figure 43

TROUBLESHOOTING

Problem	Probable Cause	Correction
Engine does not crank.	PTO engaged.	Disengage PTO.
	Parking brake disengaged.	Engage parking brake.
	Loose or corroded battery cables.	Clean and tighten battery cables. See *Clean Battery* on page 26.
	Discharged battery.	Charge battery. See *Charge Battery* on page 26.
	Faulty starter.	See your Gravely dealer.
	Blown fuse.	Check main fuse and replace if necessary.
	Failed relay.	Check relays in fuse block and replace if necessary
	Loose or broken wires.	Check wire harness and connections.
	Weak battery.	Check voltage and charge if required. See *Charge Battery* on page 26.
Engine cranks but does not start.	Fuel tank empty.	Fill fuel tank. See *Before Operation* on page 17.
	Faulty spark plug.	Replace spark plug. Refer to Engine Manual.
	Air cleaner is plugged or dirty.	Clean or replace air cleaner. Refer to Engine Manual.
	Fuel filter is dirty.	Clean or replace fuel filter. Refer to Engine Manual.
	Faulty engine.	Refer to Engine Manual or see your Gravely dealer.
	Weak battery.	Check voltage and charge if required. See *Charge Battery* on page 26.
Oil pressure light is on.	Oil pressure is low.	Refer to Engine Manual.
Engine continues to run when ignition key is in the off position.	Ignition ground wire disconnected.	Connect ground wire to clean metal surface.
	Ignition switch failure.	Replace ignition switch. See your Gravely dealer.
PTO or mower blades do not engage or shut off.	Operator presence switch not depressed.	Depress operator presence switch by holding down left steering control handle.
	Faulty PTO switch.	Check the electrical system to the clutch for damage or wear. See your Gravely dealer.

TROUBLESHOOTING		
Problem	**Probable Cause**	**Correction**
Unit does not drive.	Parking brake engaged.	Disengage parking brake.
	Transmission bypass levers open.	Close transmission bypass levers. See *Move Unit Manually* on page 20.
	Hydraulic oil level low.	Add hydraulic oil. See *Check Hydraulic Oil Level* on page 22.
	Faulty hydraulic drive system.	See your Gravely dealer.
Blades do not stop within 7 seconds.	Clutch brake plates worn.	See your Gravely dealer.

STORAGE

WARNING: AVOID INJURY. Read and understand entire *Safety* section before proceeding.

SHORT-TERM STORAGE

IMPORTANT: NEVER wash unit with high pressure water or store outdoors.

1. Allow unit to cool and clean with mild soap and water.
2. Tighten all hardware to correct specifications.
3. Inspect unit for visible signs of wear or damage. Repair as needed.
4. Prepare fuel system for storage.

NOTICE: Gravely recommends using a quality fuel stabilizer in all fuel. Gasoline left in the fuel system without a stabilizer, even for short periods of time, deteriorates and leaves gummy deposits in the system that may damage the carburetor and fuel hoses, filter and tank. For the best effectiveness, add stabilizer to all fuel containers whenever purchasing fuel. Add the stabilizer to the container before adding fuel.

   a. Add Gravely fuel stabilizer (see *Service Parts* on page 22) or equivalent according to manufacturer's instructions to the fuel tank and any fuel containers with remaining fuel.
   b. Operate engine outdoors for at least five minutes to allow stabilizer to reach the carburetor.

5. Turn key to off position and remove from ignition.
6. Store unit in a cool, dry, protected area. DO NOT store unit outdoors.

LONG-TERM STORAGE

1. Perform short-term storage procedures.
2. Lubricate as directed in *Maintenance Schedule* on page 22.
3. Touch-up all scratched painted surfaces.
4. Remove and charge battery as directed in *Charge Battery* on page 26. Store battery in a cool, dry, protected area.
5. Store unit in a cool, dry, protected area. Do not store unit outdoors.

START-OF-SEASON PREPARATION

1. Before adding fuel for the first time after long-term storage, add fresh, stabilizer-treated fuel to fuel tank and any fuel containers with remaining fuel.
2. Charge and install the battery.

ACCESSORIES

See your authorized Gravely dealer to add these optional accessories to your unit.

Description	Part No.
16.19" Laser-Edge Mower Blade Kit (Models 994159, 994160)	79219200
18" Laser-Edge Mower Blade Kit (Model 994158)	79219300
16.25" Laser-Edge Mulch Blade Kit (Models 994159, 994160)	79219800
18" Laser-Edge Mulch Blade Kit (Model 994158)	79219900
Light Kit	79402800
32" Mulch Kit (Model 994160)	79403200
48" Mulch Kit (Model 994159)	79404600
52" Mulch Kit (Model 994158)	79220200
32" Operator Controlled Discharge Baffle (OCDB) Kit (Model 994160)	79403400
48" / 52" Operator Controlled Discharge Baffle (OCDB) Kit (Models 994158, 994159)	79404500

SPECIFICATIONS			
Model Number	**994158**	**994159**	**994160**
Description	Z-STANCE 52	Z-STANCE 48	Z-STANCE 32
Engine	Kawasaki FS651		Kawasaki FS600
Displacement – cm^3 (in^3)	726 (44.3)		603 (36.8)
High Idle – RPM (min.)	3600 ± 100		
Liquid or Air Cooled	Air		
Speed			
Forward Maximum – km/h (mph)	11.3 (7)		
Reverse Maximum – km/h (mph)	4.8 (3)		
Turning Radius	Zero		
Electrical			
Starter	Electric		
Battery	12-Volt Maintenance-Free 275, CCA 10U1L		
Power Take-Off	Electric PTO Clutch/Brake		
Fuel			
Fuel Type	Refer to engine manual		
Tank Capacity – L (Gal)	17.0 (4.5)		
Transmission			
Type	Hydrostatic Drive		
Transmission Oil	Use 15W-50 Full-Synthetic Hydraulic Fluid (Gravely p/n 00057100) or equivalent		
Hydraulic Oil Filter	Yes		
Size and Weight			
Length – cm (in.)	166.3 (65.5)		
Width – cm (in.) Discharge Chute: Down Discharge Chute: Up	169.7 (66.8) 139.7 (55.0)	154.9 (61.0) 125.7 (49.5)	113.8 (44.8) 83.3 (32.8)
Weight – kg (lbs)	337.5 (744)		303.5 (669)
Tires			
Front Tire Size – in.	11 x 6-5		
Rear Tire Size – in.	20 x 10-8		20 x 6.5-8
Rear Tire Pressure – kPa (psi)	83 – 103 (12 – 15)		
Mower Deck			
Cutting Width – cm (in.)	132.1 (52)	121.9 (48)	81.3 (32)
Cutting Height – cm (in.)	3.8 – 11.4 (1.5 – 4.5)		5.1 – 11.4 (2 – 4.5)
Cutting Height Increments – cm (in.)	.635 (.25)		

Outdoor Power Equipment Limited Warranty

AriensCo warrants to the original purchaser that Gravely brand products purchased on or after 09/01/2022 will be free from defects in material and workmanship for the time period noted in the chart below.

If any product, EXCEPT AXIS skidsteer, is rented or leased, then the duration of these warranties shall be 90 days after the date of purchase.

An authorized Gravely dealer will repair any defect in material or workmanship, and repair or replace any defective part, subject to the conditions, limitations and exclusions set forth herein. Such repair or replacement will be free of charge (labor and parts) to the original purchaser; except as noted below. Pick-up and delivery are at the owner's expense.

The warranty code is found on the model and serial number identification label on the unit.

Warranty Code	Product Group	Warranty Period
AA	Serialized Attachments	1 Year.**
AB	Serialized Attachments	2 Years.**
CH	Pro-Turn® Z and Pro-Turn ZX Mowers	4 Years or 750 Hours.*
CJ	Pro-QXT®	4 Years or 500 Hours.*
CK	Compact-Pro® and Pro-Walk® Hydro Mowers	4 Years or 750 Hours.* No Hour Limit for First 2 Years.
CL	Pro-Turn 100 and Pro-Stance® Mowers	5 Years or 1000 Hours.* No Hour Limit for First 2 Years.
CM	Pro-Turn 200 and 300 Mowers	5 Years or 1250 Hours.* No Hour Limit for First 2 Years.
CN	Pro-Turn 500, 600, Mach-One and Pro-Stance Ultra Mowers	5 Years or 1500 Hours.* No Hour Limit for First 2 Years.
CS	AXIS® Skidsteer	1 Year or 1000 Hours.* Includes Rented or Leased Products.
CT	OVIS Mowers	2 Years or 250 Hours.*
HE	ZT Mowers	2 Years or 150 Hours.*
HF	ZT X Mowers	3 Years or 300 Hours.*
HG	ZT XL Mowers	4 Years or 400 Hours.*
HH	ZT HD and Z-Stance Mowers	4 Years or 500 Hours.*
UG	Atlas JSV®	1 Year.

* Whichever comes first.

** AXIS Attachments see Limitations chart below.

Special Extensions

The chart below details special **extensions** to warranty terms. Warranty terms are total time periods covered. If any product is rented or leased, there are no extensions to the 90-day warranty.

Warranty Code	Warranty Term Extension	Warranty Period	Detail
CL, CM, CN	Mower Deck Shell and Main Frame	Lifetime Limited.	Warranty is for parts only after the initial warranty period. Components are covered for manufacturer's defect only, not wear.

Exclusions and Limitations

The charts below detail special **exclusions and limitations** to this warranty.

Warranty Term Exclusions	Warranty Period
Air filters, brake arms, brake linings, brake shoes, brushes, cutters, fuel filters, halogen headlights, knives, halogen light bulbs, lubricants, mower blades, flail blades, oil, oil filters, spark plugs, scraper blades, shear bolts, skid shoes and spoon tines.	Components are not covered under warranty.

Hydro-Gear Transaxle Limitation
See Hydro-Gear warranty. The warranty is administrated by AriensCo. Refer to www.gravely.com for warranty statement.

Warranty Term Limitations	Warranty Period
Cloth, Plastic and Rubber Components. Mufflers, Tires and Belts.	Components are covered for manufacturer's defect only, not wear.
AXIS Bucket and Fork Attachments	Warranty is administered by Erskine Attachments, LLC. Follow Erskine warranty statement in back of Attachment Operator's Manual.

Exclusions – Items Not Covered by This Warranty

- Parts that are not genuine Gravely service parts are not covered by this warranty and may void the warranty if the parts result in premature wear or damage to the product.
- Damages resulting from the installation or use of any part, accessory, or attachment which is not approved by the AriensCo for use with product(s) identified herein are not covered by this warranty.
- Any misuse, alteration, improper assembly, improper adjustment, neglect, or accident which requires repair is not covered by this warranty.
- Repairs or adjustments required due to failure to use fresh fuel or failure to properly prepare the unit for periods of non-use.
- **Use of gasoline blends exceeding 10% ethanol voids any and all warranties.**
- **Any tampering with the hour meter voids any and all warranties.**
- Products are designed to the specifications in the area that the product was originally distributed. Different areas may have significantly different legal and design requirements. This warranty is limited to the requirements in the area in which the unit was originally distributed. AriensCo does not warrant this product to the requirements of any other area. Warranty service is limited to service within the area originally distributed.
- In countries other than the United States and Canada, contact the AriensCo dealer for warranty policies that govern within your country. Rights may vary from country to country and within any one country.

Evaporative Emissions Control Warranty Exception

As required by the California Air Resources Board (CARB) and the US Environmental Protection Agency (EPA) the evaporative emissions control system is warranted to the ultimate purchaser, and any subsequent owner, for two years.

The CARB and EPA evaporative emissions control system warranty is described in a separate evaporative emission control warranty statement.

Special Exclusions for Job-site Vehicles

The following uses void the warranty terms on Atlas JSV (Warranty Code UG) vehicles:

- Renting or leasing the vehicle.
- Using the vehicle to tow or carry loads in excess of the limits specified in the operator's manual.
- Modifying the vehicle with parts and accessories that are not genuine or authorized Gravely parts or accessories.
- Modifying the vehicle without express written authorization from Gravely.
- Operating the vehicle when it has not been completely and properly assembled and pre-delivered by an authorized Gravely dealer.

Battery Warranty

Battery warranty is one year. Units used for rental or lease have no exceptions to the 90-day warranty. Total battery claim reimbursement will not exceed 45.00 USD.

Transmissions

The chart below details transmission warranty information. Transmission warranty terms may vary from the specific terms of this warranty. If inconsistent, the terms of the transmission warranty shall apply to the transmission and its component parts.

Transmission Manufacturer	Detail
Hydro-Gear Transaxle	See Hydro-Gear warranty. The warranty is administrated by AriensCo. Refer to www.gravely.com for warranty statement.
Parker Hannifin Drive & Valve Systems	Parker Transaxles, Pumps, Wheel Motors and Valves are warranted for the length of equipment warranty period. Refer to Warranty Code chart above. Warranty is administered by AriensCo.

Engines

The chart below details engine warranty information. Engine warranty terms may vary from the specific terms of this warranty. If inconsistent, the terms of the engine warranty shall apply to the engine and its component parts.

Engine Manufacturer	Detail	
Gravely V-Twin	Serial Number 0000400 and lower	4 Years or 500 Hours, whichever comes first. Refer to www.gravely.com for warranty statement.
	Serial Number 0000401 and higher	4 Years or 750 Hours, whichever comes first. Refer to www.gravely.com for warranty statement.
Yamaha	Yamaha-branded engines are warranted by the manufacturer and the warranty is administrated by AriensCo. Refer to www.gravely.com for warranty statement.	
Briggs & Stratton, Kawasaki, Kohler, Kubota	Covered by the engine manufacturer's warranty. Refer to the engine manufacturer's warranty statements.	

Parts and Accessories

Service replacement parts and non-serialized accessories are warranted for 90 days from date of purchase. Labor is not included.

Customer Responsibilities

Register the product immediately at the time of sale. If the dealer does not register the product, the customer must register the unit on-line at www.gravely.com.

To obtain warranty service, the **original purchaser** must:

- Ensure that the maintenance and adjustments explained in the Operator's Manual are routinely completed.
- Promptly notify AriensCo or an authorized Gravely service representative of the need for warranty service.
- Transport the product to and from the place of warranty service at owner's expense.
- Have the warranty service performed by an authorized Gravely service representative.

To find an authorized dealer use the dealer locator on our websites, or contact us by mail or phone.

Globally except Australia or New Zealand:	Australia:	New Zealand:
AriensCo 655 W. Ryan Street Brillion, WI 54110 Phone: (920) 756 - 4688 www.gravely.com	Roy Gripske & Sons Pty Ltd 11 Sodium Street Narangba Queensland 4504 Australia Phone: (61130) 036 3004 www.rgs.com.au	Masport Ltd 320 Ti Rakau Drive East Tamaki Auckland 2013 New Zealand Phone: 0800 627 7678 www.masport.co.nz

Disclaimer

AriensCo may from time to time change the design of its products. Nothing contained in this warranty shall be construed as obligating the AriensCo to incorporate such design changes into previously manufactured products, nor shall such changes be construed as an admission that previous designs were defective.

Limitation of Remedy and Damages

AriensCo liability under this warranty, and under any implied warranty that may exist, is limited to repair of any defect in workmanship, and repair or replacement of any defective part. AriensCo shall not be liable for incidental, special, or consequential damages (including lost profits). Some states do not allow the exclusion of incidental or consequential damages, so the above limitation or exclusion may not apply to you.

AriensCo shall not be held liable for damages, including premature wear and tear, or injuries caused by installation of unauthorized parts and accessories or for parts and accessories not installed by an authorized Gravely dealer.

Australian Consumer Law

The following applies solely to warranties subject to Subsection 102(1) of the Australian Consumer Law: Our goods come with guarantees that cannot be excluded by the Australian Consumer Law. You are entitled to a replacement or refund for a major failure and for compensation for any other reasonably foreseeable loss or damage. You are also entitled to have the goods repaired or replaced if the goods fail to be of acceptable quality and failure does not amount to a major failure.

Disclaimer of Further Warranty

AriensCo makes no warranty, express or implied, other than what is expressly made in this warranty. If the law of your state provides that an implied warranty of merchantability, or an implied warranty of fitness for particular purpose, or any other implied warranty, applies to AriensCo then any such implied warranty is limited to the duration of this warranty. Some states do not allow limitations on how long an implied warranty lasts, so the above limitation may not apply to you.

This warranty gives you specific legal rights, and you may also have other rights which vary from region to region.

GRAVELY

655 West Ryan St.
Brillion, WI 54110

www.gravely.com

GENUINE OEM PARTS

parts.gravely.com

WARNING: Cancer and Reproductive Harm - www.P65Warnings.ca.gov

ARIENS|CO

PRINTED in WISCONSIN