Parrot Uncle

F6015

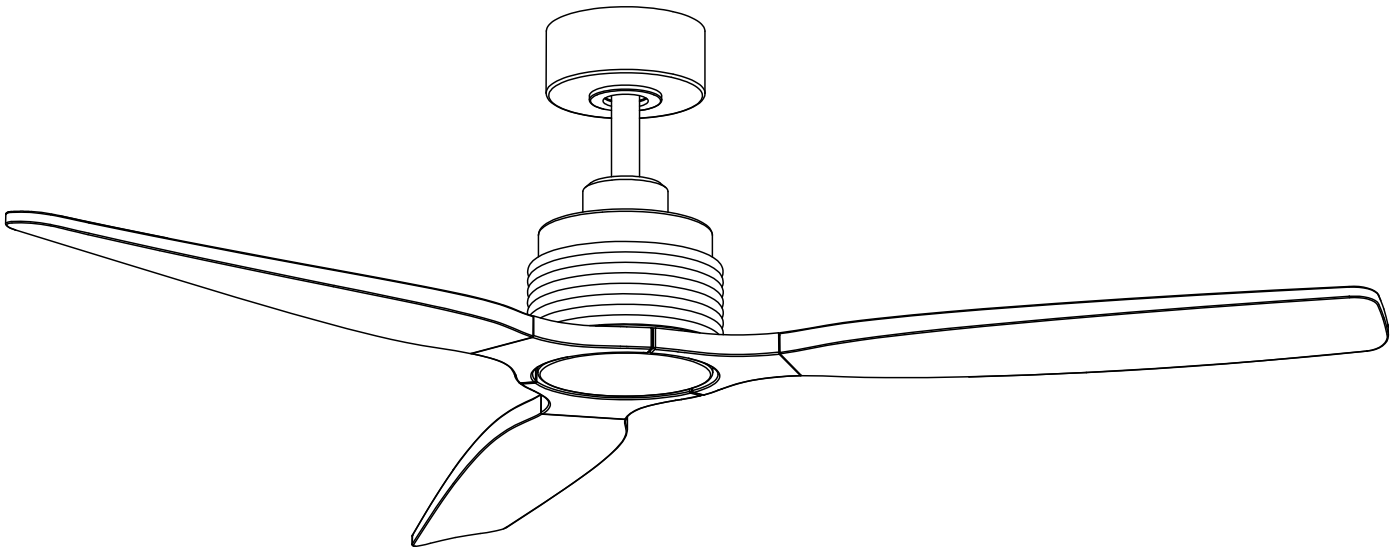

English / Español / Français

www.parrotuncle.com

Parrot Uncle

F6015

Installation & Operating Instructions for the
Parrot Uncle Owner's Installation ,Manual

WARNING: SHUT POWER OFF AT FUSE OR CIRCUIT BREAKER

Sicherheit information

1. To reduce the risk of an electrical blow, electricity on the protective switch or the safety box went out before starting.
2. All wiring must correspond to the NASI/NFPA 70-1999 National Electric Code and local electrical regulations. The electrical installation must be carried out by a qualified and approved electrician.
3. The connection box and support construction must be assembled safely and 35 pounds (15.9 kilos) must be able to transport reliably. Use only output boxes listed with labeling

   "Accepted for fans with a weight of £ 35 (15.9 kilos) or less."
4. The fan must be installed with a minimum distance of 3 m (10 feet) from the posterior edge of the wings to the floor.
5. Do not operate the reverse switch if the fan wings are moving. You have to turn off the fan and stop the wings before reverse the direction of the wing.
6. Do not place objects on the road to wings.
7. To avoid lesions or damage to the fan and other objects, be careful if you work on the fan or clean it.
8. Electrical diagrams only serve as a reference. The lighting rates that are not delivered with the fan must be listed and marked with the valve model that will be installed for use. The switches must be general use switches UL. Take into account the instructions for the appropriate installation included in the lighting rates and the switches.
9. After the electrical connections have been made, the size staircase must be turned up and carefully push to the plug box. The cables must be distributed in such a way that the ground connected driver and the device head are next to the socket.
10. All fixing screws must be verified before installation and, if necessary, followed.

WARNING: To reduce the risk of injury, knife supports (also known as flanges) cannot be folded during installation or after installation. Do not put any object on the path of wings.

WARNING: Remove rubber motor attacks at the bottom of the fan before mounting the wings or try the engine.

WARNING: To avoid the risk of a fire or an electrical blow, this fan should not be used with a semiconductor speed controller.

WARNING: To avoid a possible electric shock, turn off the current in the main security box before wiring. If you feel that you do not have enough knowledge or experience in electrical wiring, communicate with a license electrician.

WARNING: Electrical diagrams only serve as a reference. The optional use of an lighting rate must be on the list and marked with this fan for use.

WARNING: To reduce the risk of fires, electrical discharges or injuries, assemble the device in a socket that with the inscription accepted for fans with a weight of £ 35) or less. It is marked and use the screws supplied with the plug.

TECHNICAL INFORMATION

SKU	Nominal voltage	Nominal output (motor)	light
F6015	120V AC	35W	1 *20W LED included

Parrot Uncle

F6015

Installation & Operating Instructions for the
Parrot Uncle Owner's Installation ,Manual

WARNING: SHUT POWER OFF AT FUSE OR CIRCUIT BREAKER

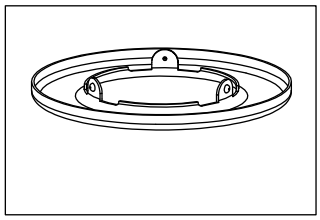

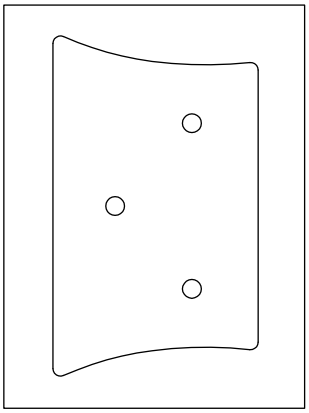

Blade holder X3



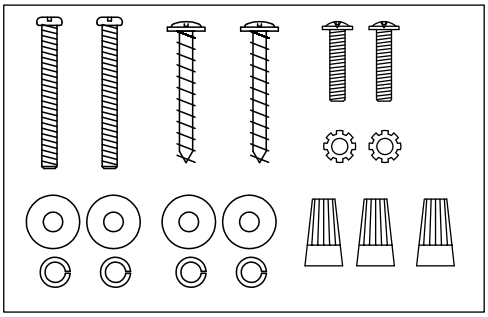

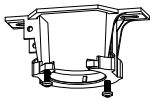

Mounting bracket

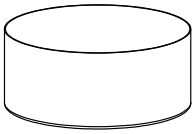

Canopy

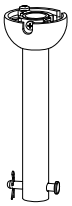

Downrod assembly

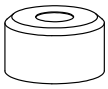

Coupler cover

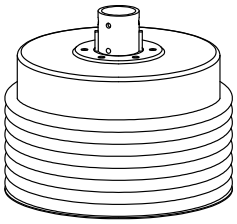

Fan-motor assembly

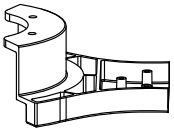

Blade bracket

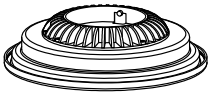

Light kit

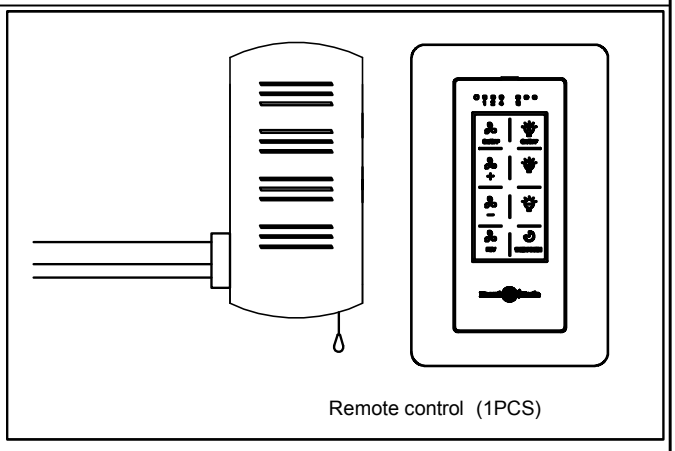

Remote control (1PCS)

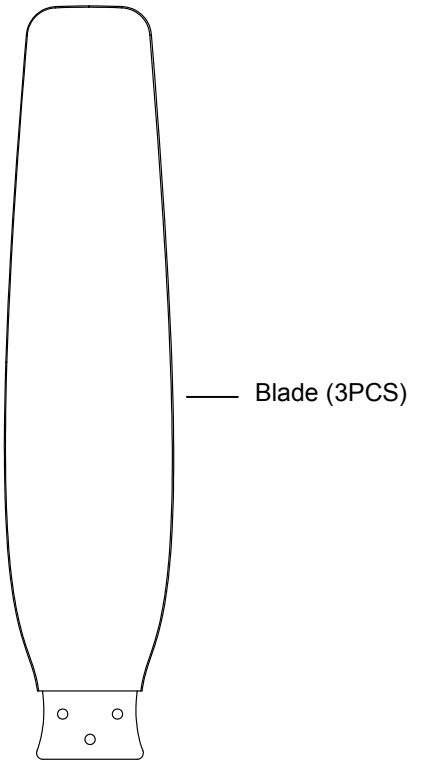

Blade (3PCS)

Pls check whether above accessories are completed or not?Yes,and install.

Parrot Uncle

F6015

Installation & Operating Instructions for the
Parrot Uncle Owner's Installation ,Manual

WARNING: SHUT POWER OFF AT FUSE OR CIRCUIT BREAKER

Attaching the fan to the electrical box

WARNING: To reduce the risk of fire,electric shock or personal injury, mount to an outlet box marked "Acceptable for fan support of 35 lbs . (15.9kg) or less ," and use the screws provided with the outlet box.

NOTE: The mounting bracket(A) is designed to slide into place on an outlet box with the outlet box screws(LL).

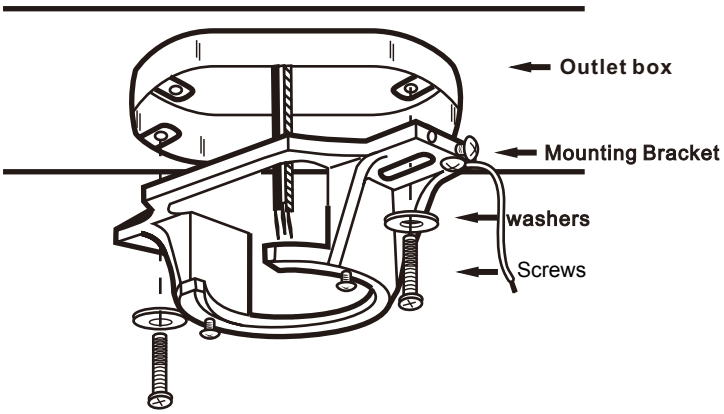

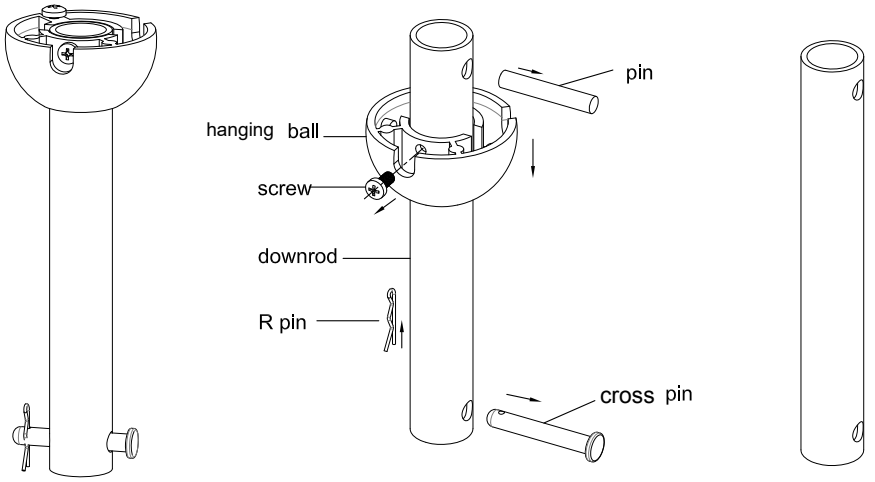

Preparation for the replacement of the extented downrod. Remove the R pin,and corss pin from downrod. Loosen the hanging ball from downrod by removing the screw,slide hanging ball off of downrod and removed pin.

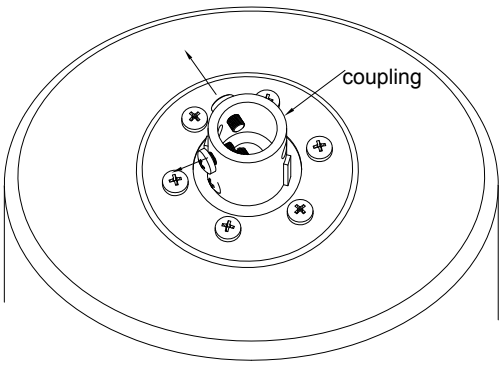

Remove 2 screws on the coupling to prepare for installing the extended downrod.

Parrot Uncle

F6015

Installation & Operating Instructions for the
Parrot Uncle Owner's Installation ,Manual

WARNING: SHUT POWER OFF AT FUSE OR CIRCUIT BREAKER

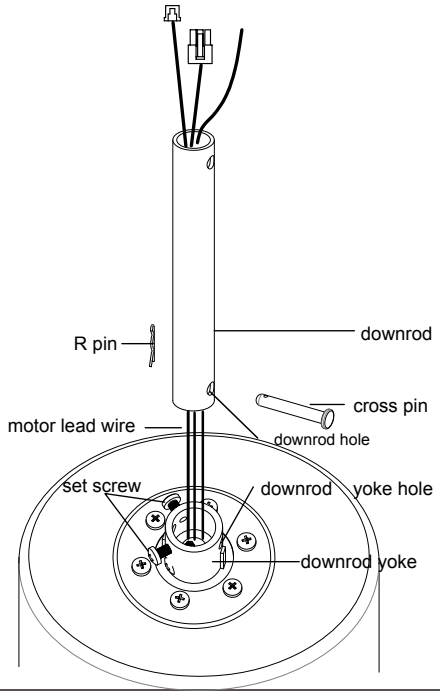

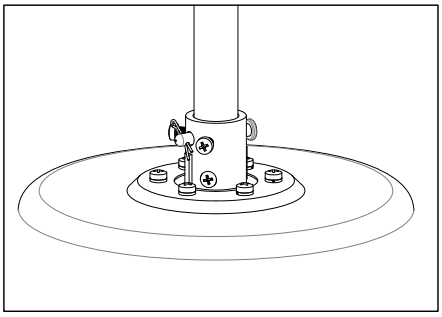

Feed motor lead wires through downrod and insert downrod into downrod yoke. Make sure to align hole in downrod with the hole in downrod yoke. Install yoke cross pin through yoke and downrod. Insert R pin into cross pin until it snaps into place. Tighten set screws in yoke. As shown in samll figure, the downrod and the motor are fixed.

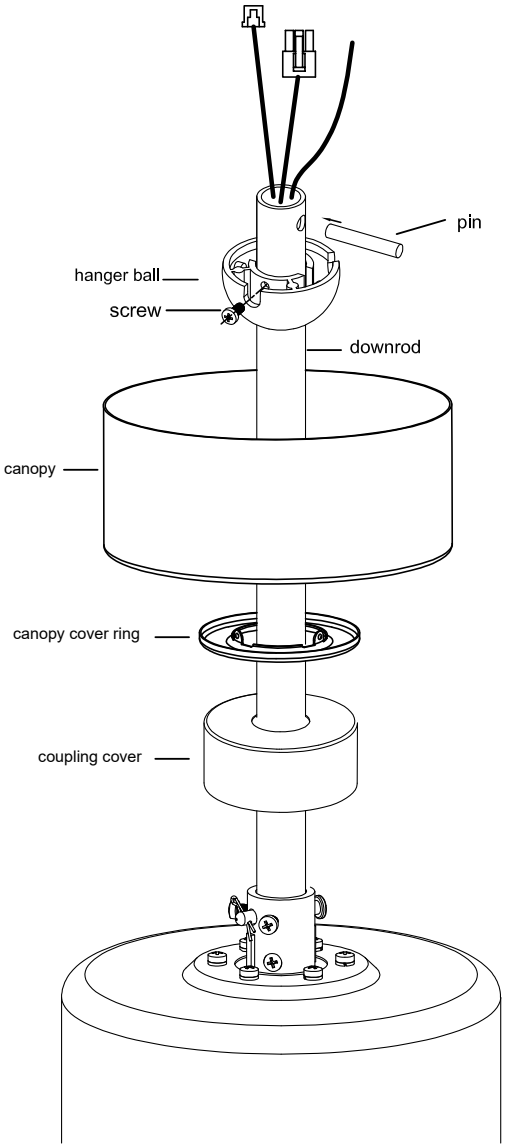

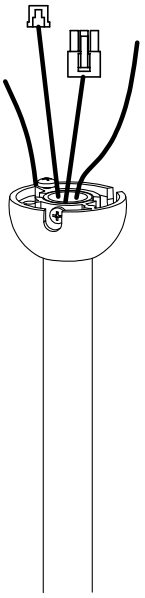

Place downrod assembly into coupling cover,canopy cover ring provided from hardware packs,canopy. Re-install pin into downrod,and slide downrod ball up to the top of the downrod.

Re-install the screw to secure ball to downrod. Lock the screw and the hanger ball is fixed.

Parrot Uncle

F6015

Installation & Operating Instructions for the
Parrot Uncle Owner's Installation ,Manual

WARNING: SHUT POWER OFF AT FUSE OR CIRCUIT BREAKER

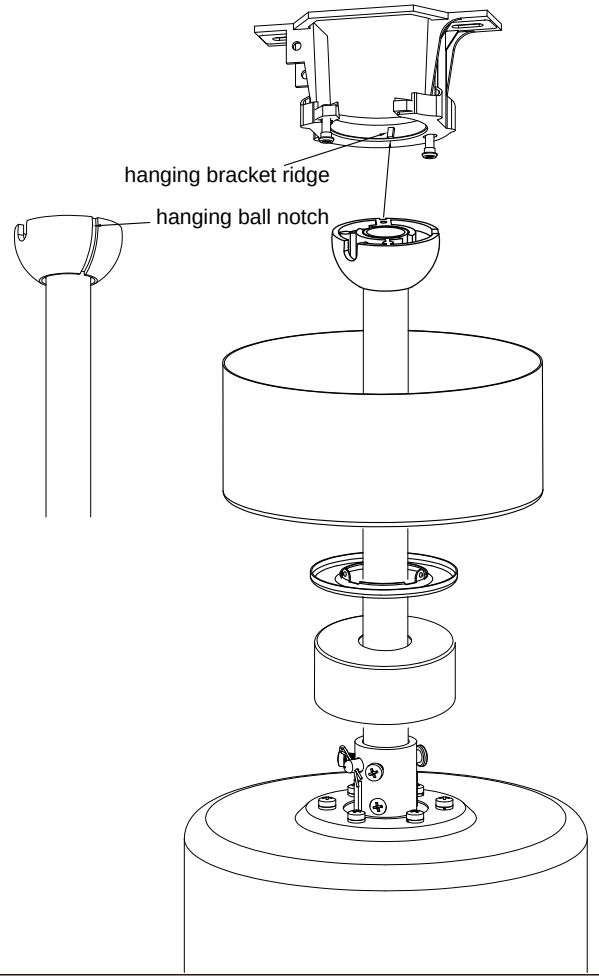

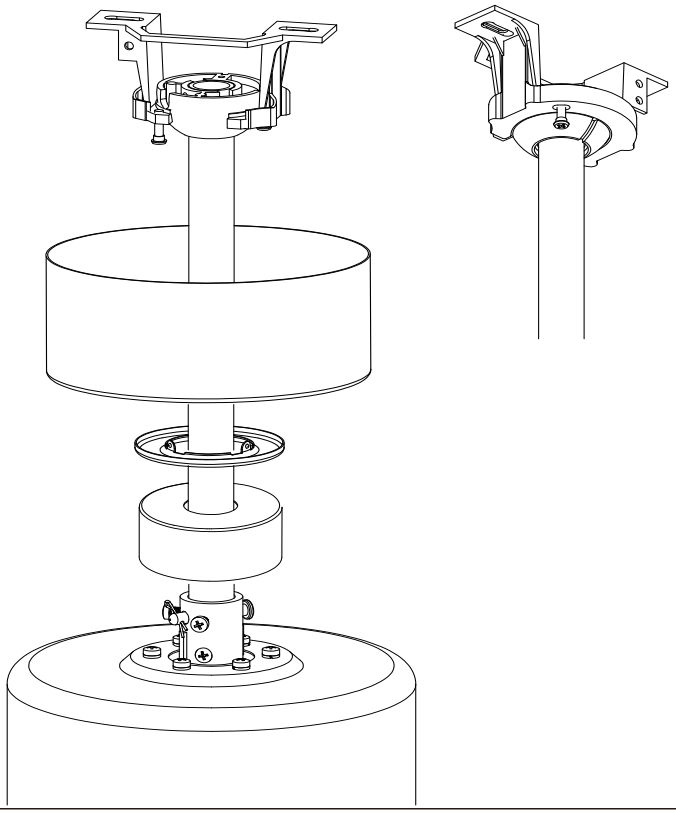

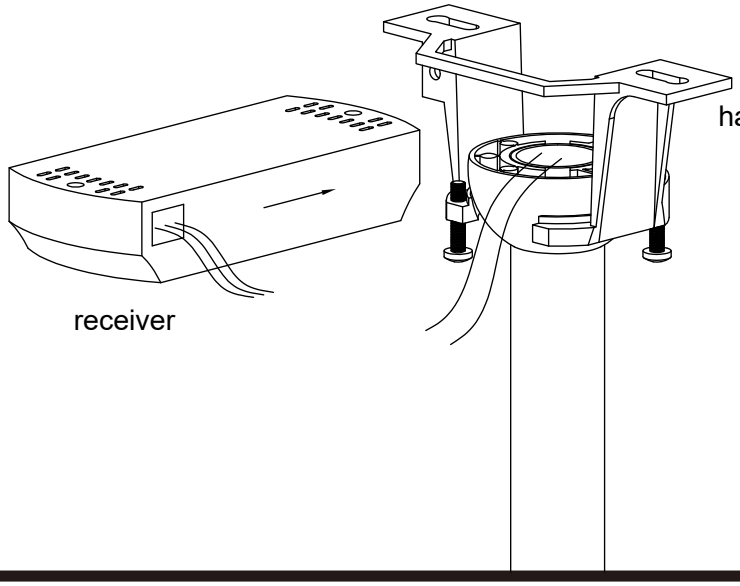

hanging bracket

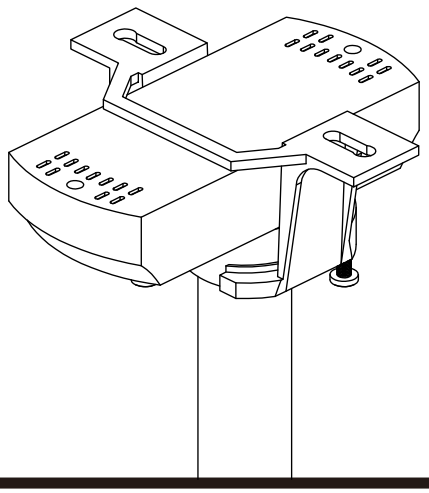

Parrot Uncle

F6015

Installation & Operating Instructions for the
Parrot Uncle Owner's Installation ,Manual

WARNING: SHUT POWER OFF AT FUSE OR CIRCUIT BREAKER

FROM POWER SOURCE
AC 110- 120 VOLT 60Hz .

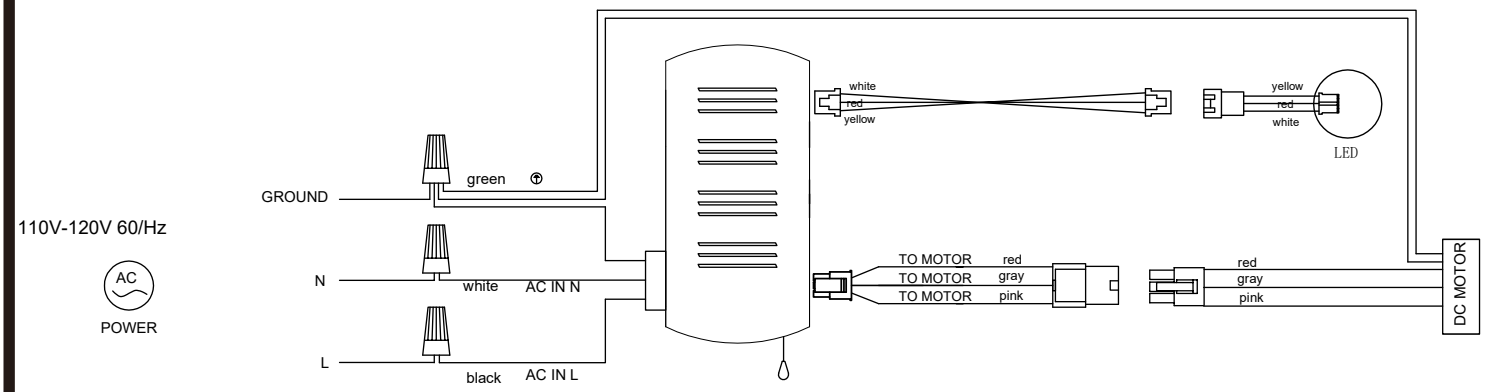

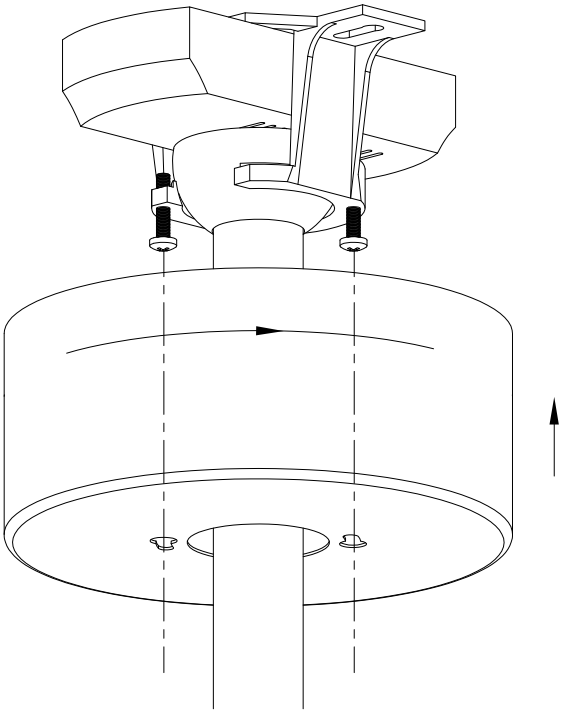

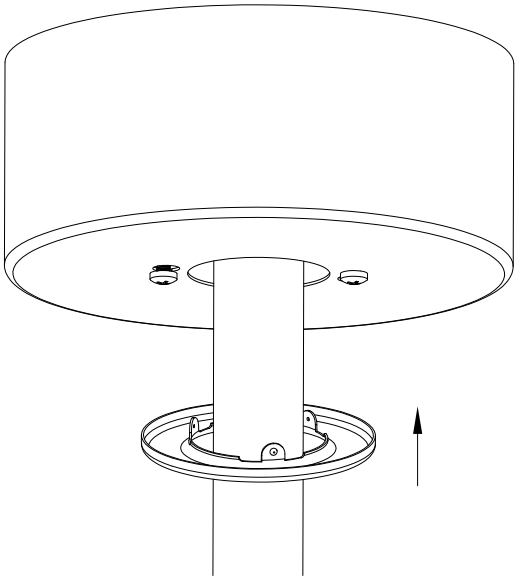

Finish

WARNING: SHUT POWER OFF AT FUSE OR CIRCUIT BREAKER

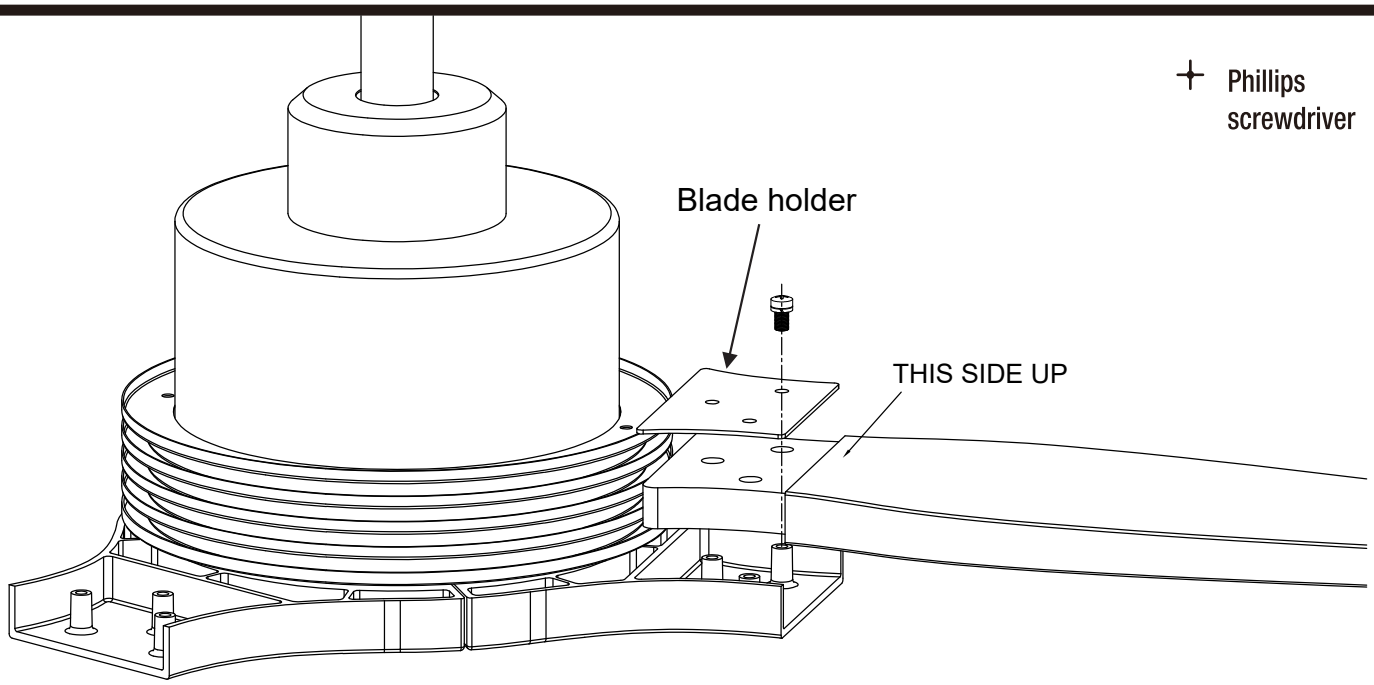

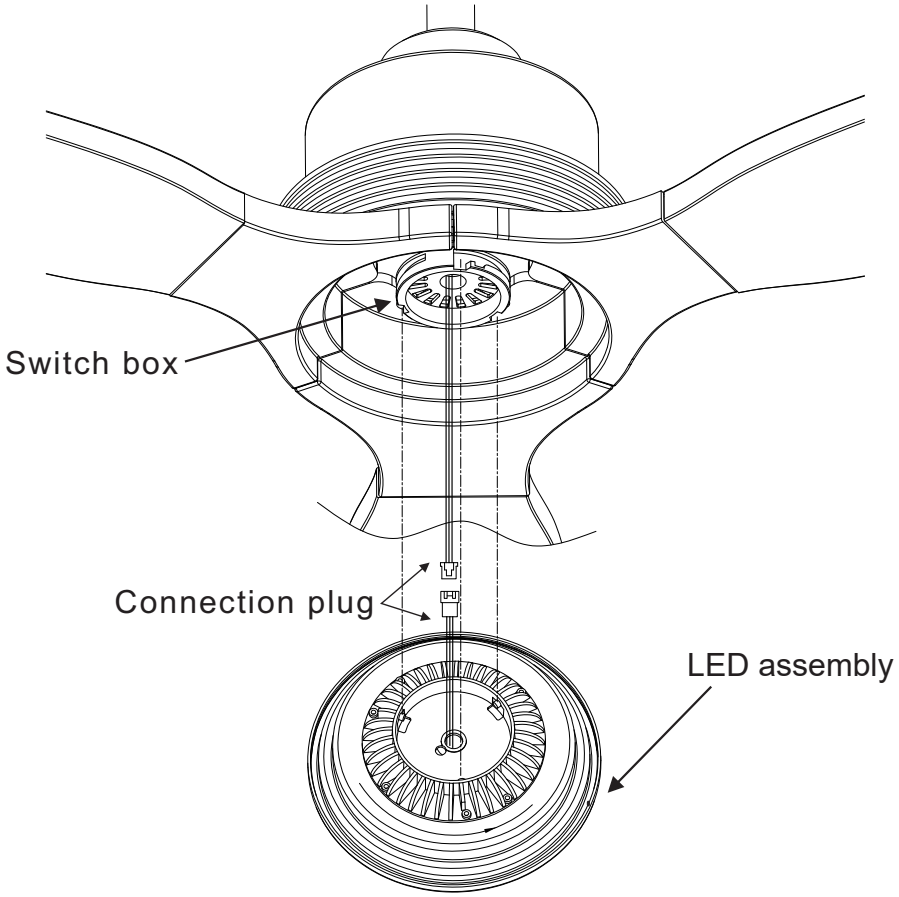

Step 1. While holding the LED assembly under your fan, firmly snap the wire connection plugs together.

Step 2 . Attach the LED assembly to the switch box by twisting tightly .

Note: **This** is a integrated LED light kit assembly and cannot be disassembled to prevent electronic shock.

WARNING: SHUT POWER OFF AT FUSE OR CIRCUIT BREAKER

Remote controller
GENERAL INFORMATION

1.INSTALLING RECEIVER IN CEILING FAN

A. Safety precautions:

WARNING: HIGH VOLTAGE! Disconnect power by removing fuse or switching off circuit breaker.

Electrical wire must meet all local and national electrical code requirements.

2.Wiring diagram:

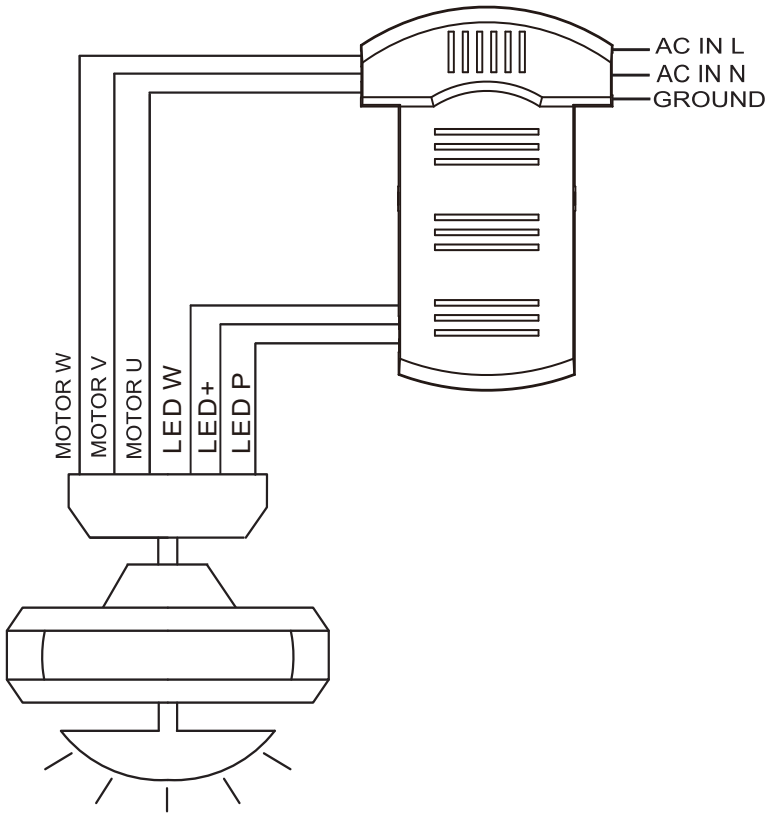

WARNING: SHUT POWER OFF AT FUSE OR CIRCUIT BREAKER

Remote controller

GENERAL INFORMATION

2. OPERATING TRANSMITTER:

A. Install CR 2032 3V volt battery.
(To prevent damage to transmitter, remove the battery if not used for a long time).

B. Store the transmitter away from excessive heat or humidity.

C. Operating the buttons on the panel of the transmitter.

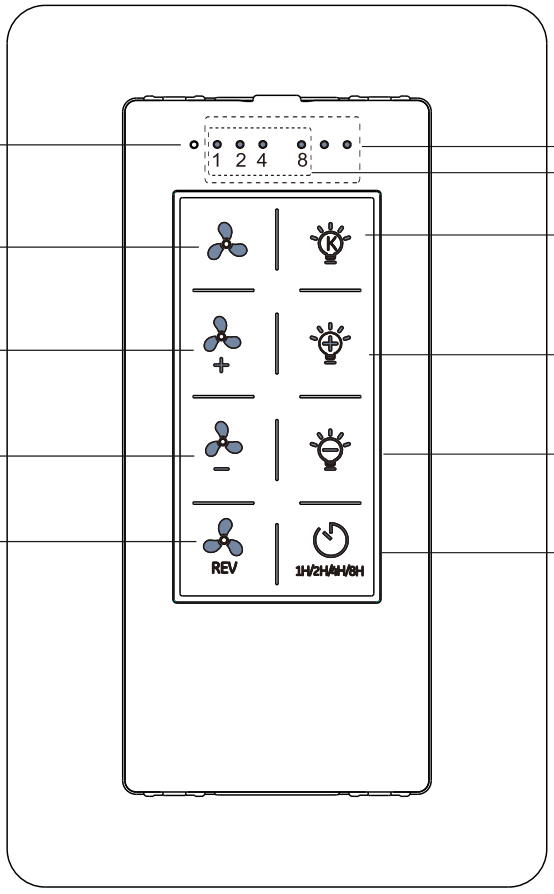

LED Indicator

Speed setting Indicator

Time setting Indicator

FAN ON/OFF

- Press to turn the power ON/OFF Within 5 seconds after power on, hold press 3 seconds to match code.

Light Switch & CCT Setting

- Press to turn the light ON/OFF
- Hold press 2 seconds the key to change the CCT

Fan speed 1 to 6 levels

Light brightness +

Fan speed 6 to 1 levels

Light brightness -

Forward and Reverse

- Press to change Forward/Reverse.
- Within 5 seconds after power on, hold press 3 seconds to clear code.

Timer Settings

- Press once time, fan auto off after 1hr
- Press twice time, fan auto off after 2hr
- Press 3 times, fan auto off after 4hr
- Press 4 times, fan auto off after 8hr
- Press 5 times,Cancel the timer function

D. Setting the codes on the receiver:

1. Learning code matching mode is used between REMOTE CONTROL and receiver. Turn on the supply power within 5 seconds and press the REMOTE CONTROL“FAN ON/OFF” button for 3 seconds, it can load normally after hearing a long sound “bee”, which means learning successfully and it can works normally.(PS: Learning mode is not accepted after turn “ON” the supply power for 5 seconds)

WARNING: SHUT POWER OFF AT FUSE OR CIRCUIT BREAKER

size of product

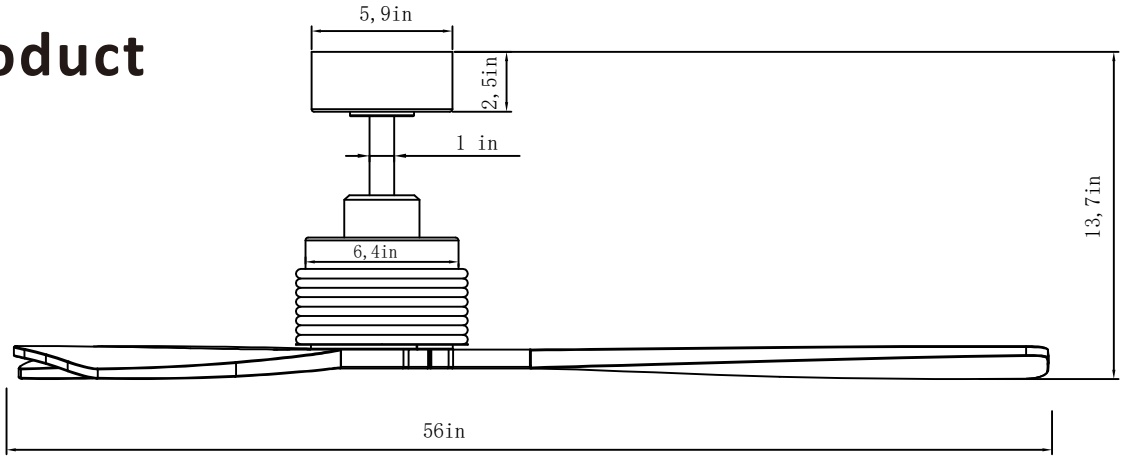

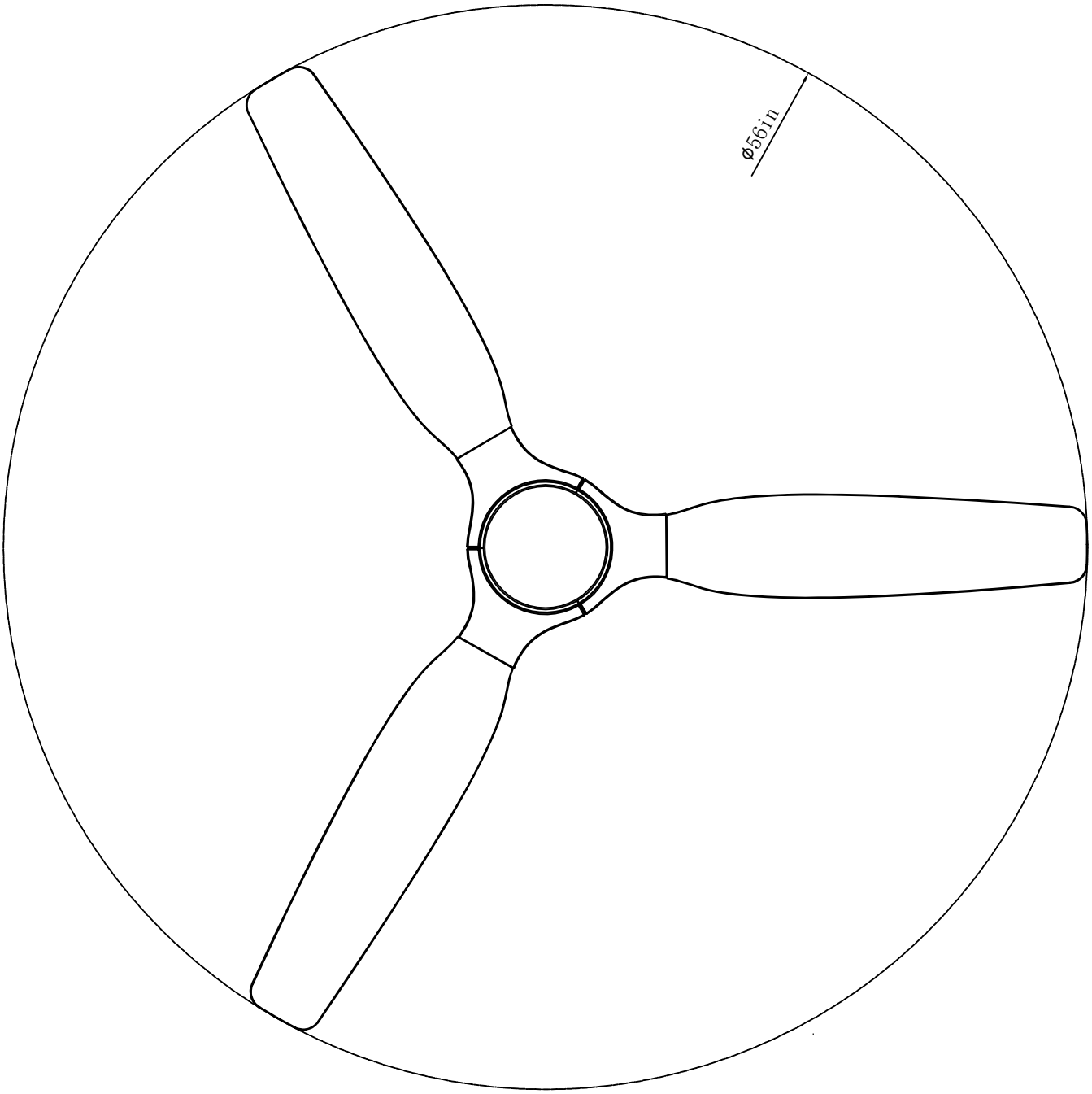

WARNING: SHUT POWER OFF AT FUSE OR CIRCUIT BREAKER

AFTER INSTALLATION

WOBBLE"

The fan blades have been adjusted in the factory to minimize any wobble

NOTE:CEILING FANS TEND TO MOVE DURING OPERATION DUE TO THE FACT THAT THEY ARE MOUNTED ON A RUBBER CROMMET. IF THE FAN WAS MOUNTED RIGIDLY TO THE CEILING, IT WOULD CAUSE EXCESS VIBRATION. MOVEMENT OF A FEW CENTIMENTERS IS QUITE ACCEPTABLE AND DOES NOT SUGGEST ANY PROBLEM

TO REDUCE THE FAN WOBBLE: PLEASE CHECK THAT ALL SCREWS WHICH SECURED THE MOUNTING BRACKET AND DOWNROD ARE SECURE.

BALANCING A WOBBLING CEILING FAN:

For your convenience, a Balancing Kit is included; please follow this procedure when balancing the fan:

1.Check that all blade and blade arm screws are secure.

2.Most fan wobbling problems are caused when blade levels are unequal. Check this level by selecting a point on the ceiling above the tip of one of the blades. Measure this distance.Rotate the fan until the next blade is positioned for measurement. Repeat for each blade. The distance deviation should be equal within 1/8"(0.32cm).

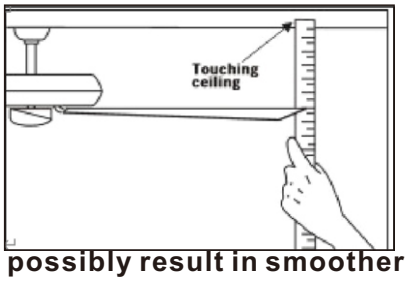

3.Use the enclosed Blade Balancing Kit if the blade wobble is still noticeable.

4.If the blade wobble is still noticeable, interchanging two adjacent (side by side) blades can redistribute the weight and possibly result in smoother operation. WARNING: TO REDUCE THE RISK OF PERSONAL INJURY, DO NOT BEND THE BLADE ARM WHILE INSTALLING, BALANCING THE BLADES, OR CLEANING THE FAN. DO NOT INSERT FOREIGN OBJECTS BETWEEN ROTATING FAN BLADES.

NOISE

When it is quiet(especially at night) you may hear occasional small noises. This is normal. Please allow a 24-hour "breaking-in" period, most noises associated with a new fan disappear during the time.

CARE AND CLEANING

1.Periodic cleaning of your ceiling fan is the only maintenance required. Use a soft brush or lint free cloth to avoid scratching the paint finish. Please make sure to turn off electricity power before you clean your fan

2.Do not use water when cleaning your ceiling fan. It could damage the motor or the blades and create the possibility of an electrical shock.

3.Motor has permanently lubricated ball bearing. No need to oil

NOTE: MAKE SURE THE POWER IS OFF AT THE ELECTRICAL PANEL BOX BEFORE YOU ATTEMPT ANY CLEANING OR REPAIRS.