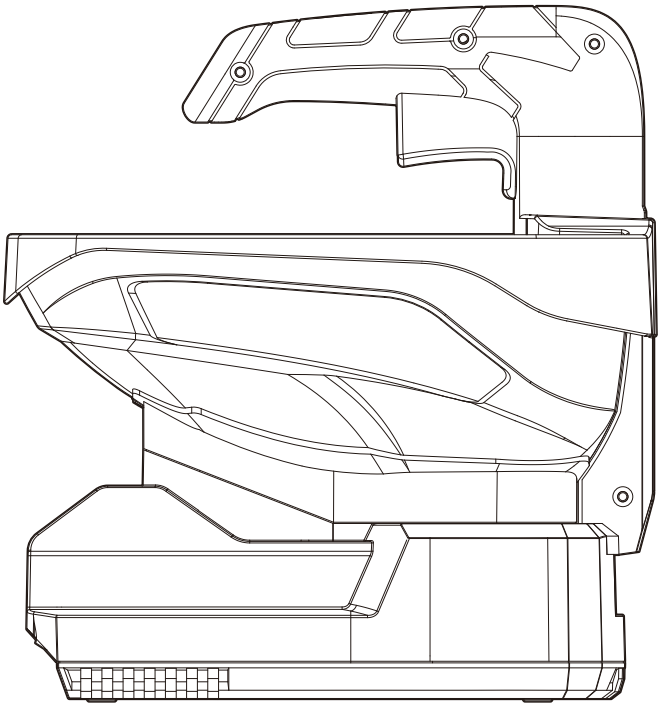

20V Cordless Spreader	EN	P05
20V Cordless Spreader	F	P18
20V Cordless Spreader	ES	P31

HELPLINE NUMBER
NUMÉRO DU SERVICE D'ASSISTANCE
NÚMERO DE LÍNEA DE AYUDA
1-866-354-WORX (9679)

WG869 WG869.X

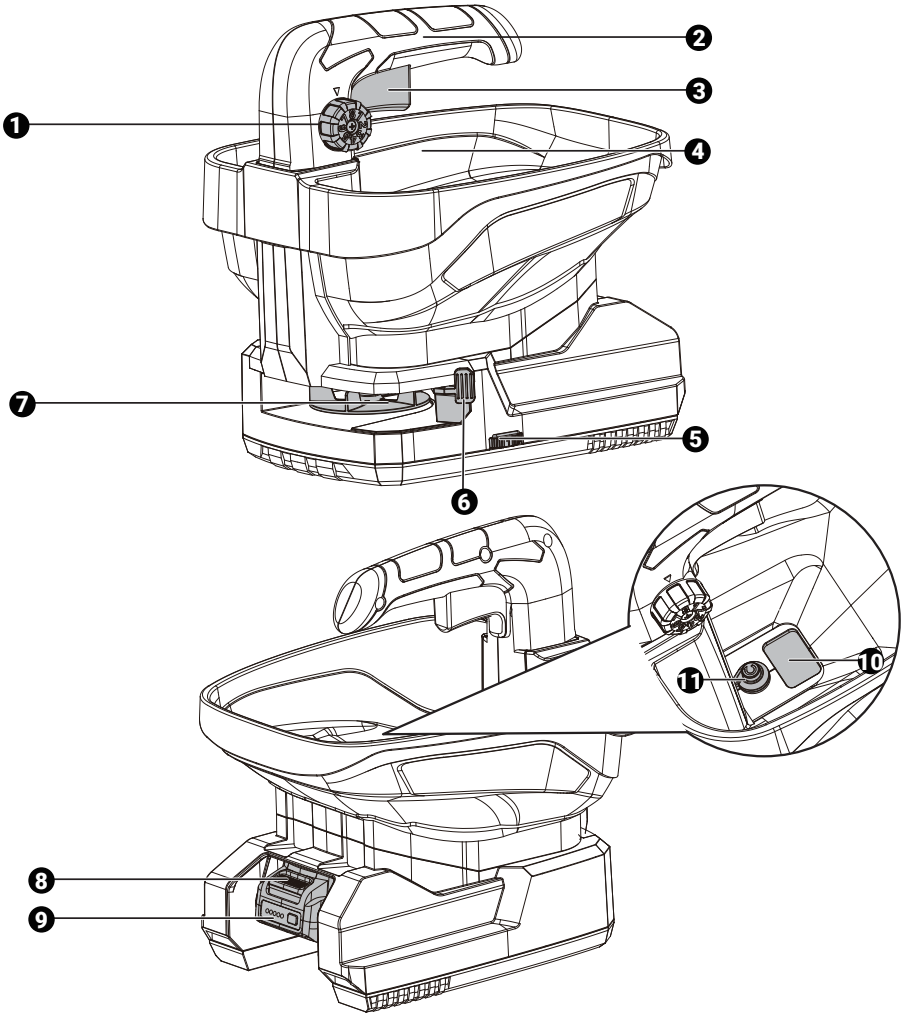
1
2
3
4
5
6
7
8
9
10
11

A

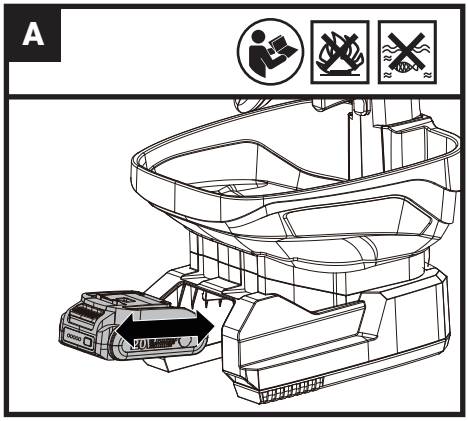

B

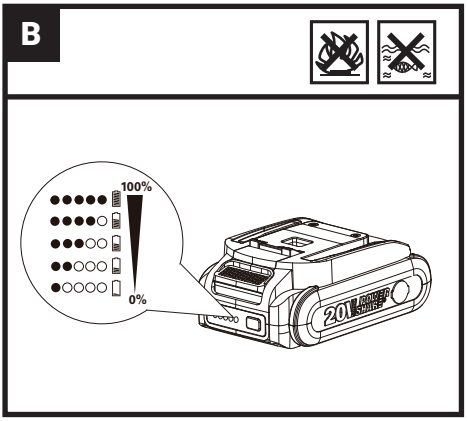

C

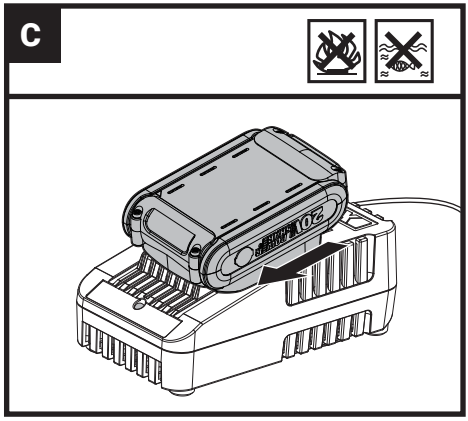

D

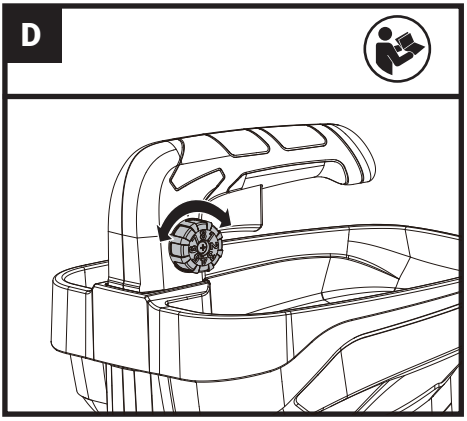

E1

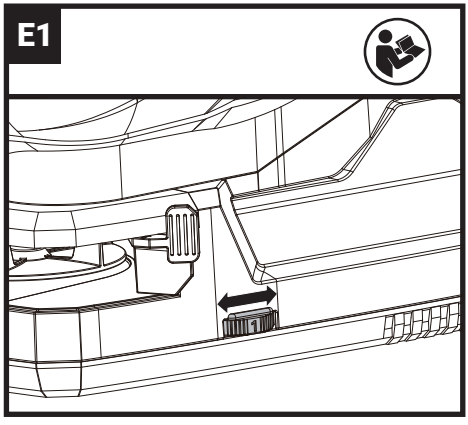

E2

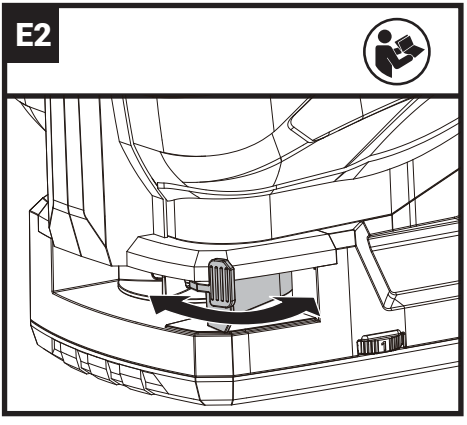

F

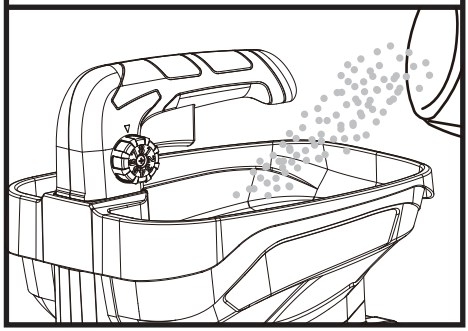

G1

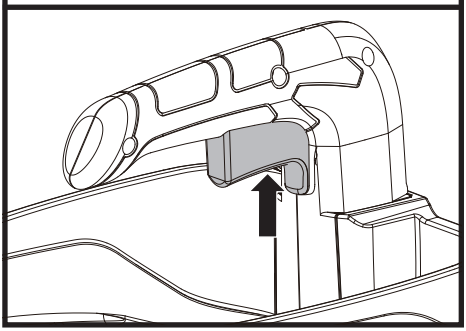

G2

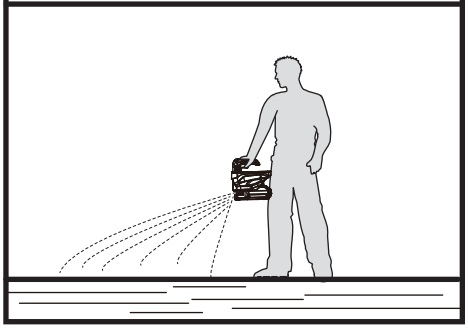

TABLE OF CONTENT

1. PRODUCT SAFETY
2. COMPONENT LIST
3. TECHNICAL DATA
4. INTENDED USE
5. ASSEMBLY & OPERATION
6. MAINTENANCE

1. PRODUCT SAFETY

⚠ WARNING: This product can expose you to chemicals including lead and Di(2-ethylhexyl) phthalate (DEHP) which are known to the State of California to cause cancer and birth defects or other reproductive harm. For more information go to www.P65Warnings.ca.gov.

READ ALL INSTRUCTIONS

⚠ WARNING: When using electric gardening products, basic safety precautions should always be followed to reduce the risk of fire, electric shock, and personal injury, including the following:

FOR ALL PRODUCTS

1) Avoid Dangerous Environment - Don't use products in damp or wet locations.
2) Don't Use In Rain.
3) Keep Children Away - All visitors should be kept at a distance from work area.
4) Dress Properly - Do not wear loose clothing or jewelry. They can be caught in moving parts. Use of rubber gloves and substantial footwear is recommended when working outdoors. Wear protective hair covering to contain long hair.
5) Use Safety Glasses - Always use face or dust mask if operation is dusty.
6) Use Right Product - Do not use product for any job except that for which it is intended.
7) Avoid Unintentional Starting - Don't carry plugged-in product with finger on switch. Be sure switch is off when plugging in.
8) Don't grasp the exposed cutting blades or cutting edges when picking up or holding the product.
9) Don't Force Product - It will do the job better and with less likelihood of a risk of injury at the rate for which it was designed.
10) Don't Overreach - Keep proper footing and balance at all times.
11) Stay Alert - Watch what you are doing. Use common sense. Do not operate product when you are tired.
12) Store Idle Products Indoors - When not in use, products should be stored indoors in dry, and high or locked-up place - out of reach of children.
13) Maintain Product With Care - Keep cutting edge sharp and clean for best performance and to reduce the risk of injury. Follow instructions for lubricating and changing accessories. Keep handles dry, clean, and free from oil and grease.
14) Check Damaged Parts - Before further use of the product, a guard or other part that is damaged should be carefully checked to determine that it will operate properly and perform its intended function. Check for alignment of moving parts, binding of moving parts, breakage of parts, mounting, and any other condition that may affect its operation. A guard or other part that is damaged should be properly repaired or replaced by an authorized service center unless indicated elsewhere in this manual.

Safety warnings for all battery operated gardening products

1. Prevent unintentional starting. Ensure the switch is in the off-position before connecting to battery pack, picking up or carrying the product. Carrying the product with your finger on the switch or energizing product that have the switch on invites accidents.
2. Disconnect the battery pack from the product before making any adjustments, changing accessories, or storing product. Such preventive safety measures reduce the risk of starting the product accidentally.
3. Recharge only with the charger specified by the manufacturer. A charger that is suitable for one type of battery pack may create a risk of fire when used with another battery pack.
4. Use products only with specifically designated battery packs. Use of any other battery packs may create a risk of injury and fire.
5. When battery pack is not in use, keep it away from other metal objects, like paper clips, coins, keys, nails, screws or other small metal objects, that can make a connection from one terminal to another. Shorting the battery terminals together may cause burns or a fire.
6. Under abusive conditions, liquid may be ejected from the battery; avoid contact. If contact accidentally occurs, flush with water. If liquid contacts eyes, additionally seek medical help. Liquid ejected from the battery may cause irritation or burns.
7. Do not use a battery pack or product that is damaged or modified. Damaged or modified batteries may exhibit unpredictable behavior resulting in fire, explosion or risk of injury.
8. Do not expose a battery pack or product to fire or excessive temperature. Exposure to fire or temperature above 130°C (266°F) may cause explosion.
9. Follow all charging instructions and do not charge the battery pack or product outside of the temperature range specified in the instructions. Charging improperly or at temperatures outside of the specified range may damage the battery and increase the risk of fire.
10. Have servicing performed by a qualified repair person using only identical replacement parts. This will ensure that the safety of the product is maintained.
11. Do not modify or attempt to repair the product or the

battery pack (as applicable) except as indicated in the instructions for use and care.

Additional safety warnings for Battery-operated Spreader

1. Treat your lawn with ease with this power spreader. Great for seed spreading, fertilizer, weed control and ice melting.
2. According to the actual area of the lawn, prepare an appropriate amount of grass seed according to the instructions for using the grass seed, and calculate and adjust the sowing speed and angle.
3. According to the actual area of the lawn and the instructions for using the fertilizer, prepare the right amount of fertilizer, calculate and adjust the spreading speed and angle.
4. Sow seeds at the appropriate season according to the grass seed instructions. Warm-season grasses are planted in the spring, and cool-season grasses are planted in the fall.
5. According to the growth condition of the lawn and the instructions for using fertilizer, choose the appropriate weather for fertilization. It is not suitable to fertilize before or after a strong storm. It is suitable to fertilize before light rain.
6. When the weather is hot, it is not advisable to fertilize at noon. Fertilization should be done in the morning and evening when the weather is relatively cooler.
7. After the snow stops in winter, when spreading snowmelt on sidewalks, driveways or in front of retail stores, you must wear suitable snow boots, walk carefully and slowly, and step firmly with every step to prevent slipping.
8. Do not use snow melting agents that are harmful to the environment. It is recommended to use sodium chloride, potassium chloride, calcium chloride, magnesium chloride, urea, amide-ethylene glycol mixture, calcium magnesium acetate, etc.
9. When spreading, do not operate towards to people, especially to people's faces. If fertilizer or snow melting agent gets into the eyes, wash the eyes immediately with flowing water. If serious, seek medical attention.

SAFETY WARNINGS FOR BATTERY PACK

a) Do not dismantle, open or shred cells or battery pack.
b) Do not expose battery pack to heat or fire. Avoid storage in direct sunlight.
c) Do not short-circuit a battery pack. Do not store battery packs haphazardly in a box or drawer where they may short-circuit each other or be short-circuited by conductive materials. When battery pack is not in use, keep it away from other metal objects, like paper clips, coins, keys, nails, screws or other small metal objects, that can make a connection from one terminal to another. Shorting the battery terminals together may cause burns or a fire.
d) Do not subject battery pack to mechanical shock.
e) In the event of battery leaking, do not allow the liquid to come into contact with the skin or eyes. If contact has been made, wash the affected area with copious amounts of water and seek medical advice.
f) Do not use any battery pack which is not designed for use with the equipment.
g) Keep battery pack out of the reach of children.
h) Always purchase the battery pack recommended by the device manufacturer for the equipment.
I) Keep battery pack clean and dry.
j) Wipe the battery pack terminals with a clean dry cloth if they become dirty.
k) Battery pack needs to be charged before use. Always use the correct charger and refer to the manufacturer's instructions or equipment manual for proper charging instructions.
l) Do not leave battery pack on prolonged charge when not in use.
m) After extended periods of storage, it may be necessary to charge and discharge the battery pack several times to obtain maximum performance.
n) Recharge only with the charger specified by Worx. Do not use any charger other than that specifically provided for use with the equipment.
o) Retain the original product literature for future reference.
p) Use only the battery pack in the application for which it was intended.
q) Remove the battery from the equipment when not in use.
r) Dispose of properly.
s) Do not mix cells of different manufacture, capacity, size or type within a device.
t) Keep the battery away from microwaves and high pressure.

SAVE THESE INSTRUCTIONS

SYMBOLS

	To reduce the risk of injury, user must read instruction manual
	WARNING
	Do not burn
	Batteries may enter water cycle if disposed improperly, which can be hazardous for ecosystem. Do not dispose of waste batteries as unsorted municipal waste.
 Li-Ion	Li-Ion battery, battery must be recycled
	call2recycle® POSITEC Inc. has established a partnership with the RBRC Corporation to recycle any Positec batteries with the RBRC-call2recycle seal. For environmental protection, please do not discard batteries in the trash. After the batteries' life cycle is ended, then please call 1-800-822-8837 for a free service that will properly dispose of the battery.

2. COMPONENT LIST

1.	**FLOW-RATE ADJUSTMENT**
2.	**HANDLE**
3.	**ON/OFF TRIGGER**
4.	**MATERIAL CONTENTS TUB**
5.	**SPEED-CONTROL DIAL**
6.	**EDGE-CONTROL DEFLECTOR**
7.	**SPREADER WHEEL**
8.	**BATTERY PACK RELEASE BUTTON***
9.	**BATTERY PACK***
10.	**BAFFLE**
11.	**AGITATOR**

*** Not all the accessories illustrated or described are included in standard delivery.**

3. TECHNICAL DATA

Type **WG869 WG869.X (3 - designation of machinery, representative of battery operated chain saw)**

	WG869 WG869.X **
Rated voltage	20 V ⎓ Max ***
Tub capacity	0.9 Gal.
Flow-rate adjustment levels	8
Spreading speed levels	6
Spreading speed	900-2200 (±10%) r/min
Battery pack type	Lithium-Ion
Machine weight (bare tool)	2.27 lbs (1.03 kg)

** X may be followed by one or two characters. All models are the same except model number and trademark. The suffix in models may be number from "1" to "999" or English letter "A" to "Z" or "M1" to" M9" which means different package or the various of accessories packed in the package.
*** Voltage measured without workload. Initial battery voltage reaches maximum of 20 volts. Nominal voltage is 18 volts.

SUGGESTED BATTERIES AND CHARGERS

Category	Type	Capacity
20V Battery	WA3669	2.0 Ah
20V Charger	WA3881	2.0 A

We recommend that you purchase your accessories from the same store that sold you the tool. Refer to the accessory packaging for further details. Store personnel can assist you and offer advice

4. INTENDED USE

The spreader is intended for spreading grass seeds, fertilizers, rock salt or de-icer outdoors.

5.ASSEMBLY & OPERATION

Action	Figure
BEFORE OPERATION	
Installing/Removing the Battery Pack	See Fig. A
Checking the battery charge condition **NOTE:** Fig. B only applies for the battery pack with battery indicator light.	See Fig. B
Charging the battery pack **NOTE:**The battery is shipped uncharged. The battery must be fully charged before the first use. More details can be found in charger's manual.	See Fig. C
Adjust the spreading quantity Recommended settings: Level 1 & 2: fine grass seeds Level 3 & 4: light fertilizer Level 5 & 6: heavy fertilizer Level 7 & 8: pearled fertilizer or de-icer	See Fig. D

Adjust spreading width Set the spreading width by using the speed-control dial and the edge-control deflector. **NOTE:** When the material diameter exceeds 4mm, it is advisable to adjust the spreading speed to a lower setting to prevent material crushing.	See Fig. E1, E2
Fill spreading material into the material contents tub. **NOTE:** Ensure that the ON/OFF trigger is switched off when filling the material contents tub.	See Fig. F
OPERATION	
Press and hold down the on/off trigger to start the machine. **NOTE:** Walk at a normal pace when spreading the material. Keep the material around the baffle sliding smoothly and press the trigger a few times if it gets stuck.	See Fig. G1, G2

6. MAINTENANCE

WARNING: Always remove battery pack or before adjusting, cleaning, servicing or transporting the machine.

1) CLEANING AND MAINTENANCE

1. Always take off battery pack when maintaining the product in order to refrain from the injury.
2. Do not put the fingers, sticks or other similar objects into the wheel in case of injury or product's damage.
3. Keep away from chemicals to prevent damage and personal injury.
4. Wipe clean with a dry cloth.

2) STORAGE

1. Store in a secure, dry place out of the reach of children.
2. Do not place other objects on the product.

FOR BATTERY TOOLS

The ambient temperature range for the use and storage of tool and battery is 32 °F-113 °F (0 °C-45 °C).

The recommended ambient temperature range for the charging system during charging is 32 °F-104 °F (0 °C-40 °C).