Owner's Manual

Installation and Operation

Models:

Outdoor Woodburning Fireplace
ODVILLA-36H-B
ODVILLA-36T-B
ODVILLA-42H-B
ODVILLA-42T-B

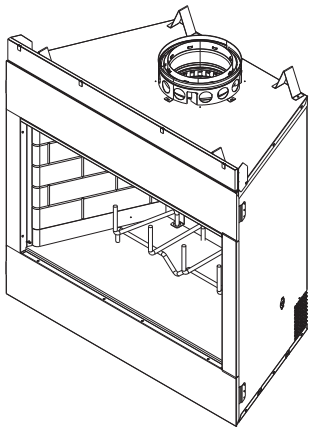

c UL us LISTED

DO NOT DISCARD

NOTICE

DO NOT DISCARD THIS MANUAL

- Important operating and maintenance instructions included.
- Read, understand and follow these instructions for safe installation and operation.
- Leave this manual with party responsible for use and operation.

⚠ WARNING

If the information in these instructions is not followed exactly, a fire may result causing property damage, personal injury, or death.

- Do not store or use gasoline or other flammable vapors and liquids in the vicinity of this or any other appliance.
- Do not overfire. Overfiring will void your warranty.
- Comply with all minimum clearances to combustibles as specified. Failure to comply may cause house fire.

Installation and service of this appliance should be performed by qualified personnel. Hearth & Home Technologies recommends HHT Factory Trained or NFI certified professionals.

hearthED FACTORY TRAINING Fuel Your Fire

NFI NATIONAL FIREPLACE INSTITUTE A CERTIFICATION AGENCY

⚠ WARNING

HOT SURFACES!

Screen/mesh, glass doors and other surfaces are hot during operation AND cool down.

Hot screen/mesh and glass doors will cause burns.

- **DO NOT** touch screen/mesh or glass doors until cooled
- NEVER allow children to touch screen/mesh or glass doors
- Keep children away
- CAREFULLY SUPERVISE children in same room as fireplace.
- Alert children and adults to hazards of high temperatures.

High temperatures may ignite clothing or other flammable materials.

- Keep clothing, furniture, draperies and other flammable materials away.

⚠ WARNING

Fire Risk

- For use with solid wood fuel or decorative gas appliance only.
- **DO NOT** install unvented gas logs.

Read this manual before installing or operating this fireplace.
Please retain this owner's manual for future reference.

Congratulations!

Congratulations on selecting a Outdoor Lifestyles wood burning fireplace. The Outdoor Lifestyles fireplace you have selected is designed to provide the utmost in safety, reliability and efficiency.

As the owner of a new fireplace, you'll want to read and carefully follow all of the instructions contained in this owner's manual. Pay special attention to all cautions and warnings.

This owner's manual should be retained for future reference. We suggest you keep it with your other important documents and product manuals.

The information contained in this owner's manual unless noted otherwise, applies to all models and gas control systems.

Your new Outdoor Lifestyles wood burning fireplace will give you years of durable use and trouble-free enjoyment. Welcome to the Outdoor Lifestyles family of fireplace products!

Homeowner Reference Information

We recommend that you record the following pertinent information about your fireplace:

Model Name: _____ Date purchased/installed: _____

Serial Number: _____ Location on fireplace: _____

Dealership purchased from: _____ Dealer phone: _____

Notes: _____

_____

_____

Listing Label Information/Location

The model information regarding your specific fireplace can be found on the rating plate located on the smoke shield of the fireplace.

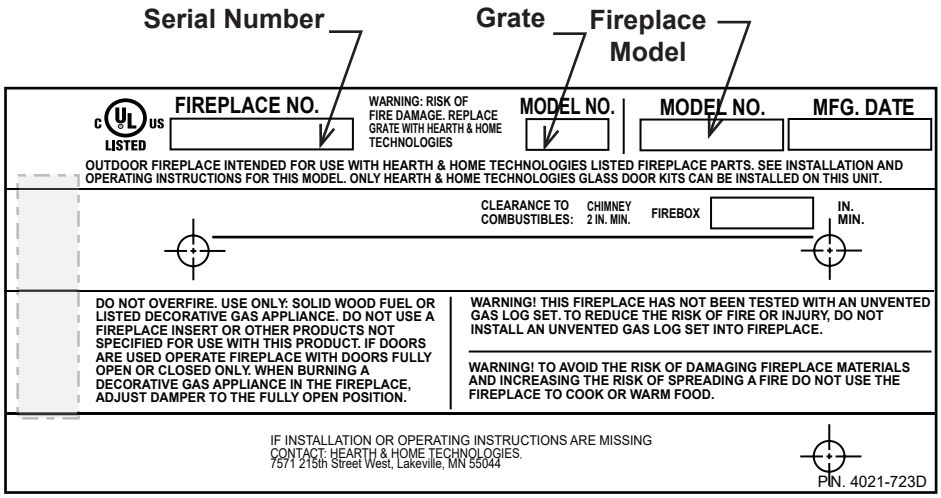

Note: An arrow (➔) found in the text signifies change in content.

⚠ Safety Alert Key:

- ***DANGER!*** Indicates a hazardous situation which, if not avoided will result in death or serious injury.
- ***WARNING!*** Indicates a hazardous situation which, if not avoided could result in death or serious injury.
- ***CAUTION!*** Indicates a hazardous situation which, if not avoided, could result in minor or moderate injury.
- ***NOTICE:*** Indicates practices which may cause damage to the fireplace or to property.

Table of Contents

Congratulations! 2
Warranty 4

1 Listing and Code Approvals 6
A. Appliance Certification 6
B. Non-Combustible Materials 6
C. Combustible Materials 6

User Guide

2 Operating Instructions 7
A. Your Fireplace 7
B. Seasoned Wood 8
C. Starting a Fire 8
D. Grate 8
E. Firescreen 8
F. Refractory 8
G. Glass Doors 9
H. Dual Cooling Air Kit (REQUIRED) 9
I. Vented Gas Log Sets & Gas Log Lighters 9
K. Clear Space 9
L. Wood Fuel 10

3 Maintenance and Service 11
A. Disposal of Ashes 11
B. Chimney Inspection/Cleaning 11
C. Check Firebox Refractory 12
D. Inspect Grate 12
E. Glass Cleaning 12

4 Troubleshooting Guide 13

5 Getting Started 14

Installer Guide

A. Typical Fireplace System 14
B. Design and Installation Considerations 15
C. Moisture Resistance: 15
D. Tools and Supplies Needed 15
E. Fireplace System Requirements 15
F. Inspect Fireplace and Components 15

6 Framing & Clearances 16
▶ A. Selecting Fireplace Location 16
B. Clearances 17
C. Sidewalls/Surrounds 18
D. Frame the Fireplace 18
▶ E. Chimney Requirements 19

7 Installation of Fireplace 20
A. Position the Fireplace 20
B. Place Protective Metal Hearth Strips 20
C. Level Fireplace 20
D. Install Cooling Air Hoods (PROVIDED) 21

8 Chimney Assembly 22
▶ A. Chimney Requirements 23
B. Using Offsets/Returns 24
C. Assemble Chimney Sections 25
D. Install Ceiling Firestops 25
E. Installing the Attic Insulation Shield 26
F. Cut out Hole in Roof 27
G. Complete Installation 27
H. Install Flashing 27
I. Chimney Termination Requirements 28

9 Chase Installations 29
A. Construct the Chase 29
B. Install Fireplace & Chimney 30
C. Install Chase Top 30
D. Install Termination Cap 31

10 Shrouds 33
A. Radiation Shield 33
B. Field Constructed Shrouds 33

11 Finishing 35
A. Non-Combustible Materials 35
B. Combustible Materials 35
C. Hearth Extension 35
D. Finishing Material 37
E. Combustible Mantel 39
F. Sidewalls/Surrounds 40

12 Accessories 41
A. Gas Log/Lighter Provision 41

13 Reference Materials 42
A. Appliance Dimensions/Weight 42
B. Optional Components 43
C. Chimney Components 44
D. Service Parts 47-50
E. Contact Information 51

Limited Warranty

Outdoor Lifestyles by Hearth & Home Technologies™
Limited Lifetime Warranty

Hearth & Home Technologies ("HHT") extends the following warranty for all Outdoor Lifestyles by HHT™ brand products ("Products") that are purchased from an HHT authorized dealer.

WARRANTY COVERAGE:

HHT warrants to the original owner of the Product at the site of installation, and to any transferee taking ownership of the Product at the site of installation within one year following the date of original purchase, that the Product will be free from defects in materials and workmanship at the time of manufacture. After installation, if covered components manufactured by HHT are found to be defective in materials or workmanship during the applicable warranty period, HHT will, at its option, repair or replace the covered components. This warranty is subject to conditions, exclusions and limitations as described below.

WARRANTY PERIOD:

The warranty period begins on the earlier of: (i) the date of invoice for the Product;
(ii) in the case of new home construction, the date of first occupancy of the residence or six months after the date of sale of the Product by an HHT authorized dealer, whichever occurs first; or (iii) the date 24 months following the date of Product shipment from HHT, regardless of the invoice or occupancy date.

WARRANTY CONDITIONS:

- The Limited Lifetime Warranty covers Products that are purchased through a HHT authorized dealer or distributor. A list of HHT authorized dealers is available on the HHT branded websites.
- This warranty is only valid while the Product remains at the site of original installation.
- Contact your installing dealer for warranty service. If the installing dealer is unable to provide necessary parts, contact the nearest HHT authorized dealer. Additional service fees may apply if you are seeking warranty service from a dealer other than the dealer from whom you originally purchased the Product.
- Check with your dealer in advance for any costs to you when arranging a warranty call. Travel and shipping charges for parts are not covered by this warranty.
- The Product body, metal firebox and heat exchanger carry the Limited Lifetime Warranty from the date of installation.
- The following components do not carry the Limited Lifetime Warranty but are warranted as follows:
  - One Year from Date of Installation:
    - Gas and Electrical Components or Gaskets
    - Nickel Plated Materials
      - Excludes tarnishing
    - Glass Breakage, Logs/Refractory/Glass Panels due to thermal breakage
      - Surface, hairline cracks, scratches and slight color changes are not covered
    - Venting, optional accessories, optional glass doors
    - Labor Associated with Warranty Service Work

WARRANTY EXCLUSIONS:

This warranty does not cover the following:

- Changes in surface finishes as a result of normal use. As a heating appliance, some changes in color of interior and exterior surface finishes may occur; this is not a flaw and not covered under warranty.
- Damage to printed, plated, or enameled surfaces caused by fingerprints, accidents, misuse, scratches, melted items, or other external sources and residues left on surfaces from the use of abrasive cleaners or polishes.
- Repair or replacement of parts that are subject to normal wear and tear during the warranty period. These parts include: paint, firebricks, grates, flame guides and the discoloration of glass.
- Minor expansion, contraction, or movement of certain parts causing noise. These conditions are normal and complaints related to this noise are not covered by this warranty.

Limited Warranty *(continued)*

- Damages resulting from: (1) failure to install, operate, or maintain the Product in accordance with the installation instructions, operating instructions, and listing agent identification label furnished with the Product; (2) failure to install the Product in accordance with local building codes; (3) shipping or improper handling; (4) improper operation, abuse, misuse, continued operation with damaged, corroded or failed components, accident, or incorrectly performed repairs; (5) inadequate ventilation, negative pressure or environmental conditions, including, without limitation: hail, snow, ice, fallen branches, flooding, water damage and fading of color; (6) use of fuels other than those specified in the operating instructions; (7) installation or use of components not supplied with the Product or any other components not expressly authorized and approved by HHT; (8) modification of the Product not expressly authorized and approved by HHT in writing; and/or (9) interruptions or fluctuations of electrical power supply to the Product.
- Non-HHT venting components, hearth components or other accessories used in conjunction with the Product.
- Any part of a pre-existing fireplace system in which an insert or a decorative gas appliance is installed.
- The Product's capability to heat the desired space. Information is provided to assist the consumer and the dealer in selecting the proper appliance for the application. Consideration must be given to the Product's location and configuration and environmental conditions.

This warranty is void if:

- The Product has been over-fired or operated in atmospheres contaminated by chlorine, fluorine, or other damaging chemicals. Over-firing can be identified by, but not limited to, warped plates or tubes, rust colored cast iron, bubbling, cracking and discoloration of steel or enamel finishes and cracking or spalling of refractory or cementitious materials.
- The Product is subjected to prolonged periods of dampness, condensation, ice or snow.
- There is any damage to the Product or other components due to water or weather damage which is the result of, but not limited to, improper chimney or venting installation.

LIMITATIONS OF LIABILITY:

Repair or replacement in accordance with the provisions of this warranty will be the owner's exclusive remedy for and will constitute HHT's sole obligation under this warranty, under any other warranty (express or implied), or in contract, tort or otherwise; provided, however, that if HHT is unable to provide repair or replacement in an expedient and cost effective manner, HHT may discharge all such obligations by refunding the purchase price of the Product. No employee, agent, dealer, or other person is authorized to give any warranty on behalf of HHT. TO THE EXTENT ALLOWED BY LAW, HHT MAKES NO OTHER WARRANTY, EXPRESS OR IMPLIED, INCLUDING ANY WARRANTY OF MERCHANTABILITY OR FITNESS FOR A PARTICULAR PURPOSE. HHT WILL NOT BE LIABLE FOR ANY CONSEQUENTIAL OR INCIDENTAL DAMAGES ARISING OUT OF DEFECTS IN OR USE OF THE PRODUCTS. Some states do not allow exclusions or limitation of incidental or consequential damages, so these limitations may not apply to you. This warranty gives you specific rights; you also may have other rights, which vary from state to state. The duration of any implied warranty is limited to the duration of the warranty period specified herein.

1 Listing and Code Approvals

A. Appliance Certification

This fireplace system has been tested and listed in accordance with **UL 127** and CAN/ULC-S610-M87 standards by Underwriters Laboratories Inc. for installation and operation in the United States and Canada.

This fireplace has been tested and listed for use with the optional components specified in this manual. These optional components may be purchased separately and installed at a later date.

Outdoor Lifestyles is a registered trademark of Hearth & Home Technologies Inc.

WARNING! Risk of Fire! *Hearth & Home Technologies disclaims any responsibility for, and the warranty and agency listing will be voided by the following actions.*

DO NOT:

- *install or operate damaged fireplace*
- *modify fireplace*
- *install other than as instructed by Hearth & Home Technologies*
- *operate the fireplace without fully assembling all components*
- *overfire*
- *install an unvented gas log set*
- *install any component not approved by Hearth & Home Technologies*
- *install parts or components not Listed or approved*

Improper installation, adjustment, alteration, service or maintenance can cause injury or property damage. For assistance or additional information, consult a qualified installer, service agency or your dealer.

NOTICE: *This fireplace is tested and approved as a decorative fireplace. It should not be factored as a primary heat source in residential heating calculations.*

B. Non-Combustible Materials

- Materials which will not ignite and burn, composed of any combination of the following:
  - Steel - Iron
  - Brick - Tile
  - Concrete - Slate
  - Glass - Plasters
- Materials reported as passing **ASTM E 136, Standard Test Method for Behavior of Metals, in a Vertical Tube Furnace at 750° C**

C. Combustible Materials

- Materials made of or surfaced with any of the following materials:
  - Wood - Compressed paper
  - Plant fibers - Plastic
- Any material that can ignite and burn; flame proofed or not, plastered or un-plastered

⚠ WARNING

Fire Risk

WARNING! TO AVOID THE RISK OF DAMAGING FIREPLACE MATERIALS AND INCREASING THE RISK OF SPREADING A FIRE, **DO NOT USE THE FIREPLACE TO COOK OR WARM FOOD.**

⚠ WARNING: This product and the fuels used to operate this product (wood and wood pellets), and the products of combustion of such fuels, can expose you to chemicals including carbon black, which is known to the State of California to cause cancer and carbon monoxide, which is known to the State of California to cause birth defects or other reproductive harm. For more information go to: www.P65Warnings.ca.gov.

User Guide

2 Operating Instructions

⚠ WARNING

HOT SURFACES!

Glass and other surfaces are hot during operation AND cool down.

Hot glass will cause burns.
- **DO NOT** touch glass until it is cooled
- NEVER allow children to touch glass
- Keep children away
- CAREFULLY SUPERVISE children in same room as fireplace.
- Alert children and adults to hazards of high temperatures.

High temperatures may ignite clothing or other flammable materials.
- Keep clothing, furniture, draperies and other flammable materials away.

If you expect that children may come into contact with this fireplace, we recommend a barrier such as a decorative screen. See your dealer for suggestions.

A. Your Fireplace

***WARNING! DO NOT** operate fireplace before reading and understanding operating instructions. Failure to operate fireplace according to operating instructions could cause fire or injury.*

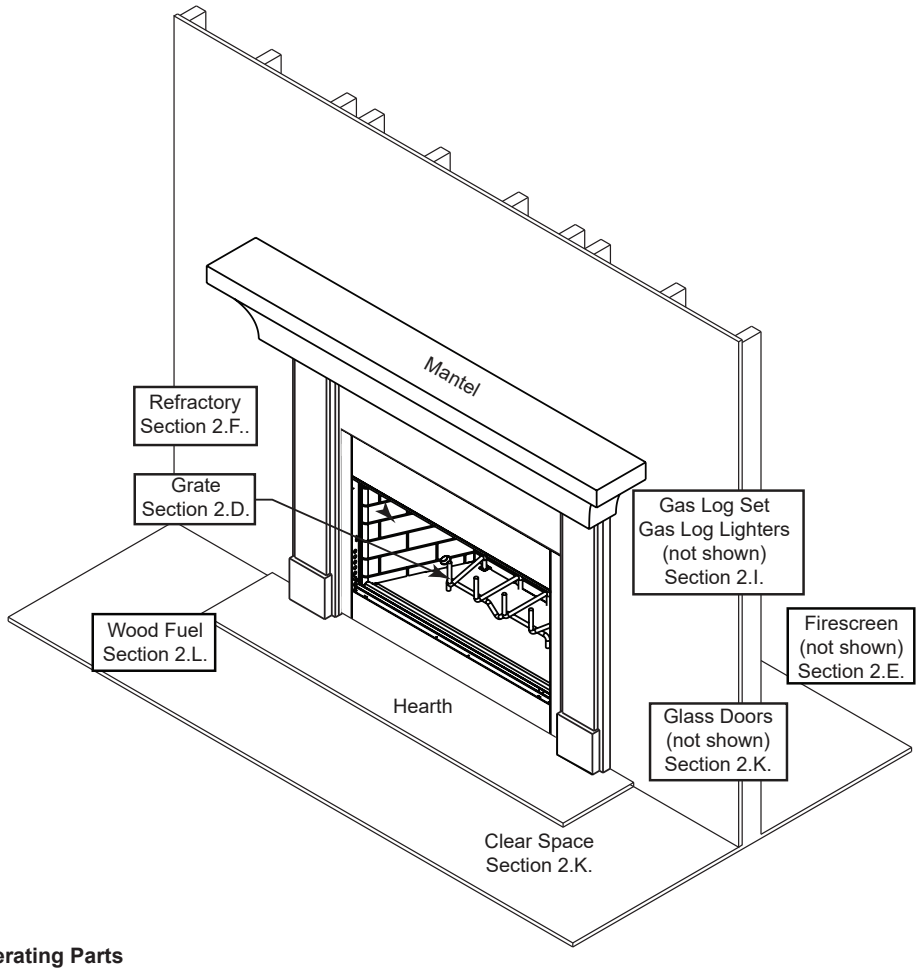

Figure 2.1 General Operating Parts

B. Seasoned Wood

Properly seasoned wood is important for successful operation of your fireplace. Most woodburning fireplace problems are caused by burning wet, unseasoned wood.

Seasoned firewood is wood that is cut to size, split and air dried to a moisture content of around 20%.

Imagine a wooden bucket that weighs about eight pounds. Fill it with a gallon of water, put it in the fireplace and try to burn it. This sounds ridiculous but that is exactly what you are doing if you burn unseasoned wood.

A tree cut down a year ago and not split is likely to have almost as high a moisture content now as it did when it was cut.

Please refer to Section 2.L for more detail.

C. Starting a Fire

NOTICE: *You must establish a good draft to prevent smoke spillage into the room.*

WARNING! Risk of Fire! *Keep combustible materials, gasoline and other flammable vapors and liquids clear of the fireplace.*

DO NOT:

- *store flammable materials close to the fireplace*
- *use gasoline, lantern fuel, kerosene, charcoal lighter fluid or similar liquids to start or "freshen up" a fire in this fireplace.*

Keep all flammable liquids well away from the fireplace while it is in use. Combustible materials may ignite.

- The first three or four fires should be of moderate size to allow the oils and binders to be burned from the fireplace and the refractory and paint to cure. You may notice an industrial odor the first few fires. This is considered normal.
- Use well-seasoned wood.
- Place crumpled or twisted paper under the fireplace grate.
- Loosely arrange kindling or small pieces of wood to form a 'tent' on the fireplace grate.
- Pre-warm the flue to establish a draft to help reduce smoke spillage during start-up. Hold a rolled up piece of burning newspaper under the flue for a few moments.
- Light the crumpled paper to ignite the kindling.
- Add small pieces of wood until a hot bed of embers has been established.
- Add a minimum of three average size pieces of split firewood, placed to allow combustion air and flames between them.

CAUTION! *Odors and vapors released during initial operation may be irritating to sensitive individuals.*

D. Grate

This fireplace is designed to be used with the grate supplied with this unit or one approved by HHT. The grate will break down over time and will need occasional replacement.

WARNING! Risk of Fire! *Use only the factory-supplied integral grate.*

- *Keeps logs in place.*
- *Allows proper air circulation around the fire.*

E. Firescreen

The firescreen is provided to control sparks. Keep it closed when the fireplace is in use.

WARNING! Risk of Fire or Burns!

- *Screen will not prevent burning materials from falling out.*
- *Screen pulls or handles may be hot.*

F. Refractory

- The refractory is supplied to contain heat and provide an attractive interior.
- It will break down over time and will need occasional replacement. Small hairline cracks and discoloration are normal and do not affect its safety.
- (See refractory maintenance Section 3.C.)

WARNING! Risk of Fire! DO NOT *burn fireplace without refractory. Use only refractory supplied by Hearth & Home Technologies, Inc.*

G. Glass Doors

- Glass doors are optional.
- Refer to Figure 2.2 for how to properly use them.

WARNING! Risk of Fire! *Install ONLY doors approved by Hearth & Home Technologies, Inc.*

WARNING! Risk of Fire and Smoke! *Fireplaces equipped with doors should be operated only with doors fully open or doors fully closed. If doors are left partly open, gas and flame may be drawn out of the fireplace opening.*

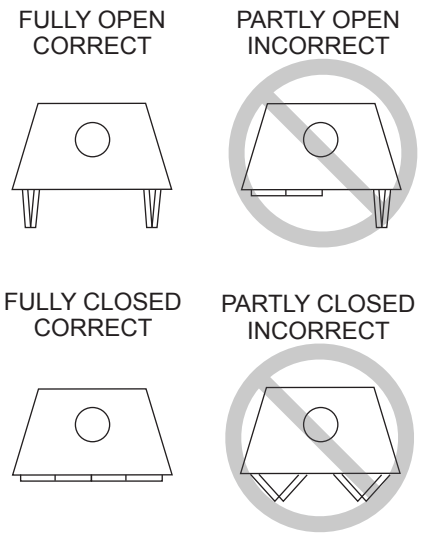

Figure 2.2 Operating Positions of Bi-fold Doors

H. Dual Cooling Air Kit (REQUIRED)

The cooling air kit is supplied as a standard feature with this fireplace and is required for safe operation. Installation must be done at the time of initial construction. The cooling air inlet tubes must be a minimum of 12 in.. (305 mm) above the base of the fireplace to prevent potential blockage by snow or yard debris. See page 14.

I. Vented Gas Log Sets & Gas Log Lighters

- Optional
- Vented gas logs or gas log lighters can be installed in this fireplace. Follow the instructions provided with the accessory for operation.

WARNING! Risk of Fire or Asphyxiation!

- ***DO NOT*** *install unvented gas logs.*
- *Gas flame may generate fumes.*

J. Optional Components

- Other options may be available
- Consult your dealer/distributor

WARNING! Risk of Fire! DO NOT *install and or use any component not approved by Hearth & Home Technologies Inc.*

K. Clear Space

- Do not place combustible objects within areas indicated in Figure 2.3.

WARNING! DO NOT *place combustible objects in front of the fireplace. High temperatures may ignite clothing, furniture or draperies.*

- Mantel - avoid placing candles and other heat-sensitive objects on mantel or hearth. Heat may damage these objects.

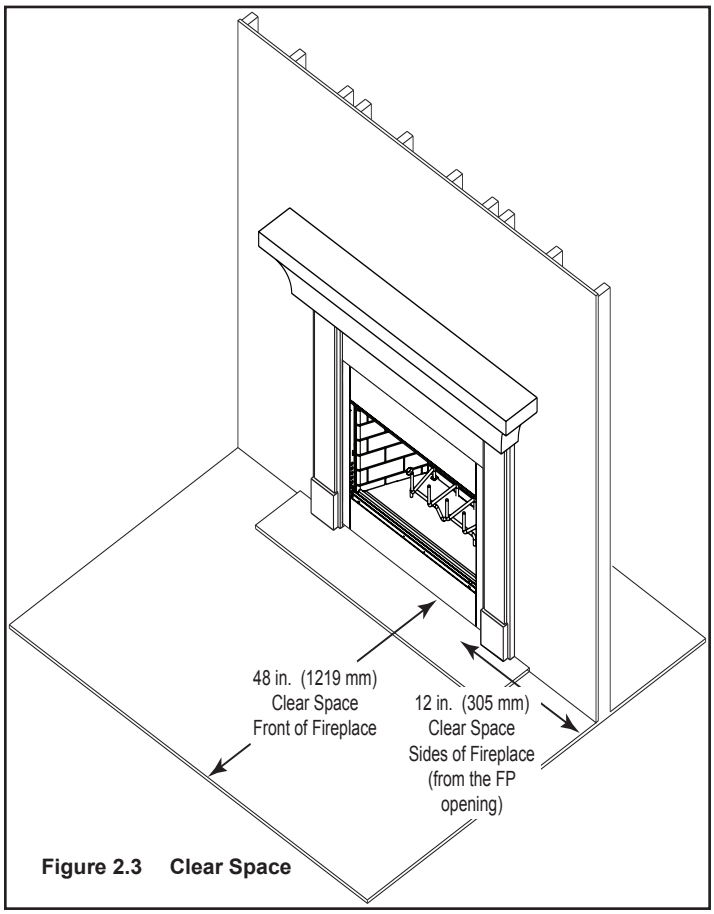

Figure 2.3 Clear Space

L. Wood Fuel

Hardwood vs Softwood

Your fireplace performance depends on the quality of the firewood you use.

- Seasoned wood contains about 8,000 BTUs per pound .
- Hard woods are more dense than soft woods.
- Hard woods contain 60% more BTUs than soft woods.
- Hard woods require more time to season, burn slower and are harder to ignite.
- Soft woods require less time to dry, burn faster and are easier to ignite.
- Start the fire with soft wood to bring the fireplace up to operating temperature and to establish draft.
- Add hard wood for slow, even heat and longer burn time.

Soft woods	Hard woods
• Douglas Fir	• Oak
• Pine	• Maple
• Spruce	• Apple
• Cedar	• Birch
• Poplar	
• Aspen	
• Alder	

Moisture

WARNING! Risk of Fire!

- ***DO NOT*** *burn wet or green wood.*
- *Wet, unseasoned wood can cause accumulation of creosote.*

The majority of the problems fireplace owners experience are caused by trying to burn wet, unseasoned wood.

- Wet, unseasoned wood requires energy to evaporate the water instead of heating your home, and
- Evaporating moisture cools your chimney, accelerating formation of creosote.

Seasoned Wood

- Cut logs to size
- Split to 6 in. (152 mm) or less
- Air dry to a moisture content of around 20%
  - Soft wood - about nine months
  - Hard wood - about eighteen months

NOTICE: *Seasoning time may vary depending on drying conditions.*

Storing Wood

Steps to ensure properly seasoned wood:

- Stack wood to allow air to circulate freely around and through woodpile.
- Elevate wood pile off ground to allow air circulation underneath.
- Smaller pieces of wood dry faster. Any piece over 6 in. (152 mm) in diameter should be split.
- Wood (whole or split) should be stacked so both ends of each peice are exposed to air. More drying occurs through the cut ends than the sides.
- Store wood under cover to prevent water absorption from rain or snow. Avoid covering the sides and ends completely.

WARNING! Fire Risk! DO NOT *store wood:*

- *In front of the fireplace.*
- *In space required for loading or ash removal.*

Processed Solid Fuel Firelogs

Manufactured firelogs may be used with this fireplace. Hearth & Home Technologies Inc. recommends the use of UL Classified processed fuel firelogs. Follow the manufacturer's lighting and safety instructions.

Using firelogs may require more frequent chimney inspection and cleaning.

Do not poke or stir the logs while they are burning. Use only firelogs that have been evaluated for the application in manufactured fireplaces and refer to fire log warnings and caution markings on packaging prior to use.

3 Maintenance and Service

A. Disposal of Ashes

Frequency: When they reach bottom of grate
By: Homeowner

WARNING! Risk of Fire! *Ashes could contain hot embers.*

- Place ashes in a metal container with a tight-fitting lid.
- The closed container should be placed on a non-combustible floor or on the ground, well away from all combustible materials, pending final disposal.
- If the ashes are disposed of by burial in soil or otherwise locally dispersed, they should be retained in the closed container until all cinders have thoroughly cooled.

B. Chimney Inspection/Cleaning

Frequency: At least twice a year during heating season or as recommended by a certified chimney sweep
By: Certified chimney sweep

WARNING! Risk of Fire! *Ignited creosote is extremely HOT. Prevent creosote buildup.*

Refer to Figure 3.1 to remove/reinstall termination caps.

Creosote - Formation and Need for Removal

When wood is burned slowly, it produces tar and other organic vapors, which combine with expelled moisture to form creosote. The creosote vapors condense in the relatively cool chimney flue of a slow-burning fire. As a result, creosote residue accumulates on the flue lining. When ignited this creosote makes an extremely hot fire.

WARNING! Risk of Fire! *A chimney fire can permanently damage your chimney system and nearby structures.*

In the event of a chimney fire, Hearth & Home Technologies Inc. recommends:

- replacement of the chimney, and
- inspection of the adjacent structure to the provisions of NFPA Level III inspection criteria.

The chimney shall be inspected at least twice a year during the heating season to determine when a creosote buildup has occurred.

When creosote has accumulated it shall be removed to reduce the risk of a chimney fire.

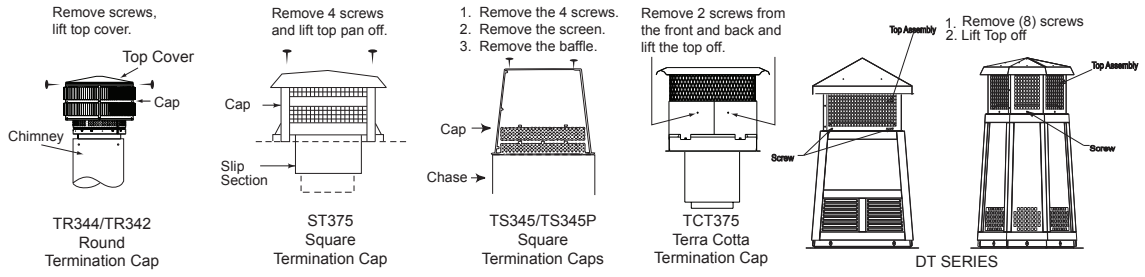

Figure 3.1 Chimney & Termination Cap Cleaning

C. Check Firebox Refractory

Frequency: After each ash removal
By: Homeowner

WARNING! Risk of Fire! *Inspect fireplace refractory. Crumbling, deteriorated refractory can allow overheating of surrounding materials.*

Expansion and contraction will cause minor cracking of the refractory. This is normal. The refractory will require periodic replacement depending on use.

The panels should be replaced if

- Cracks exceed ¼ inch (6 mm) in width,
- Metal is exposed behind the refractory,
- Large pieces of refractory fall out.

D. Inspect Grate

Frequency: After each ash removal
By: Homeowner

Inspect grate for:

- Warping or sagging 1-1/2 in. (38 mm) or more
- Broken welds
- Burn-through of grate bars

For safe operation, replace only with an approved grate from Hearth & Homes Technologies Inc.

E. Glass Cleaning

Frequency: As desired
By: Homeowner

CAUTION! *Handle glass assembly with care. Glass is breakable.*

- *Avoid striking, scratching or slamming glass*
- *Avoid abrasive cleaners*
- ***DO NOT*** *clean glass while it is hot*

Clean glass with a non-abrasive commercially available cleaner or ashes:

- Light deposits
  - Use household glass cleaner
- Heavy deposits
  - Use wood ash on damp cloth or,
  - Use commercial fireplace glass cleaner (consult with your dealer)

4 Troubleshooting Guide

Start Fire Problems	Possible Cause	Solution
Can't get fire started Excessive smoke or spillage Burns too slowly Smolders, sizzles	Not enough kindling/paper or no kindling/paper	Use dry kindling, more paper. Arrange kindling & wood for air movement.
	Not enough air for fire to ignite	Check for restricted cap/shroud.
		Check for flue blockage.
		Pre-warm flue before starting fire
		Check for adequate vent height (refer to chimney assembly section).
	Wood condition is too wet, too large	Use dry, seasoned wood
	Bed of coals not established before adding wood	Start with paper & kindling to establish bed of coals (refer to starting fire section).
	Flue blockage such as birds' nests or leaves in termination cap	Have chimney inspected for creosote and cleaned by a certified chimney sweep.
Fire burns too fast	Extremely dry or soft wood	Mix in hardwood.
		Mix in less seasoned wood after fire is established (refer to wood fuel section).
	No glass doors	Add glass doors to slow down air flow.
	Overdrafting	Check for correct vent height; too much vertical height creates overdrafting.
		Check location of vent termination (refer to chimney assembly section).

A. Typical Fireplace System

NOTICE:
- *Illustrations and photos reflect typical installations and are for design purposes only.*
- *Illustrations/diagrams are not drawn to scale.*
- *Actual product may vary from pictures in manual.*

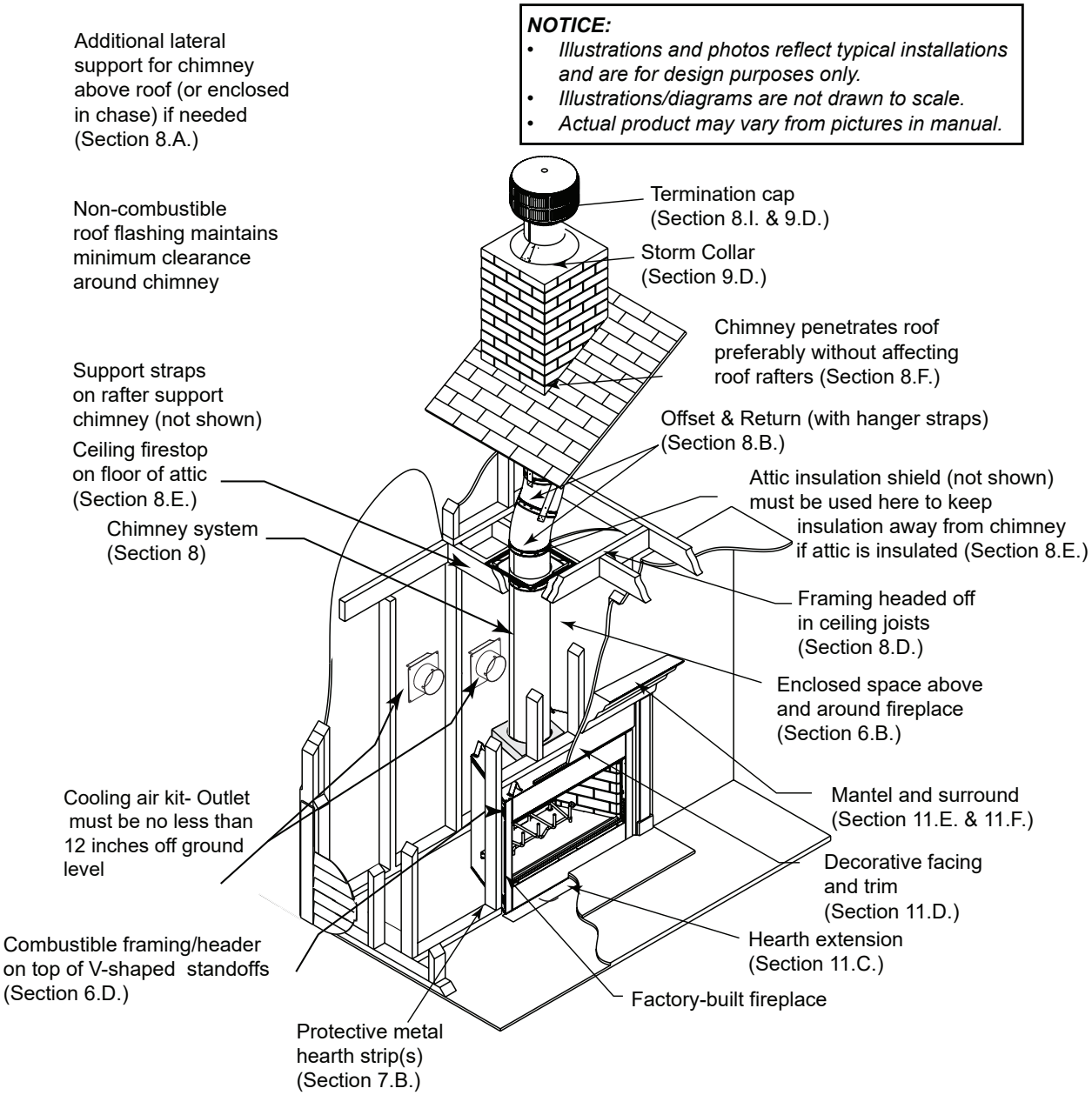

B. Design and Installation Considerations

NOTICE: *Check building codes prior to installation.*

- Installation MUST comply with local, regional, state and national codes and regulations.
- Consult insurance carrier, local building inspector, fire officials or authorities having jurisdiction over restrictions, installation inspection and permits.

Before installing, determine the following:

- Where the fireplace is to be installed
- The vent system configuration to be used
- Gas supply piping
- Framing and finishing details
- Whether optional accessories are desired

C. Moisture Resistance:

This outdoor fireplace will shed moderate amounts of water, but is not waterproof. Water and condensing water vapor may enter the chase under certain conditions.

The fireplace will not perform as an exterior wall. Moisture penetration must be considered for construction that places the fireplace in structure walls or on moisture sensitive surfaces.

When installed on exterior walls: Hearth & Home Technologies recommends that the fireplace chase be constructed outside the structure's weather envelope. Where the platform meets the wall, use a flashing detail similar to that required for attached decks. Chase platforms, including hearths should slope away from the structure at 1/8 in. to 1/4 in. per foot. The fireplace can be shimmed level.

When installed on surfaces where water may collect or cause damage: Hearth & Home Technologies recommends that a drainage pan (sold separately), be placed under the unit. This can be constructed of metal, adhesive polymer membrane (such as ice and water shield) or other suitable materials. A means of drainage out of the pan such as tubes or weep holes should be provided. A slope of 1/8 in. to 1/4 in. per foot towards the drain port is suggested. The fireplace can be shimmed level.

Hearths should slope away from the front of the fireplace and chase at 1/8 in. to 1/4 in. per foot. Spark strips must be on top of any combustible hearth materials used for moisture management.

D. Tools and Supplies Needed

Before beginning the installation be sure the following tools and building supplies are available:

Reciprocating saw	Framing material
Pliers	Non-combustible sealant
Hammer	Gloves
Phillips screwdriver	Framing square
Flat blade screwdriver	Electric drill and bits
Plumb line	Safety glasses
Level	Tape measure

1/2-3/4 in. length, #6 or #8 self-drilling screws

Misc. screws and nails

E. Fireplace System Requirements

This fireplace system requires:

- Fireplace
- Hearth Refractory
- Grate Assembly
- Hearth Extension (required, sold separately)
- Chimney System (required, sold separately)
- Termination Cap (required, sold separately)
- Drain Pan (recommended on wood surfaces, sold separately)

F. Inspect Fireplace and Components

WARNING! Risk of Fire and/or Explosion! *Damaged parts could impair safe operation.* ***DO NOT*** *install damaged, incomplete or substitute components. Keep fireplace dry.*

- Remove fireplace and components from packaging and inspect for damage.
- Vent system components and doors are shipped in separate packages.
- Report to your dealer any parts damaged in shipment.
- **Read all the instructions before starting the installation. Follow these instructions carefully during the installation to ensure maximum safety and benefit.**

6 Framing & Clearances

A. Selecting Fireplace Location

This outdoor fireplace will shed moderate amounts of water, but is not waterproof. Water and condensing water vapor may enter the chase under certain conditions.

The fireplace will not perform as an exterior wall. Moisture penetration must be considered for construction that places the fireplace against structure walls or on moisture sensitive surfaces.

- **Exterior Walls (see Figure 6.1)**
  Hearth & Home Technologies recommends that the fireplace chase be constructed outside the structure's weather envelope. Where the platform meets the wall, use a flashing detail similar to that required for attached decks. Chase platforms, including hearths, should slope away from the structure at 1/8 in. to 1/4 in. per foot. The fireplace can be shimmed level. Build the outside enclosure out of standard building materials, being careful to maintain the minimum air clearances specified in these installation instructions.

THERE IS NOT A FLUE DAMPER,THEREFORE UNIT CANNOT BE INSTALLED INDOORS.

- **Freestanding Installations (see Figure 6.2)**
  When installing this fireplace as a freestanding fireplace on your porch, patio or in your yard, it must be enclosed to prevent impact damage to the fireplace.

- **The cooling air hoods MUST be used if installing in a combustible enclosure.**

- If unit is installed on cement and totally enclosed with non combustible materials (i.e. metal studs, cement board, etc.) the cooling air hoods do not need to be installed.

- **When Installed on Surfaces Where Water May Collect or Cause Damage:**
  Hearth & Home Technologies recommends that a drainage pan be placed under the unit, (sold separately). This can be constructed of metal, adhesive polymer membrane (such as ice and water shield) or other suitable materials. A means of drainage out of the pan such as tubes or weep holes should be provided. A slope of 1/8 in. to 1/4 in. per foot towards the drain port is suggested. The fireplace can be shimmed level. Hearths should slope away from the front of the fireplace and chase at 1/8 in. to 1/4 in. per foot. Spark strips must be used on top of any combustible hearth materials used for moisture management.

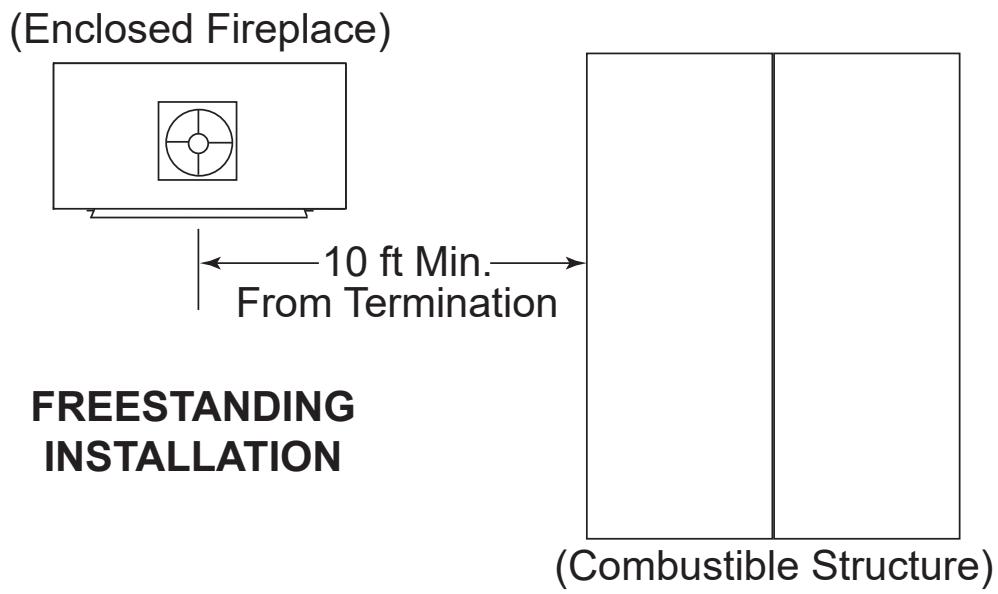

Figure 6.1 Freestanding Installation

B. Clearances

WARNING! Risk of Fire! *You must comply with all minimum air space clearances to combustibles as specified in Figure 6.2.* ***DO NOT*** *pack required air spaces with insulation or other materials.*

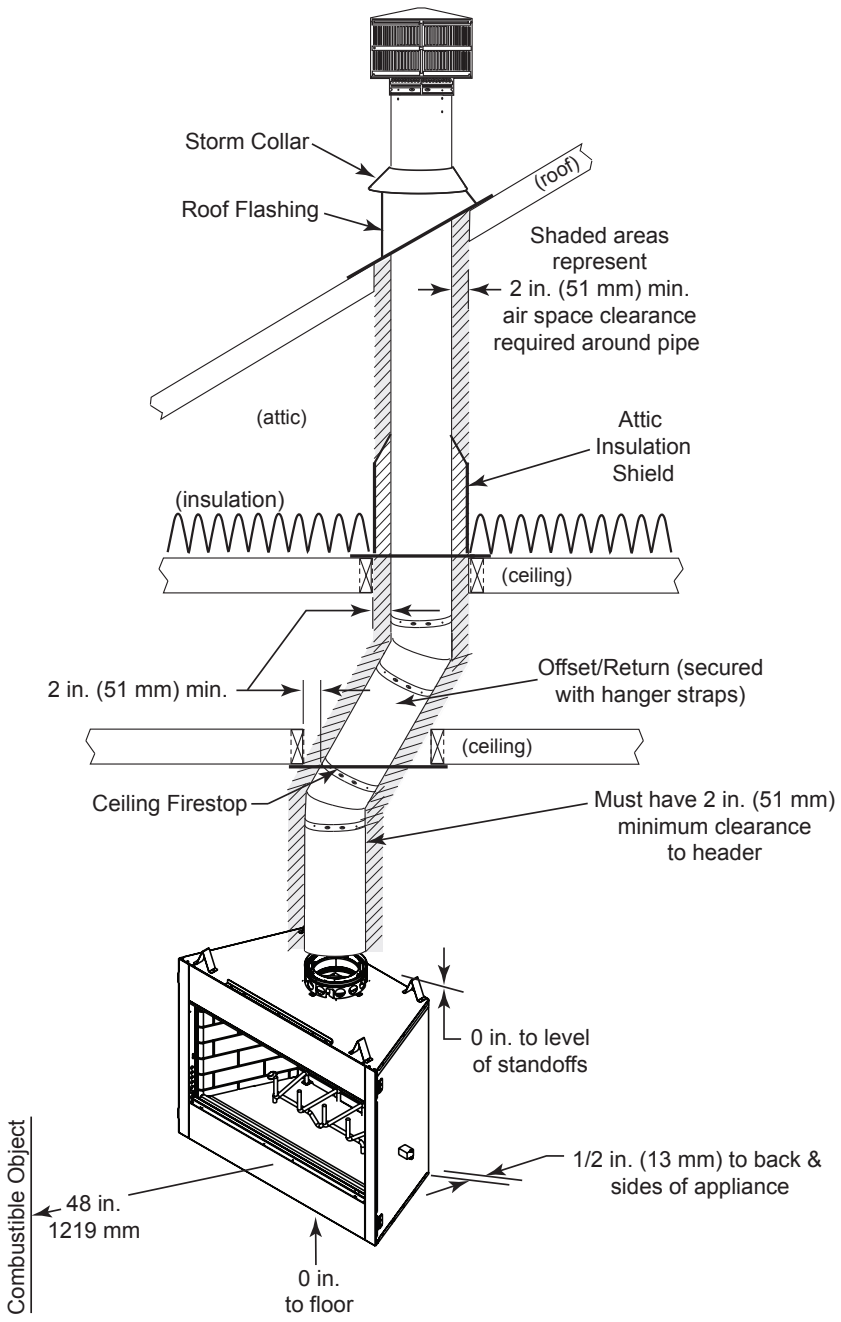

Figure 6.2 Clearances to Combustible Materials

C. Sidewalls/Surrounds

- Adjacent combustible sidewalls must be located a minimum of 12 in. (305 mm) from the fireplace opening.
- Combustible and non-combustible mantel legs, surrounds and stub walls may be constructed within the gridded area, Figure 6.3.

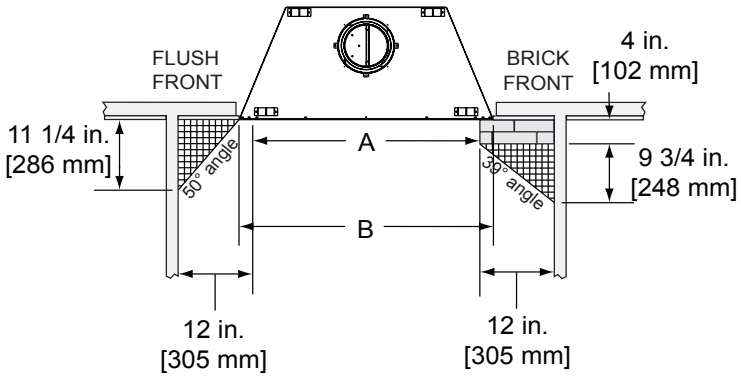

Model	A Fireplace opening	B Outside Dimensions
ODVILLA-36	36 in.	41 in.
	914 mm	1041 mm
ODVILLA-42	42 in.	47 in.
	1067 mm	1194 mm

Figure 6.3 Mantel Leg or Wall Projections (Acceptable on both sides of opening)

D. Frame the Fireplace

Figure 6.4 shows typical framing using combustible materials (2x4 lumber shown).

- Observe all required air space clearances to combustible materials as shown in Figure 6.1 & 6.2.
- Framing across the top of fireplace must be above top standoffs.

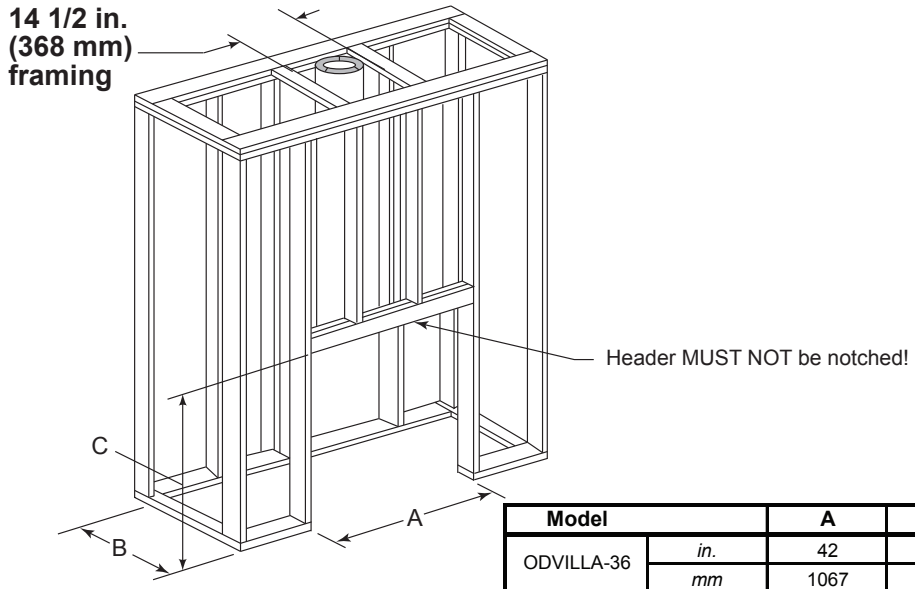

Model		A	B*	C**
ODVILLA-36	*in.*	42	21 1/2	39 3/4
	mm	1067	546	1010
ODVILLA-42	*in.*	48	21 1/2	39 3/4
	mm	1219	546	1010

* If interior of chase will be drywalled, add the thickness to this measurement.

** Adjust header height for a raised floor under fireplace.

Figure 6.4 Framing the Fireplace

E. Chimney Requirements

When planning your fireplace location, the chimney construction and necessary clearances must be considered. The fireplace system and chimney components have been tested to provide flexibility in construction. The following figures are the minimum distances from the base of the fireplace.

- Minimum overall straight height is 6 ft 4 in. If the fireplace is freestanding and a minimum of 10 ft from a combustible structure. See Figure 6.1
- Chimney must extend 2 ft (.6 m) above any portion of the roof within 10 ft (3 m) of the chimney. Refer to Figure 8.7

		ft	m
•	Minimum height with offset/return	14.5	4.42
•	Maximum height	90	27.43
•	Maximum chimney length between an offset and return	20	6.1
•	Maximum distance between chimney stabilizers	35	10.67
► •	Double offset/return minimum height	20	6.1
•	Maximum unsupported chimney length between the offset and return	6	1.83
•	Maximum unsupported chimney height above the fireplace	35	10.67
•	Minimum overall straight height if fireplace is freestanding	6.4	1.95
•	Minimum Straight Height	14.5	4.42

Note: A maximum of two pairs of offsets and returns may be used.

The CAK4A is required for use in Canada

NOTE: Before framing up the chase, consider where and how the chimney will run. If there are obstacles that might be in the way, it may be necessary to make the chase larger than shown to allow for offsets to be used. Refer to offset chart above.

7 Installation of Fireplace

CAUTION! Risk of Cuts/Abrasions. *Wear protective gloves and safety glasses during installation. Sheet metal edges are sharp.*

A. Position the Fireplace

- This fireplace may be placed on either a combustible or noncombustible continuous flat surface.
- Follow framing instructions in Section 6.

  WARNING! Risk of Fire! *Prevent contact with sagging, loose insulation.*
  - ***DO NOT*** *install against vapor barriers or exposed insulation.*
  - *Secure insulation and vapor barriers.*
  - *Provide minimum air space clearances at the sides and back of the fireplace assembly as outlined in Section 6.*

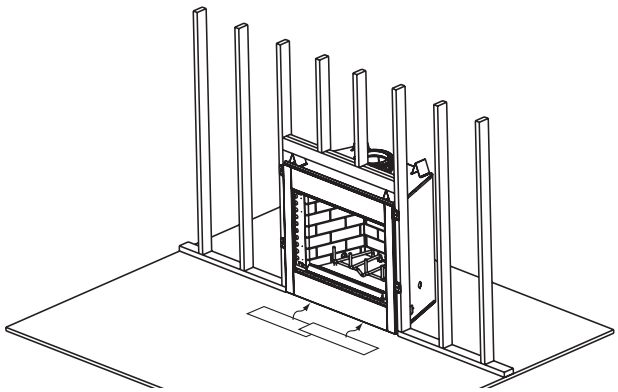

Protective metal strips are placed 2 in. (51 mm) under the front of the fireplace and must extend beyond the front and sides of fireplace opening by 2 in. (51 mm)

Figure 7.1 Position the Protective Metal Hearth Strips

B. Place Protective Metal Hearth Strips

WARNING! Risk of Fire! *Protective metal hearth strips MUST be installed.* ***DO NOT*** *cover metal strips with combustible materials. Sparks or embers may ignite flooring.*

- Refer to Figures 7.1 and 7.2.
- Locate the two protective metal hearth strips measuring approximately 26 in. x 4 in. (660 mm x 102 mm) included with this fireplace.
- Slide each metal strip 2 in. (51 mm) under front edge of fireplace.
- Overlap strips in the middle of fireplace opening by 1 in. (25 mm) minimum.
- Metal strips must extend beyond the front and sides of the fireplace opening by at least 2 in. (51 mm).
- Protect the front of a platform elevated above the hearth extension with metal strips (not included with fireplace) per Figure 7.2. See Section 11 for hearth extension instructions.

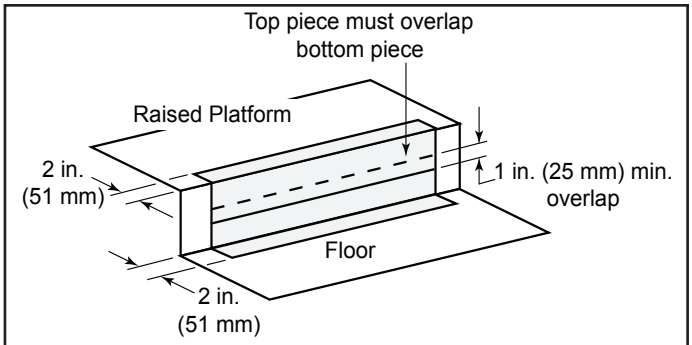

Figure 7.2 Protect the Front of an Elevated Platform

C. Level Fireplace

- Level fireplace side-to-side and front-to-back.
- Shim with non-combustible material as necessary.
- Secure fireplace to framing with nailing flanges with a minimum of two fasteners per nailing flange.
- Check fireplace opening for square to ensure proper fit of glass doors. Measure diagonals of fireplace opening to make sure they are equal.

D. Install Cooling Air Hoods (PROVIDED)

WARNING! Cooling air must be provided when installing in combustible enclosure or on combustible surface.

- Locate cooling air hoods to prevent blockage from leaves, snow/ice, or other debris. Blockages could cause the unit to overheat.
- The lowest point of the cooling air hoods to be located a minimum of 12” above the bottom of unit.
- Do Not place cooling air hood close to exhaust vent.
- Cut a 4 in. hole in the enclosure for the hood.
- The outside air hood can be painted to match/accent the color of the structure.
- An air grille can be used in place of the plastic hoods (Provided); Grill **MUST** have a minimum of 25 sq/ in opening to allow for proper cooling air flow to unit. Lowest edge of grille to be located a minimum of 12” above the bottom of the unit

Caution! **Risk of Fire or Asphyxiation**! Do not draw outside air from wall, floor, or ceiling cavity, or enclosed spaces such as an attic or garage.

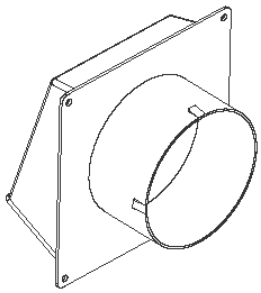

Figure 7.3 Cooling Air Hood

8 Chimney Assembly

NOTICE: *Chimney performance may vary.*

- *Trees, buildings, roof lines and wind conditions affect performance.*
- *Chimney height may need adjustment if smoking or overdraft occurs.*

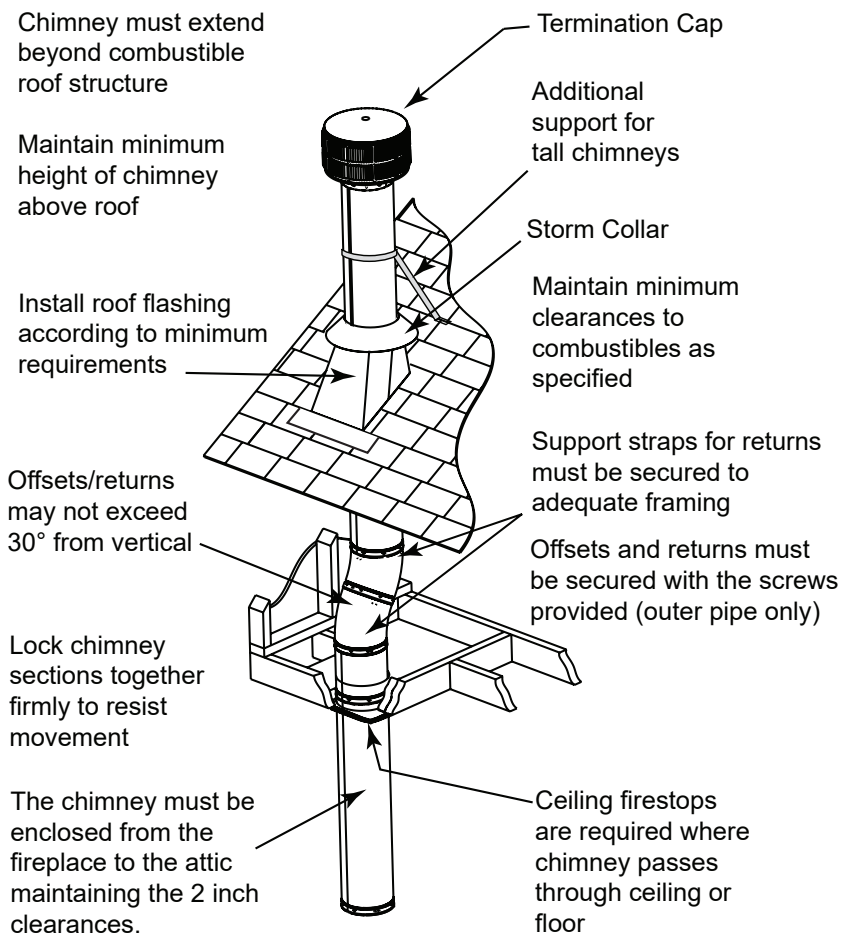

Figure 8.1 Typical Chimney System - Guidelines for Chimney System Installation

A. Chimney Requirements

When planning your fireplace location, the chimney construction and necessary clearances must be considered. The fireplace system and chimney components have been tested to provide flexibility in construction. The following figures are the minimum distances from the base of the fireplace.

- Minimum overall straight height is 6 ft 4 in. if the fireplace is freestanding and a minimum of 10 ft from a combustible structure. See Figure 3.2.
- Chimney must extend 2 ft (.6 m) above any portion of the roof within 10 ft (3 m) of the chimney. Refer to Figure 6.1.

		ft	m
•	Minimum height with offset/return	14.5	4.42
•	Maximum height	90	27.43
•	Maximum chimney length between an offset and return	20	6.1
•	Maximum distance between chimney stabilizers	35	10.67
▶ •	Double offset/return minimum height	20	6.1
•	Maximum unsupported chimney length between the offset and return	6	1.83
•	Maximum unsupported chimney height above the fireplace	35	10.67
•	Minimum overall straight height if fireplace is freestanding	6.4	1.95
•	Minimum Straight Height	14.5	4.42

Determine the chimney components needed to complete your particular installation:

- Measure the total vertical height of the fireplace installation from the base of the fireplace assembly to the approximate location of the bottom of the termination cap.
- Subtract the effective height of the fireplace assembly (see Figure 8.2) from the total vertical height to determine the overall height of the chimney installation.
- Create a schematic for your application similar to Figure 8.2 showing components required (referring to Table 8.1). Figure 8.1 identifies those components and where used.
- Install a ceiling firestop whenever the chimney penetrates a floor/ceiling.

NOTICE: *A maximum of two pairs of offsets and returns may be used.*

CAUTION! Risk of Fire and/or Asphyxiation! DO NOT *connect this fireplace to a chimney flue servicing another appliance.* ***DO NOT*** *connect to any air distribution duct or system. These actions could cause overheating/fire in the chimney flue, or release of exhaust fumes into the living areas.*

Table 8.1

HEIGHT OF CHIMNEY COMPONENTS		*in.*	*mm*
Chimney Stabilizer			
	SL3	4-3/4	121
Ceiling Firestops			
	FS338	0	0
	FS339	0	0
	FS340	0	0
Offsets/Returns			
	SL315	13-3/8	340
	SL330	15-1/2	394
Roof Flashing			
	RF370	0	0
	RF371	0	0
Chimney Sections*			
	SL306	4-3/4	121
	SL312	10-3/4	273
	SL318	16-3/4	425
	SL324	22-3/4	578
	SL336	34-3/4	883
	SL348	46-3/4	1187

*** Dimensions reflect effective height.**

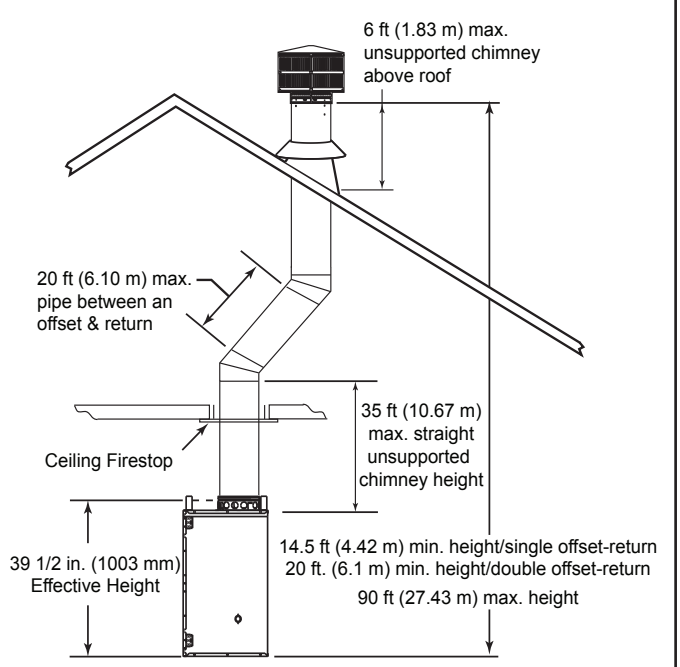

Figure 8.2 Chimney Requirements

B. Using Offsets/Returns

- Use an offset/return to bypass overhead obstructions.
- An offset and return can be used as a single entity or separated by chimney section(s).

  ***WARNING! Risk of Fire! DO NOT** use offset/returns greater than 30°. Chimney draft will be restricted and could cause overheating and fire.*

- Measure the shift needed to avoid the overhead obstruction. Refer to dimension A in Figure 8.3.
- Find the appropriate A dimension listed in Table 8.2.
- The B dimension coinciding with the A dimension measurement in Table 8.2 represents the required vertical clearance needed to complete the offset/return.
- Read across the chart to find the number of chimney sections/model numbers needed between the offset and return.

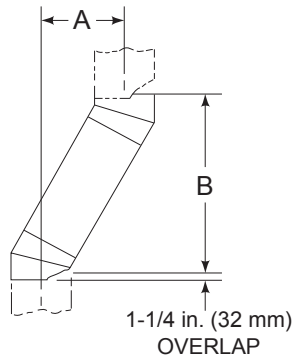

Figure 8.3 Chimney Offset/Return

Example:

Your "A" dimension from Figure 8.3 is 14 1/2 in. (368 mm). Using Table 8.2 the dimension closest to, but not less than 14 1/2 in. (368 mm) is 14 1/2 in. (368 mm) using a 30° offset/return.

You determine from the table that you need 34 1/8 in. (867 mm) (Dimension "B") between the offset and return.

The chimney component that best fits your application is one SL324.

Table 8.2

15-degree										30-degree			
A Offset		B Height								A Offset		B Height	
in.	*mm*	*in.*	*mm*	SL306	SL312	SL318	SL324	SL336	SL348	*in.*	*mm*	*in.*	*mm*
1-5/8	41	13-3/8	340	-	-	-	-	-	-	3-5/8	92	15-1/2	394
2-7/8	73	17-3/4	451	1	-	-	-	-	-	5-1/2	140	18-5/8	473
4-1/8	102	22-3/8	568	2	-	-	-	-	-	7-1/4	184	21-3/4	552
4-1/2	114	23-5/8	600	-	1	-	-	-	-	8-1/2	216	23-3/4	603
5-3/4	146	28-1/4	718	1	1	-	-	-	-	10-1/4	260	27	686
6	152	29-3/8	746	-	-	1	-	-	-	11-1/2	292	29	737
7-1/4	184	34	864	-	2	-	-	-	-	13-1/4	337	32-1/8	816
7-3/4	197	36-1/8	918	-	-	-	1	-	-	14-1/2	368	34-1/8	867
8-3/4	222	39-3/4	1010	1	-	-	1	-	-	16-1/4	413	37-3/8	949
10-3/8	264	45-5/8	1159	-	-	2	-	-	-	19-1/4	489	42-1/2	1080
10-5/8	270	46-3/4	1187	-	-	-	-	1	-	20-1/2	521	44-5/8	1133
11-7/8	302	51-3/8	1305	1	-	-	-	1	-	22-1/4	565	47-3/4	1213
13-1/2	243	57-1/4	1454	-	-	-	2	-	-	25-1/4	641	52-7/8	1343
13-3/4	349	58-3/8	1483	-	-	-	-	-	1	26-1/2	673	55	1397
15	381	63	1600	1	-	-	-	-	1	28-1/4	718	58-1/8	1476
16-1/2	419	68-3/4	1746	-	1	-	-	-	1	31-1/4	794	63-1/4	1607
18	457	74-5/8	1895	-	-	1	-	-	1	34-1/4	870	68-1/2	1740
19-5/8	498	80-3/8	2042	-	-	-	1	-	1	37-1/4	946	73-3/4	1873
20-5/8	524	84-1/8	2137	1	-	-	1	-	1	39-1/8	994	76-7/8	1953
22-3/4	578	91-7/8	2334	-	-	-	-	1	1	43-1/4	1099	84-1/8	2137
24	610	96-1/2	2451	1	-	-	-	1	1	45-1/8	1146	87-1/4	2216
25-7/8	657	103-1/2	2629	-	-	-	-	-	2	49-1/4	1251	94-1/2	2400

Proper assembly of air-cooled chimney parts result in an overlap at chimney joints of 1-1/4 in. (32 mm). Effective length is built into this chart.

C. Assemble Chimney Sections

***WARNING! Risk of Fire! DO NOT** install substitute or damaged chimney components.*

- *Use only those components described in this manual.*

Substitute or damaged chimney components could impair safe operation and cause overheating and fire.

- Support the pipe during construction and check to be sure inadvertent loading has not dislodged the chimney section from the fireplace or at any chimney joint.
- Attach a straight chimney section or an offset to the top of the fireplace.
- Place inner flue to the inside of the chimney section below it. Place the outer casing outside the outer casing of the chimney section below it. Refer to Figure 8.4.

***NOTICE:** Chimney sections cannot be disassembled once locked together. Plan ahead!*

- Lock chimney sections and/or offsets/returns together by pushing downward until the top section meets the stop bead on the lower section.
- Pull on the top section to make sure it is fully engaged and will not separate.
- You may use #6 or #8 sheet metal screws no longer than 1/2 in. (13 mm) to fasten chimney sections together. Do NOT penetrate inner flue.

***WARNING! Risk of Fire!** You MUST use screws (provided) to fasten offset/returns to chimney sections to keep the chimney parts from twisting. Failure to do so could cause fire.*

- Fasten offset/returns to chimney sections. Insert the screws (provided) through the predrilled holes. Do NOT penetrate inner flue.
- Secure chimney returns with hanger straps provided; fasten to studs or joists.
- Vertical straight runs of chimney must be supported every 35 ft (10.7 m).

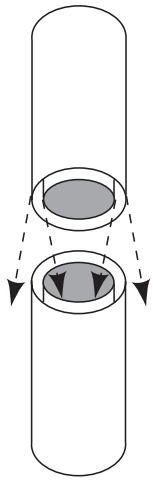

Figure 8.4 Assembling Chimney Sections

D. Install Ceiling Firestops

***CAUTION! Risk of Fire!** Ceiling firestops must be used whenever the chimney penetrates a ceiling/floor.*

- *Chase construction requires ceiling firestops at each floor or every 10 ft (3.05 m) of clear space.*
- *The ceiling firestop slows spread of fire and reduces cold air infiltration.*
- Install a ceiling firestop whenever chimney penetrates ceiling/floor.
- Mark and cut an opening in ceiling as shown in Figure 8.5.
- Frame the opening with the same size lumber used in the ceiling joists.
- Nail the ceiling firestop to the bottom of the ceiling joists when there is a room above.
- Use an attic insulation shield if the ceiling is insulated. The ceiling firestop may then be attached above or below the joists.

***WARNING! Risk of Fire! DO NOT** seal area between firestop opening and chimney pipe except where they enter the attic or leave the warm air envelope of the home (use 600° F sealant).*

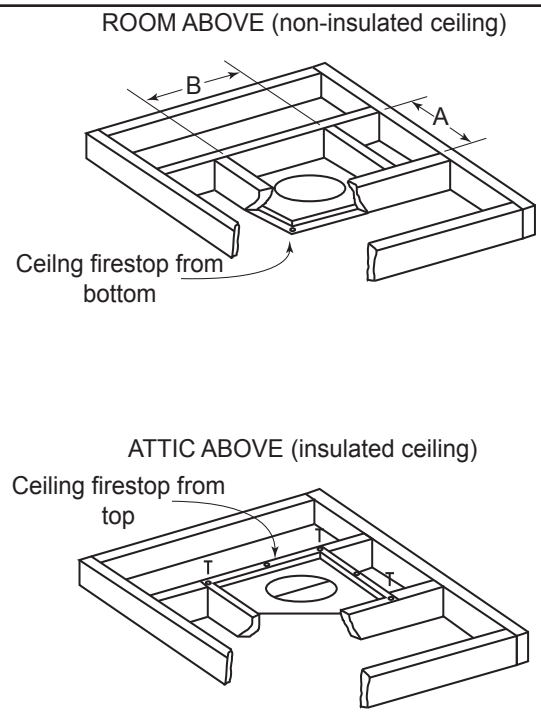

Note: Use same dimensional lumber for framing ceiling firestop and joists.

Catalog #	A		B		Angle
	in.	*mm*	*in.*	*mm*	
FS338	14-1/2	368	14-1/2	368	0°
FS339	14-1/2	368	18-3/8	467	15°
FS340	14-1/2	368	23	584	30°

Figure 8.5 Installing the Ceiling Firestop

E. Installing the Attic Insulation Shield

WARNING! Risk of Fire! You MUST install an attic installation shield when there is any possibility of insulation or other combustible material coming into contact with the chimney.

- **DO NOT** pack insulation between the chimney and the attic insulation shield.
- Failure to keep insulation and other materials away from the chimney pipe could cause a fire.
- **DO NOT** offset chimney inside insulation shield.
- Combustible material may come into contact with the attic insulation shield as long as the required clearances are maintained to the chimney pipe.

Installation of a ceiling firestop is required:

Note: In Canada a CAS8 must be installed. See instructions provided with kit.

- Refer to Figures 8.6, 8.7, and 8.8.
- If the attic shield is pre-rolled continue. If it is a flat part, try to roll it up to aid in wrapping it around the chimney.
- Pre-bend all the tabs in at the top to 45 degrees.
- Wrap the shield (around the chimney if already installed) until you have an overlap and the three holes on each side match up (large holes on top).
- Insert three screws into the matching holes to form a tube starting at the bottom.
- Bend the tabs on the bottom of the tube inward to 90 degrees to maintain chimney air space.
- Rest the insulation shield on the ceiling firestop below.
- Tape off any openings around the bottom.

If you want to make a custom shield or barrier, follow these guidelines:

- Metal is preferred, although any material stiff enough to hold back the insulation can be used.

  WARNING! Risk of Fire! Use of cardboard or other materials that can deflect under humidity or other environmental conditions is not recommended.

- The shield or barrier must be tall enough to extend above the insulation and prevent blown-in insulation from spilling into the cavity and accommodate the amount of insulation as required by the National Building Code.
- Maintain specified air spaces around chimney.
- Check instructions and local codes for further details.

Double-check the Chimney Assembly

Continue assembling the chimney sections up through the ceiling firestops as needed. While doing so, be aware of the height and unsupported chimney length limitations given under Section C.

Check each section by pulling up slightly from the top to ensure proper engagement before installing the succeeding sections. If they have been connected correctly, they will not disengage when tested.

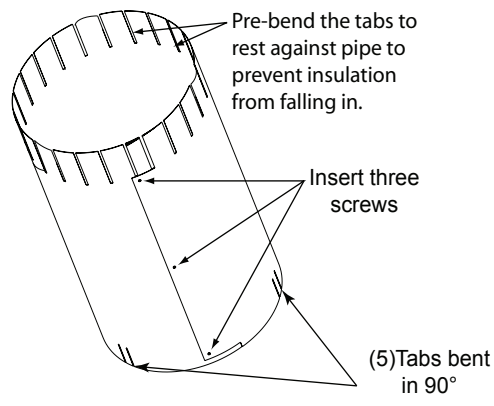

Figure 8.6 Prepare Attic Insulation Shield

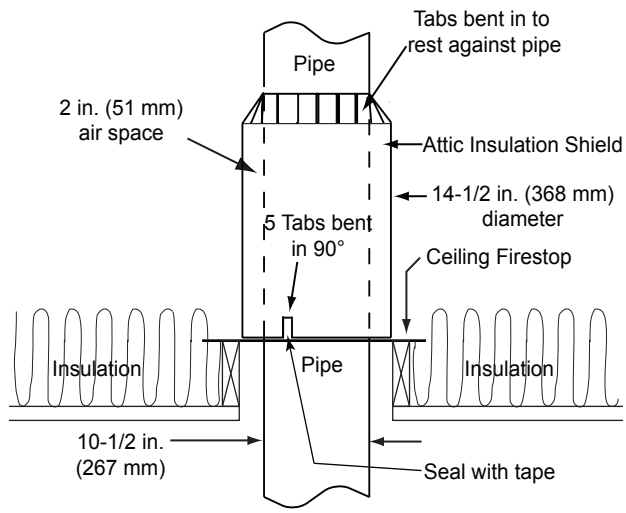

Figure 8.7 Install Attic Insulation Shield (firestop above ceiling)

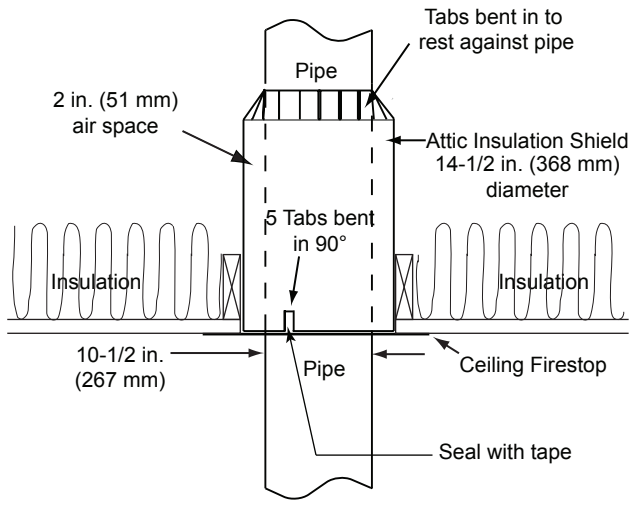

Figure 8.8 Install Attic Insulation Shield (firestop below ceiling)

F. Cut out Hole in Roof

- Refer to Figure 8.6.
- Plumb from roof to center of chimney.
- Drive a nail up through roof to mark center of pipe.
- Measure to either side of nail and mark the 14-1/2 in. x 14-1/2 in. (368 mm x 368 mm) opening required.
- Measure opening on the horizontal; actual length may be larger depending on roof pitch.
- Cut out and frame opening.
- Refer to **Chapter 25** of the **Uniform Building Code** for roof framing details.

G. Complete Installation

WARNING! Risk of Fire! *You MUST maintain 2 in. (51 mm) air space to insulation and other combustible materials around the chimney system. Failure to do so could cause overheating and fire.*

- Keep chimney sections from separating or twisting.
- You may secure straight chimney sections at the joints with screws no longer than 1/2 in. (13 mm).

The following steps should be skipped if using a chase.

- Install roof flashing appropriate to roof pitch.
- Install round termination cap and storm collar.

H. Install Flashing

- Assemble chimney so it passes through the framed opening.
- Slip the flashing over the chimney.

  NOTICE: *Roofing shingles must be below the flashing plate on the lower side of a sloped roof and over the flashing plate on the sides and top.*

- Nail the flashing to the roof. Keep gaps between the flashing plate and the roof to a minimum.
- Caulk the flashing plate and roof junction as well as the vertical seam on the flashing. All nail heads must be caulked with a roofing sealant.
- Caulk the overlap seam of any exposed pipe sections that are located above the roof line to prevent leaks.

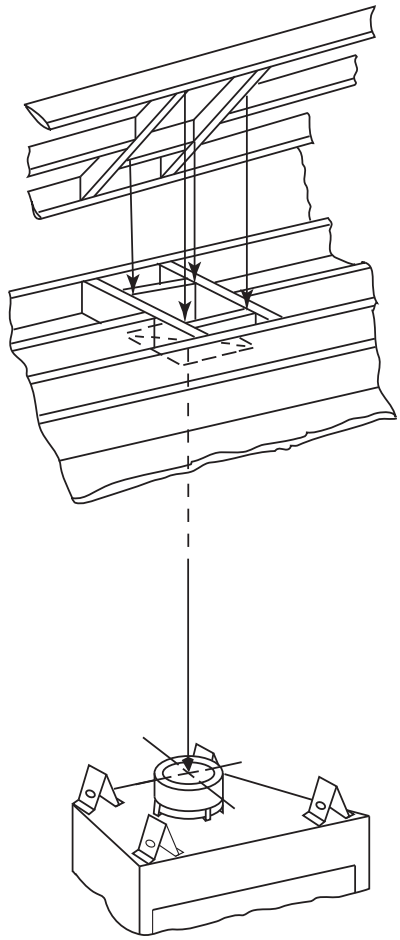

Figure 8.9 Ceiling/Attic Construction

I. Chimney Termination Requirements

- Install a cap approved and listed for this fireplace system.
- Locate cap where it will not become plugged by snow or other materials.
- Locate cap away from trees or other structures.
- The bottom of the termination cap must be at least 3 ft (.91 m) above the roof AND at least 2 ft (.61 m) above any portion of roof within 10 ft (3.05 m) as shown in Figure 8.10.
- The distance required between caps is shown in Figure 8.10.

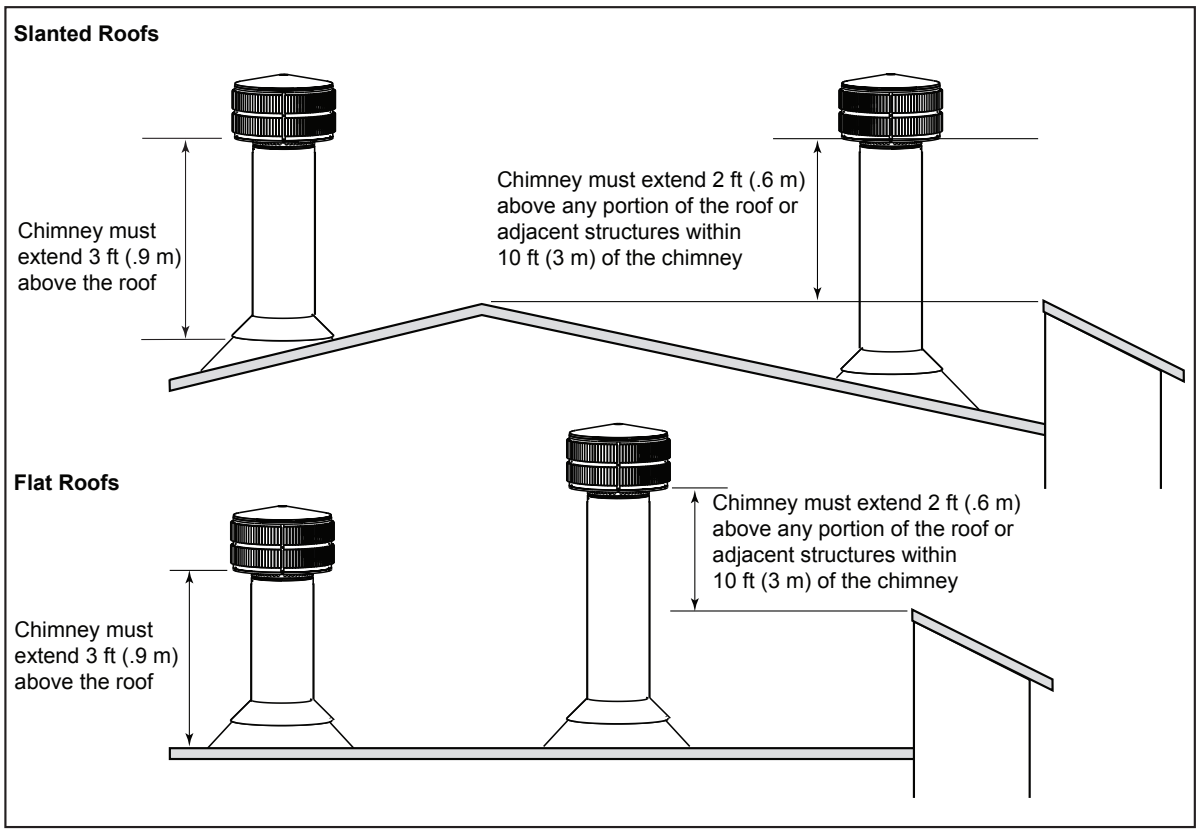

Multiple Chimney Locations

A	B
6 in. (minimum) up to 20 in. *152 mm/508 mm*	18 in. minimum *457 mm*
20 in. and over	0 in. minimum

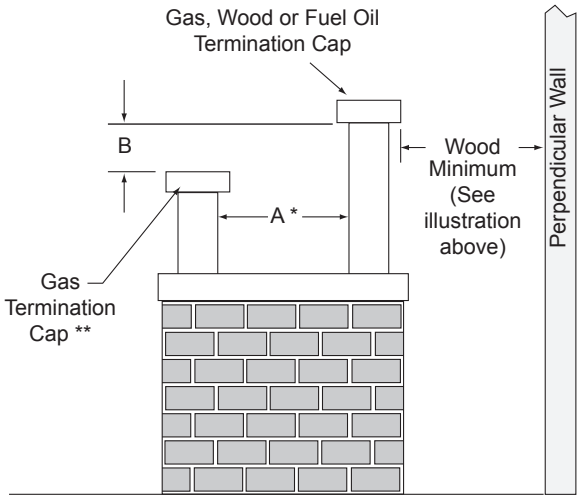

* If using decorative cap cover(s), this distance may need to be increased. Refer to the installation instructions supplied with the decorative cap cover.

** In a staggered installation with both gas and wood terminations, the wood termination cap must be higher than the gas termination cap.

Figure 8.10 Multiple Chimney Locations

9 Chase Installations

A. Construct the Chase

A chase is a vertical boxlike structure built to enclose the fireplace and/or its vent system. Vertical chimneys that run on the outside of a building must be installed inside a chase.

Construction of the chase may vary with the type of building. These instructions are not substitutes for the requirements of local building codes. Local building codes MUST be checked.

For outside chase construction, insulation is not required.

Building codes require false ceiling and ceiling firestops at each floor of the chase or every 10 ft (3.05 m) of clear space to control spread of fire.

Gas line holes and other openings should be caulked with high temperature caulk or stuffed with unfaced fiberglass insulation.

Three examples of chase applications are shown in Figure 9.2.

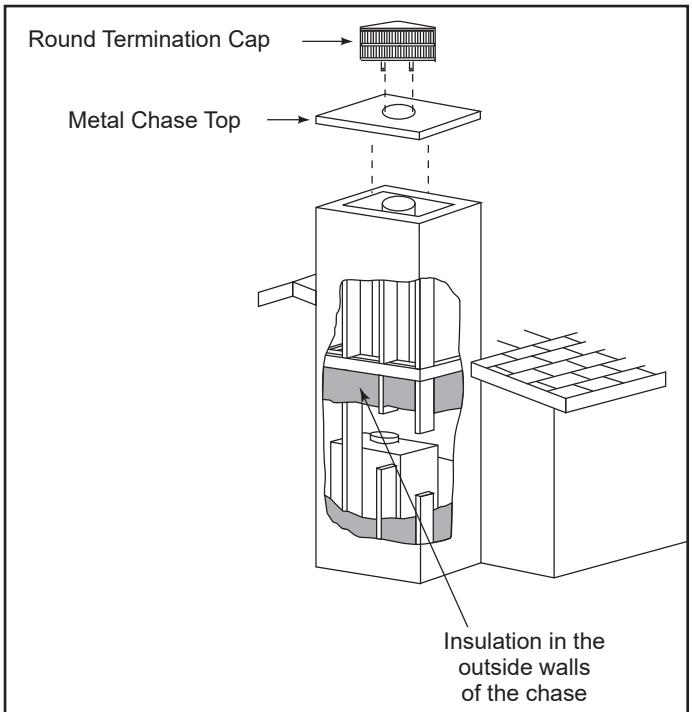

Figure 9.1 Chase Assembly

1. Fireplace and chimney enclosed in an exterior chase.
2. Chimney offset through exterior wall and enclosed in chase.
3. Chase constructed on roof.

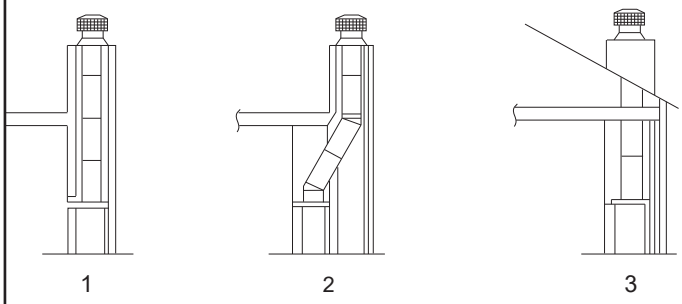

Figure 9.2 Chase Constructions

WARNING! Risk of Fire! DO NOT *seal area between fire stop opening and chimney pipe except where they enter the attic or leave the warm air envelope of the home (use 600° F sealant).*

WARNING! Risk of Fire! *You must maintain a minimum 2 in. (51 mm) air space clearance to insulation and other materials surrounding the chimney system.*

- *Insulation and other materials must be firmly secured to prevent accidental contact with chimney system.*
- *The chase must be properly blocked to prevent blown insulation or other combustibles from entering and making contact with fireplace or chimney.*
- *Failure to prevent contact between insulation or other materials and chimney system may cause overheating and fire.*

B. Install Fireplace & Chimney

Install as per Sections 7 and 8.

C. Install Chase Top

- You MUST use a chase top in a chase installation. Chase tops are available from your Hearth & Home Technologies dealer or may be field constructed.
- Include a turndown and drip edge to prevent water from seeping into the chase.
- Include a 2 in. (51 mm) soldered, welded or spun collar around pipe opening to keep water out.
- Provide a 1/8 in. (3 mm) gap around the flue pipe.
- Slope the chase top downward away from the opening.

  WARNING! Risk of Fire! DO NOT *caulk the pipe to the chase top collar.*

- Caulk all seams to prevent leaks.
- Refer to Figure 9.3.

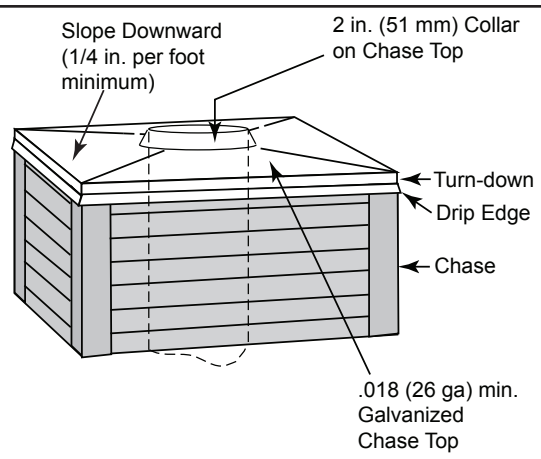

Figure 9.3 Chase Top Construction

D. Install Termination Cap

Install the chimney sections up through the chase enclosure.

- Caulk the overlap seam of any exposed pipe sections that are located above the roof line to prevent leaks.
- Refer to termination cap instructions.

  WARNING! Risk of Fire! *The minimum overlap of cap to pipe (as shown in the following illustrations) MUST be met or chimney may separate from cap. Separation allows sparks, heat and embers to escape.*

  NOTICE: *Paint the termination cap with a rust-resistant paint to protect against the effects of corrosion on those parts exposed to the weather.*

- TR344 Round Termination Cap

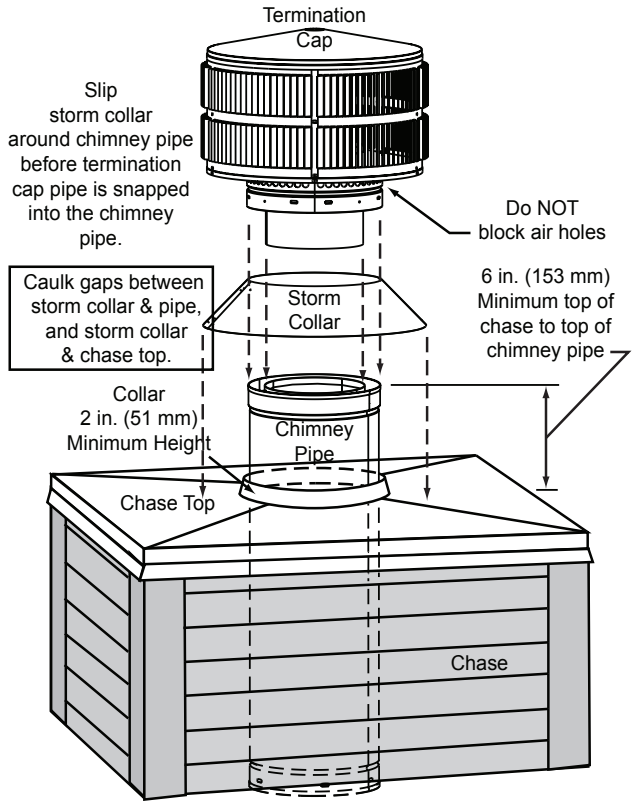

Termination cap pipe and chimney section must be snapped together to maintain an overlap of 1-1/2 in. (38 mm).

Figure 9.4 Installing a TR344 Round Termination Cap

- TR342 Round Telescoping Termination Cap

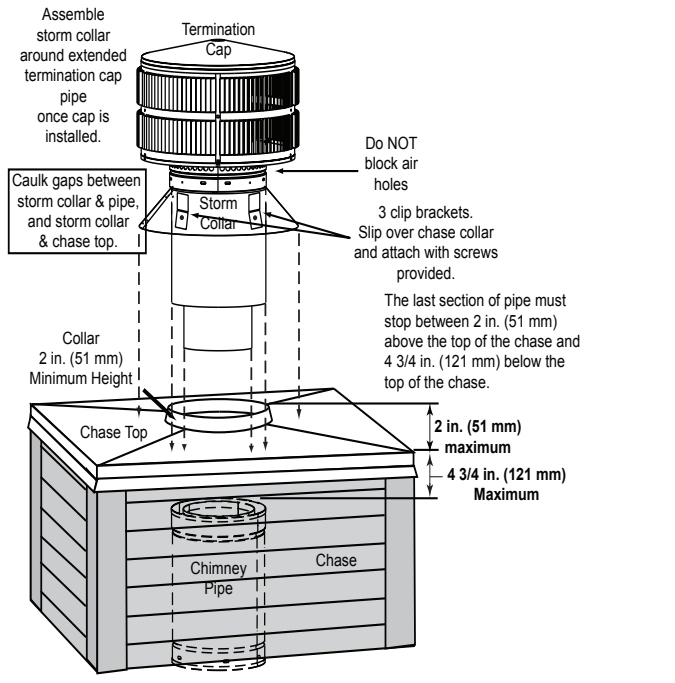

Figure 9.5 Installing a TR342-B Round Telescoping Termination Cap

- ST375 Square Termination Cap

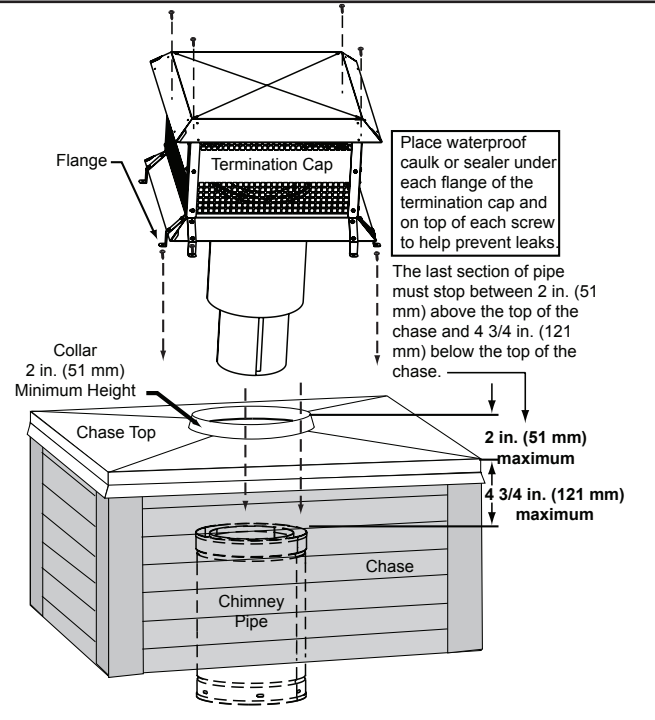

Figure 9.6 Installing an ST375 Square Termination Cap

- TS345/TS345P Square Termination Cap

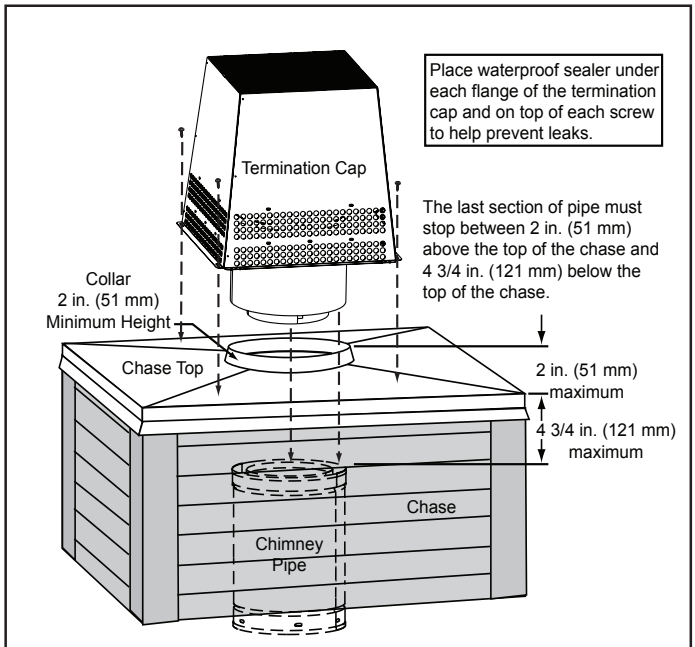

Figure 9.7 Installing a TS345/TS345P Square Termination Cap

- TCT375 Terra Cotta Cap

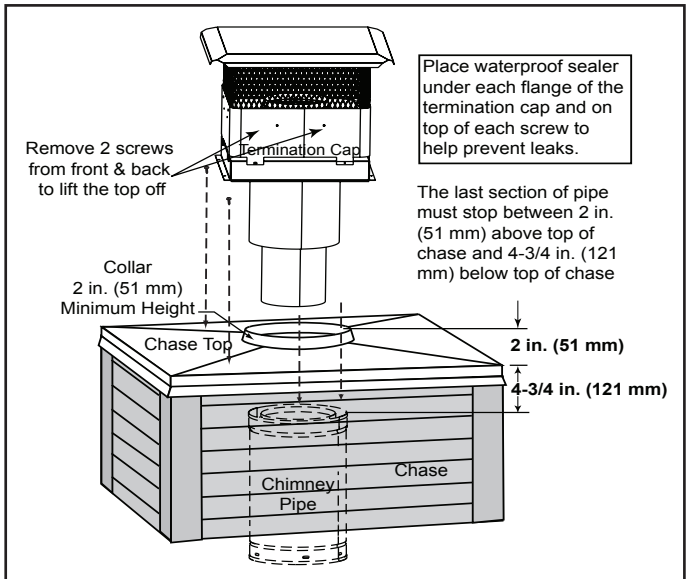

Figure 9.8 Installing a TCT375 Terra Cotta Cap

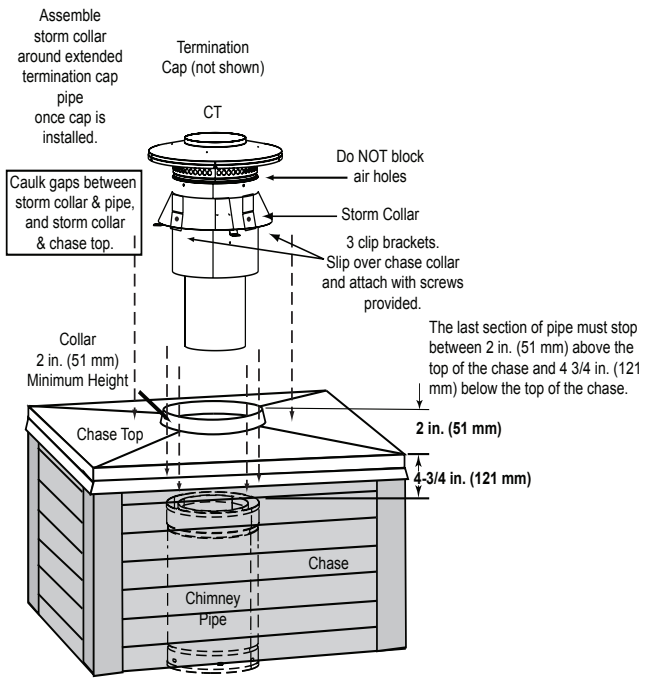

Figure 9.9 Installing a DTO134/DTO146/DTS134/DTS146 Cap

10 Shrouds

A. Radiation Shield

- Some shrouds require a radiation shield. Use where specified.
- Radiation shield must be constructed of minimum 26 ga sheet metal.

B. Field Constructed Shrouds

WARNING! Risk of Fire! *Shrouds must be constructed as specified. Improper construction may overheat chase top.*

- Chase top shrouds may be field constructed where permitted by regional building codes.

  NOTICE: *Some regional codes require an agency-Listed shroud. Consult your local building officials.*
- Hearth & Home Technologies Inc. supplies UL listed shrouds. See your dealer for details.
- The following field constructed shroud designs have been tested for Hearth Technologies fireplace systems and termination caps.
- The shrouds must be constructed from a minimum .018 in. (26 ga) thick aluminized steel.

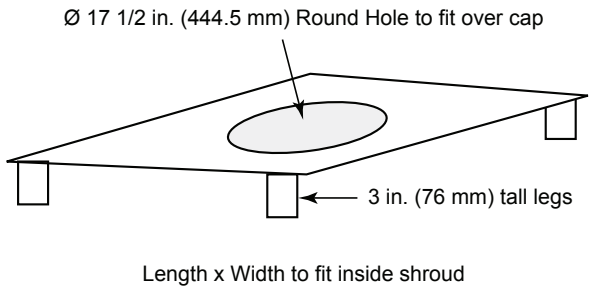

Figure 10.1 Radiation Shield

- The wire mesh is optional but recommended and must be .018 in. thick minimum, 1/2 in. mesh.

Open Top Shroud (TR342 caps require radiation shield)

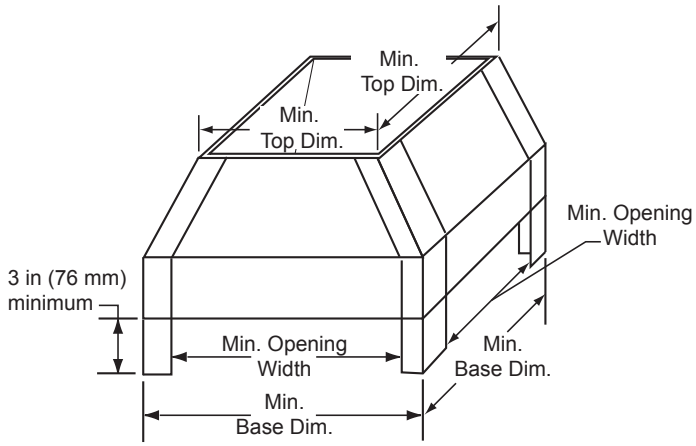

	TS345	TR344 TR342B	TR342B/TR344 with TR-TVK
Min. Base Dims.			
in	23 x 23	28 x 28	26 x 26
mm	584 x 584	711 x 711	660 x 660
	Radiation Shield Not Required	**Radiation Shield Required**	**Radiation Shield Not Required**
Min. Top Dims.			
in	20 x 20	25 x 25	23 x 23
mm	508 x 508	635 x 635	584 x 584
Min. Opening Width			
in	17 x 17	22 x 22	20 x 20
mm	432 x 432	559 x 559	508 x 508

Figure 10.2 Open Top Shroud Dimensions

Mailbox Style Shroud (radiation shield required)

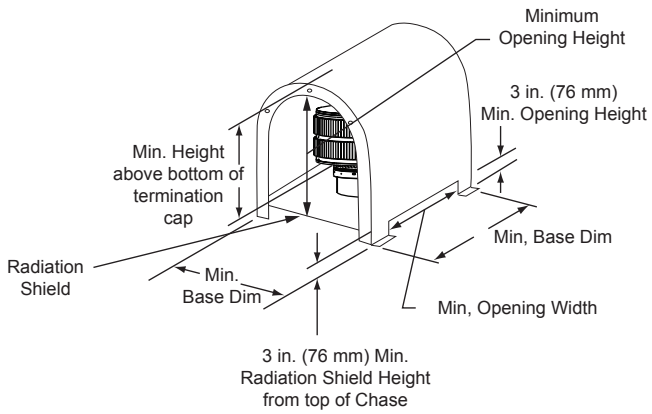

	TR344 TR342-B	TR342-B TR344/ with TR-TVK
Min. Base Dims.		
in	26-1/2 x 28	28 x 30
mm	673 x 711	711 x 762
Min. Height Above Bottom of Termination Cap		
in	28-1/4	27-1/2
mm	718	698
Min. Opening Width		
in	20-1/2	22
mm	521	559
Min. Opening Height		
in	18-1/4	17-1/2
mm	464	445

Figure 10.3 Mailbox Style Shroud Dimensions

Roofed Style Shroud (radiation shield required)

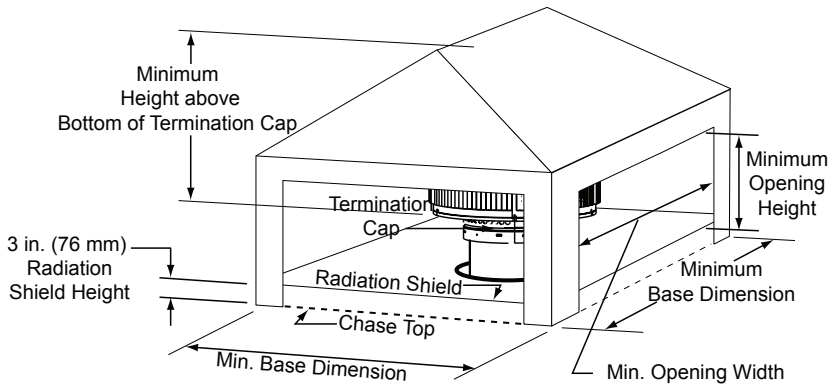

TR342B/344 TR442B/444 or with TR-TVK	
Min. Base Dims.	
in	27 x 27
mm	686 x 686
Min. Height Above Bottom of Termination Cap	
in	23
mm	584
Min. Opening Width	
in	21
mm	533
Min. Opening Height	
in	12
mm	305

Figure 10.4 Roofed Style Shroud Dimensions

11 Finishing

A. Non-Combustible Materials

- Materials which will not ignite and burn, composed of any combination of the following:
  - Steel - Iron
  - Brick - Tile
  - Concrete - Slate
  - Glass - Plasters
- Materials reported as passing **ASTM E 136, Standard Test Method for Behavior of Metals, in a Vertical Tube Furnace at 750° C**

B. Combustible Materials

- Materials made of or surfaced with any of the following materials:
  - Wood - Compressed paper
  - Plant fibers - Plastic
- Any material that can ignite and burn; flame proofed or not, plastered or un-plastered

Table 11.1

R = 1/k x inches of thickness

C. Hearth Extension

WARNING! Risk of fire! *High temperatures, sparks, embers or other burning material falling from the fireplace may ignite flooring or concealed combustible surfaces.*

- *Protective metal hearth strips MUST be installed.*
- *Hearth extensions MUST be installed exactly as specified.*

- You MUST use a hearth extension with this fireplace.
- Refer to Figure 11.1 for minimum dimensions.
- This fireplace has been tested and approved for use with a hearth extension insulated to a minimum R value of 1.03.
- The hearth extension material MUST be covered with tile, stone or other non-combustible material.
- Manufactured hearth materials will usually have a published **R value** (resistance to heat) or **k value** (conductivity of heat). Refer to the formula in Table 11.1 to convert a k value to an R value,
- Refer to Table 11.2 for hearth extension insulation alternatives.

Table 11.2

Hearth Extension Insulation Alternatives-Total minimum R Value must equal 1.03

Material	k per inch thick	r per inch thick	Minimum thickness required
Hearth & Home HX3, HX4 (Micore 300™)	0.49	2.06	1/2 in.
USG Micore 160™	0.39	2.54	1/2 in.
USG Durock™ Cement Board	1.92	0.52	2 in.
Cement Mortor	5.0	0.20	5-1/8 in.
Common Brick	5.0	0.20	5-1/8 in.
Ceramic Tile	12.50	0.08	12-1/4 in.
Armstrong™ Privacy Guard Plus	0.46	2.18	1/2 in.
Marble	14.3-20.0	0.07-0.05	14-5/8 in. - 20-3/8 in.

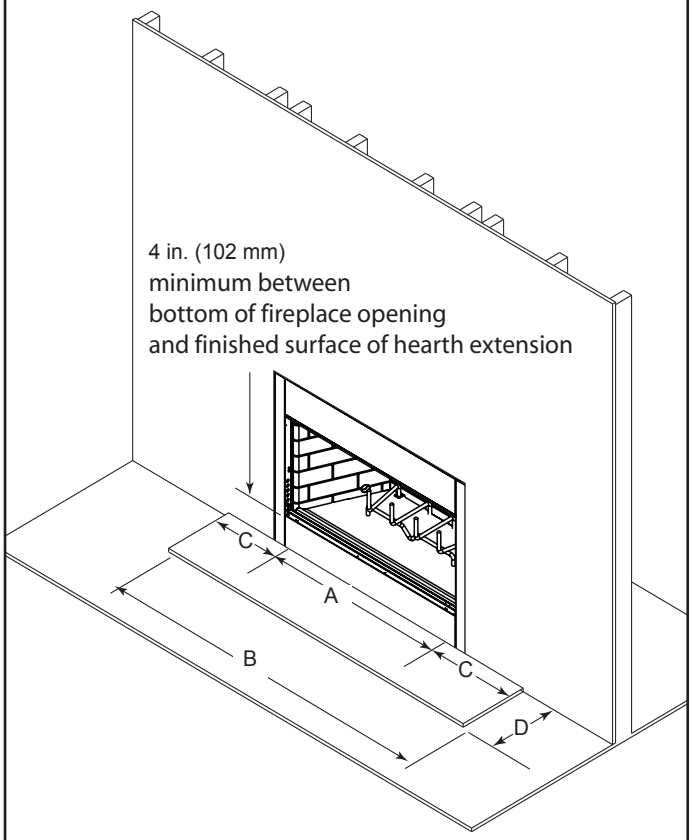

Model #		A	B	C	D
ODVILLA-36	in.	36	52	8	16
	mm	914	1321	203	406
ODVILLA-42	in.	42	66	12	20
	mm	1067	1676	305	508

Figure 11.1 Hearth Extension Dimensions

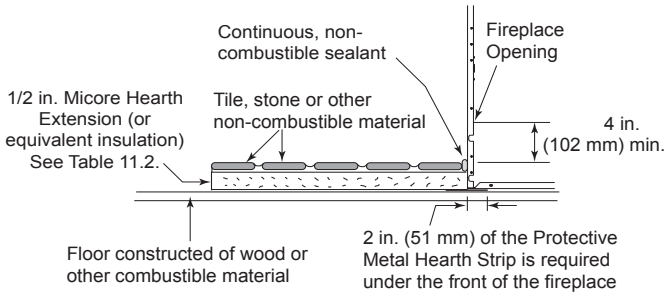

Figure 11.2 Hearth Extension Construction

Raised Hearth Extension Framing

WARNING! Risk of Fire. *A raised hearth extension built flush with the fireplace opening (Figure 11.3) or less than 4 in. (102 mm) below the fireplace opening requires the fireplace be installed on a non-combustible surface.*

The hearth framing must be constructed of non-combustible materials (Figure 11.2) and placed on 1/2 in. Micore, or equivalent material (Figure 11.4). When creating the platform, allow for the thickness of the non-combustible finishing materials (Figure 11.5).

IMPORTANT! Hearth extension design must be determined before installation of fireplace.

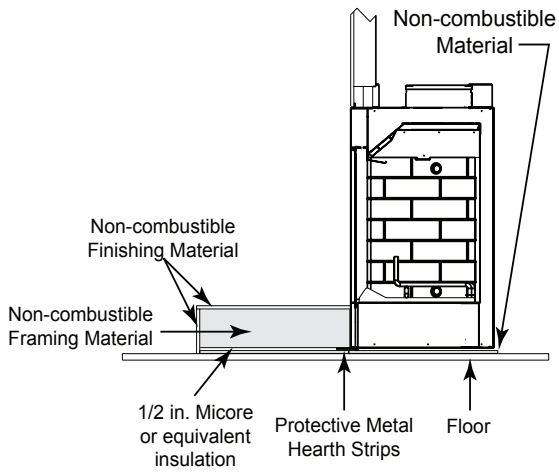

Figure 11.3 Raised Platform Hearth Extension Detail

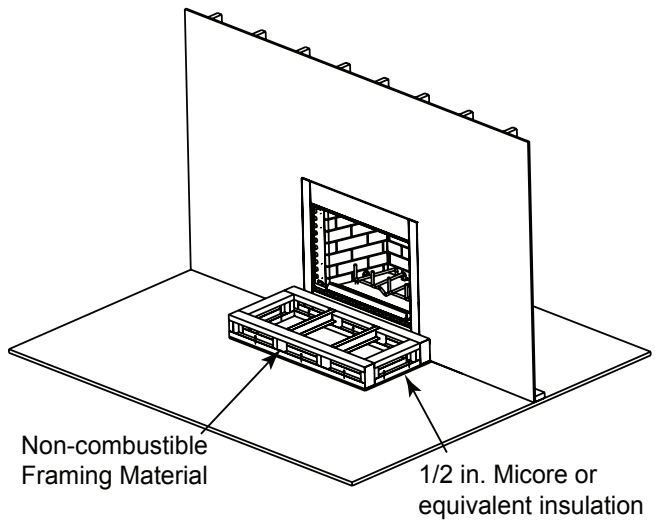

Figure 11.4 Raised Platform Hearth Extension-Framing Materials

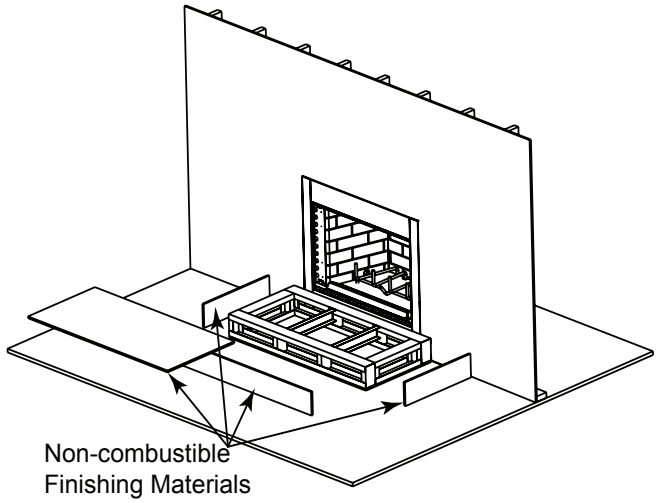

Figure 11.5 Raised Platform Hearth Extension-Finishing Materials

Non-combustible Sealant

After completing the framing and applying the facing materials over the framing, a bead of non-combustible sealant must be used to close off any gaps at the top and sides between the fireplace hearth.

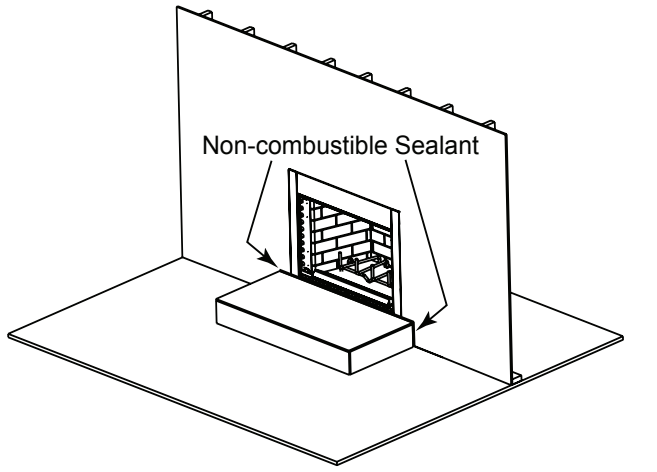

Figure 11.6 Place Non-combustible Sealant

D. Finishing Material

Refer to Sections 11.A. and Sections 11.B. for combustible/non-combustible materials. Refer to Figure 11.7 for non-combustible zone.

WARNING! Risk of Fire! *You must maintain clearances.*

- *Use only non-combustible framing material below standoffs.*
- *Sheetrock, wood or other combustibles must NOT be used as sheathing or facing in the non-combustible zone.*
- ***DO NOT*** *cover metal fireplace front with combustible materials.*
- *Install combustible materials only to specified clearances on top front and side edges.*
- Complete framing and apply drywall over framing.
- A bead of 300° F minimum non-combustible sealant must be used to close off any gaps at the top and sides between the fireplace and drywall/non-combustible material to prevent cold air leaks.
- Large gaps can be bridged with fiberglass rope gasket.
- Only non-combustible materials may be used to cover the metal fireplace front. See Figure 11.8.

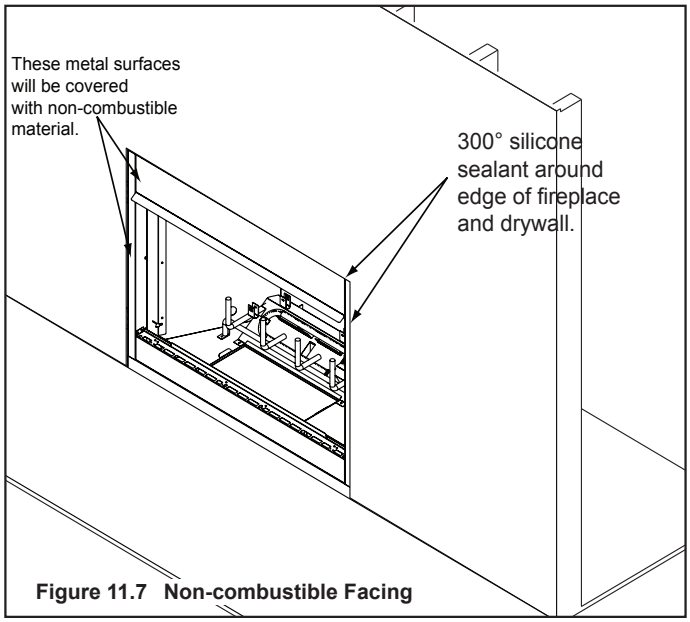

Figure 11.7 Non-combustible Facing

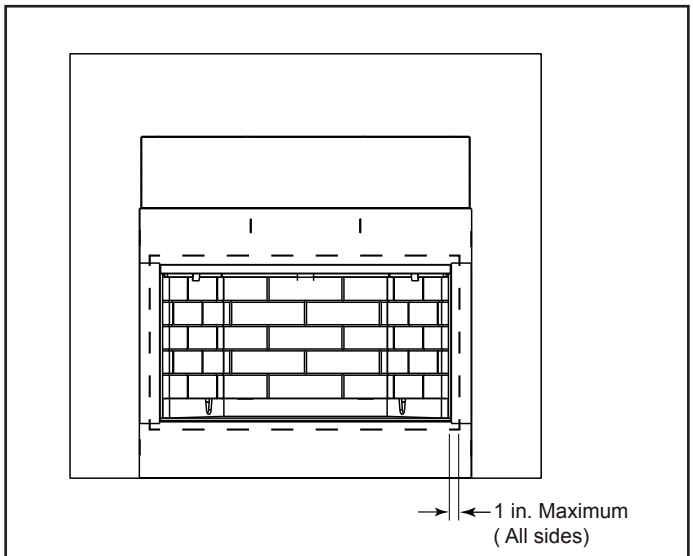

CAUTION: This fireplace requires the front of the appliance to be covered with a noncombustible material (e.g. stone, marble, tile, etc.). A maximum of 1 in. of exposed metal on all sides is permitted.

Figure 11.8 Non-combustible Material

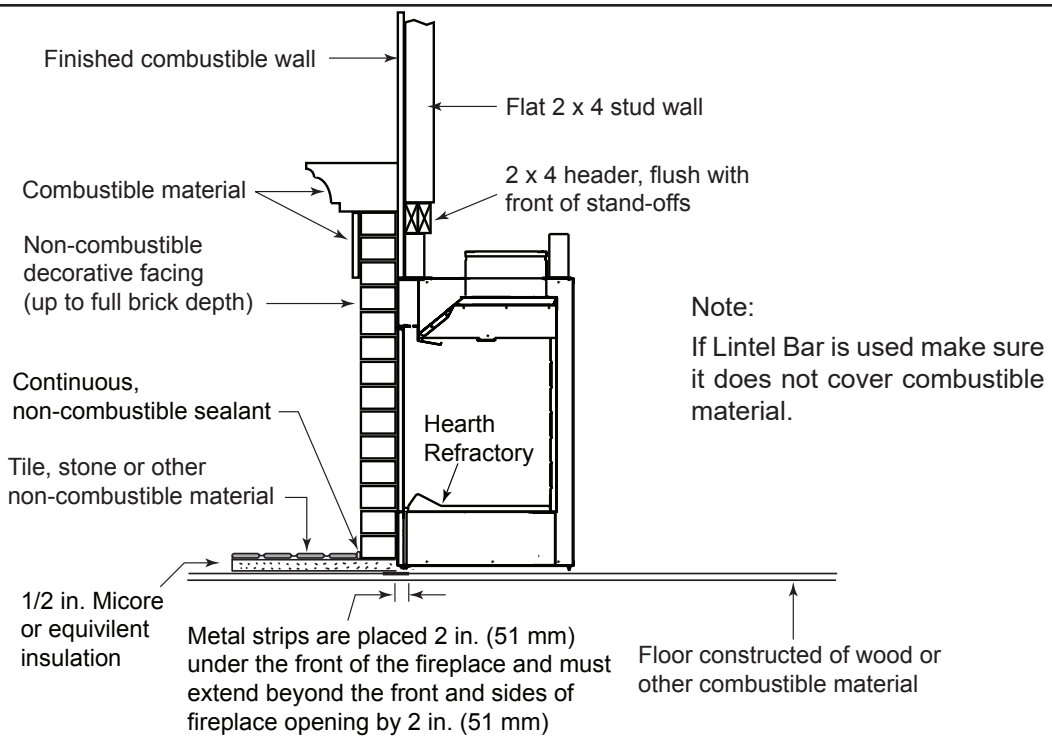

Figure 11.9 Decorative Facing

E. Combustible Mantel

- Refer to shaded areas of Figure 11.10 for the location and dimensions of a combustible mantel.
- A combustible mantel may be positioned no lower than 12 in. (305 mm) above the top of the fireplace opening.
- A combustible mantel may have a maximum depth of 12 in. (305 mm).
- Combustible trim and materials cannot be placed within 6 in. (152 mm) of the fireplace opening (top or sides).
- Combustible materials projecting more than 1 1/2 in. (38 mm) shall not be placed within 12 in. (305 mm) from the top of the fireplace opening.
- Combustible trim must not cover the metal surfaces of the fireplace.
- Mantel clearance is in accordance with **Section 7-3.3.3** of **ANSI/NFPA211**.

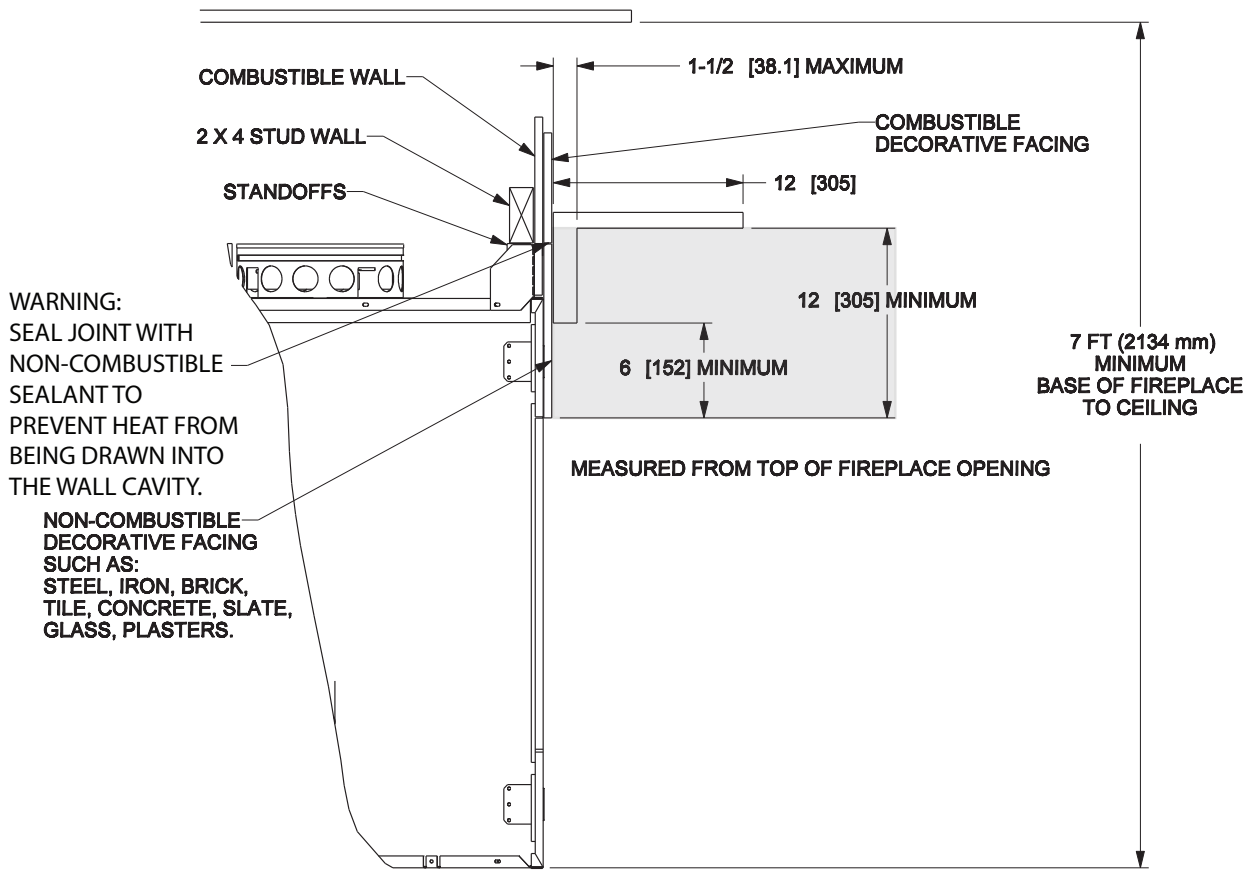

Figure 11.10 Clearances to Mantels or other Combustibles above Fireplace

F. Sidewalls/Surrounds

- Adjacent combustible sidewalls must be located a minimum of 12 in. (305 mm) from the fireplace opening.
- Combustible or non-combustible mantel legs, surrounds and stub walls may be constructed per Figure 11.11.

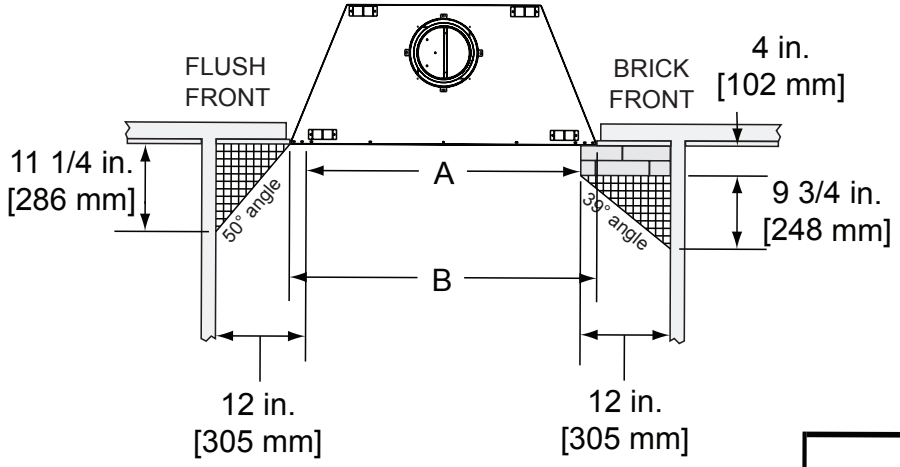

Model	A Fireplace opening	B Outside Dimensions
ODVILLA-36	36 in.	41 in.
	914 mm	1041 mm
ODVILLA-42	42 in.	47 in.
	1067 mm	1194 mm

Figure 11.11 Mantel Leg or Wall Projections (acceptable on both sides of opening)

12 Accessories

A. Gas Log/Lighter Provision

***WARNING! Fire and/or Asphyxiation Risk!** Use with solid wood fuel or decorative gas appliance only. Gas fire generates fumes.*

A certified gas log lighter or decorative gas log set, vented or unvented can be installed in this fireplace.

- Maximum input is 100,000 BTU/hr.
- Decorative gas appliance must be certified to **ANSI Z21.60** "Standard for Decorative Gas Appliances for Installation in Vented Fireplaces".
- Must be installed in accordance with the **National Fuel Gas Code, ANSI Z223.1.**
- A gas log set must incorporate a gas shutoff.
- Knockouts are provided on both sides of the fireplace and in refractories for 1/2 in. (13 mm) gas line.
- Seal refractory around gas line with fireplace mortar or a non-combustible sealant.

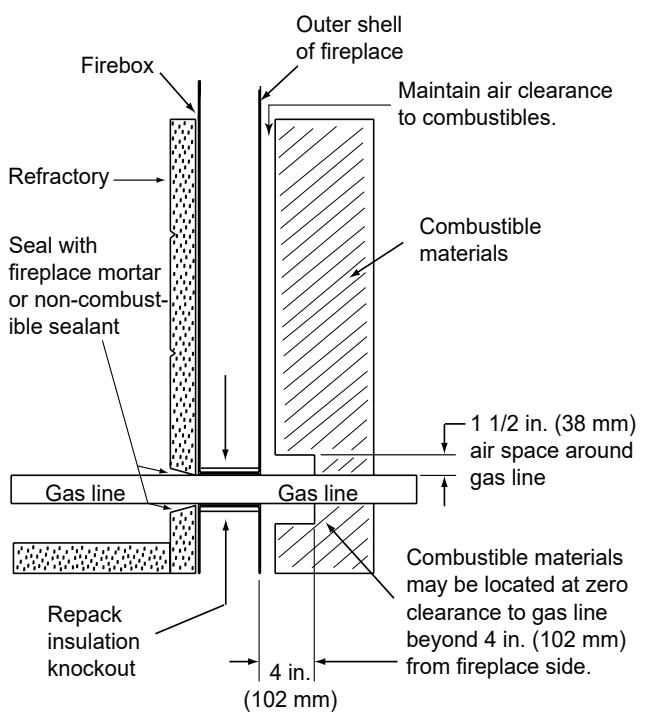

Figure 12.1 Gas Line Installation

13 Reference Materials

A. Appliance Dimensions/Weight

Appliance Weight Table

Model	Pounds
ODVILLA-36H-B	205
ODVILLA-36T-B	190
ODVILLA-42H-B	220
ODVILLA-42T-B	205

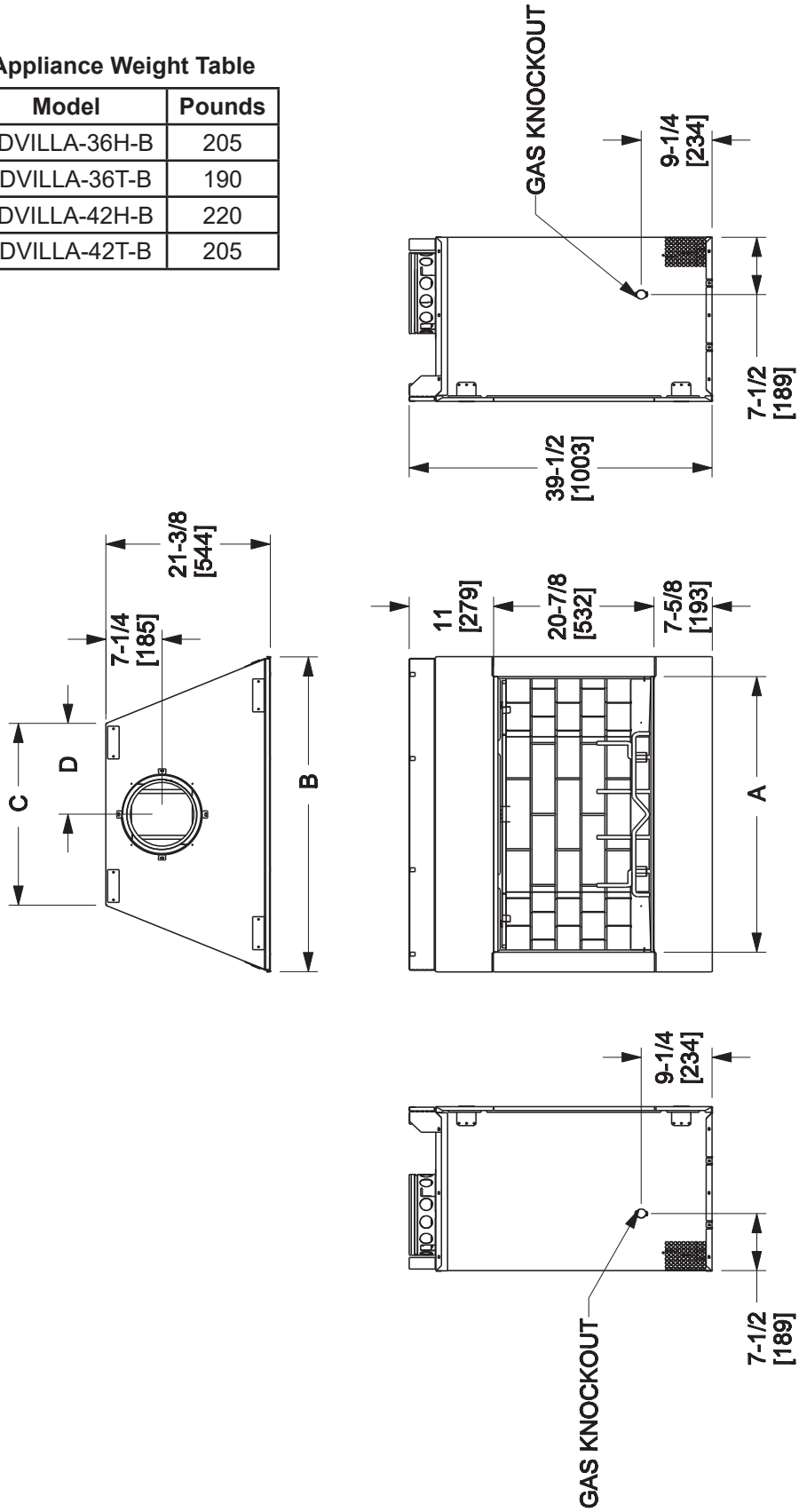

Model #		A	B	C	D
ODVILLA-36	in.	36	41	23 3/4	11 7/8
	mm	914	1041	603	302
ODVILLA-42	in.	42	47	29 3/4	14 7/8
	mm	1067	1194	756	378

B. Optional Components

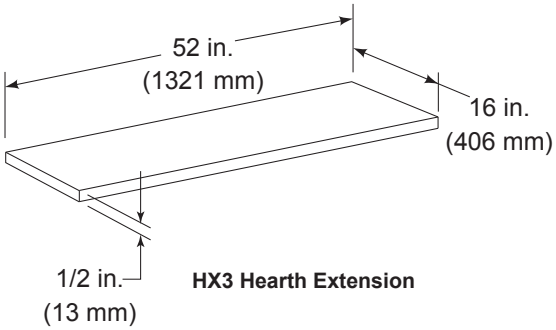

HX3 Hearth Extension

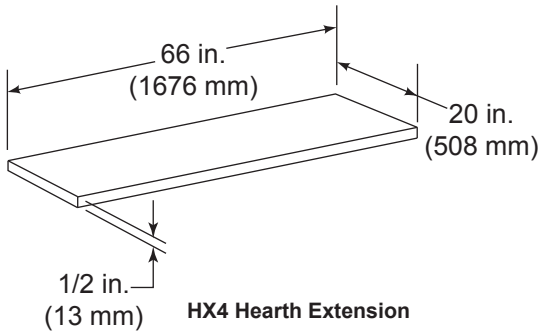

HX4 Hearth Extension

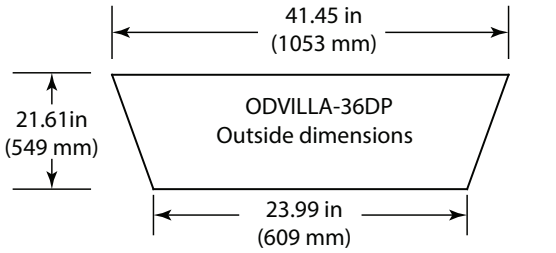

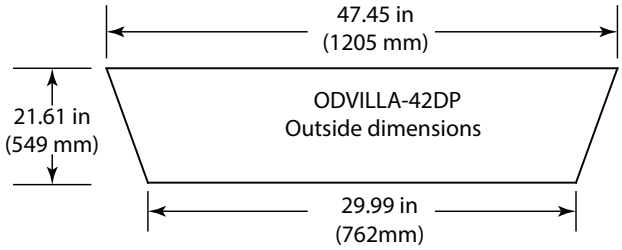

Drain Pan
ODVILLA-36DP
ODVILLA-42DP

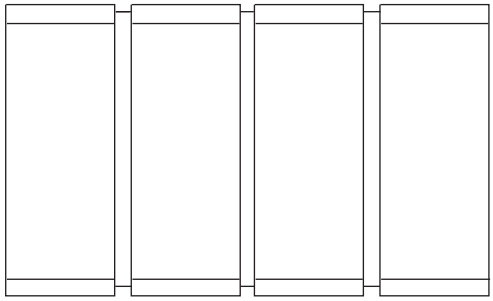

Bifold Glass Doors
ODVGF-36, ODVGF-42

C. Chimney Components

The following pictures show only those chimney components which may be safely used with this fireplace.

Catalog #	Description
CAK4A	Chimney Air Kit
SL306	Chimney Section - 6 in. (152 mm) long
SL312	Chimney Section - 12 in. (305 mm) long
SL318	Chimney Section - 18 in. (457 mm) long
SL324	Chimney Section - 24 in. (610 mm) long
SL336	Chimney Section - 36 in. (914 mm) long
SL348	Chimney Section - 48 in. (1219 mm) long
SL3	Chimney Stabilizer
SL315	Chimney Offset/Return - 15 deg
SL330	Chimney Offset/Return - 30 deg
FS338	Ceiling Firestop - Straight
FS339	Ceiling Firestop - 15 deg
FS340	Ceiling Firestop - 30 deg
AS8	SL300 Straight Attic Insulation Shield, 24 in. (610 mm)
JB877	Chimney Joint Band
CB876	Chimney Bracket
RF370	Roof Flashing - Flat to 6/12 Pitch
RF371	Roof Flashing - 6/12 to 12/12 Pitch
TR344	Round Termination Cap
TR342	Round Telescoping Termination Cap
ST375	Square Termination Cap
TS345	Square Termination Cap
TS345P	Square Termination Cap - Painted
TCT375	Terra Cotta Termination Cap
CT35	Chase Top
DTO134	Short Octagon Decorative Cap
DTO146	Tall Octagon Decorative Cap
DTS134	Short Square Decorative Cap
DTS146	Tall Square Decorative Cap
LDS33	Decorative Shroud - 3 ft x 3 ft (.91 m x .91 m)
LDS46	Decorative Shroud - 4 ft x 6 ft (1.22 m x 1.83 m)
LDS-BV	Decorative Shroud - 26 in. x 26 in. (660 mm x 660 mm)
	Field Constructed Shrouds (See “Woodburning Termination Cap”)
CT-3A	Adapter - May be used with the following copper caps
	CT-Series
	DT-Series
CAS8	Attic Shield Kit
ODVILLA-36DP	36T/36H Drain Pan
ODVILLA-42DP	42T/42H Drain Pan

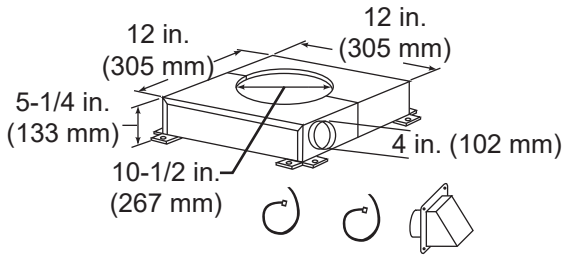

CAK4A Chimney Air Kit

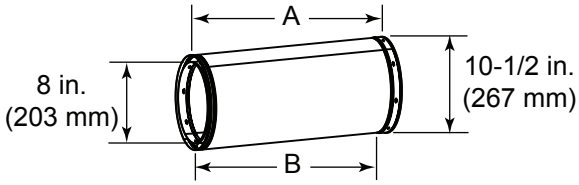

Chimney Sections

Catalog #	A		B	
	in	mm	in	mm
SL306	6	152	4-3/4	121
SL312	12	305	10-3/4	273
SL318	18	457	16-3/4	425
SL324	24	610	22-3/4	578
SL336	36	914	34-3/4	883
SL348	48	1219	46-3/4	1187

A = Actual Length
B = Effective Length (length of chimney part after it has been snapped to another)

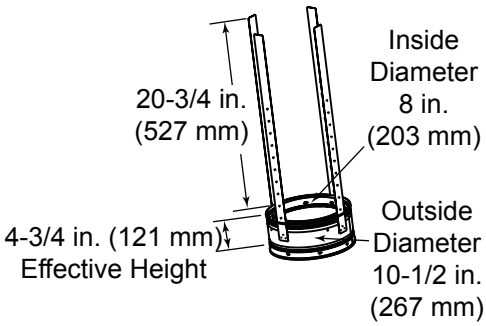

SL3 Vent Stabilizer

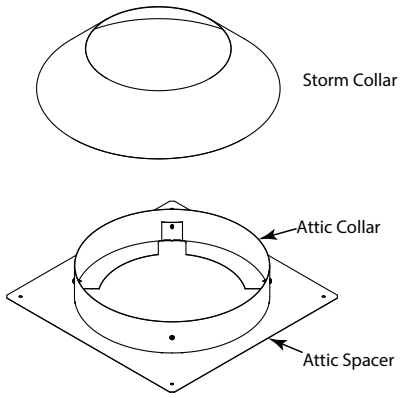

Attic Shield Kit

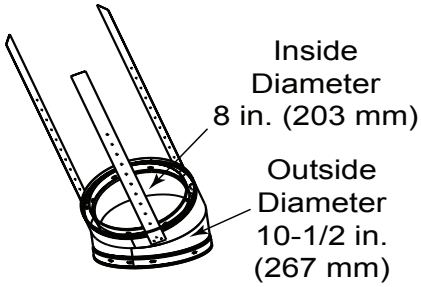

SL315 Chimney Offset/Return - Effective Height 13-3/8in. (380 mm)
SL330 Chimney Offset/Return - Effective Height 15-1/2in. (394 mm)

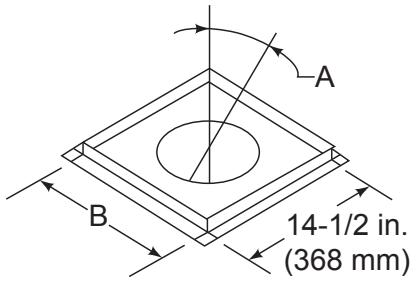

Ceiling Firestop

Catalog #	A	B	
FS338	0-deg.	14-1/2 in.	368 mm
FS339	15-deg.	18-3/8 in.	467 mm
FS340	30-deg.	23 in.	584 mm

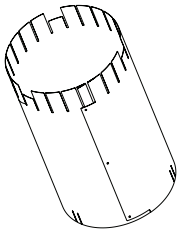

Assembled
Diameter: 14 1/2 in./368 mm
Height: 24 in./610 mm

AS8 Straight Attic Insulation Shield

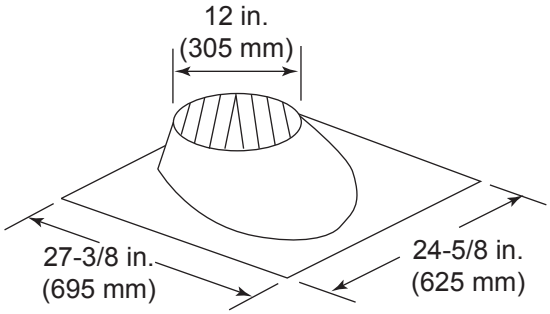

RF370 Roof Flashing

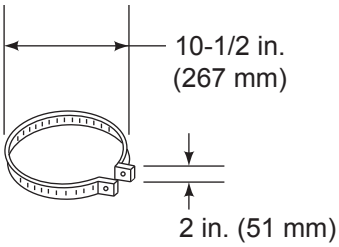

JB877 Chimney Joint Band

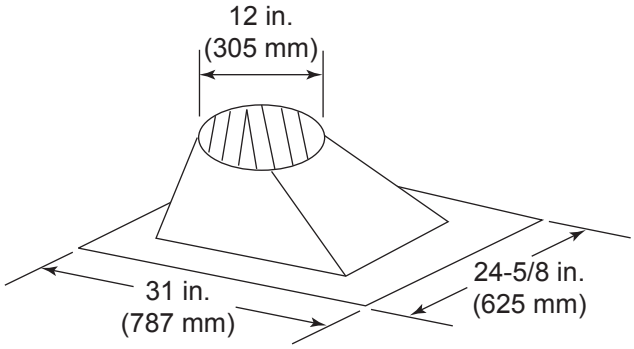

RF371 Roof Flashing

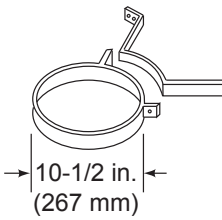

CB876 Chimney Joint Band

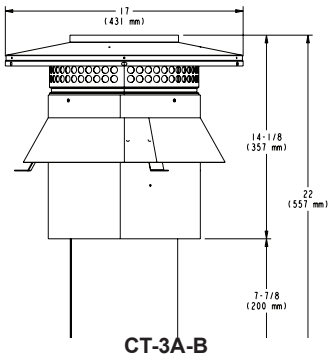

CT-3A-B

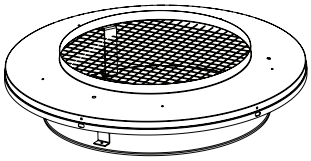

TR-TVK
TR Top Vent Kit

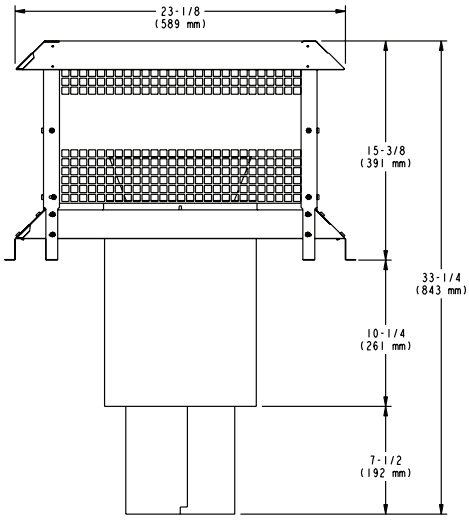

ST375 Square Termination Cap

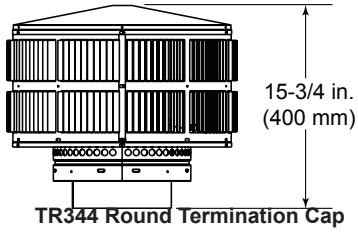

TR344 Round Termination Cap

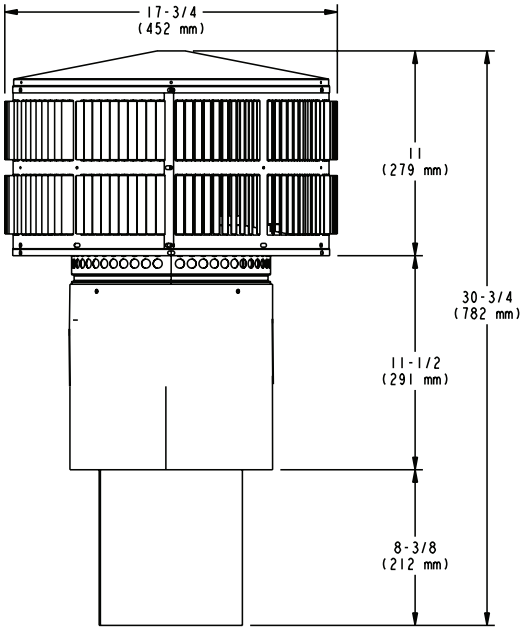

TR342-B Round Telescoping Termination Cap

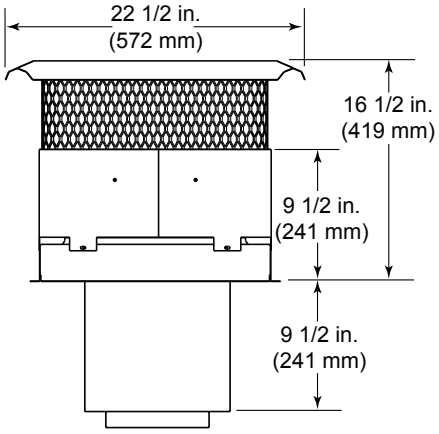

TCT375 Terra Cotta Cap

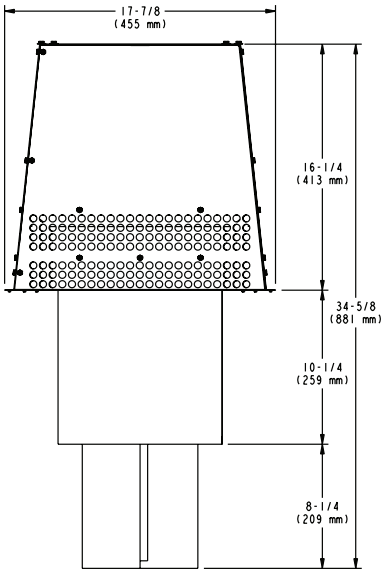

TS345/TS345P Square Termination Cap

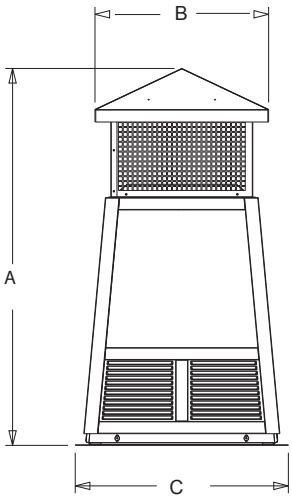

DTS134/DTS146

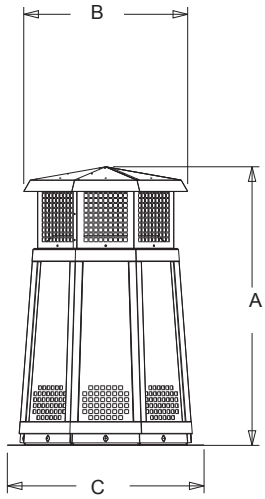

DTO134/DTO146 Decorative Caps

DTO134		A	B	C
	in	34	20	24
	mm	864	508	610
DTO146				
	in	46	22.7	26
	mm	1168	576	660

DTS134		A	B	C
	in	34	21.18	24
	mm	864	538	610
DTS146				
	in	46	21.18	26
	mm	1168	538	660

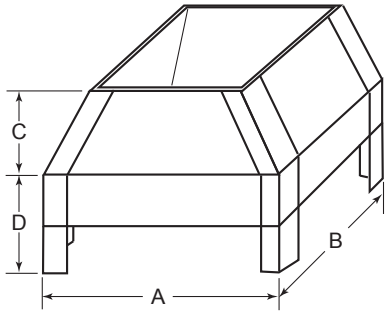

LDS33/LDS46 Decorative Shroud

Catalog #	A		B		C		D	
	in.	*mm*	*in.*	*mm*	*in.*	*mm*	*in.*	*mm*
LDS33	36	914	36	914	8.5	216	11	279
LDS46	48	1219	72	1829	8.5	216	11	279

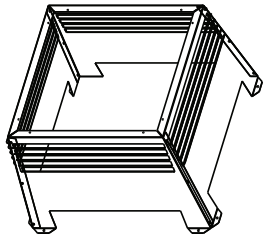

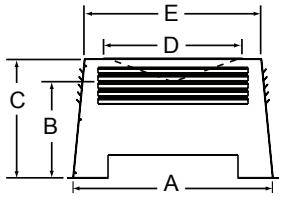

LDS-BV Decorative Shroud

Catalog #		A	B	C	D	E
LDS-BV	*in.*	26	12.5	15.5	22	23
	mm	660	318	394	533	584

D. Service Parts

outdoor lifestyles
by hearth & home technologies®

Service Parts **ODVILLA-36T-B, ODVILLA-36H-B**

36” Outdoor Woodburning Fireplace

Beginning Manufacturing Date: Sept 2022
Ending Manufacturing Date: Active

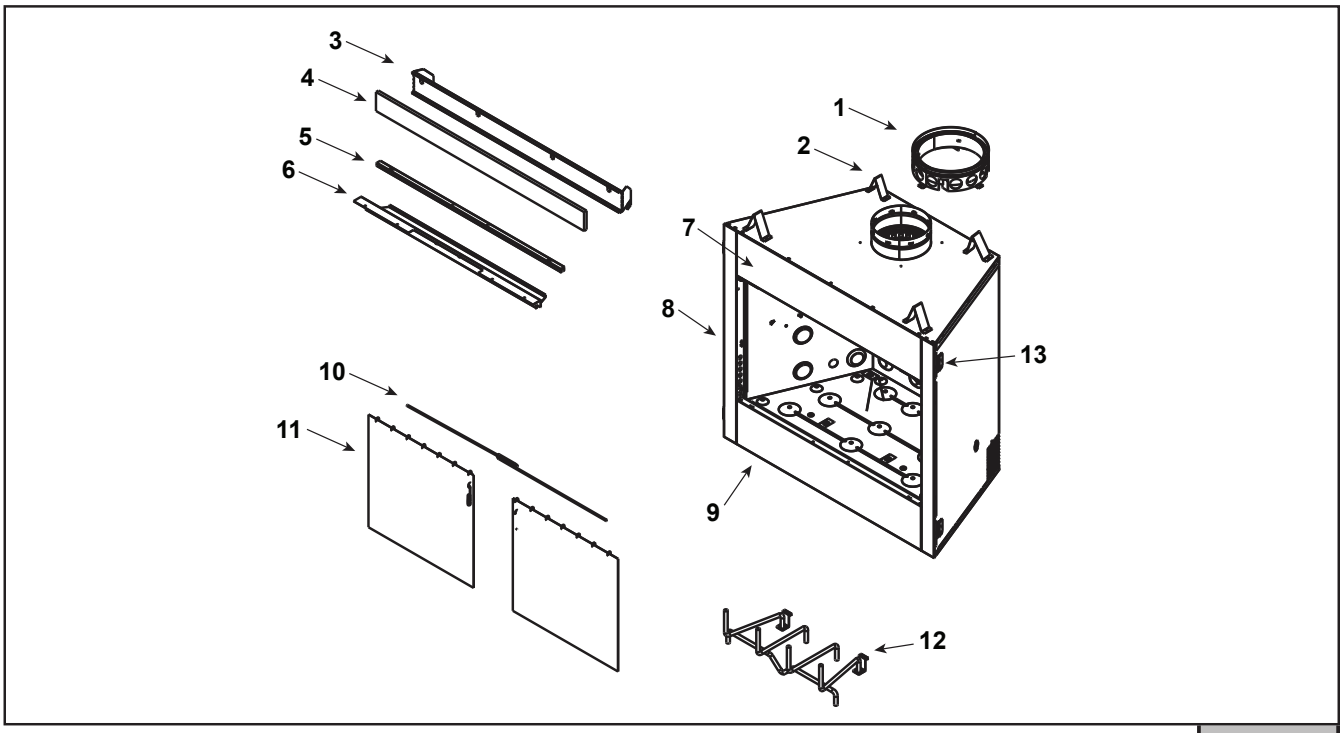

IMPORTANT: THIS IS DATED INFORMATION. Parts must be ordered from a dealer or distributor. **Hearth and Home Technologies does not sell directly to consumers**. Provide model number and serial number when requesting service parts from your dealer or distributor.

ITEM	DESCRIPTION	COMMENTS	PART NUMBER	Stocked at Depot
1	Starter Section Assembly		SRV22069	Y
2	Top Standoff	Qty 4 req	SRV4044-111	
3	Upper Front Face		4072-143	
4	Non Combustible Front		4072-146	
5	Door Track (used for upper)		SRV4072-117	
6	Smoke Shield		4072-135	
7	Upper Face	Overlay	SRV4072-188	
8	Left & Right Column	Overlay	SRV4072-176	
9	Lower Face	Overlay	SRV4072-178	
10	Firescreen Rod	1 piece	4072-133	
11	Firescreen Assembly	Qty 2 req	SRV4072-019	Y
12	Grate, 21.50” F x 9.88” D x 14.88” B		GR41	Y
13	Nailing Flange	Qty 4 req	SRV4044-161	
	Door Pivot Clip	Qty 2 req	SRV31527	
	Strip Protector		SRV18320	
	Outside Air Hood	Qty 2 req	SRV33271	
	Extended Smoke Shield		SRV4072-155	
	Installation Instructions and Owner’s Manual		4072-345	

Additional service parts following page.

5/23

#14 Traditional Refractory

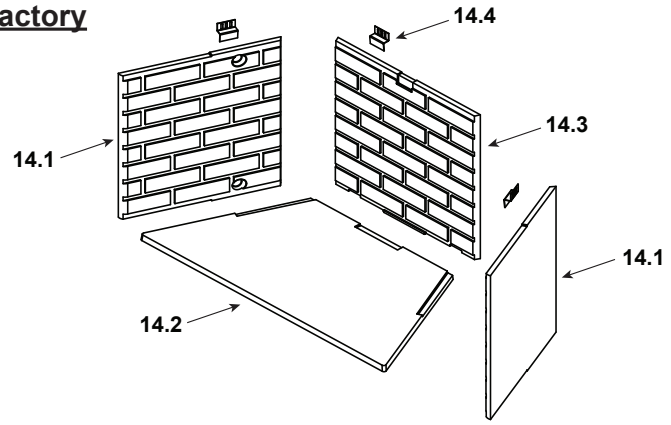

IMPORTANT: THIS IS DATED INFORMATION. Parts must be ordered from a dealer or distributor. **Hearth and Home Technologies does not sell directly to consumers**. Provide model number and serial number when requesting service parts from your dealer or distributor.

ITEM	DESCRIPTION	COMMENTS	PART NUMBER	Stocked at Depot
	Traditional Refractory			
14.1	Side Refractory, 19.43” H x 18.21” W	Qty 2 req	SRV4044-220	
14.2	Hearth Refractory, 35.85” F x 17.63” D x 20.91” B		SRV4072-340	
14.3	Back Refractory, 19.44” H x 20.91” W		SRV4044-222	
14.4	Retainer	Qty 3 req	SRV11847	

#15 Herringbone Refractory

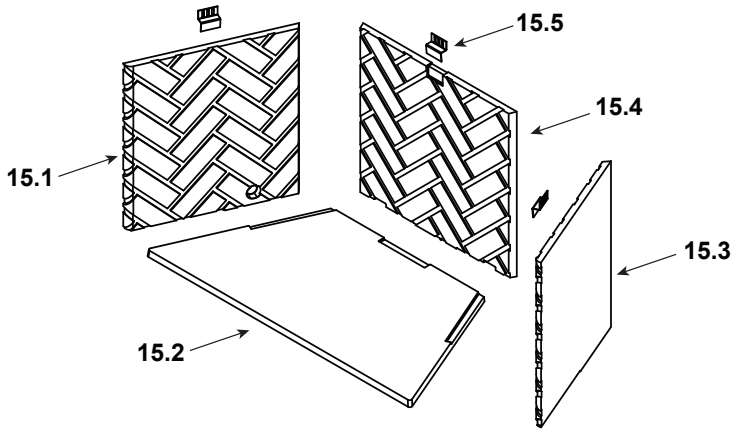

	Herringbone Refractory			
15.1	Side Refractory, Left 19.43” H x 18.21” W		SRV4048-205	
15.2	Hearth Refractory, 35.85” F x 17.63” D x 20.91” B		SRV4072-340	
15.3	Side Refractory, Right 19.43” H x 18.21” W		SRV4048-204	
15.4	Back Refractory, 19.44” H x 20.91” W		SRV4048-202	
15.5	Retainer	Qty 3 req	SRV11847	

Service Parts ODVILLA-42T-B, ODVILLA-42H-B

42” Outdoor Woodburning Fireplace

Beginning Manufacturing Date: Sept 2022
Ending Manufacturing Date: Active

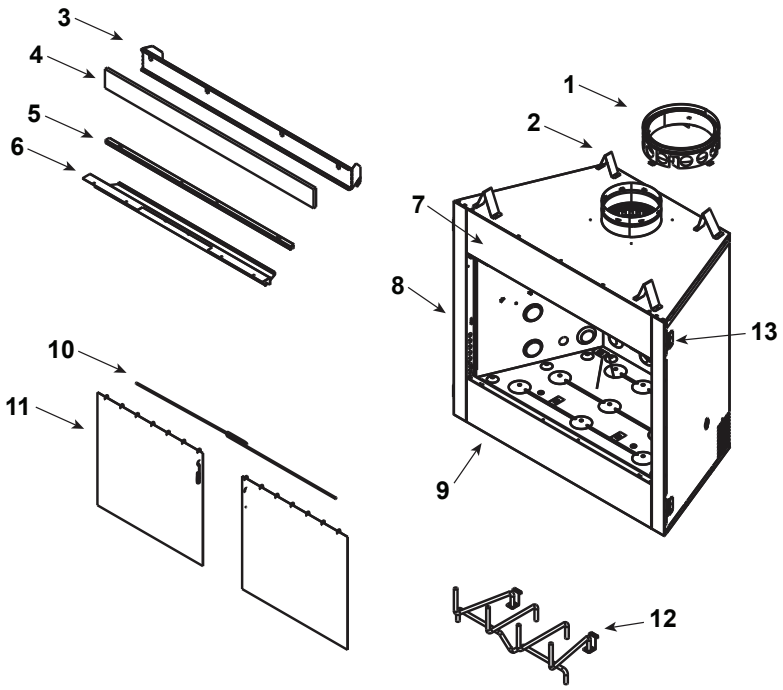

IMPORTANT: THIS IS DATED INFORMATION. Parts must be ordered from a dealer or distributor. **Hearth and Home Technologies does not sell directly to consumers**. Provide model number and serial number when requesting service parts from your dealer or distributor.

ITEM	DESCRIPTION	COMMENTS	PART NUMBER	Stocked at Depot
1	Starter Section Assembly		SRV22069	Y
2	Top Standoff	Qty 4 req	SRV4044-111	
3	Upper Front Face		4072-144	
4	Non Combustible Front		4072-147	
5	Door Track (used for upper)		SRV4072-118	
6	Smoke Shield		4072-136	
7	Upper Face	Overlay	SRV4072-199	
8	Left & Right Column	Overlay	SRV4072-176	
9	Lower Face	Overlay	SRV4072-169	
10	Firescreen Rod	1 piece	4072-134	
11	Firescreen Assembly	Qty 2 req	SRV4072-020	Y
12	Grate, 21.50” F x 9.88” D x 20.88” B		GR40	Y
13	Nailing Flange	Qty 4 req	SRV4044-161	
	Door Pivot Clip	Qty 2 req	SRV31527	
	Strip Protector		SRV18320	
	Outside Air Hood	Qty 2 req	SRV33271	Y
	Extended Smoke Shield		SRV4072-156	
	Installation Instructions and Owner’s Manual		4072-345	

Additional service parts following page.

5/23

#14 Traditional Refractory

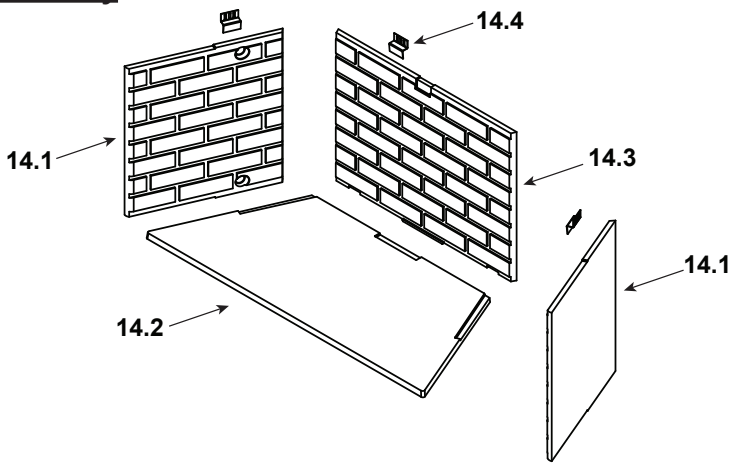

IMPORTANT: THIS IS DATED INFORMATION. Parts must be ordered from a dealer or distributor. **Hearth and Home Technologies does not sell directly to consumers**. Provide model number and serial number when requesting service parts from your dealer or distributor.

ITEM	DESCRIPTION	COMMENTS	PART NUMBER	Stocked at Depot
	Traditional Refractory			
14.1	Side Refractory, 19.43” H x 17.86” W	Qty 2 req	SRV4044-220	
14.2	Hearth Refractory, 41.85” x 17.63” D x 26.91” B		SRV4072-341	
14.3	Back Refractory, 19.44” H x 26.91” W		SRV4044-224	
14.4	Retainer	Qty 3 req	SRV11847	

#15 Herringbone Refractory

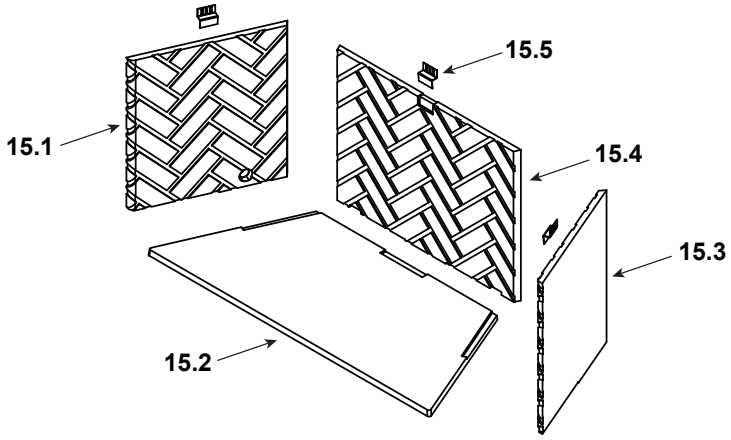

	Herringbone Refractory			
15.1	Side Refractory, Left 19.43” H x 18.21” W		SRV4048-205	
15.2	Hearth Refractory, 41.85” x 17.63” D x 26.91” B		SRV4072-341	
15.3	Side Refractory, Right 19.43” H x 18.21” W		SRV4048-204	
15.4	Back Refractory, 19.44” H x 26.91” W		SRV4048-203	
15.5	Retainer	Qty 3 req	SRV11847	

E. Contact Information

outdoor lifestyles
by hearth & home technologies®

Please contact your Outdoor Lifestyles dealer with any questions or concerns.

For the number of your nearest Outdoor Lifestyles dealer, please visit www.hearthnhome.com.

– NOTES –

CAUTION

DO NOT DISCARD THIS MANUAL

- Important operating and maintenance instructions included.
- Read, understand and follow these instructions for safe installation and operation.
- Leave this manual with party responsible for use and operation.

DO NOT DISCARD