

Our Place®

Wonder Oven® Pro User Manual

Air Fryer Oven APL.LWP.ESN | 120V 60Hz 1700W

Wonder Awaits

The Wonder Oven® Pro is the all-in-one countertop appliance designed for easier air frying, baking, roasting, dehydrating, and more. With a user-friendly digital touchscreen and features you won't find on other air fryers and toaster ovens (like steam infusion), it is essentially a sous-chef that never leaves its station. From wings to breads to desserts to roasted sides and beyond, home cooking just got a whole lot simpler.

⚠ IMPORTANT

SAVE THESE INSTRUCTIONS

Please read and keep these instructions handy. These instructions will help you learn to use your Wonder Oven properly and thoroughly so that you can achieve consistent, professional results.

FOR HOUSEHOLD USE ONLY. NOT INTENDED FOR COMMERCIAL USE.

Contents

Important Safeguards	1
Special Cord Instructions	5
Safety Precautions	6
Installation Precautions	11
Parts and Accessories	12
Using the Control Panel	16
Before Your First Use	20
Instructions for Use	21
Care and Cleaning	23
Helpful Tips	24
Replacement Parts	30
Troubleshooting	31
Warranty	34

DO NOT USE THE APPLIANCE FOR ANY PURPOSE OTHER THAN THOSE RECOMMENDED IN THIS INSTRUCTION MANUAL AND BY OUR PLACE

SAVE THESE INSTRUCTIONS.

FOR HOUSEHOLD USE ONLY. NOT INTENDED FOR COMMERCIAL USE.

IMPORTANT SAFEGUARDS

When using electrical appliances, especially when children are present, basic safety precautions should always be followed, including the following:

⚠ WARNING

Read all instructions carefully and thoroughly before first use.

1. To eliminate choking hazards for young children, remove and safely discard any packing materials before using the appliance for the first time.
2. Take inventory of all contents to ensure you have all parts needed to properly and safely operate your appliance.
3. **Unplug appliance from outlet when not in use and before cleaning. Allow to cool before cleaning or handling, and putting on or taking off parts.**
4. Keep the appliance and its cord out of reach of children. **DO NOT** allow the appliance to be used by children or individuals with certain disabilities. Close supervision is necessary when the appliance is used by or near children.
5. **DO NOT** touch hot surfaces. Appliance surfaces, including the door and outer surface of the appliance, are hot during and after operation.
6. Use caution when inserting or removing anything from the appliance, especially when hot. To prevent burns or personal injury, always use protective heat pads or insulated oven mitts, or use handles and knobs where available, when inserting, removing, or handling items from the appliance. Alternatively, allow the appliance to cool down before handling.
7. To avoid the possibility of fire, **NEVER** leave the appliance unattended while cooking. Be sure to turn off the power by pressing the power button and unplug the power cord when you leave the appliance unattended.
8. **DO NOT** rest cooking utensils or baking dishes on glass door.
9. **DO NOT** place hands inside the appliance during operation.

SAVE THESE INSTRUCTIONS.

FOR HOUSEHOLD USE ONLY. NOT INTENDED FOR COMMERCIAL USE.

10. **DO NOT** use outdoors. **DO NOT** use in moving vehicles or boats.
11. **DO NOT** put oversized foods or metal utensils in the appliance. Doing so may cause fire or electric shock.
12. When using this appliance, provide adequate space (at least 1 inch above and on all sides) for air circulation. **DO NOT** place anything underneath the appliance that would restrict airflow.
13. A fire may occur if the appliance is covered or touching flammable materials, including curtains, draperies, walls, etc. when in operation.
14. **DO NOT** use appliance for other than intended use.
15. Extreme caution should be exercised when using containers constructed of materials other than metal or glass.
16. **DO NOT** store any materials, other than manufacturers recommended accessories, in this oven when not in use.
17. **DO NOT** spray any type of aerosol spray or flavoring inside the appliance while cooking.
18. Extreme caution must be used when moving an appliance containing hot oil or other hot liquids.
19. **DO NOT** cover the crumb tray or any part of the appliance with metal foil. Doing so may cause the appliance to overheat or cause a fire.
20. **DO NOT** use the appliance with the crumb tray incorrectly installed. Crumb tray MUST be placed below lower heating elements. **DO NOT** slide into any rack positions.
21. To protect against fire, electric shock, or injury, **DO NOT** immerse the cord, plug, or appliance in water or other liquids. **DO NOT** splash water on the appliance.
22. **DO NOT** use the appliance with damage to the power cord or plug. Regularly inspect the appliance and power cord. If the appliance malfunctions or has been damaged in any way, immediately stop use and email hello@fromourplace.com.
23. **DO NOT** allow electrical power cords other than the one supplied with the appliance to come in contact with the appliance.

SAVE THESE INSTRUCTIONS.

FOR HOUSEHOLD USE ONLY. NOT INTENDED FOR COMMERCIAL USE.

24. Never use an outlet below counter level. **DO NOT** let the cord hang over the edge of a table or counter, or touch hot surfaces.

25. **DO NOT** place the appliance on top of or near other equipment, such as a microwave oven. Heat from the other item may cause malfunction, or the heat and steam from the appliance may cause the other item to malfunction or overheat.

26. **DO NOT** place any other equipment or accessories on top of the appliance. Heat and steam from the appliance may cause the other items to malfunction or overheat.

27. Intended for countertop use only. **DO NOT** place the appliance near the edge of a countertop, on or near a hot gas or electric burner, or in a heated oven. Ensure the surface is level, clean, and dry.

28. Before placing any accessories into the appliance, ensure they are clean and dry.

29. **DO NOT** place any of the following materials in the appliance: flammable items (paper, cardboard, plastic, wood, etc.) or any items other than food or Our Place supplied accessories.

30. **DO NOT** operate your appliance in an appliance garage or under a wall cabinet. When storing in an appliance garage, always unplug the unit from the electrical outlet. Not doing so could create a risk of fire, especially if the appliance touches the walls of the garage or the door touches the unit as it closes.

31. Strictly follow the Care and Cleaning instructions on pg. 23. **DO NOT** clean with metal scouring pads. Pieces of the pad can break off and touch electrical parts, creating a risk of electric shock.

32. **DO NOT** attempt to dislodge food when the appliance is plugged into the electrical outlet.

33. For any maintenance questions other than cleaning, email hello@fromourplace.com.

34. To disconnect, press stop if during an active MODE and power button to turn OFF, then remove the plug from the wall outlet.

35. **DO NOT** use the appliance as a source of heat or for drying.

SAVE THESE INSTRUCTIONS.

FOR HOUSEHOLD USE ONLY. NOT INTENDED FOR COMMERCIAL USE.

36. Outlet voltages can vary, affecting the performance of your product. To prevent possible illness, use a thermometer to check that your food is cooked to the temperatures recommended.

37. A short power-supply cord (or detachable power-supply cord) is provided to reduce the risk resulting from becoming entangled in or tripping over a longer cord. Longer detachable power-supply cords or extension cords are available and may be used if care is exercised in their use. If a longer detachable power-supply cord or extension cord is used:
    I. The marked electrical rating of the cord set or extension cord should be at least as great as the electrical rating of the appliance;
    II. The cord should be arranged so that it will not drape over the countertop or tabletop where it can be pulled on by children or tripped over unintentionally.

38. **DO NOT** operate any appliance with a damaged cord or plug or after the appliance malfunctions or as been damaged in any manner. Return appliance to the nearest authorized service facility for examination, repair, or adjustment.

39. The use of accessory attachments not recommended by the appliance manufacturer may cause injuries.

40. Always attach plug to appliance first, then plug cord into the wall outlet. To disconnect, turn any control to “off”, then remove plug from wall outlet.

41. Extreme caution should be exercised when using containers constructed of other than metal or glass.

42. **DO NOT** store any materials, other than manufacturers recommended accessories, in this oven when not in use.

Lightbulb

WARNING: To reduce the risk of FIRE, ELECTRIC SHOCK, EXPOSURE TO EXCESSIVE UV RADIATION, OR INJURY TO PERSONS:

1. **ALWAYS** unplug the oven and let all parts (including the bulb housing, glass cover and enclosure) cool completely before replacing bulb.
2. Only use a 25W maximum, 120V, Type G9 oven bulb with UV filter.
3. **ALWAYS** use a soft cloth when handling the bulb and do not directly touch the surface as oil from your skin can damage the bulb.
4. **DO NOT** look directly at a glowing bulb.
5. Keep bulb away from materials that may burn.
6. The bulb gets hot quickly. Only ever use the light button to turn on the light.
7. **DO NOT** operate the light if the bulb housing, glass cover, UV filter or enclosure are missing or damaged.

Special Cord Instructions

A short power-supply cord is provided to reduce the risks of children grabbing the cord or becoming entangled in or tripping over a longer cord. **DO NOT** use an extension cord.

About the Plug

This appliance has a polarized plug (one blade is wider than the other). To reduce the risk of electric shock, this plug is intended to fit into a polarized outlet only one way. If the plug does not fit fully in the outlet, reverse the plug. If it still does not fit, contact a qualified electrician. **DO NOT** attempt to modify the plug in any way.

Safety Precautions

These symbols indicate the degree of harm or damage that may be caused by improper use.

WARNING Indicates **actions that may cause death or serious injury.**

CAUTION Indicates **actions that may cause minor injury.**

NOTICE Indicates **a property damage.**

These symbols indicate requirements during use of the appliance.

Indicates **prohibitied** actions that must not be performed.

Indicates **required** actions that must be performed.

Indicates **risk of electric shock.**

Indicates **risk of scalding or burns.**

Indicates **general risk.**

WARNING

This appliance is not intended for use by persons (including children) with reduced physical, sensory, or mental capabilities, or lack of experience and knowledge, unless they have been given supervision or instruction concerning use of the appliance by a person responsible for their safety. Children should be supervised to ensure that they do not play with the appliance. Doing so may cause scalding (or burns), injury, or electric shock.

DO NOT disassemble, repair, or modify this appliance. Doing so may cause malfunction or fire. For repair, please contact hello@fromourplace.com.

DO NOT place the appliance on flammable surfaces such as wooden counters, wood flooring, or carpet. Doing so may cause a fire.

DO NOT submerge the appliance in water. Do not splash water on the appliance. Doing so may cause a short circuit or electric shock.



DO NOT put anything other than water in the water inlet. Adding oil, seasonings, or food may cause electric shock or fire.

DO NOT add more than 25 mL (5 teaspoons) of water to the water inlet at one time. DO NOT pour water anywhere other than into the water inlet. Doing so may cause water to spill, causing malfunction, scalding, or electric shock.

DO NOT put oil in the bake pan. Doing so may cause a fire.

DO NOT insert or remove the power plug with wet hands. Doing so may cause electric shock.

DO NOT use the appliance in any countries other than the U.S. and Canada. Doing so may cause fire or malfunction.

DO NOT apply pressure on the power cord. DO NOT do any of the following, as these may cause the power cord to overheat and catch fire: scratch, modify, bend, pull, step on, twist, or place the cord near heating devices. **DO NOT** place heavy items on the cord or use while it is bundled.

DO NOT use the appliance for any purpose other than those recommended in this instruction manual and by Our Place. Doing so may cause accidents such as fire or electric shock. Our Place accepts no responsibility in case of improper use or failure to follow these instructions.

If smoke or fire appears during cooking, DO NOT open the door until the flames go out and DO NOT attempt to extinguish with water. Doing so may cause the glass to shatter or the fire to spread. Instead, turn the appliance off if safe to do so and then unplug the power cord.

DO NOT block or insert anything into the air vents (the sides and underneath the door, and the bottom back side of the main unit) or cover the appliance while it is in use. Doing so may cause burns, fire, or malfunction.

DO NOT insert food that touches the top heating element. Doing so may cause fire.

Use caution with parchment paper, baking paper, or paper baking cups in the appliance. They should not come in contact with the heating elements. **DO NOT use plastic or silicone containers.** Doing so may cause fire.

DO NOT use the appliance with food residue in the crumb tray. It may carbonize and catch fire.

DO NOT connect the appliance to an external timer or separate remote-control system. The appliance is not intended to be used with an external timer or separate remote-control system.

In the event of an abnormality or malfunction, stop using the appliance immediately. Failure to do so may cause fire, electric shock, or injury. In the event of an abnormality or malfunction, please contact hello@fromourplace.com.

Examples of abnormalities and malfunctions:

I. The power does not turn off.

II. The power cord and power plug are unusually hot.

III. The appliance is deformed or unusually hot.

IV. The appliance falls or tips over.

V. The power cord is broken or stops powering the appliance when touched.

VI. The appliance is hot when it is not in use.

VII. The heater tube is cracked.

Use an outlet that meets the appliance rating (1700 W). DO NOT plug other electrical devices into the outlet when using the appliance. Using the appliance with an outlet that does not meet the appliance rating, or on a shared outlet with other devices, may cause overheating, resulting in fire.

Clean the power plug regularly. Dust accumulated on the power plug may cause condensation, which can damage the cable and cause fire. Unplug power plug from outlet and wipe it with a dry cloth.

Be sure to clean the appliance after use. Failure to do so may cause food residue left inside the appliance to carbonize, causing fire and smoke.

When unplugging the appliance, pull on the plug rather than the cord. Failure to do so may cause fire due to electric shock or short circuit.

Caution

Stay near the appliance while operating. Failure to do so may cause fire. Be sure to turn the power off before leaving the appliance.

DO NOT touch any parts except the handle, dial, power button, or touch screen control panel during or immediately after operation. Doing so may cause burns, as the appliance becomes hot during cooking.

DO NOT cook for longer than necessary. Failure to do so may cause fire.

DO NOT heat more than necessary. Overheating may cause the food to catch fire.

DO NOT apply excessive force to the glass window or allow it to become wet. The glass may break, causing injury.

DO NOT cook with the door open. Doing so may cause scalding or injury.

DO NOT heat canned or bottled foods directly. Doing so may cause scalding, burns, or injury due to bursting or deformation.

Always use a heat-proof dish when cooking any foods. Be sure to place the food on a heat-proof dish or a sheet of aluminum foil to prevent food or oil from falling onto the heating elements and causing fire. Wash accessories after each use.

DO NOT use containers made of materials other than heat-proof metal or glass. If using ceramic or glass pans or dishes, it is important that they are oven safe to prevent cracking.

When using aluminum foil, make sure that it does not touch the heater tube. The aluminum foil may melt and adhere to the heater tube, resulting in malfunction, electric shock, or fire.

DO NOT use lids in the appliance. Pressure build up in a covered pan or dish may cause hot ingredients to expel or the dish to crack.

When taking out food or containers, use tongs or pot holders. Failure to do so may cause burns.

Be sure to power off the appliance by pressing the stop button if still operating, and press the power button to turn the unit off when removing food from the appliance. Failure to do so may cause burns.

Use the Our Place-provided wire rack, bake pan, or air fryer/ dehydrator basket. Caution should be exercised when using other pans or dishes not provided by Our Place and may lead to injuries or accidents.

DO NOT bake bread with butter or jam. There is a chance the bread will catch fire.

Be sure to insert the crumb tray under the bottom heating element at all times. Failure to do so may cause malfunction.

FCC Statement

Changes or modifications not expressly approved by the party responsible for compliance could void the user's authority to operate the equipment.

This equipment has been tested and found to comply with the limits for a Class B digital device, pursuant to Part 15 of the FCC Rules. These limits are designed to provide reasonable protection against harmful interference in a residential installation. This equipment generates, uses and can radiate radio frequency energy and, if not installed and used in accordance with the instructions, may cause harmful interference to radio communications. However, there is no guarantee that interference will not occur in a particular installation.

If this equipment does cause harmful interference to radio or television reception, which can be determined by turning the equipment off and on, the user is encouraged to try to correct the interference by one or more of the following measures:

- Reorient or relocate the receiving antenna.
- Increase the separation between the equipment and receiver.
- Connect the equipment into an outlet on a circuit different from that to which the receiver is connected.
- Consult the dealer or an experienced radio/TV technician for help.

This device complies with Part 15 of the FCC Rules. Operation is subject to the following two conditions: (1) this device may not cause harmful interference, and (2) this device must accept any interference received, including interference that may cause undesired operation.

Lagom Kitchen Company d/b/a Our Place
2251 Barry Ave. Los Angeles, CA 90064
Tel: +1 (310) 620-1206

INSTALLATION PRECAUTIONS

WARNING

DO NOT place objects or accessories on top of, underneath, next to, inside, or in gaps around the appliance. Doing so may cause smoke, fire, or burns.

DO NOT install the appliance in a location which may be affected by heat or in enclosed areas. Doing so may cause fire.

Place the appliance on a flat, stable surface. Otherwise, the door may open during operation. This may cause water to spill, causing electric shock. It may also cause the appliance to tip over.

Install the appliance with clearances to the top, left, right, and rear as illustrated below. If the wall is made of heat-sensitive material such as plastic, leave more space around the appliance. Heat and steam may build up, causing malfunction, fire, or discoloration/deformation of the surrounding walls.

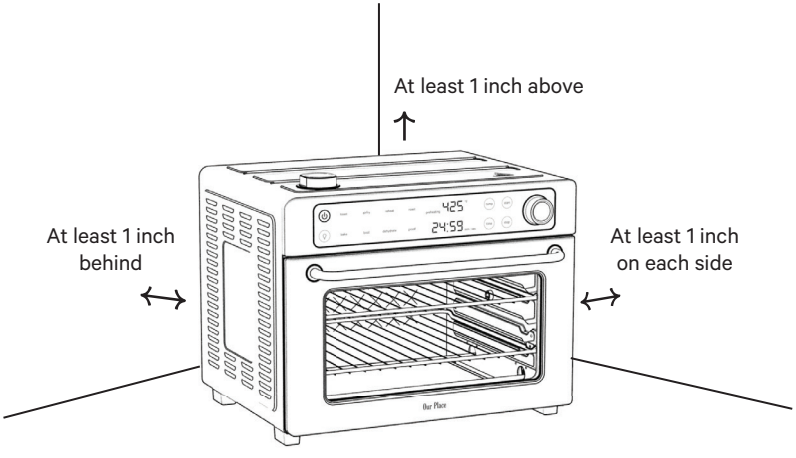

Parts & Accessories

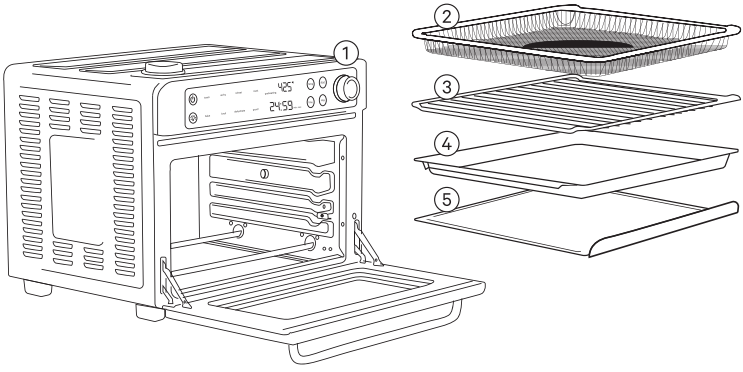

Crumb tray should always be slotted in beneath the heating elements, and should not be inserted into any other rack position.

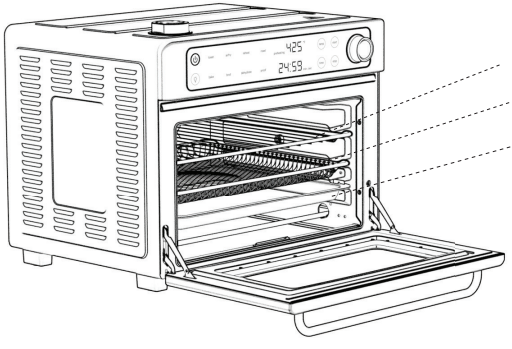

1. Wonder Oven Pro	4. Bake Pan
2. Air Fryer/Dehydrator Basket	5. Crumb Tray
3. Wire Rack	*Attached power cord not shown

1. **Wonder Oven Pro**

2. **Air Fryer/Dehydrator Basket**
   The air fryer basket features a grated design to allow optimal airflow for even cooking. It should be placed on either the middle or top rack (positions 2 or 3). When using the air fryer basket, position the bake pan on a lower rack (positions 1 or 2) to catch drips when air frying any foods that are extra greasy or saucy.

3. **Wire Rack**
   The wire rack is compatible with rack positions 1, 2, and 3 (bottom, middle, and top). Food may be placed directly onto the wire rack. When using the Toast function, do not position the air fryer basket or bake pan beneath the wire rack. If cooking foods that produce grease drippings, place the bake pan underneath the wire rack to catch any residue.

4. **Bake Pan**
   The bake pan is suitable for use in rack positions 1, 2, and 3. When air frying foods that are greasy and saucy, it is recommended to place the bake pan below the air fryer basket, as it functions as a drip tray.

5. **Crumb Tray**
   The removable crumb tray must always be positioned beneath the bottom heating element when operating the appliance. The appliance should never be used without the crumb tray in place. **DO NOT** insert the crumb tray into any rack positions.

Tips & Tricks

The Wonder Oven Pro preheats and cooks faster than a conventional oven, which may require adjustments to cooking times and temperatures.

For optimal results, use the middle rack (position 2) and monitor your food, turning as needed.

When cooking on multiple rack levels, periodically check the food and rotate trays, baskets, or racks to ensure even cooking.

Tip: For crispier results, use the top rack (position 3).

Each mode is preset with times and temperatures for ease and speed to get cooking. For example, Toast has been optimized for an evenly crisp exterior and soft interior. These are suggestions only and can be adjusted accordingly to preferences and recipes.

Air Fryer Basket

Can be used in positions 2 and 3

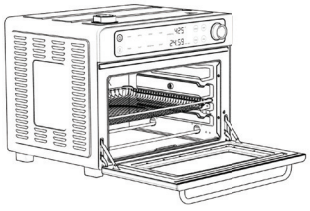

Position 2 (Middle)

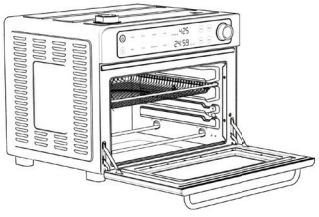

Position 3 (Top)

Bake Pan

Can be used in all positions

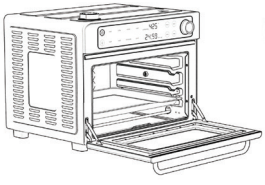

Position 1 (Bottom)

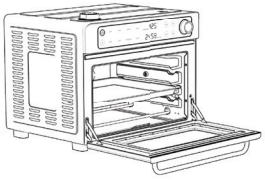

Position 2 (Middle)

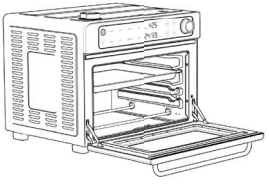

Position 3 (Top)

Wire Rack

Can be used in all positions

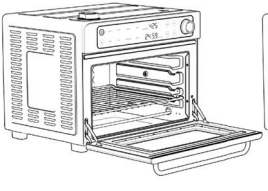

Position 1 (Bottom)

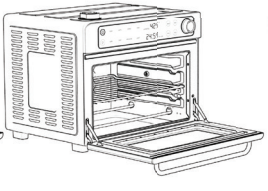

Position 2 (Middle)

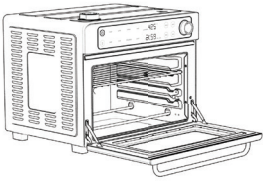

Position 3 (Top)

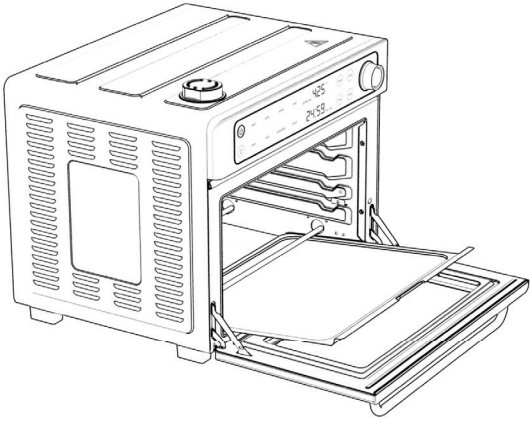

Crumb Tray goes under the heating element

Using the Control Panel

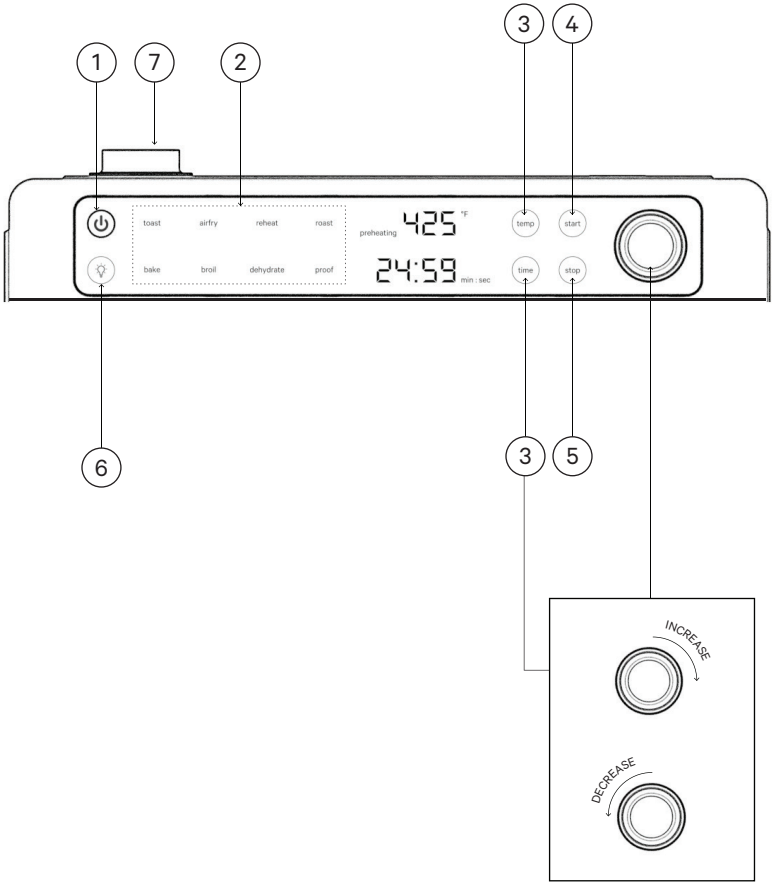

Using the Control Panel

1. **ON/OFF Power Button:** Use to turn the appliance on or off.
    - **ON:** When powered on, the touch screen panel activates, displaying available modes. The fan will run during active functions, and a chime will sound to confirm startup.
    - **OFF:** When powered off, the touch screen panel is inactive, the fan is not operational, and the indicator light remains off. A chime will sound to confirm shutdown.
2. **MODE Touch Screen Panel:** Use to select your cooking mode: air fry, broil, roast, bake, toast, reheat, proof, or dehydrate.
3. **TEMP/TIME Buttons:** Use to activate time and temperature settings
    - **TEMP/TIME dial:** Use to adjust time and temperature.
    - **TEMP Button:** Press and hold the Temperature button for 3 seconds to switch between Fahrenheit and Celsius.
    - **TIME Button:** Press and hold the Time button for 3 seconds to put the oven in silent mode (no chimes will sound). Press and hold again for 3 seconds to take the oven out of silent mode.
4. **START Button:** Use to start cooking and activate the selected cooking mode.
5. **STOP Button:** Use to stop cooking and pause the selected cooking mode.
6. **LIGHT Button:** Use to turn light on and off. The light turns on automatically when the door is opened. It will turn off after 30 seconds once the door is closed.
7. **Water inlet:** The inlet lid also serves as a measuring cup. To use, remove the lid and flip it to the cup side. Measure up to 25 ml (5 teaspoons) of water, depending on the recipe. Carefully pour the water into the inlet, then securely replace the lid. Water should only be added to the inlet once the unit has preheated, otherwise steam will not activate.

Note: The water inlet's measuring cup is intentionally small. **DO NOT** exceed 25 ml (5 teaspoons) of water at a time. Only use water. **DO NOT** pour any other liquids into the inlet.

For more information, tips, and tricks about the Wonder Oven Pro's steam infusion function, please refer to the Helpful Tips section of this manual.

Guide for adding water:

Locate the water inlet:

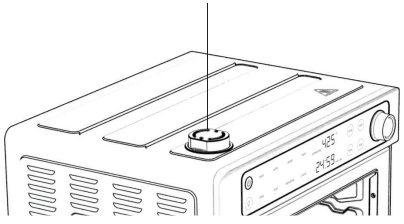

Turn the water inlet lid to remove

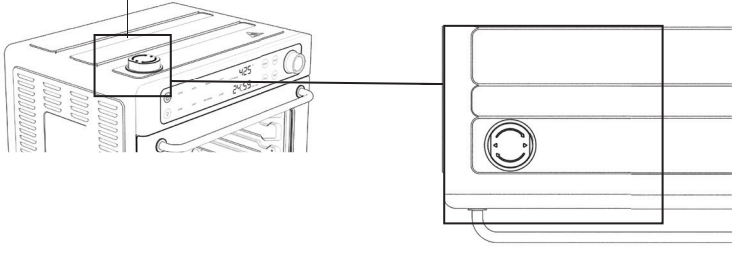

The lid doubles as a measuring cup. Measure your desired amount of water in the cup, pour into the inlet, and replace the lid. The cup fits up to 25mL (5 tsp) of water.

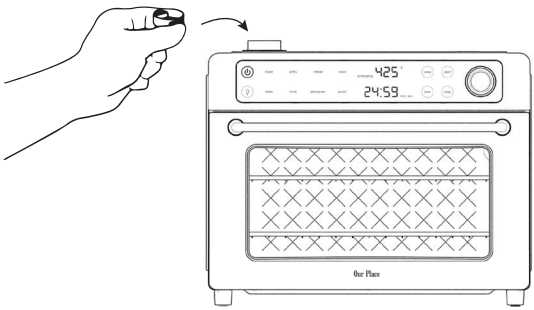

Before Your First Use

1. Remove all accessories from the package and read this manual carefully. Please pay close attention to operational instructions, warnings, and important safeguards to avoid any injury or property damage.
2. Hand wash the air fry basket, wire rack, bake pan, and crumb tray in warm, soapy water, then rinse and dry thoroughly, according to the Care and Cleaning section of this manual. **DO NOT** put the accessories in the dishwasher. Finishes may degrade. **NEVER** submerge the main unit in water.
3. Place the appliance on a flat, stable, and level surface.
4. Ensure that the oven is at least 1 inch away from the wall or any other objects.
5. We recommend performing a trial run of your appliance without food at 400° F (200°C) for 10 minutes on Bake mode.
6. Conduct the trial run in a well-ventilated area as a small amount of smoke and odor may be detected. This is normal and should be expected.
7. Always ensure that the removable crumb tray is placed underneath the bottom heating tubes, whenever the appliance is being used. **NEVER** operate the appliance without the crumb tray in place.

Instructions for Use

Follow these simple steps:

1. Unwind the power cord completely and insert the power plug into a grounded power outlet. The oven will chime and the display panel will illuminate to show power is flowing to the unit before shutting off.
2. Turn unit on by pressing the ON/OFF button. Cook modes will display on the touch screen panel.
3. The modes will automatically appear when the ON/OFF button is pressed.
4. Press TIME and/or TEMP to adjust TIME and/or TEMP. The screen is active and changeable when it is blinking.
5. Turn the dial knob to change the TIME and/or TEMP up or down.
6. Press START to activate the cooking mode and turn on the appliance's heating elements.
7. Depending on the selected mode, the appliance will engage in a preheating process. Preheating occurs automatically when using the following modes: Air Fry, Roast, Bake, Broil, and Reheat. In contrast, the Toast, Dehydrate, and Proof modes do not include a preheat phase.
8. Once preheating is complete, a chime will sound and the timer will start counting down.

   Optional: Add water to the inlet if using the steam infusion function. Ensure that the oven is fully heated before adding water, as adding water prematurely will not produce steam. The steam infusion function is available for use with the following modes: air fry, roast, bake, toast, reheat, and broil.
9. Select the appropriate accessory—bake pan, wire rack, or air fryer/dehydrator basket—based on your food preparation needs, and insert it into the desired rack position (1, 2, or 3). The timer will automatically pause when the door is opened and resume once the door is closed.
10. The light will automatically turn on when the oven door is opened and will turn off 30 seconds after the door is closed.
11. Press the light button to reactivate the light. It will remain illuminated until the button is pressed again or until the timer cycle is completed.
12. If the oven needs to be paused during operation, press the STOP button.

13. If the time and/or temperature needs adjustment during operation, press the respective button and turn the dial knob. The active button will blink to indicate selection. After approximately 3 seconds of inactivity, the blinking will cease and the new setting will be confirmed.

14. If a different mode is required during operation, press the STOP button, then select the new mode and adjust the time and/or temperature accordingly.

15. When the timer completes, a chime will sound, and the unit will enter standby mode. In standby, only the mode selection and light button remain active and visible on the touch screen.

16. If no activity is detected after 5 minutes, the unit will power off.

Care & Cleaning

- Clean the appliance and all accessories after every use.
- Before cleaning, unplug the power cord and allow the main unit to cool sufficiently.
- Wear thick gloves when cleaning. Failure to do so may cause injury to the hands or fingers.
- **DO NOT** place the oven body in a dishwasher. This can be a cause of warping, changing color, and corrosion.
- **DO NOT** use abrasive cleaners, as they will damage the finish. Simply wipe the exterior with a clean, damp cloth and dry thoroughly. Apply the cleaning agent to a cloth, not directly onto the appliance. **DO NOT** use excess pressure when cleaning the area of the control panel.
- To clean the interior walls and bottom of the oven, first remove all accessories, then use a damp, soapy cloth or sponge. **NEVER** use harsh abrasives or corrosive products, including oven cleaner sprays. These could damage the oven surface. **NEVER** use steel wool pads on the appliance or accessories.
- Before cleaning the heating elements, make sure the unit is powered off and unplugged. Use a water dampened cloth or paper towel to wipe away any oil or burnt residue from the quartz heating elements. **DO NOT** remove protective wire cage/casing from around the heating elements. To clean under the heating element, remove the crumb tray before wiping underside with a damp cloth. Allow the unit to fully dry before powering on and using again.
- The wire rack, bake pan, air fry/dehydrator basket, and crumb tray should be hand washed in hot, soapy water, or use a nylon scouring pad or nylon brush, in order to maintain longevity. **DO NOT** put the accessories in the dishwasher. Finishes may degrade.
- Excess food particles can cause smoking and may be difficult to remove from the crumb tray. To remove baked-on grease or burnt food particles, soak the crumb tray in hot, soapy water or use non-abrasive cleaners.
- Clean the top interior of the appliance to remove any excess grease that may accumulate after cooking greasy foods. Follow the same cleaning procedures as outlined above for the exterior to help prevent smoking during subsequent uses.
- The crumb tray should be emptied frequently and hand-washed as needed.

Helpful Tips

Sounds
To activate silent mode, hold the TIME button down for 3 seconds. All oven operations will now be silent. To reactive sounds, simply press and hold TIME button down again for 3 seconds.

Timer

Once the unit is preheated, the timer will begin counting down.

For cooking times under one hour, the display shows the remaining time in minutes and seconds; for times exceeding one hour, it displays the time in hours and minutes.

To add time to the preset cooking duration, press the TIME button and adjust the dial accordingly.

Opening the door will pause the timer, and closing the door will resume it.

Each mode has a default time and temperature that can be modified by pressing the TIME or TEMP buttons and adjusting the dial.

Lights

Once preheated, the oven light will turn on automatically when the door is opened to place the food inside. The light will turn off after 30 seconds once the door is closed. The light will remain off for the entire duration of the timer. If the light button is pressed at any moment during the cooking cycle, the light will remain on until cooking is complete, unless the light button is pressed again to turn it off.

Preheat

Cooking Without Preheating (Toast, Dehydrate, and Proof):
- Place the food directly on the wire rack or in the included air fry/dehydrator basket or bake pan, ensuring it is centered in the oven.
- Close the oven door and press START; the timer will begin counting down.

Cooking With Preheating (Air Fry, Roast, Bake, Broil, and Reheat):
- Press START before placing any food in the oven.
- The oven will alert you, and the display will show “PREHEATING” as the unit heats up.
- Once preheating is complete, the oven will alert you again, the “PREHEATING” message will disappear, and the timer will begin counting down.

- At that time, place the food in the oven (directly on the wire rack or using the included air fry/dehydrator basket or bake pan), ensure it is centered, and close the door. The timer will continue counting down.

General Instructions

- For all settings, the cooking temperature and time can be adjusted during the cooking cycle.
- When the cooking cycle is complete, the oven will alert you and the display panel will return to standby mode.

Steam Infusion

The Wonder Oven Pro allows for steam infusion — a magical way to help meats stay juicy and tender, or to make breads and desserts that are extra light and fluffy.

The Wonder Oven Pro's steam infusion function creates a small amount of steam which locks in moisture and draws out delicious aroma and flavor. To use this function, first turn on your Wonder Oven Pro and set your mode, time and temperature. Once preheated, you can activate the steam. Simply remove the water inlet lid, flip it over to the cup side, measure a small amount of water, then carefully pour the water into the inlet and replace the lid. See next page for suggested water amounts based on food type.

Reminder: Only add water to the water inlet once the Wonder Oven Pro is heated — adding water prior to heating will not create steam.

Steam infusion suggestions:

FOOD	WATER AMOUNT	BENEFIT
Bread	3 tsp	Adds lightness & fluffiness
Steak	5 tsp	Keeps meat juicy & tender
Fish	5 tsp	Keeps fish moist
Chicken wings	5 tsp	Keeps chicken tender

Convection

The Wonder Oven Pro uses a convection fan to circulate air during the cooking process. The air circulation provides more even and consistent cooking. In many recipes, this also facilitates faster cooking, saving you time.

The convection fan is not active during bake mode.

Wonder Oven Pro Mode Overview

Mode	Suggested Rack Position	Presets	Convection Fan	Preheat	Temp & Time Range
TOAST	Middle	400°F 4 min	YES	NO	350°F - 450°F Up to 20 mins
AIR FRY	Top or Middle	450°F 14 min	YES	YES	250°F - 450°F Up to 4 hrs
REHEAT	Middle	350°F 15 min	YES	YES	175°F - 450°F Up to 2 hrs
ROAST	Bottom or Middle	450°F 25 min	YES	YES	175°F - 275°F Up to 12 hrs 280°F - 380°F Up to 8 hrs 385°F - 450°F Up to 4 hrs
BAKE	Bottom or Middle	400°F 40 min	NO	YES	175°F - 450°F Up to 4 hrs
BROIL	Top or Middle	450°F (HIGH) 10 min	YES	YES	350°F (LOW) 400°F (MEDIUM) 450°F (HIGH) Up to 30 mins
DEHYDRATE	Middle	120°F 12:00 hrs	YES	NO	85°F - 200°F Up to 24 hrs
PROOF	Bottom or Middle	80°F 1:00 hr	YES	NO	80°F - 100°F Up to 2 Hours

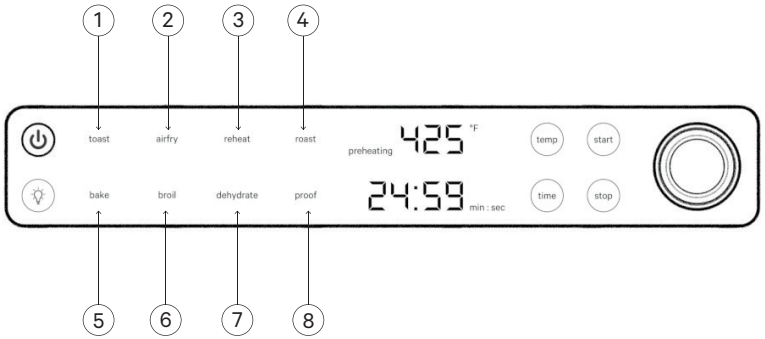

Cooking Modes

1. **Toast**
   - Looking to brown your breads, bagels, English muffins, croissants, and other baked goods? The Toast mode crisps up the outsides while keeping the insides soft and fluffy.

     Note: Both the top and bottom heating elements will be working, so you'll be toasting two sides at once.
2. **Air Fry**
   - With the combined power of intense heat and rapidly circulating air, the Air Fry function works well for just about any type of food. It results in that crunchy, fried texture we all love without the use of extra oils. (Think: crispy nuggets and snappy veggies.) If you can bake it but want a bit more bite, try the Air Fry setting.
3. **Reheat**
   - Use this function to heat up last night's leftovers. If your food is coming straight from the fridge, a temperature of 300°F — 325°F should get things toasty. Reheat times will vary.
   - You can also use Reheat like a warming lamp to keep already-cooked foods nice and temperate. We recommend setting the TEMP to 200°F and adding 5 mL (1 teaspoon) of water to the water inlet.
   - The Reheat mode should only be used for solid foods.

4. **Roast**
    - The heavy-hitting, higher-heating Roast mode is ideal for cooking a variety of denser meats and poultry.
    - For larger pieces of meat, we recommend using the bottom rack (position 1).
5. **Bake**
    - Ideal for cooking all types of food, the Bake setting evenly distributes heat from the bottom and up throughout the oven. This is the classic way to make cookies, breads, meats, and many frozen foods.
6. **Broil**
    - Broiling uses the top heating element to force heat directly down onto whatever is being cooked. It's ideal for adding a beautiful browned crust to a cheesy pasta dish, giving a unique depth of flavor to pineapple slices, or adding extra heat to thin cuts of meat.
    - For a high Broil, we recommend using the top rack (position 3).
    - For a low Broil, we recommend using the middle rack (position 2).
7. **Dehydrate**
    - The combination of maximized airflow and low, stable heat uniformly dries food without overheating or cooking.
    - Evenly arrange food in the included air fry/dehydrator basket. For best results, leave space between food pieces and arrange them in a single layer.
    - Use the included bake pan to catch drips when dehydrating foods that may drip, such as marinated jerky.
8. **Proof**
    - The controlled, low-temperature environment is perfect for proofing a variety of doughs, including bread, rolls, and pizza.
9. **Standby Mode**
    - The oven is in standby mode when the display panel turns off. Interacting with any of the controls will take the oven out of standby mode.
10. **Door Sensor**
    - The timer pauses and the light turns on when the door is opened during cooking. When the door is closed, the timer resumes, and the light remains on for 30 seconds before turning off.

Replacement Parts

Looking for Wonder Oven Pro recipes, an extra air fryer basket, bake pan and more? Scan this QR code for replacement parts. You can find recipes, FAQs and more there, too.

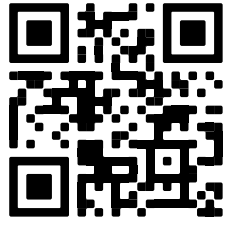

Troubleshooting

PROBLEM	PROBABLE CAUSE	
The display screen/ light has gone out.	1	The oven goes into standby mode if not used for 5 minutes
	2	To re-activate the oven out of standby mode, press the ON/OFF Power button on the control panel. The screen will re-illuminate.
The appliance will not turn on.	1	Make sure the oven is plugged in.
	2	Press the ON/OFF Power button.
Foods are not completely cooked.	1	Increase cooking TEMP or TIME.
Foods are over cooked or burned	1	Decrease cooking TEMP or TIME.
	2	Make sure foods are not so large that they touch the heating elements.
Foods are cooked unevenly.	1	Preheat the oven.
	2	Make sure foods are not placed too closely together onto bake pan, wire rack, or air fryer basket.
	3	If using the air fryer function, flip food halfway through cooking to prevent food from cooking too quickly.
Smoke or odor occurs.	1	Smoke or odor may occur when using this appliance for the first time. This will eventually disappear. Run an additional cycle without food as recommended on page 20.
	2	When the oven is cooking, excess oil or fatty foods may cause white smoke. Make sure the inside of the oven is cleaned properly and not greasy before use.

Troubleshooting

PROBLEM	PROBABLE CAUSE	
Steam comes out the door.	1	Steam from the boiler or white vapor from the moisture in the bread or frozen foods may come out of the door during cooking. This is normal. However, keep hands and face away from steam as it is very hot.
Noise from the control panel.	1	During cooking, a cooling fan turns on to protect sensitive electronic components from overheating. This fan can sometimes remain on for a few minutes after cooking has finished.
The light does not turn on when the light button is pressed.	1	Is the power turned off? ► Press the on/off power button. Press the light button.
	2	Is the power plug disconnected from the outlet? ► Insert the power plug securely into the outlet.
	3	Has the breaker tripped? ► Reset the tripped breaker.
The power does not turn off after 5 minutes without operation.	1	Possible malfunction. Contact Our Place at hello@fromourplace.com.
The door will not close.	1	Are the wire rack, bake pan, air fry/dehydrator basket, and/or crumb tray properly inserted? ► Refer to “Before Your First Use” (p. 20) and insert the accessories correctly.
	2	Is anything caught between the main unit and the door? ► Remove any such items.
When water is added, it makes a sizzling sound.	1	When water is added, it will make a sound as it evaporates inside the inlet, but this does not affect the cooking.

Troubleshooting

PROBLEM	PROBABLE CAUSE	
Water remains in the water inlet after use.	1	If water doesn't drain after use, the water inlet may be clogged, or the water inlet is bent. Contact Our Place at hello@fromourplace.com.
Water is dripping onto the counter from under the door.	1	This is normal. The condensation created from high moisture content foods such as frozen breads will run down the inside of the door and can drip onto the counter.
The screen displays 'E1'	1	Contact customer service at hello@fromourplace.com.
The screen displays 'E2'	1	Contact customer service at hello@fromourplace.com.
The screen displays 'E3'	1	Remove the plug from the power outlet, allow the oven to cool for 15 minutes, then plug back in. Contact customer service at hello@fromourplace.com if the message continues.
The screen displays 'E4'	1	Contact customer service at hello@fromourplace.com.
The screen displays 'E5'	1	Contact customer service at hello@fromourplace.com.

Warranty

We stand by our products. We want you to have the best experience with your Wonder Oven Pro®, so our team is here to help. Please contact us at hello@fromourplace.com if you have any questions regarding our warranty program or need advice on using your product. Lagom Kitchen Company, d/b/a "Our Place" ("Our Place", "we", or "our") offers a limited warranty for the Wonder Oven Pro if purchased and used in the United States or Canada, excluding Quebec. This Limited Warranty is made solely by Our Place and no other person or entity and is offered on the terms and conditions set forth in this Limited Warranty, also available on www.fromourplace.com/warranty.

What does this warranty cover?
This warranty covers defects in materials and workmanship for the Wonder Oven Pro® when used normally in accordance with Our Place's user manual.

What does this warranty not cover?

This warranty does not cover any damages due to:

- Use of the product not for regular household purposes
- Misuse, negligence or other abuse;
- Failure to follow the user manual (e.g. use, warning, maintenance, and care instruction);
- Normal wear and tear;
- Modifications to the product or use with products not approved by Our Place;
- Cosmetic blemishes, stains, discolorations and scratches;
- Glass parts and other accessory items that are packed with the unit;
- Installation with an incorrect electric current, voltage, circuit breaker rating, extension cord, or power supply;
- Damages or defects caused by service or repair of the product performed by an unauthorized service provider;
- Loss or damage in transit after initial delivery; and
- Accidents or other actions beyond our reasonable control.

Who is covered by this warranty?
This limited warranty covers the original retail consumer purchaser of a covered product or a consumer that receives the product new and unused as a gift from the original retail purchaser. This warranty is not transferable. Coverage terminates if a covered consumer sells or otherwise transfers the product. This limited warranty applies only to products purchased directly from Our Place or an Our Place authorized retailer. This limited warranty is not transferable.

How long does this warranty last?
The warranty period for the Wonder Oven Pro® is limited to one (1) year from the date of delivery to the purchaser.

Who can claim the warranty?
This warranty can only be claimed with proof of purchase (or gift receipt as applicable), by either: (i) the original purchaser of the product, or (ii) the recipient of the product (in a new and unused condition) as a gift from the original purchaser of the product.

How do you exercise your rights under the Limited Warranty program?
Please complete our Warranty Claim form available at fromourplace.com/pages/warranty to submit a claim for evaluation. Proof of purchase is required for all claims, including gifted products. As part of the investigation into the claim, we may require you to submit photos, answer questions about the product and your use of the product, and/or try recommended techniques to rectify the issue first.

If your claim is approved, Our Place will either repair, replace or refund the purchase price of the product, as determined by Our Place in its sole discretion. If we require the defective item to be returned to us, we will pay for return shipping if the item is returned within the country of purchase for our non-appliance products. For appliances, you will be responsible for the costs incurred to mail the returned product to us, including any applicable accessories.

While we will strive to exchange your product for the same make, color and model as your original purchase, we cannot make any guarantees. If an Our Place product, component or product color has been discontinued at the time of repair or replacement or if Our Place determines, in its sole discretion, that such repair or replacement is not commercially practicable or cannot be timely made, Our Place reserves the right to repair or replace such product or product component with a product model or color that is similar but not exactly the same as the product or component model originally purchased. Replacement with the same color cannot be guaranteed. At its sole discretion, Our Place is entitled to replace each defective component individually, as opposed to the entire product, and some assembly may be required by you. For example, if you purchase the Wonder Oven Pro® and only one component is found defective, Our Place may, at its discretion, opt to replace either the defective component or the entire Wonder Oven Pro®. Our Place reserves the right to utilize comparable reconditioned, refurbished, repaired, or re-manufactured products or parts in the warranty repair or replacement process. Such products and parts

will be comparable in function and performance to an original product or part. The original warranty period will remain and will not restart with this replacement item, regardless of the time remaining under the original warranty period.

Disclaimer of Implied Warranties
EXCEPT AS EXPRESSLY PROVIDED HEREIN AND TO THE EXTENT PERMITTED BY LAW, THIS WARRANTY AND THE REMEDIES SET FORTH ARE EXCLUSIVE AND IN LIEU OF ALL OTHER WARRANTIES, REMEDIES AND CONDITIONS, WHETHER ORAL, WRITTEN, STATUTORY, EXPRESS OR IMPLIED. OUR PLACE DISCLAIMS ALL STATUTORY AND IMPLIED WARRANTIES INCLUDING, WITHOUT LIMITATION, WARRANTIES OF MERCHANTABILITY AND FITNESS FOR A PARTICULAR PURPOSE, WORKMANSHIP, MERCHANTABILITY, MERCHANTABLE QUALITY, DURABILITY AND WARRANTIES AGAINST HIDDEN OR LATENT DEFECTS, TO THE MAXIMUM EXTENT PERMITTED BY LAW. IN SO FAR AS SUCH WARRANTIES CANNOT BE DISCLAIMED, OUR PLACE LIMITS THE DURATION AND REMEDIES OF SUCH WARRANTIES TO THE DURATION OF THIS EXPRESS WARRANTY AND, AT OUR PLACE'S OPTION, THE REPAIR OR REPLACEMENT SERVICES DESCRIBED HEREIN. SOME STATES DO NOT ALLOW LIMITATIONS ON HOW LONG AN IMPLIED WARRANTY (OR CONDITION) MAY LAST, SO THE LIMITATION DESCRIBED ABOVE MAY NOT APPLY TO YOU.

Limitation of Liability
THE REMEDIES DESCRIBED ABOVE ARE YOUR SOLE AND EXCLUSIVE REMEDIES AND OUR PLACE'S ENTIRE LIABILITY FOR ANY BREACH OF THIS WARRANTY. This warranty gives you specific legal rights, and you may also have other rights which vary from state to state, or country to country.

OUR PLACE'S LIABILITY WILL UNDER NO CIRCUMSTANCES EXCEED THE ACTUAL AMOUNT PAID BY YOU FOR THE DEFECTIVE PRODUCT. OUR PLACE WILL NOT UNDER ANY CIRCUMSTANCES BE LIABLE FOR ANY CONSEQUENTIAL, INCIDENTAL, SPECIAL OR PUNITIVE DAMAGES OR LOSSES ARISING OUT OF OR IN CONNECTION WITH THE USE OR PERFORMANCE OF THE PRODUCTS OR DAMAGES WITH RESPECT TO ANY ECONOMIC LOSS, PERSONAL INJURY, LOSS OF PROPERTY, LOSS OF REVENUES OR PROFITS, LOSS OF ENJOYMENT OR USE, COSTS OF REMOVAL, INSTALLATION OR OTHER INDIRECT, INCIDENTAL OR CONSEQUENTIAL DAMAGES OF ANY NATURE OR KIND. Some states do not allow the exclusion or limitation of incidental or consequential damages, so the preceding limitation or exclusion may not apply to you.

Looking for an extra air fryer basket, bake pan and more? Scan this QR code for replacement parts. You can find recipes, FAQs and more there, too.

Our Place®

Need help? We're always here at
hello@fromourplace.com